THERE ARE MORE CESSNAS FLYING THAN ANY OTHER MAKE

CESSNA

# ELECTRONIC Installations

## ALL SINGLE-ENGINE MODELS (EXCEPT AGWAGON) SKYMASTER AND SUPER SKYMASTER 1963 THRU 1966

# SERVICE PARTS MANUAL

Cessna®

# AIRCRAFT COMPANY

COMMERCIAL AIRCRAFT DIVISION

Wichita, Kansas

# ELECTRONIC INSTALLATIONS AND SERVICE/PARTS MANUAL

## NOTE

This catalog describes electronic installations for all single-engine Cessna Models (except Agwagon), Skymaster, and Super Skymaster 1963 thru 1966. Refer to Electronics Parts Catalog and Electronics Manual, dated 1 May 1962, for coverage of prior single-engine models. This catalog supersedes the previous issue of this catalog dated 1 November 1964.

ORIGINAL ISSUE

**1 JAN 1966**

D382-13 — McACo — 1250 — 1-15-66

## LIST OF REVISED PAGES ISSUED

INSERT LATEST REVISED PAGES. DESTROY SUPERSEDED PAGES.

CROSS REFERENCE LISTING OF POPULAR NAME VS. MODEL NUMBERS AND SERIALS

All aircraft, regardless of manufacturer, are certificated under model number designations. However, popular names are often used for marketing purposes. To provide a consistent method of referring to the various aircraft, model numbers will be used in this publication unless names are required to differentiate between versions of the same basic model. The following table provides a cross-reference listing of popular name vs. model numbers.

| POPULAR NAME | MODEL YEAR | MODEL | SERIALS BEGINNING | SERIALS ENDING |
|---|---|---|---|---|
| 150 STANDARD,<br>150 TRAINER,<br>OR 150 INTER-CITY<br>COMMUTER | 1963<br>1964<br>1965<br>1966 | 150C<br>150D<br>150E<br>150F | 15059701<br>15060088<br>15060773<br>15061533 | 15060087<br>15060772<br>15061532 |
| FRENCH 150 | 1966 | F150F | F150-001 | |
| 172 OR SKYHAWK | 1963<br>1964<br>1965<br>1966 | 172D<br>172E<br>172F<br>172G | 17249545<br>17250573<br>17251823<br>17253393 | 17250572<br>17251822<br>17253392 |
| 172 POWERMATIC OR<br>SKYHAWK POWERMATIC | 1963 | P172D | P17257120 | P17257188 |
| FRENCH 172 | 1963<br>1964<br>1965<br>1966 | F172D<br>F172E<br>F172F<br>F172G | F172-0001<br>F172-0019<br>F172-0086<br>F172-0180 | F172-0018<br>F172-0085<br>F172-0179 |
| 180 | 1963<br>1964<br>1965<br>1966 | 180F<br>180G<br>180H<br>180H | 18051184<br>18051313<br>18051446<br>18051608 | 18051312<br>18051445<br>18051607 |
| 182 OR SKYLANE | 1963<br>1964<br>1965<br>1966 | 182F<br>182G<br>182H<br>182J | 18254424<br>18255059<br>18255845<br>18256685 | 18255058<br>18255844<br>18256684 |
| * 185 SKYWAGON | 1963<br>1964<br>1965<br>1966 | 185B<br>185C<br>185D<br>185E | 185-0513<br>185-0654<br>185-0777<br>185-0968 | 185-0653<br>185-0776<br>185-0967 |
| * 185 SKYWAGON | 1966 | A185E | 185-0968 | |

Continued on next page

* Models A185E and 185E are the same and are refered to as Model 185 in this manual.

CROSS REFERENCE LIST (Cont'd)

| POPULAR NAME | MODEL YEAR | MODEL | SERIALS BEGINNING | SERIALS ENGINE |
|---|---|---|---|---|
| 205 | 1963<br>1964 | 205<br>205A | 205-0001<br>205-0481 | 205-0480<br>205-0577 |
| SUPER SKYWAGON | 1964 | 206 | 206-0001 | 206-0275 |
| SUPER SKYWAGON (UTILITY CARGO DOOR) | 1965<br>1966 | U206<br>U206A | U206-0276<br>U206-0438 | U206-0437 |
| SUPER SKYWAGON (PASSENGER DOOR) | 1965<br>1966 | P206<br>P206A | P206-0001<br>P206-0161 | P206-0160 |
| SUPER SKYLANE | 1965<br>1966 | P206<br>P206A | P206-0001<br>P206-0161 | P206-0160 |
| TURBO-SYSTEM SUPER SKYWAGON (UTILITY CARGO DOOR) | 1966 | TU206A | TU206-0438 | |
| TURBO SYSTEM SUPER SKYWAGON (PASSENGER DOOR) | 1966 | TP206A | TP206-0161 | |
| 210 | 1963 | 210C | 21058086 | 21058220 |
| CENTURIAN | 1964<br>1965<br>1966 | 210D<br>210E<br>210F | 21058221<br>21058511<br>21058716 | 21058510<br>21058715 |
| TURBO-SYSTEM CENTURIAN | 1966 | T210F | T210-0001 | |
| SKYMASTER | 1964 | 336 | 336-0001 | 336-0195 |
| SUPER SKYMASTER | 1965<br>1966 | 337<br>337A | 337-0001<br>337-0240 | 337-0239 |

## FOREWORD

This manual provides the radio service technician with service information, illustrated parts breakdown and wiring diagrams pertaining to electronic equipment installed in Cessna single-engine aircraft, Skymaster and Super Skymaster. The catalog is separated into fourteen sections and one appendix.


| | |
|---|---|
| Section I | Aircraft Radio Corporation Equipment |
| Section II | Cessna Electronic Equipment |
| Section III | King Electronic Equipment |
| Section IV | Bendix (Formerly Motorola) Automatic Direction Finder |
| Section V | Narco Electronic Equipment |
| Section VI | Pantronics Transceiver |
| Section VII | Sunair Transceiver |
| Section VIII | Antenna Systems |
| Section IX | Audio Systems |
| Section X | Miscellaneous Electronic Equipment |
| Section XI | Electronic Loading Charts |
| Section XII | ARC F-503B Isolation Amplifier Maintenance and Parts Information |
| Section XIII | Electronic Wiring Diagrams |
| Section XIV | Numerical Index |
| Appendix I | Modifications Required for Replacement of Discontinued Radios |


The table of contents will enable the readers to find the information necessary to check wiring installations and parts required for any particular radio.

STANDARD PARTS.

Many parts having standard usage have been incorporated into the Cessna Standard System. Parts in this group are designated with the part number prefix "S-".

For standard hardware items such as Tinnerman nuts, clamps, etc., "AN" and "NAS" numbers have been used.

USABLE ON CODES....Serial listings in this catalog are noted by a letter code located in the usable on code column which is the extreme right hand column of the parts list page. Usable on codes are applicable only to the figure on which they appear. The code letters and the serials to which they apply are listed at the end of the figure.

If no usable on code appears opposite a first column listing of the figure, the usage is applicable to all models and serials covered by this catalog. If no usable on code appears opposite any indented listing, the usage is applicable to all models and serials covered by the figure on which it appears.

NON-INTERCHANGEABLE PARTS....When parts are not interchangeable with earlier models, all parts applicable to the particular usage are listed. The letter code for the individual part usage is listed in the usable on column opposite each part. Care should be exercised in determining proper serial when ordering to insure receipt of correct part.

INTERCHANGEABLE PARTS....When a later design part is completely interchangeable with the part it replaces, both parts will be serialized and the notation "when exhausted use ___" will be entered following the listing of the earlier design part. This means that the earlier design part should be used on airplanes to which they apply until the supply of these parts is exhausted---after which time the later design part must be used. This is done to simplify stocking of parts by our distributors and dealers. The earlier part is as good, physically and functionally, as the later design part---the difference being the later design part can be used on more than one block of airplane serials.

SYMBOLS & PART NUMBER TERMS.

NP - The symbol "NP" appearing in the units per assembly column denotes that the item it appears opposite is not procurable.

AR - The symbol "AR" appearing in the units per assembly column denotes "As Required" and is used to indicate bulk quantity where an indefinite amount is used.

ALT - The symbol "ALT" following the nomenclature of an item is used to denote an alternate part.

LH & RH - The symbols either LH or RH are used following the part nomenclature to denote either left hand or right hand parts.

Other key letter symbols spaced apart from and following the part nomenclature are for cataloging and manufacturing purposes only and are not to be considered by the customer.

A blank entry in the part number column appears before an unprocurable part or installation which is also denoted in the "Units Per Assembly" column by the use of the symbol NP.

GROUP ASSEMBLY PARTS LIST ARRANGEMENT.

This section lists all replaceable items in the airplane and these items are detailed on illustrations throughout the section. The index numbers on the illustration are keyed to each accompanying parts list. The purpose of the index numbers is to provide complete and positive identification of the article, but should not be used for procurement purposes.

a. The figure and index number column of the parts list shows the figure number once at the beginning of the list. The figure number is followed by a dash and the indexed number. The remaining index numbers are preceded by dash only.

b. The part number column identifies the item by part number.

c. In the description column, relationship of items covered is shown by the degree of indention of each item, for example: The wing assembly (Figure 1) is listed in column (1) of the description column. The wing structure, is the next lower assembly and is therefore listed in column (2).

d. If two or more assemblies contain a majority of identical parts or the assemblies are left or right hand, the assemblies are listed together and the next lower assemblies or detail parts are listed as common for both assemblies, with the differing parts coded for usage on the correct major assembly.

e. Attaching parts are listed immediately beneath the item to be attached and preceding any detail parts of the item. They are listed in the same column as the item they attach and are preceded by the caption "Attaching Parts." The end of the attaching parts listing is followed by a separating symbol ---*---.

f. The quantity listed in the "Units Per Assembly" column for attaching parts denotes the quantity necessary to attach only one part. Total quantity necessary to attach only one part. Total quantity necessary to attach more than one part is obtained by multiplying the attaching parts quantity by the number of parts attached.

g. Component parts of the complete airplane which are not included in any assembly, but which are used in conjunction with, or attach to certain assemblies, are listed either preceding the first detail or following the last detail of the assembly or installation, and in the same column as the major assembly or installation.

h. The quantities listed in the "Units Per Assembly" column are the quantity used per figure.

ACCESSORY KITS.

Accessory kits (AK Kits) available for field installation appear in this catalog.

This catalog describes the factory installation of the equivalent field installation AK Kit and the factory installation is considered standard and illustrated as such.

For information regarding peculiarities of field installation kits consult the applicable AK Kit installation instructions.

BULK ITEMS.

Certain items such as coaxial cable, antenna wire, clamps and ect., are noted in the catalog listings as bulk items. When an item is listed as a bulk item, it will be supplied to the dealer in the most convenient bulk length or quantity. Reference to the cut length or quantity per installation provides for the most satisfactory disbursement to the customer.

HOW TO ORDER.

USE YOUR CATALOG TO ORDER PARTS. Use parts and Accessories Order Form Number P-101A, P-102, or P-103, whichever applies and which will be supplies by Cessna on request. Give complete information on addresses and make sure the part number and part name are as shown in the catalog. Be sure to specify quantities. Specify how the order is to be shipped, otherwise it will be sent out in the manner that seems best to the shipper.

SERIAL, COLOR, & CORROSION PROOFING.

Be sure to indicate model and serial number of the airplane. Serial number is very important to properly identify parts used on each airplane, when color is involved. Be sure to specify what color. If corrosion proofing is desired add the letters "CP" following the part number.

DISTRIBUTION ORDERS.

Distribution will send all orders to the factory with instructions as to the shipping destination. The factory prefers not to make C.O.D. shipments for the distributor and all billing will be made to the distributor in the case of direct shipments.

DEALER ORDERS.

Dealers will place all of their parts order requirements with their distributor. The factory will not honor orders received directly from a dealer. It will be necessary for us to forward it to the distributor for his action. Therefore, dealer orders sent direct to the distributor will result in much faster delivery on any parts that are required.

RETAIL ORDERS.

Retail orders will not be honored by the factory. They are to be placed with the dealer or distributor in the owner's territory and when received directly by the factory will be forwarded to the distributor from whose territory it was received. Considerable saving in time will result to the owner if his orders are placed with his dealer or distributor.

Cessna Aircraft Company reserves the right to cancel, add or change the parts and assemblies described in this catalog without notice.

TABLE OF CONTENTS

SECTION I - AIRCRAFT RADIO CORPORATION EQUIPMENT


| Figure | Equipment | Page |
|---|---|---|
| 1-1 | 302A Starflite II, Com Radio Installation | 1-2 |
| 1-2 | 317A Starflite II, Nav/Com Radio Installation | 1-7 |
| 1-3 | 318A Starflite II, Radio Installation | 1-14 |
| 1-4 | 319A Starflite II, Nav Radio Installation | 1-20 |


SECTION II - CESSNA ELECTRONIC EQUIPMENT


| Figure | Equipment | Page |
|---|---|---|
| 2-1 | Cessna ADF 300 Radio Installation (Type 521A) | 2-2 |
| 2-2 | Cessna Nav/Com 300 Radio Installation (Type 513A) | 2-10 |
| 2-3 | Cessna Nav-O-Matic 200 Installation (Model 150 Only) | 2-20 |
| 2-3A | Cessna Nav-O-Matic 200 & 300 Installations (Models 172 & P172) | 2-23 |
| 2-3B | Cessna Nav-O-Matic 200 & 300 Installations (Models 180 & 185) | 2-26 |
| 2-3C | Cessna Nav-O-Matic 200 & 300 Installations (Models 182, 205 & 210) | 2-29 |
| 2-3D | Cessna Nav-O-Matic 200 & 300 Installations (Models 206, P206, U206, TP206, TU206, 210, & T210) | 2-32 |
| 2-3E | Cessna Nav-O-Matic 200 & 300 Installations (Models 336 & 337) | 2-35 |
| 2-4 | Cessna Transceiver 500 Radio Installation (Type 302A) | 2-38 |
| 2-5 | Cessna Nav/Com 500 Radio Installation (Type 317A) | 2-46 |
| 2-6 | Cessna ADF 500 Radio Installation (Type 318A - Rotatable Loop) | 2-56 |
| 2-7 | Cessna Nav/Omni 500 Radio Installation (Type 319A) | 2-65 |
| 2-8 | Cessna 1 1/2 Nav/Com 300 or 300R Radio Installation (Type 514A, 516A, 514R, or 515R) | 2-74 |
| 2-9 | Cessna Marker Beacon 300 (Type R-502B) | 2-85 |
| 2-10 | Cessna ADF 300 Radio Installation (Type 521B) | 2-94 |
| 2-11 | Cessna Transceiver 300 Radio Installation (Type 524A) | 2-101 |
| 2-12 | Cessna Nav/Omni 300 (Type 525A) | 2-109 |
| 2-13 | Cessna Nav-O-Matic 400 Installation (Model 172 Only) | 2-119 |
| 2-14 | Cessna Nav-O-Matic 400 Installation (Models 180 & 185 Only) | 2-122 |
| 2-15 | Cessna Nav-O-Matic 400 Installation (Model 182 Only) | 2-125 |
| 2-16 | Cessna Nav-O-Matic 400 Installation (Models P206, TP206, U206, & TU206 Only) | 2-128 |
| 2-17 | Cessna Nav-O-Matic 400 Installation (Models 210 & T210 Only) | 2-131 |
| 2-18 | Cessna Nav-O-Matic 400 Installation (Model 337 Only) | 2-134 |
| 2-19 | Cessna ADF 500 Radio Installation (Type 318G - Fixed Loop) | 2-137 |


SECTION III -- KING ELECTRONIC EQUIPMENT


| Figure | Equipment | Page |
|---|---|---|
| 3-1 | KY-90 or KY-95 Radio Installation | 3-2 |
| 3-2 | KX-100 or KX-120 Radio Installation (See Figure 3-5 for Model 336) | 3-12 |
| 3-3 | KX-150 Radio Installation | 3-20 |
| 3-4 | KR-20 Marker Beacon Receiver Installation | 3-29 |
| 3-5 | KX-120 or KX-130 Radio Installations (336 Only) | 3-31 |
| 3-6 | KX-160 Radio Installation | 3-36 |
| 3-7 | KN-60 DME Installation | 3-45 |

TABLE OF CONTENTS (CONT'D)

SECTION IV - BENDIX (FORMERLY MOTOROLA) AUTOMATIC DIRECTION FINDER

| Figure | Equipment | Page |
|---|---|---|
| 4-1 | ADF-T12 Automatic Direction Finder | 4-2 |

SECTION V - NARCO RADIO EQUIPMENT

| Figure | Equipment | Page |
|---|---|---|
| 5-1 | Mark II Omnigator Radio Installation | 5-2 |
| 5-2 | Mark IV Superhomer Radio Installation | 5-11 |
| 5-3 | Mark V Radio Installation | 5-15 |
| 5-4 | Mark X Radio Installation | 5-25 |
| 5-5 | MBT-12 Marker Beacon Receiver Installation | 5-34 |
| 5-6 | UDI-12 DME Installation | 5-38 |
| 5-7 | (UGR-1) Glide Slope Receiver Installation | 5-44 |
| 5-8 | Mark XII With VOA-4, VOA-5, or VOA-6 Radio Installations | 5-53 |
| 5-9 | Mark VII Radio Installation | 5-64 |

SECTION VI - PANTRONICS TRANSCEIVER

| Figure | Equipment | Page |
|---|---|---|
| 6-1 | Pantronics (Type DX10-D) Radio Installation - Reel & Fixed Antenna - Model 182 Only | 6-2 |
| 6-2 | Pantronics (Type DX10-D) Radio Installation - Fixed Antenna - Model 182 Only | 6-6 |
| 6-3 | Pantronics (Type DX10-D) Radio Installation - Reel & Fixed Antenna - Models 205, 206, P206, & U206 Only | 6-8 |
| 6-4 | Pantronics (Type DX10-D) Radio Installation - Fixed Antenna Model 205, 206, P206, & U206 Only | 6-12 |
| 6-5 | Pantronics (Type DX10-D) Radio Installation - Reel & Fixed Antenna - Model 210 Only | 6-14 |
| 6-6 | Pantronics (Type DX10-D) Radio Installation - Fixed Antenna - Model 210 Only | 6-18 |
| 6-7 | Pantronics (Type DX10-DA) Radio Installation - Reel & Fixed Antenna - Model 172 Only | 6-20 |
| 6-8 | Pantronics (Type DX10-DA) Radio Installation - Reel & Fixed Antenna - Models 180 & 185 Only | 6-24 |
| 6-9 | Pantronics (Type DX10-DA) Radio Installation - Reel & Fixed Antenna - Model 182 Only | 6-28 |
| 6-10 | Pantronics (Type DX10-DA) Radio Installation - Reel & Fixed Antenna - Models P206, TP206, U206, & TU206 Only | 6-32 |
| 6-11 | Pantronics (Type DX10-DA) Radio Installation - Reel & Fixed Antenna - Models 210 & T210 Only | 6-36 |
| 6-12 | Pantronics (Type DX10-DA) Radio Installation - Fixed Antenna - Model 337 Only | 6-40 |

SECTION VII - SUNAIR TRANSCEIVER

| Figure | Equipment | Page |
|---|---|---|
| 7-1 | T-5-DA MF & HF Transceiver - Models 180 & 185 Only | 7-2 |
| 7-2 | T-5-DA MF & HF Transceiver - Model 182 Only | 7-5 |
| 7-3 | T-5-DA MF & HF Transceiver - Models 205, 206, P206, & U206 Only | 7-9 |
| 7-4 | T-5-DA MF & HF Transceiver - Model 210 Only | 7-13 |
| 7-5 | T-5RA or T-10R MF & HF Transceiver - Model 336 Only | 7-17 |

TABLE OF CONTENTS (CONT'D)

SECTION VIII - ANTENNA SYSTEMS

| Figure | Equipment | Page |
|---|---|---|
| 8-1 | VHF Transmitting Antennas | 8-2 |
| 8-2 | VHF Omni Receiving Antennas | 8-4 |
| 8-3 | UHF Glide Slope Antennas | 8-10 |
| 8-4 | Marker Beacon Antenna Installations | 8-12 |
| 8-5 | Medium & High Frequency Fixed Wire Antennas | 8-14 |
| 8-6 | ADF Sense Antennas | 8-17 |

SECTION IX - AUDIO SYSTEMS

| Figure | Equipment | Page |
|---|---|---|
| 9-1 | Audio Isolation Amplifier & Selector Switches | 9-2 |
| 9-2 | Not Used | |
| 9-3 | Speaker Installations | 9-15 |
| 9-4 | Microphone Installations | 9-19 |
| 9-5 | Headset Installation | 9-26 |

SECTION X - MISCELLANEOUS ELECTRONIC EQUIPMENT

| Figure | Equipment | Page |
|---|---|---|
| 10-1 | Radio Cooling Installations | 10-2 |
| 10-2 | Rheostat Chart for Standard Flood Light Dimming | 10-12 |
| 10-3 | Dropping Resistor Chart for Optional Post Lighting | 10-13 |
| 10-4 | Available Accessory Kits List (Deleted - See Accessory Kits Catalog) | |
| 10-5 | Radio Noise Filter Installations | 10-14 |

SECTION XI - ELECTRONIC LOADING CHARTS

| Figure | Equipment | Page |
|---|---|---|
| 11-1 | Model 150 - 1963 Models Only | 11-2 |
| 11-1 | Model 150 - 1964 Models thru 1965 | 11-3 |
| 11-1 | Model 150 - 1966 Models and On | 11-4 |
| 11-2 | Models 172 & P172 - 1963 Models Only | 11-5 |
| 11-2 | Model 172 - 1964 Models and On | 11-6 |
| 11-3 | Models 180 & 185 | 11-8 |
| 11-4 | Model 182 - Standard Locations | 11-10 |
| 11-5 | Model 182 - Auxiliary Locations | 11-12 |
| 11-6 | Models 205, 206, P206, U206, TP206 & TU206 - Auxiliary Locations | 11-13 |
| 11-7 | Model 210 - 1963 Models Only | 11-14 |
| 11-7 | Model 210 - 1964 Models and On | 11-15 |
| 11-8 | Model 336 - Auxiliary Locations | 11-18 |

NOTE: For standard locations of radio equipment in 205, 206, P206, U206, TP206, TU206, 336, and 337 aircraft, refer to applicable radio installations.

SECTION XII - ARC F503B ISOLATION AMPLIFIER MAINTENANCE AND PARTS INFORMATION 12-1

TABLE OF CONTENTS (CONT'D)

SECTION XIII - ELECTRONIC WIRING DIAGRAMS 13-1

SECTION XIV - NUMERICAL INDEX 14-1

APPENDIX I - MODIFICATION REQUIRED FOR REPLACEMENT OF DISCONTINUED RADIOS

| Figure | Equipment | Page |
|---|---|---|
| 1 | Replacement of the DV-317A-1 Dynaverter with the DV-317B-1 Dynaverter | 2 |
| 2 | Replacement of the DV-319A Dynaverter with the DV-319B Dynaverter | 3 |
| 3 | Replacement of DV-302A Dynaverter with the DV-302B Dynaverter | 4 |

# SECTION I

## AIRCRAFT RADIO CORPORATION ELECTRONIC EQUIPMENT

TABLE OF CONTENTS


| Figure | | Page |
|---|---|---|
| 1-1 | ARC 302A Starflite II, Com Radio Installation | 1-2 |
| 1-2 | ARC 317A Starflite II, Nav/Com Radio Installation | 1-7 |
| 1-3 | ARC 318A Starflite II, Radio Installation | 1-14 |
| 1-4 | ARC 319A Starflite II, Nav Radio Installation | 1-20 |

ARC 302A STARFLITE II COM INSTALLATION

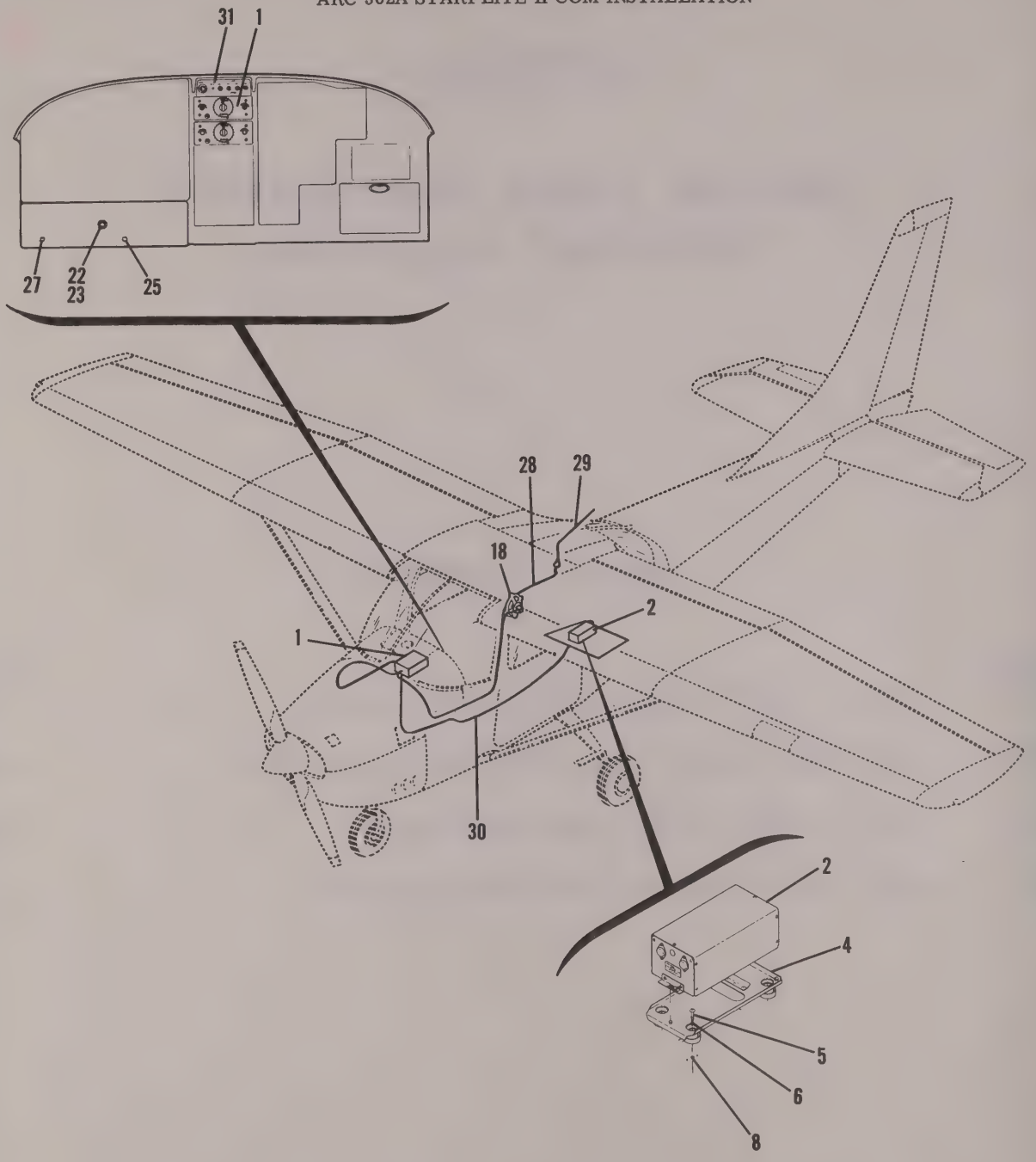


## 182 - 1963 MODELS ONLY

Figure 1-1. ARC 302A Starflite II Com Radio Installation - (Sheet 1 of 4)

ARC 302A STARFLITE II COM INSTALLATION

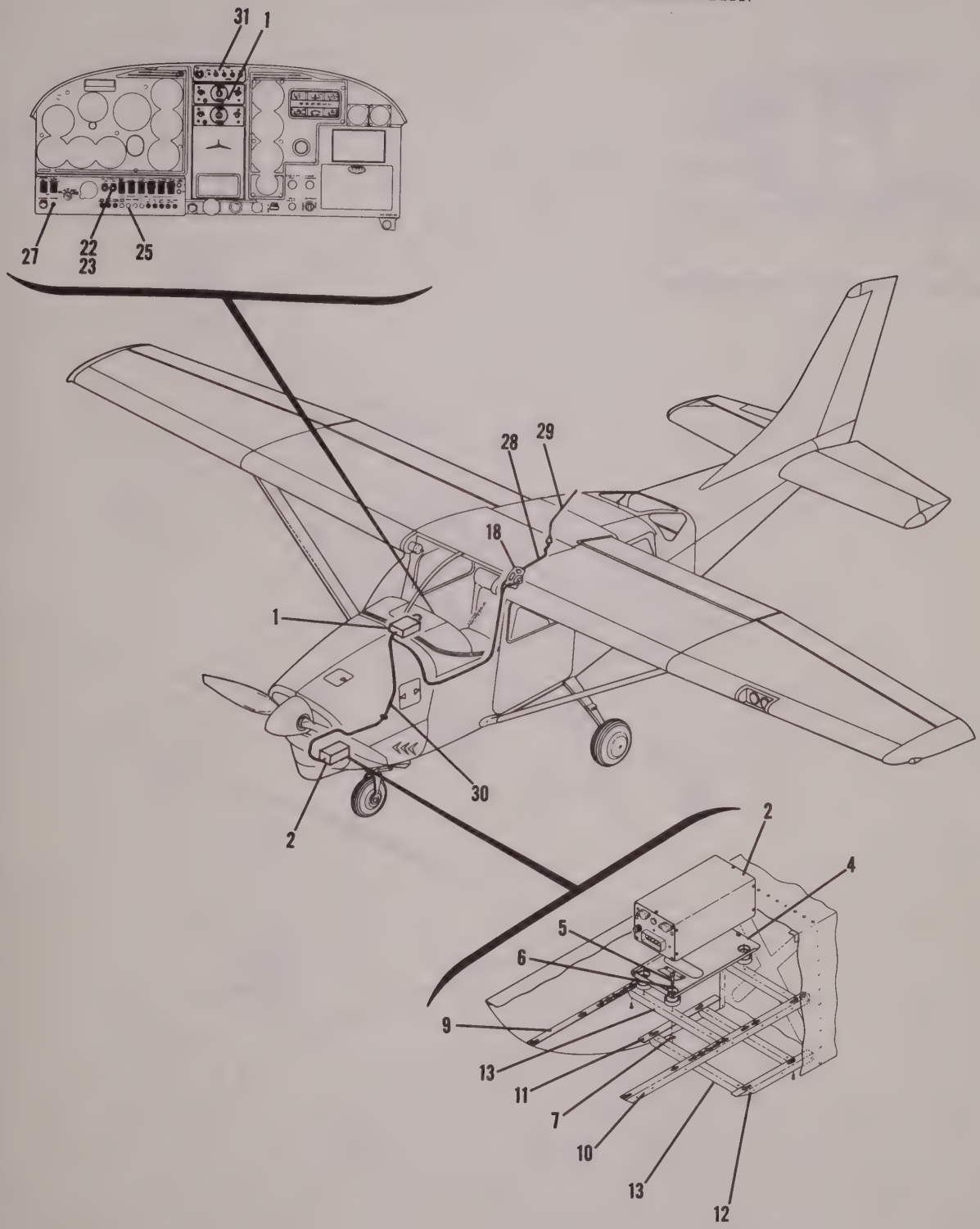


## 205 - 1963 MODELS ONLY

Figure 1-1. ARC 302A Starflite II Com Radio Installation - (Sheet 2 of 4)

ARC 302A STARFLITE II COM INSTALLATION

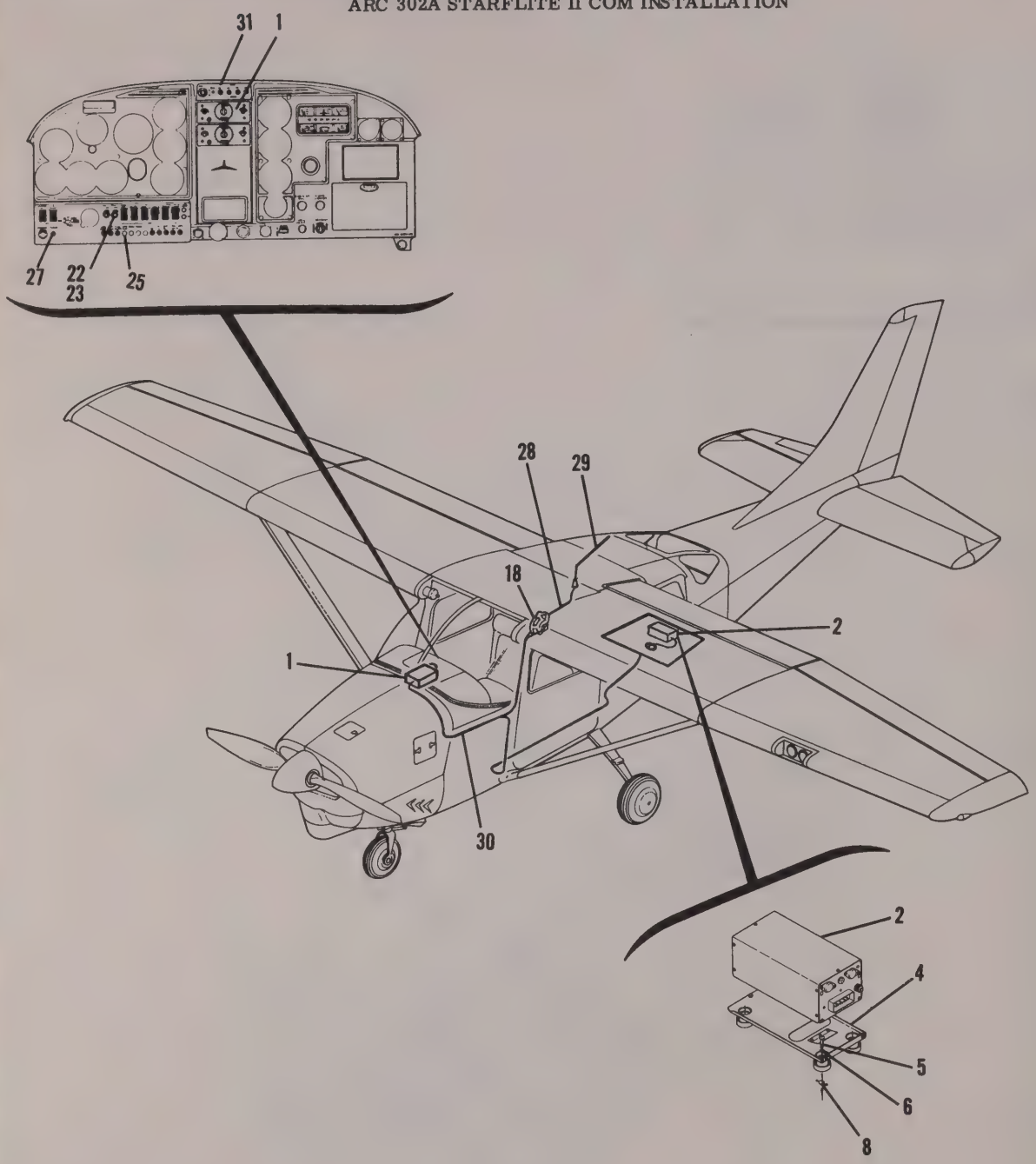


## 210 - 1963 MODELS ONLY

Figure 1-1. ARC 302A Starflite II Com Radio Installation - (Sheet 3 of 4)

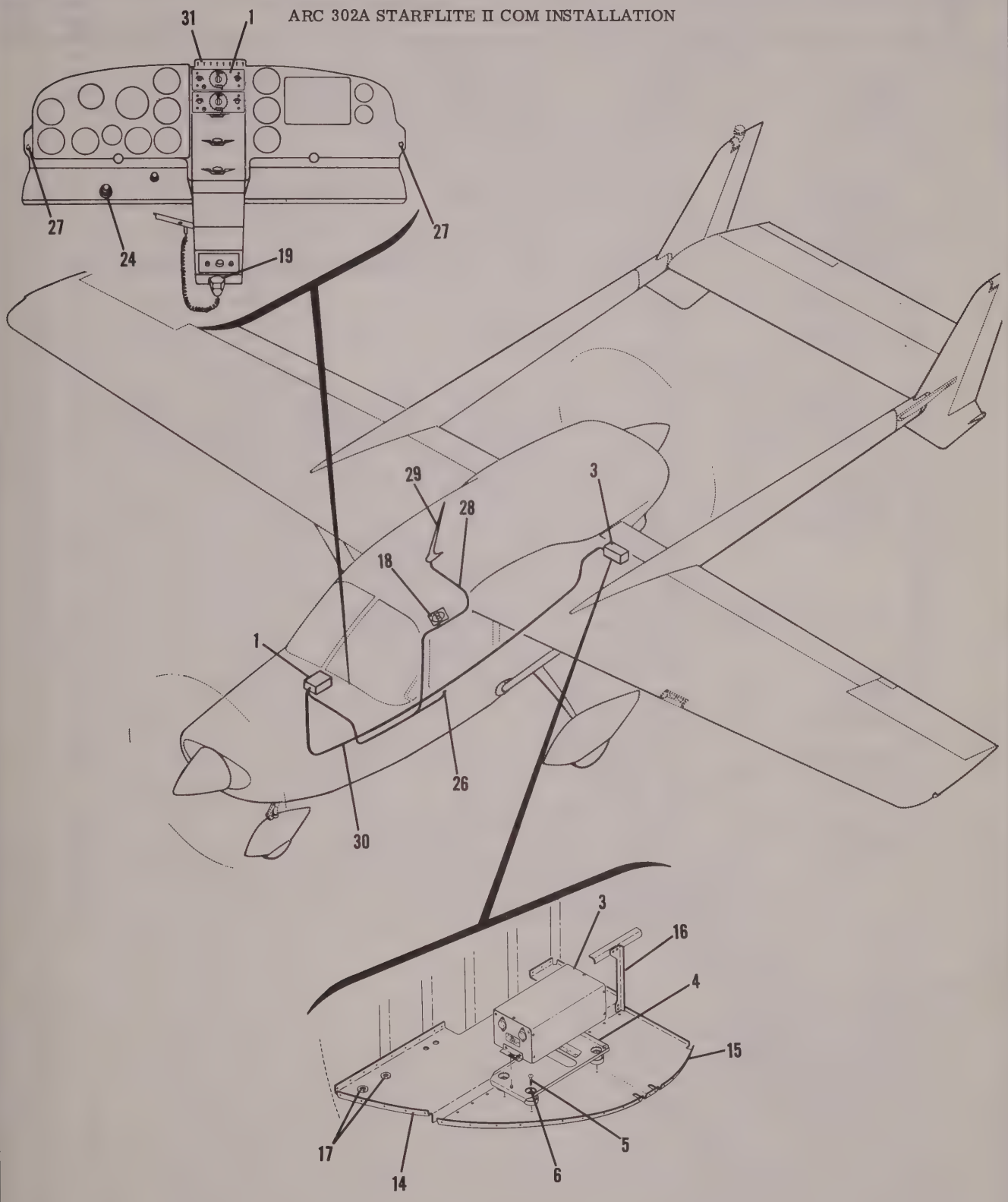


## 336 - EARLY 1964 MODELS ONLY

Figure 1-1. ARC 302A Starflite II Com Radio Installation - (Sheet 4 of 4)

| FIGURE AND INDEX NO. | PART NUMBER | DESCRIPTION<br>1 2 3 4 5 6 7 | UNITS PER ASSY | USABLE ON CODE |
|---|---|---|---|---|
| 1-1- | | ARC STARFLITE II 302A COMM INSTL | NP | |
| - 1 | 28410 | TRANSCEIVER 14 & 28 VOLT | 1 | |
| | 27591 | MOUNTING SINGLE-NON SHOCK-TYPE M-303A | A/R | |
| | 27594 | MOUNTING DUAL-NON SHOCK-TYPE M-304A | A/R | |
| | 26780 | MOUNTING SINGLE SHOCK FOR TSO-TYPE M-301A | A/R | |
| | 26790 | MOUNTING DUAL SHOCK FOR TSO-TYPE M-302A | A/R | |
| | | ATTACHING PARTS | | |
| | S1021Z6-8 | SCREW- 6 REQD FOR DUAL MOUNT ALL EXCEPT 336 | 4 | |
| | NAS446-2-3 | NUT- 6 REQD FOR DUAL MOUNT ALL EXCEPT 336 | 4 | |
| | AN515-6R8 | SCREW-6 REQD FOR DUAL MOUNT 336 ONLY | 4 | |
| | | ---*--- | | |
| - 2 | 28420-0014 | DYNAVETER-14 VOLT-TYPE DV-302A | 1 | |
| - 3 | 28420-0028 | DYNAVERTER-28 VOLT-TYPE DV-302A | 1 | |
| - 4 | 24900 | MOUNTING | 1 | |
| | | ATTACHING PARTS | | |
| - 5 | AN515-8R16 | SCREW | 4 | |
| - 6 | AN936A8 | WASHER | 4 | |
| - 7 | MS20365-832C | NUT 205-206 & 336 | 4 | |
| - 8 | A8K75 | RIVNUT 182 & 210 | | |
| | | ---*--- | | |
| - 9 | 1270627-85 | SIDE ANGLE ASSY LH SIDE-STD EQUIP 208 & 206 | REF | |
| - 10 | 1270627-86 | SIDE ANGLE ASSY RH SIDE-STD EQUIP 205 & 206 | REF | |
| - 11 | 1270627-29 | SIDE ANGLE ASSY LH SIDE-OPTIONAL LOWER LOCATION 505 & 206- | A/R | |
| - 12 | 1270627-30 | SIDE ANGLE ASSY RH SIDE-OPTIONAL LOWER LOCATION 205 & 206- | A/R | |
| - 13 | 1270627-70 | ATTACH ANGLE USED FOR STD OR OPT LOCATIONS 205 & 206- | 2 | |
| | | AUX RADIO SHELF-AFT LOCATION 336 ONLY | NP | |
| - 14 | 1470078-2 | SHELF-UPPER FWD PART OF SHELF | 1 | |
| - 15 | 1470078-3 | SHELF-LOWER AFT PART OF SHELF | 1 | |
| - 16 | 1470078-4 | POST | 1 | |
| - 17 | MS35489-11S | GROMMET | 2 | |
| - 18 | | SPEAKER INSTALLATION SEE FIG 9-3 | 1 | |
| - 19 | | MICROPHONE INSTALLATION SEE FIG 9-4 | 1 | |
| - 20 | | NOT USED | 1 | |
| - 21 | | NOT USED | 1 | |
| - 22 | R-12 1/2-75-RS34 | RHEOSTAT ALL EXCEPT 336 | 1 | |
| - 23 | S1163-2 | KNOB-RHEOSTAT ALL EXCEPT 336 | 1 | |
| - 24 | | DROPPING RESISTOR-FLT INST & RADIO DIAL LT | 1 | |
| | | SEE FIGURE 10-2 336 ONLY | | |
| - 25 | S1360-10 | CIRCUIT BREAKER ALL EXCEPT 336 | 1 | |
| - 26 | S1360-5 | CIRCUIT BREAKER 336 ONLY | 1 | |
| - 27 | S1103-1 | PHONE JACK | 1 | |
| | 0770039-1 | HEADSET | 1 | |
| - 28 | | CABLE ASSY-COAXIAL TRANSCEIVER TO VHF ANT | NP | |
| | RG-58A/U | CABLE-COAXIAL BULK ITEM | A/R | |
| | UG-913/U | PLUG-COAXIAL RT ANGLE | 1 | |
| | UG-88C/U | PLUG-COAXIAL | 1 | |
| - 29 | | VHF ANTENNA INSTALLATION-SEE FIG 8-1 | NP | |
| - 30 | | CABLE ASSY-TRANSCEIVER TO DYNAVERTER | NP | |
| | 28808 | PLUG- 20 PIN | 2 | |
| | 126-217 | PLUG- 5 PIN-CONNECTS TO DYNAVERTER | 1 | |
| - 31 | | TRANSMITTER SELECTOR SWITCH SEE FIG 9-1 | A/R | |
| | | RADIO COOLING INSTALLATION-USED WITH MORE THAN | A/R | |
| | | ONE RADIO-SEE FIG 10-1 | | |
| | | RADIO NOISE FILTERS-SEE FIG 10-5 | A/R | |

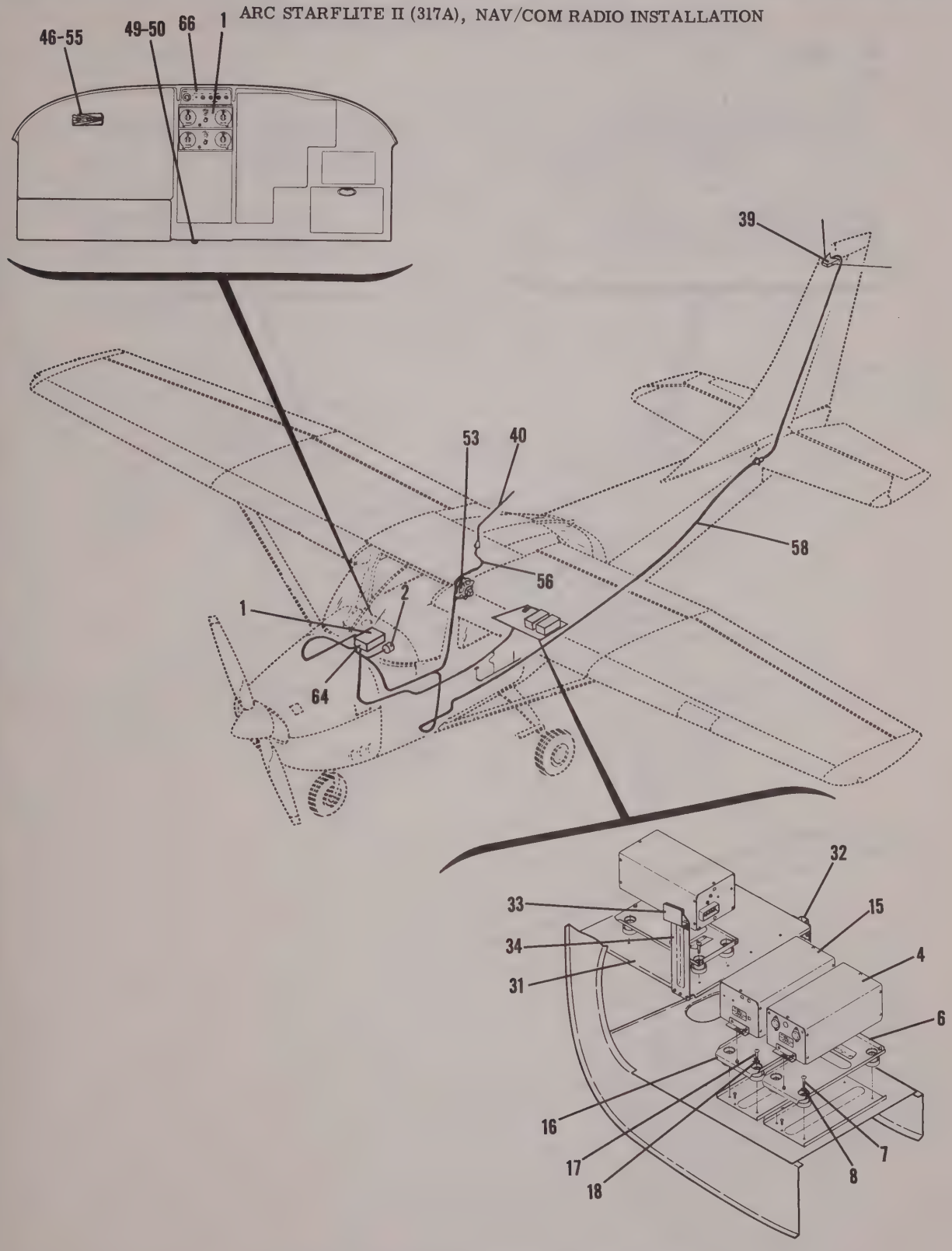


## 182 - 1963 MODELS ONLY

Figure 1-2. ARC Starflite II (317A), Nav/Com Radio Installation (Sheet 1 of 4)

ARC STARFLITE II (317A), NAV/COM RADIO INSTALLATION

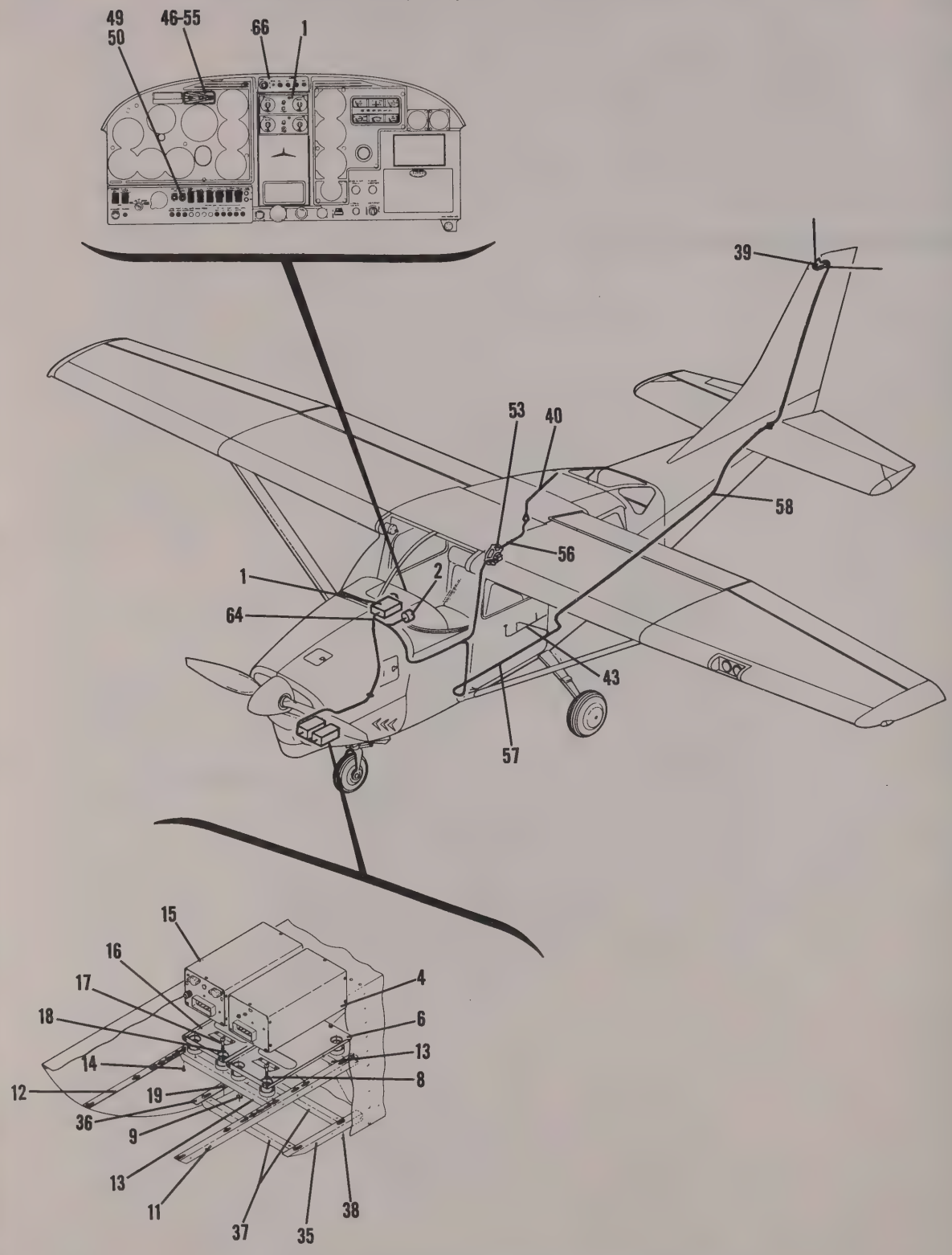


205 - 1963 MODELS ONLY

Figure 1-2. ARC Starflite II (317A), Nav/Com Radio Installation (Sheet 2 of 4)

ARC STARFLITE II (317A), NAV/COM RADIO INSTALLATION

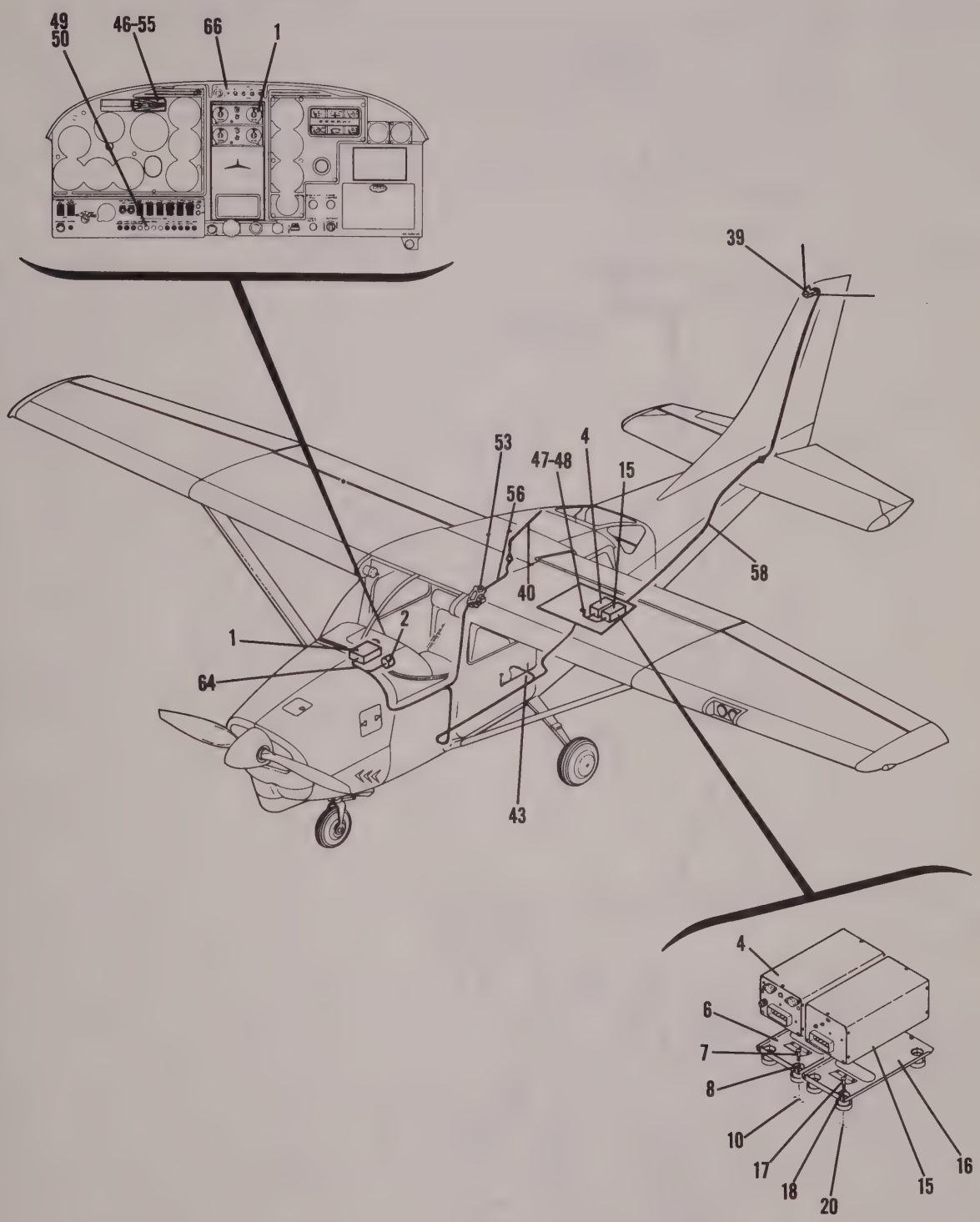


## 210 - 1963 MODELS ONLY

Figure 1-2. ARC Starflite II (317A), Nav/Com Radio Installation (Sheet 3 of 4)

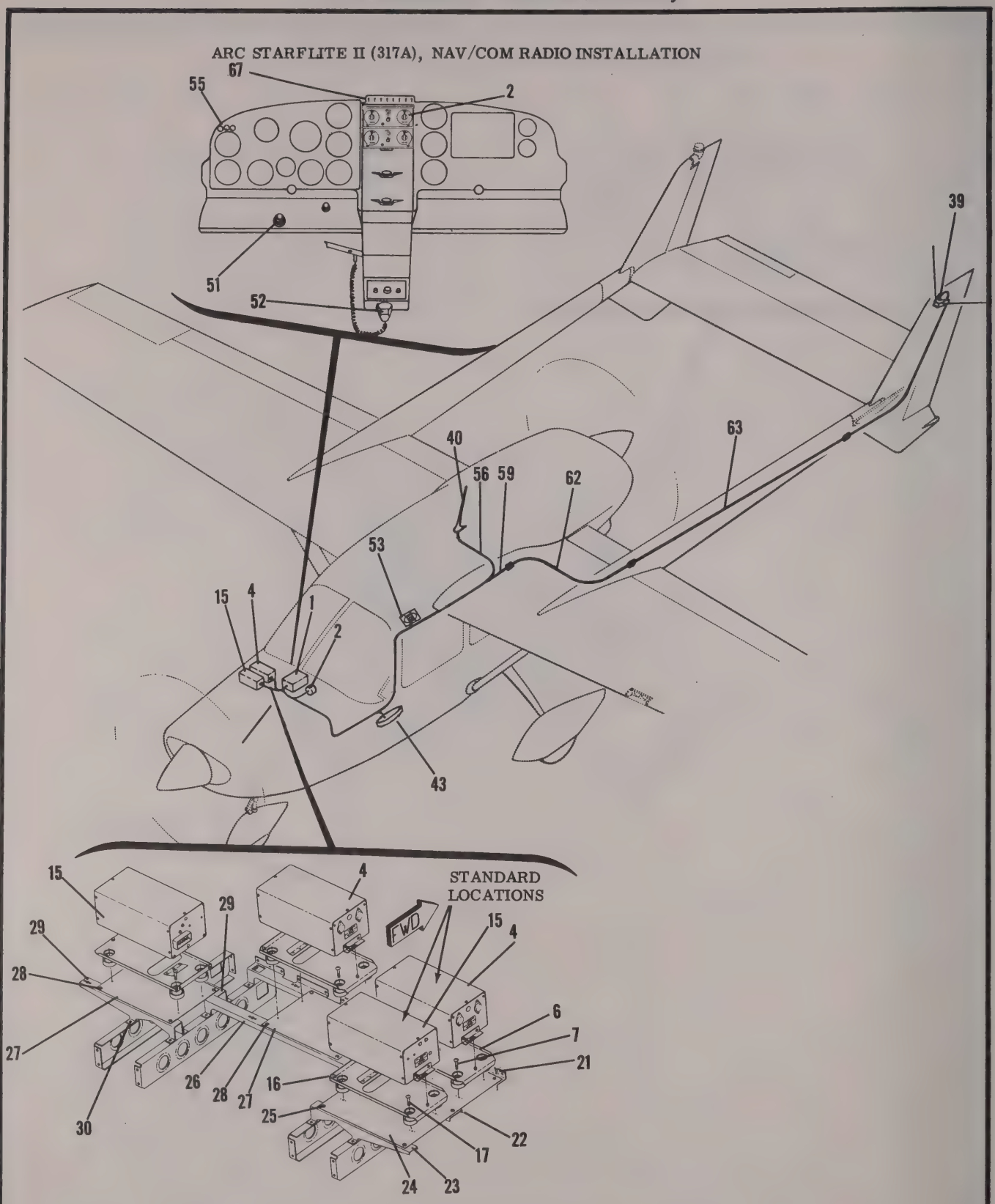


## 336 - EARLY 1964 MODELS ONLY

Figure 1-2. ARC Starflite II (317A), Nav/Com Radio Installation (Sheet 4 of 4)

| FIGURE AND INDEX NO. | PART NUMBER | DESCRIPTION<br>1 2 3 4 5 6 7 | UNITS PER ASSY | USABLE ON CODE |
|---|---|---|---|---|
| 1-2- | | ARC STARLITE II - NAV/COM - TYPE 317A---------- | NP | |
| - 1 | 24650 | RECEIVER-TRANSMITTER 14 & 28 VOLT---------- | 1 | |
| | 27591 | MOUNTING SINGLE NON SHOCK- TYPE M-303A---------- | A/R | |
| | 27594 | MOUNTING DUAL NON SHOCK- TYPE M-304A---------- | A/R | |
| | 26780 | MOUNTING SINGLE SHOCK FOR TSO- TYPE M-301A---------- | A/R | |
| | 26790 | MOUNTING DUAL SHOCK FOR TSO- TYPE M-302A---------- | A/R | |
| | | ATTACHING PARTS | | |
| | S1021Z6-8 | SCREW- 6 REQD FOR DUAL MOUNT ALL EXCEPT 336---------- | 4 | |
| | NAS446-2-3 | NUT- 6 REQD FOR DUAL MOUNT ALL EXCEPT 336---------- | 4 | |
| | AN515-6R8 | SCREW- 6 REQD FOR DUAL MOUNT 336 ONLY---------- | 4 | |
| | | ---*--- | | |
| - 2 | 27490 | INDICATOR---------- | 1 | |
| | | ATTACHING PARTS | | |
| | AN507B632R12 | SCREW---------- | 3 | |
| | NAS446-2-3 | NUT ---------- | 3 | |
| | | ---*--- | | |
| - 3 | 28490-0014 | DYNAVERTER- 14 VOLT- TYPE DV-317A-1---------- | 1 | |
| - 4 | 28490-0028 | DYNAVERTER- 28 VOLT- TYPE DV-317A-1---------- | 1 | |
| - 5 | | NOT USED | | |
| - 6 | 24900 | MOUNTING- TYPE M-335A---------- | 1 | |
| | | ATTACHING PARTS | | |
| - 7 | AN515-8R16 | SCREW---------- | 4 | |
| - 8 | AN936A8 | WASHER---------- | 4 | |
| - 9 | MS20365-832C | NUT 205 & 336---------- | 4 | |
| - 10 | A8K75 | RIVNUT 182 & 210---------- | 4 | |
| | | ---*--- | | |
| - 11 | 1270627-85 | SIDE ANGLE ASSY LH SIDE-STD EQUIP 205---------- | REF | |
| - 12 | 1270627-86 | SIDE ANGLE ASSY RH SIDE-STD EQUIP 205---------- | REF | |
| - 13 | 1270627-69 | ATTACH ANGLE- 205---------- | 2 | |
| | | ATTACHING PARTS | | |
| - 14 | AN520-10R6 | SCREW---------- | 4 | |
| | | ---*--- | | |
| - 15 | 24660 | CONVERTER- TYPE B-317A---------- | 1 | |
| - 16 | 24900 | MOUNTING- TYPE M-335A---------- | 1 | |
| | | ATTACHING PARTS | | |
| - 17 | AN515-8R16 | SCREW---------- | 4 | |
| - 18 | AN936A8 | WASHER---------- | 4 | |
| - 19 | MS20365-832C | NUT 205---------- | 4 | |
| - 20 | A8K75 | RIVNUT 182 & 210---------- | 4 | |
| | | ---*--- | | |
| - 21 | 1470056-1 | SUPPORT ASSY 336 ONLY---------- | 1 | |
| | | ATTACHING PARTS | | |
| | AN515-8R8 | SCREW---------- | 5 | |
| | AN960-8 | WASHER---------- | 5 | |
| | MS20365-932C | NUT ---------- | 5 | |
| | | ---*--- | | |
| - 22 | 1470056-4 | SUPPORT ASSY 336 ONLY---------- | 1 | |
| | | ATTACHING PARTS | | |
| | AN515-8R8 | SCREW---------- | 4 | |
| | AN960-8 | WASHER---------- | 4 | |
| | MS20365-832C | NUT ---------- | 1 | |
| | | ---*--- | | |
| - 23 | 1470056-7 | SUPPORT ASSY 336 ONLY---------- | 1 | |
| | | ATTACHING PARTS | | |
| | AN515-8R8 | SCREW---------- | 4 | |
| | AN960-8 | WASHER---------- | 4 | |
| | MS20365-832C | NUT ---------- | 4 | |
| | | ---*--- | | |
| - 24 | 1470097-1 | PLATE ASSY 336 ONLY---------- | 1 | |
| | | ATTACHING PARTS | | |
| - 25 | AN515-10R6 | SCREW---------- | 6 | |
| | | ---*--- | | |

CONTINUED ON NEXT PAGE

| FIGURE AND INDEX NO. | PART NUMBER | DESCRIPTION<br>1 2 3 4 5 6 7 | UNITS PER ASSY | USABLE ON CODE |
|---|---|---|---|---|
| 1-2- 26 | 1470056-13 | SUPPORT ASSY-ALT LOCATION 336 ONLY | 1 | |
| | | ATTACHING PARTS | | |
| | AN515-8R8 | SCREW | 4 | |
| | AN960-8 | WASHER | 4 | |
| | MS20365-832C | NUT | 4 | |
| | | ---*--- | | |
| - 27 | 1470098-1 | PLATE ASSY-ALT LOCATION 336 ONLY | 2 | |
| | | ATTACHING PARTS | | |
| - 28 | AN515-8R8 | SCREW | 8 | |
| | | ---*--- | | |
| - 29 | 1470056-9 | SUPPORT ASSY-ALT LOCATION 336 ONLY | 2 | |
| | | ATTACHING PARTS | | |
| - 30 | AN515-8R8 | SCREW | 8 | |
| | AN960-8 | WASHER | 8 | |
| | MS20365-832C | NUT | 8 | |
| - 31 | 0770650-1 | AUX RADIO SHELF 182 ONLY | 1 | |
| - 32 | 0770651-1 | SUPPORT-AUX RADIO SHELF 182 ONLY | 1 | |
| - 33 | 0770651-2 | SUPPORT-AUX RADIO SHELF 182 ONLY | 1 | |
| - 34 | 0770651-3 | SUPPORT-AUX RADIO SHELF 182 ONLY | 1 | |
| - 35 | 1270627-33 | SIDE ANGLE ASSY POSITION #2 205 | 1 | |
| - 36 | 1270627-34 | SIDE ANGLE ASSY POSITION #2 205 | 1 | |
| - 37 | 1270627-69 | ATTACH ANGLE POSITION #2 205 | 1 | |
| | | ATTACHING PARTS | | |
| - 38 | AN520-10R6 | SCREW | 4 | |
| | | ---*--- | | |
| - 39 | | OMNI ANTENNA INSTALLATION SEE FIG 8-2 | N/P | |
| - 40 | | VHF ANTENNA INSTALLATION SEE FIG 8-1 | N/P | |
| - 41 | | NOT USED | | |
| - 42 | | NOT USED | | |
| - 43 | | MARKER BEACON ANTENNA INSTALLATION SEE FIG 8-4 | N/P | |
| - 44 | | NOT USED | | |
| - 45 | | NOT USED | | |
| - 46 | 0770696-4 | PLACARD ASSY | 1 | |
| - 47 | | NOT USED | | |
| - 48 | | NOT USED | | |
| - 49 | R-12 1/2-75-RS34 | RHEOSTAT ALL EXCEPT 336 | 1 | |
| - 50 | S1163-2 | KNOB-RHEOSTAT ALL EXCEPT 336 | 1 | |
| - 51 | | DROPPING RESISTOR-FLT INST & RADIO DIAL LT | 1 | |
| | | SEE FIGURE 10-2 336 ONLY | | |
| | S1232-10 | CIRCUIT BREAKER ALL EXCEPT 336 | 1 | |
| | S1360-5 | CIRCUIT BREAKER 336 ONLY | 1 | |
| | S1103-1 | PHONE JACK | 1 | |
| | 0770039-1 | HEADSET | 1 | |
| | | RADIO NOISE FILTERS SEE FIGURE 10-5 | | |
| - 52 | | MICROPHONE INSTALLATION SEE FIGURE 9-4 | 1 | |
| - 53 | | SPEAKER INSTALLTION SEE FIGURE 9-3 | 1 | |
| - 54 | | NOT USED | | |
| | | CABLE ASSY-DYNAVERTER TO MKR BCN LIGHTS | N/P | |
| | | ALL EXCEPT 336 | | |
| - 55 | MS25237-328 | LAMP | 3 | |
| | 40 OHM 3 WATT | RESISTOR | 1 | |
| | MS25041-4 | LIGHT-AMBER | 1 | |
| | MS25041-1 | LIGHT-CLEAR | 1 | |
| | MS25041-10 | LIGHT-BLUE | 1 | |
| | 126-217 | CONNECTOR | 1 | |
| - 56 | | CABLE ASSY-RCVR-XMTR TO VHF ANT | N/P | |
| | RG-58A/U | COAXIAL CABLE-BULK ITEM | A/R | |
| | UG-913/U | PLUG-COAXIAL RT ANGLE RCVR-XMTR END | 1 | |
| | UG-88C/U | PLUG-COAXIAL | 1 | |
| - 57 | | CABLE ASSY-DYNAVERTER TO MKR BCN ANT | N/P | |
| | RG-58A/U | COAXIAL CABLE-BULK ITEM | A/R | |
| | UG-88C/U | PLUG-COAXIAL DYNAVERTER END | 1 | |
| | UG-88C/U | PLUG-COAXIAL 336 ONLY ANT END | 1 | |
| | S1367-1-8 | TERMINAL ANT END ALL EXCEPT 336 | 1 | |
| | S1367-2-8 | TERMINAL ANT END ALL EXCEPT 336 | 1 | |

CONTINUED ON NEXT PAGE

| FIGURE AND INDEX NO. | PART NUMBER | DESCRIPTION<br>1 2 3 4 5 6 7 | UNITS PER ASSY | USABLE ON CODE |
|---|---|---|---|---|
| 1-2- 58 | | CABLE ASSY-RCVR-XMTR TO OMNI ANT---------- | N/P | |
| | RG-58A/U | COAXIAL CABLE-BULK ITEM---------- | A/R | |
| | 8019-1 TNC | PLUG-COAXIAL RCVR-XMTR END---------- | 1 | |
| | UG-88C/U | PLUG-COAXIAL ANT END---------- | 1 | |
| - 59 | | CABLE ASSY- RCVR- XMTR TO WING ROOT JUNCTION---------- | N/P | |
| | | 336 ONLY | | |
| | 8019-1 TNC | PLUG-COAXIAL- RT ANGLE- RCVR END---------- | 1 | |
| | RG-58A/U | COAXIAL CABLE- BULK ITEM---------- | A/R | |
| | UG-88C/U | PLUG-COAXIAL---------- | 1 | |
| - 60 | | NOT USED | | |
| - 61 | | NOT USED | | |
| - 62 | | CABLE ASY-WING ROOT TO BOOM CONN 336 ONLY---------- | N/P | |
| | RG-58A/U | COAXIAL CABLE-BULK ITEM---------- | A/R | |
| | UG-89/U | JACK-COAXIAL WING ROOT END---------- | 1 | |
| | UG-88C/U | PLUG-COAXIAL BOOM CONN END---------- | 1 | |
| - 63 | | CABLE ASSY-BOOM CONN TO BALUN STUB 336 ONLY---------- | N/P | |
| | RG-58A/U | COAXIAL CABLE-BULK ITEM---------- | A/R | |
| | UG-89/U | JACK-COAXIAL BOOM CONN END---------- | 1 | |
| | UG-88C/U | PLUG-COAXIAL BALUN STUB END---------- | 1 | |
| - 64 | | CABLE ASSY-RCVR-XMTR TO DYNAVERTER, CONV & INDICATOR------ | N/P | |
| | 27827 | CONNECTOR R-T UNIT---------- | 1 | |
| | 27825 | CONNECTOR CONVERTOR---------- | 1 | |
| | AN3106A20-27S | CONNECTOR INDICATOR---------- | 1 | |
| | AN3057-12 | ADAPTER---------- | 1 | |
| - 65 | | NOT USED | | |
| | | RADIO COOLING KIT SEE FIGURE 10-1---------- | A/R | |
| - 66 | | TRANSMITTER SELECTOR SWITCH SEE FIG 9-1---------- | A/R | |
| | 8002-1 TNC | TEE CONNECTOR-COAXIAL REQD FOR DUAL---------- | A/R | |
| | | OMNI RCVRS PLACE TEE ON # 1 RCVR & | | |
| | | CONNECT ANT LEAD IN TO THIS RCVR. | | |
| | | CABLE ASSY-CONNECT # 2 OMNI RCVR TO TEE---------- | N/P | |
| | | ON REAR OF # 1 RCVR | | |
| | RG-58A/U | COAXIAL CABLE-BULK ITEM- 33 INCHES LONG---------- | A/R | |
| | 8019-1 TNC | PLUG-COAXIAL RT ANGLE # 2 RCVR PLUG---------- | 1 | |
| | 8001-1 TNC | PLUG-COAXIAL CONNECT TO TEE ON # 1 RCVR---------- | 1 | |

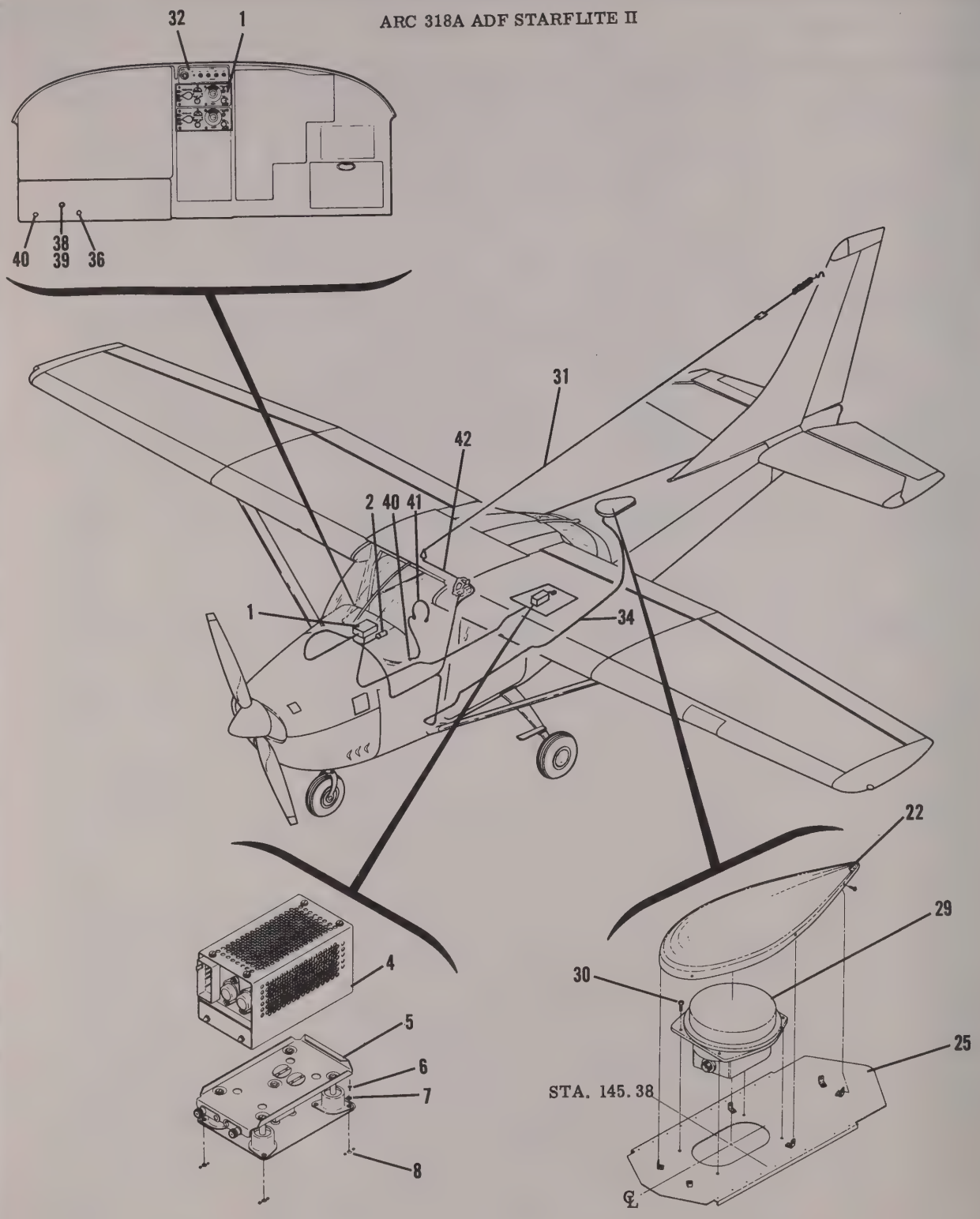


## 182 - 1963 MODELS ONLY

Figure 1-3. ARC 318A ADF Starflite II Radio Installation (Sheet 1 of 4)

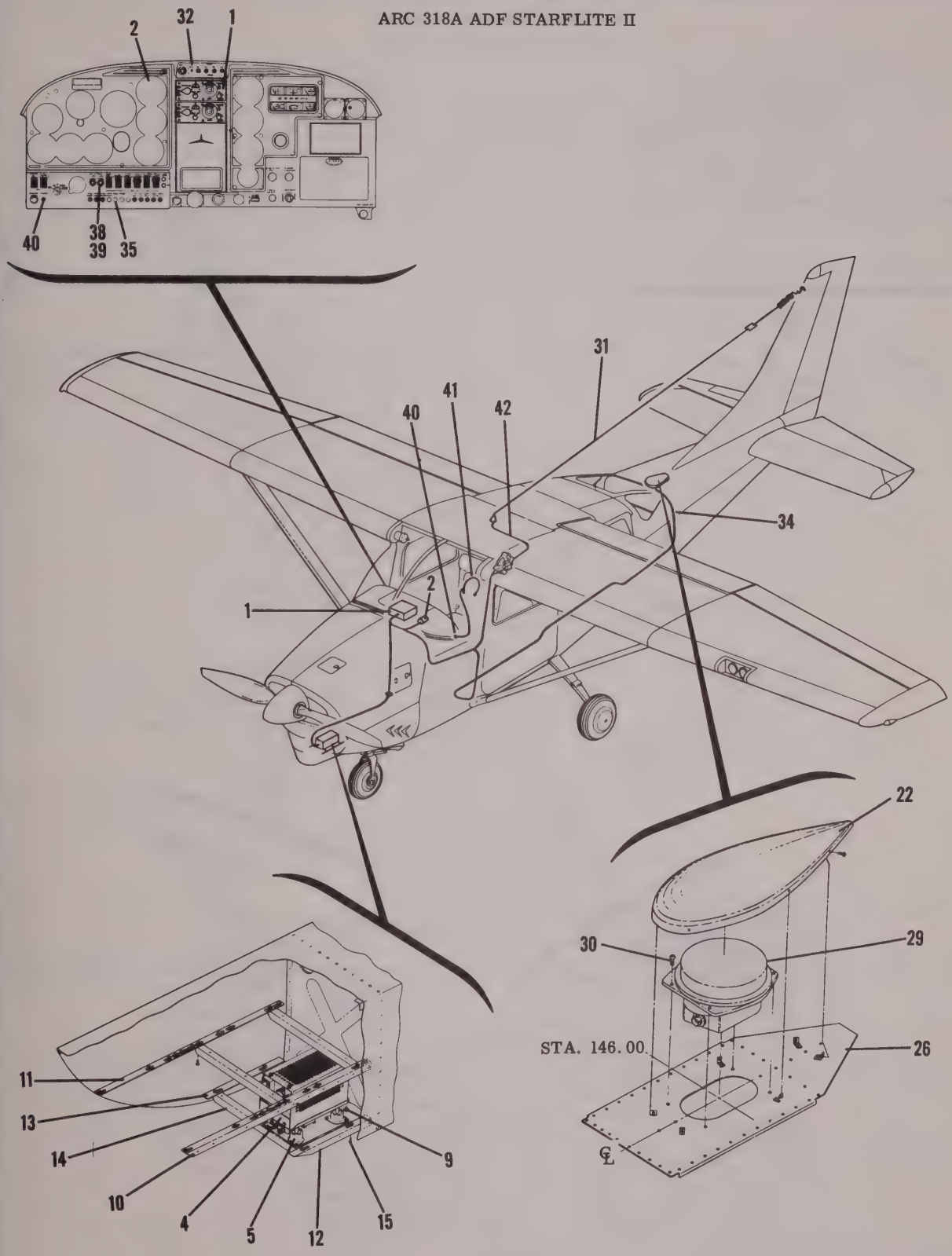


205 - 1963 MODELS ONLY

Figure 1-3. ARC 318A ADF Starflite II Radio Installation (Sheet 2 of 4)

ARC 318A ADF STARFLITE II

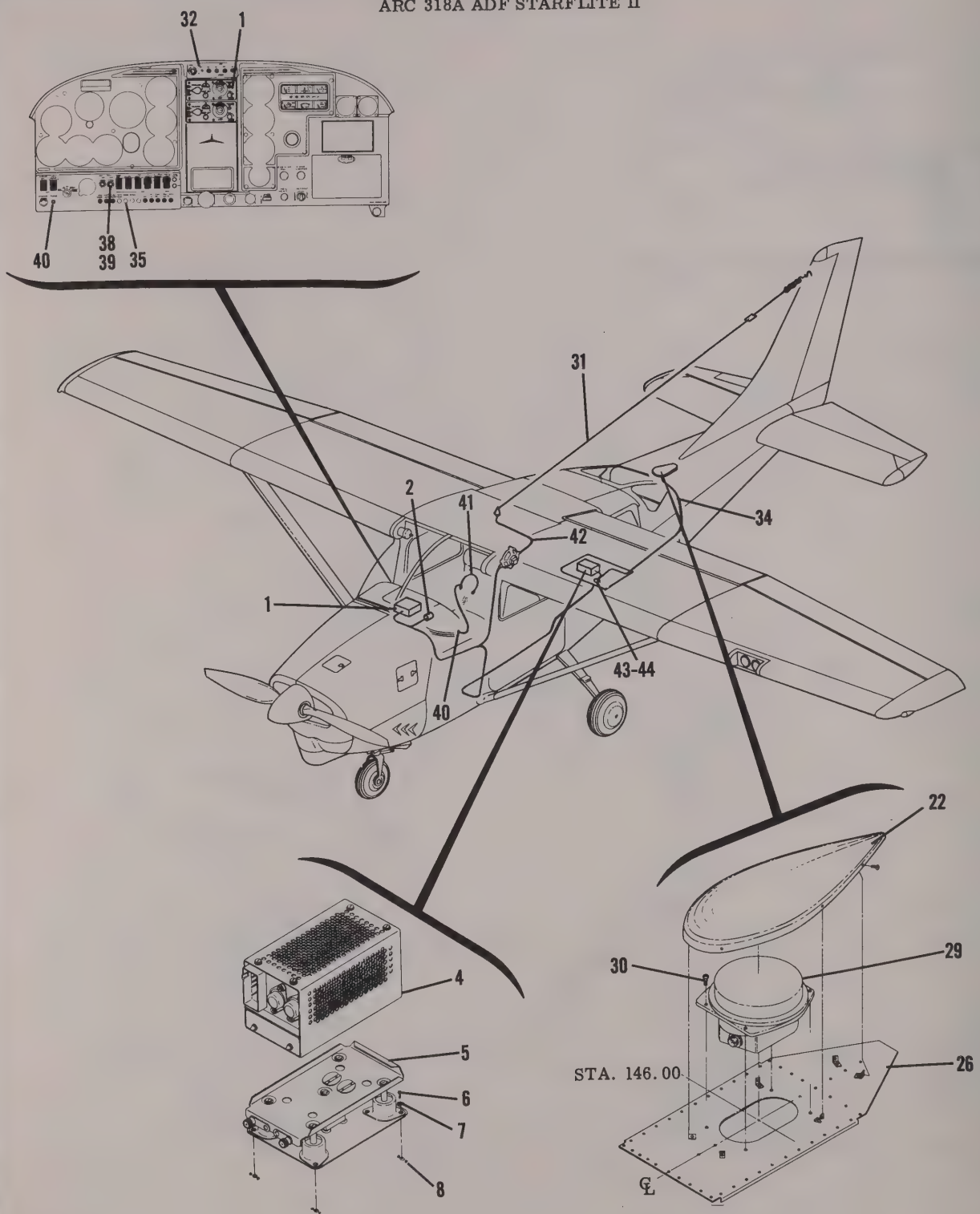


## 210 - 1963 MODELS ONLY

Figure 1-3. ARC 318A ADF Starflite II Radio Installation (Sheet 3 of 4)

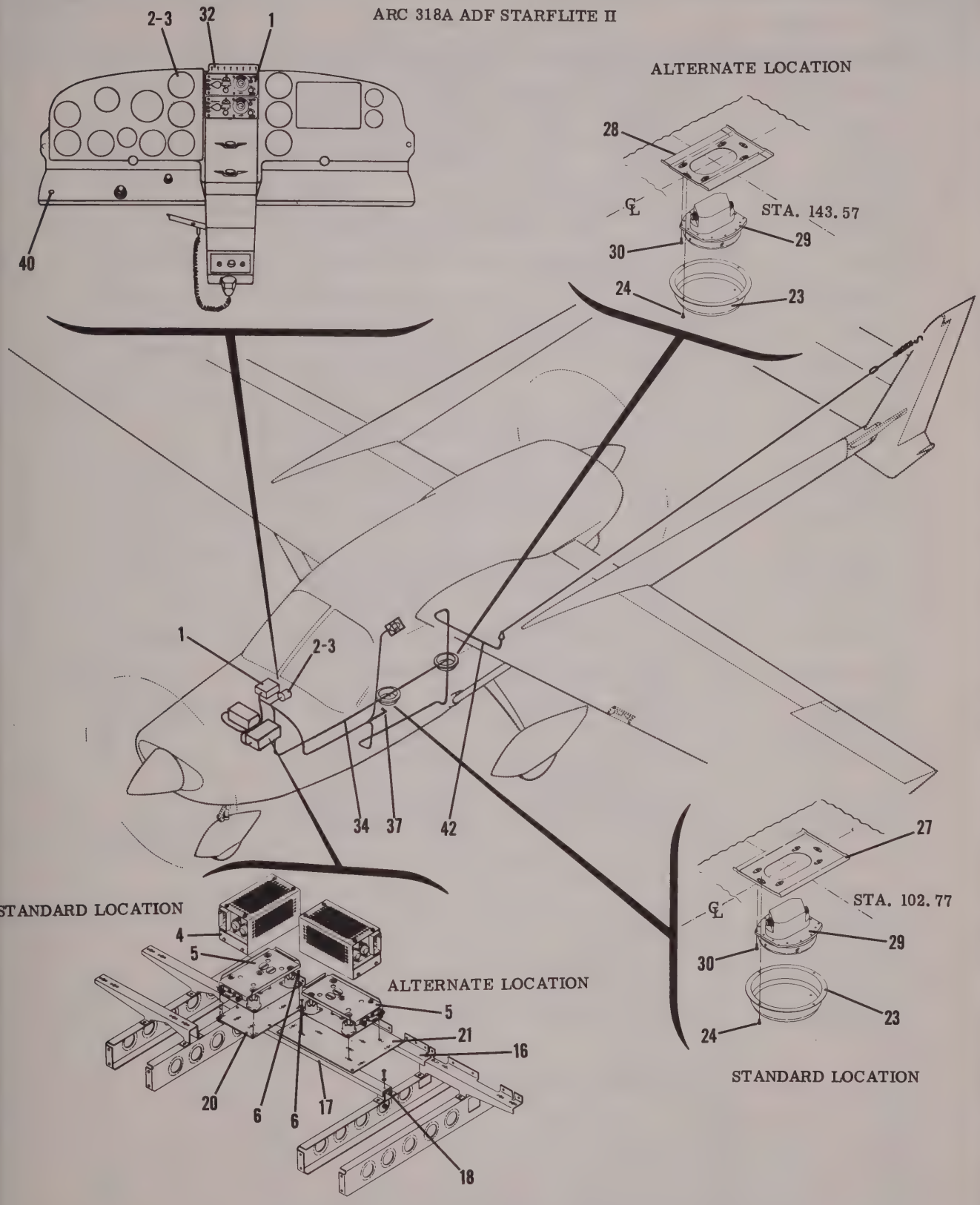


## 336 - EARLY 1964 MODELS ONLY

Figure 1-3. ARC 318A ADF Starflite II Radio Installation (Sheet 4 of 4)

| FIGURE AND INDEX NO. | PART NUMBER | DESCRIPTION<br>1 2 3 4 5 6 7 | UNITS PER ASSY | USABLE ON CODE |
|---|---|---|---|---|
| 1-3- | | ARC STARFLITE II - 318 ADF INSTL---------- | N/P | |
| - 1 | 25400 | RECEIVER- 14 & 28 VOLT- TYPE R- 318A---------- | 1 | |
| | | IF BFO IS DESIRED ADD BFO TO PART NUMBER | | |
| | 27591 | MOUNTING SINGLE- NON SHOCK- TYPE M-303A---------- | A/R | |
| | 27594 | MOUNTING DUAL- NON SHOCK- TYPE M-304A---------- | A/R | |
| | 26780 | MOUNTING SINGLE SHOCK FOR TSO- TYPE M-301A---------- | A/R | |
| | 26790 | MOUNTING DUAL SHOCK FOR TSO- TYPE M-302A---------- | A/R | |
| | | ATTACHING PARTS | | |
| | S1021Z6-8 | SCREW- 6 REQD FOR DUAL MOUNT ALL EXCEPT 336---------- | 4 | |
| | NAS446-2-3 | NUT- 6 REQD FOR DUAL MOUNT ALL EXCEPT 336---------- | 4 | |
| | AN515-6R8 | SCREW- 6 REQD FOR DUAL MOUNT 336 ONLY---------- | 4 | |
| | | ---*--- | | |
| - 2 | 27500 | INDICATOR- SINGLE RCVR- TYPE IN-318A-1---------- | 1 | |
| | | ATTACHING PARTS | | |
| | AN507B632R12 | SCREW---------- | 4 | |
| | | ---*--- | | |
| - 3 | 27470 | INDICATOR- DUAL RCVR- TYPE IN- 13A-1---------- | 1 | |
| | | ATTACHING PARTS | | |
| | AN507B632R12 | SCREW---------- | 3 | |
| | NAS446-2-3 | NUT ---------- | 3 | |
| | | ---*--- | | |
| - 4 | 26960-0014 | DYNAVERTER- 14 VOLT- TYPE DV-318A---------- | 1 | |
| | 26960-0028 | DYNAVERTER- 28 VOLT- TYPE DV-318A---------- | 1 | |
| - 5 | 21650 | MOUNTING- TYPE M-28A---------- | 1 | |
| | | ATTACHING PARTS | | |
| - 6 | AN515-8R16 | SCREW---------- | 4 | |
| - 7 | AN936A8 | WASHER---------- | 4 | |
| - 8 | A8K75 | RIVNUT 182 & 210 ONLY---------- | 4 | |
| - 9 | MS20365-832C | NUT 205, 206 & 210---------- | 4 | |
| | | --*--- | | |
| - 10 | 1270627-85 | SIDE ANGLE ASSY LH SIDE- STD EQUIP 205 & 206---------- | REF | |
| - 11 | 1270627-86 | SIDE ANGLE ASSY RH SIDE- STD EQUIP 205 & 206---------- | REF | |
| - 12 | 1270627-29 | SIDE ANGLE ASSY LH SIDE 205 & 206 ONLY---------- | 1 | |
| - 13 | 1270627-30 | SIDE ANGLE ASSY RH SIDE 205 & 206 ONLY---------- | 1 | |
| - 14 | 1270627-70 | ATTACH ANGLE 205 & 206 ONLY---------- | 2 | |
| | | ATTACHING PARTS | | |
| - 15 | AN520-10R6 | SCREW 205 & 206 ONLY---------- | 4 | |
| | | ---*--- | | |
| - 16 | 1470056-11 | SUPPORT ASSY-INSTALLED AS STD EQUIP 336 ONLY---------- | REF | |
| | | ATTACHING PARTS | | |
| | AN515-8R8 | SCREW---------- | 1 | |
| | AN960-8 | WASHER---------- | 1 | |
| | MS20364-832C | NUT ---------- | 1 | |
| | | ---*--- | | |
| - 17 | 1470056-13 | SUPPORT ASSY 336 ONLY---------- | 1 | |
| | | ATTACHING PARTS | | |
| | AN515-8R8 | SCREW---------- | 2 | |
| | AN960-8 | WASHER---------- | 2 | |
| | MS20364-832C | NUT ---------- | 2 | |
| | | ---*--- | | |
| - 18 | 1470113-7 | SUPPORT 336 ONLY---------- | 1 | |
| | | ATTACHING PARTS | | |
| | AN515-8R8 | SCREW---------- | 2 | |
| | AN960-8 | WASHER---------- | 2 | |
| | MS20364-832C | NUT ---------- | 2 | |
| | | ---*--- | | |
| - 19 | 1470056-14 | SUPPORT ASSY 336 ONLY---------- | 1 | |
| | | ATTACHING PARTS | | |
| | AN515-8R8 | SCREW---------- | 3 | |
| | AN960-8 | WASHER---------- | 3 | |
| | MS20364-832C | NUT ---------- | 3 | |
| | | ---*--- | | |

CONTINUED ON NEXT PAGE

| FIGURE AND INDEX NO. | PART NUMBER | DESCRIPTION 1 2 3 4 5 6 7 | UNITS PER ASSY | USABLE ON CODE |
|---|---|---|---|---|
| 1-3- 20 | 1470113-5 | MOUNTING PLATE ASSY 336 ONLY | 1 | |
| | | ATTACHING PARTS | | |
| | NAS43-3-16 | SPACER | 8 | |
| | AN515-8R8 | SCREW | 8 | |
| | | ---*--- | | |
| - 21 | 1470098-1 | MOUNTING PLATE ASSY 336 ONLY | 1 | |
| | | ATTACHING PARTS | | |
| | AN520-10R10 | SCREW | 4 | |
| | | ---*--- | | |
| - 22 | 19050 | LOOP HOUSING KIT ALL EXCEPT 336 | 1 | |
| - 23 | 1470094-1 | LOOP HOUSING 336 ONLY | 1 | |
| | | ATTACHING PARTS | | |
| - 24 | AN515-8R8 | SCREW | 4 | |
| | NAS686A385 | NUTPLATE | 2 | |
| | | ---*--- | | |
| - 25 | 0770645-3 | LOOP MOUNTING PLATE ASSY 182 ONLY | 1 | |
| - 26 | 1270423-3 | LOOP DOUBLER ASSY 205, 206 & 210 | 1 | |
| - 27 | 1470091-1 | LOOP DOUBLER ASSY-FWD LOCATION 336 ONLY | 1 | |
| - 28 | 1470092-1 | LOOP DOUBLER ASSY-AFT LOCATION 336 ONLY | 1 | |
| - 29 | 1800 | LOOP ANTENNA- TYPE L-11 | 1 | |
| | | ATTACHING PARTS | | |
| - 30 | AN515-8R12 | SCREW | 4 | |
| | | ---*--- | | |
| - 31 | | SENSE ANTENNA INSTL- SEE FIG 8-6 | 1 | |
| - 32 | | AUDIO SELECTOR SWITCH INSTL- SEE FIG 9-1 | A/R | |
| - 33 | | NOT USED | | |
| - 34 | 17985 | CABLE ASSY- RCVR TO LOOP | 1 | |
| | 26795 | PLUG 15 PIN- MATES RCVR | 1 | |
| | 27881 | PLUG 19 PIN- MATES DYNAVERTER | 1 | |
| | AN3106A14S6S | PLUG 6 PIN- MATES LOOP | 1 | |
| | AN3057-6 | ADAPTER | | |
| | AN3108-14S2S | PLUG 4 PIN- MATES INDICATOR | 1 | |
| | 27873 | FILTER KIT- REQD FOR TSO ONLY | 1 | |
| - 35 | S1360-10 | CIRCUIT BREAKER ALL EXCEPT 336 | 1 | |
| - 36 | | NOT USED | | |
| - 37 | S1360-5 | CIRCUIT BREAKER 336 ONLY | 1 | |
| - 38 | R-12 1/2-75-RS34 | RHEOSTAT ALL EXCEPT 336 | 1 | |
| - 39 | S1163-2 | KNOB-RHEOSTAT ALL EXCEPT 336 | 1 | |
| - 40 | S1103-1 | PHONE JACK | 1 | |
| - 41 | 0770039-1 | HEADSET ASSY | 1 | |
| - 42 | 18637 | CABLE ASSY- RCVR TO SENSE ANT ALL EXCEPT 336 | 1 | |
| | 1470088-28 | CABLE ASSY- RCVR TO SENSE ANT 336 ONLY | 1 | |
| | K-109A | CABLE-COAXIAL 15 FT LONG | 1 | |
| | 85075 | PLUG-COAXIAL | 2 | |
| | | DROPPING RESISTOR-FLT INST & RADIO DIAL LT | 1 | |
| | | SEE FIGURE 10-2 336 ONLY | | |
| | | RADIO COOLING KIT SEE FIGURE 10-1 | A/R | |
| | | SPEAKER INSTALLATION SEE FIGURE 9-3 | A/R | |
| | | RADIO NOISE FILTERS SEE FIGURE 10-5 | A/R | |
| - 43 | S1261-1 | COVER 210 ONLY | 2 | |
| - 44 | MS35489-12 | GROMMET 210 ONLY | 1 | |

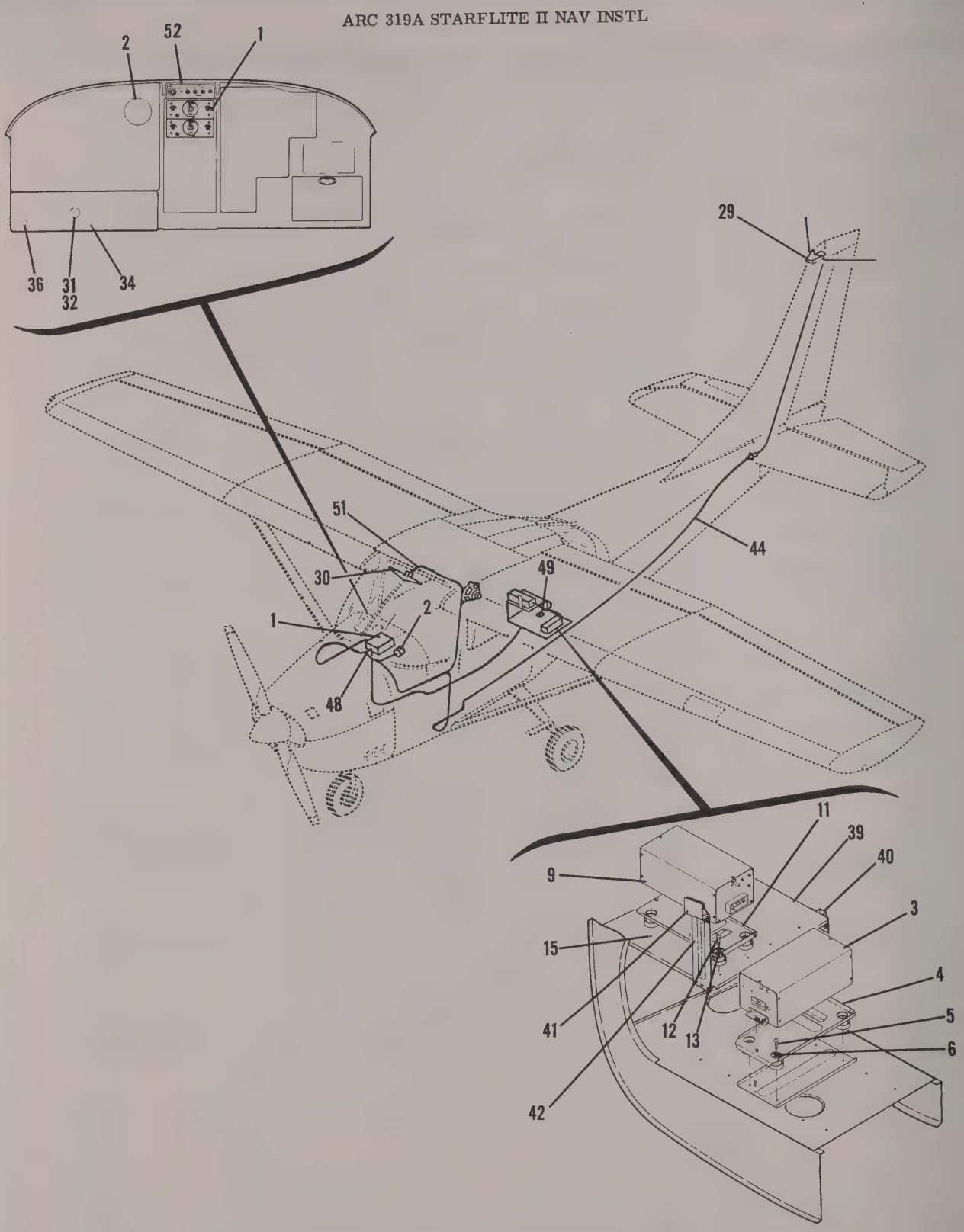


## 182 - 1963 MODELS ONLY

Figure 1-4. ARC 319A Starflite II Nav Radio Installation (Sheet 1 of 4)

ARC 319A STARFLITE II NAV INSTL

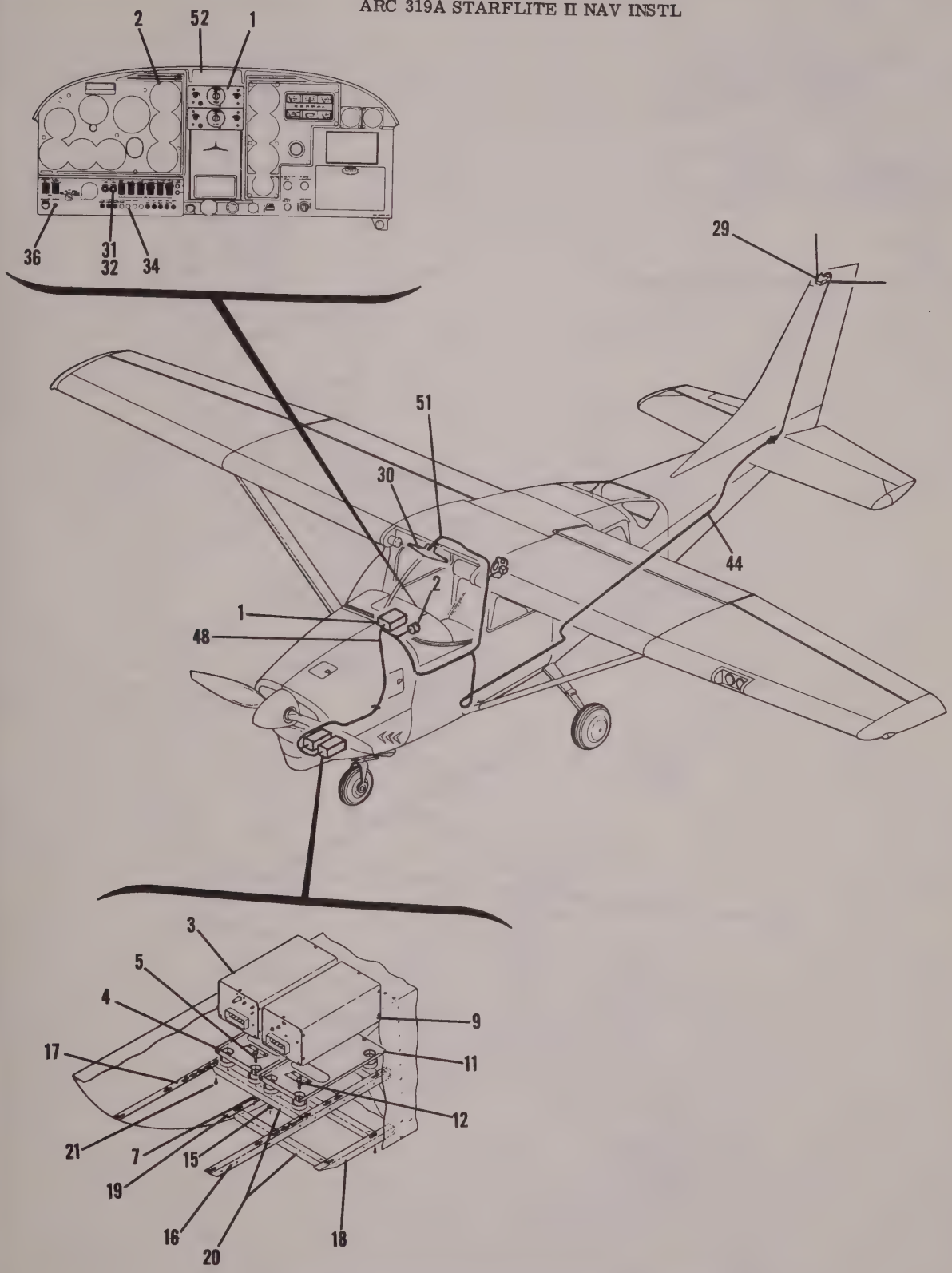


## 205 - 1963 MODELS ONLY

Figure 1-4. ARC 319A Starflite II Nav Radio Installation (Sheet 2 of 4)

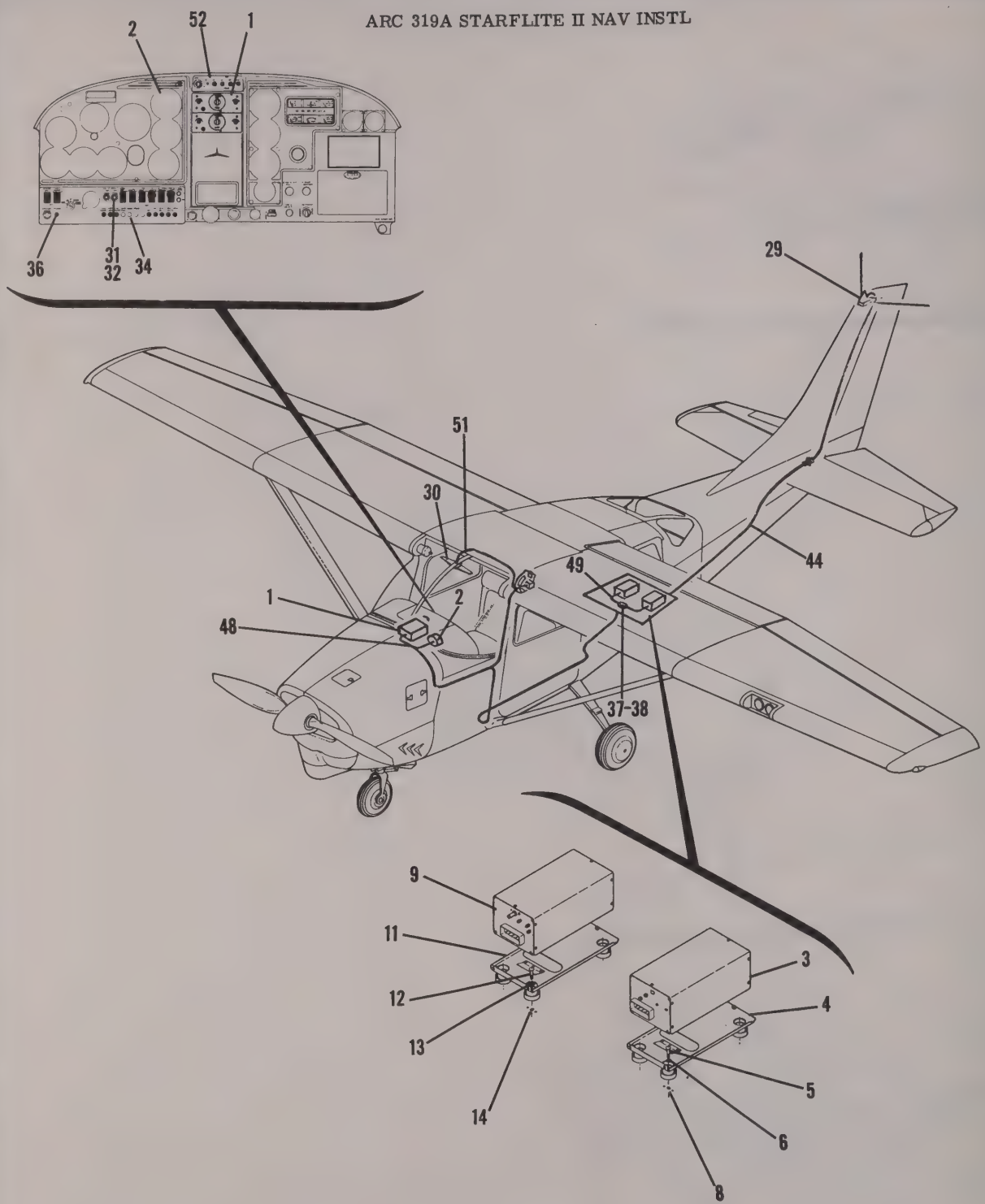


## 210 - 1963 MODELS ONLY

Figure 1-4. ARC 319A Starflite II Nav Radio Installation (Sheet 3 of 4)

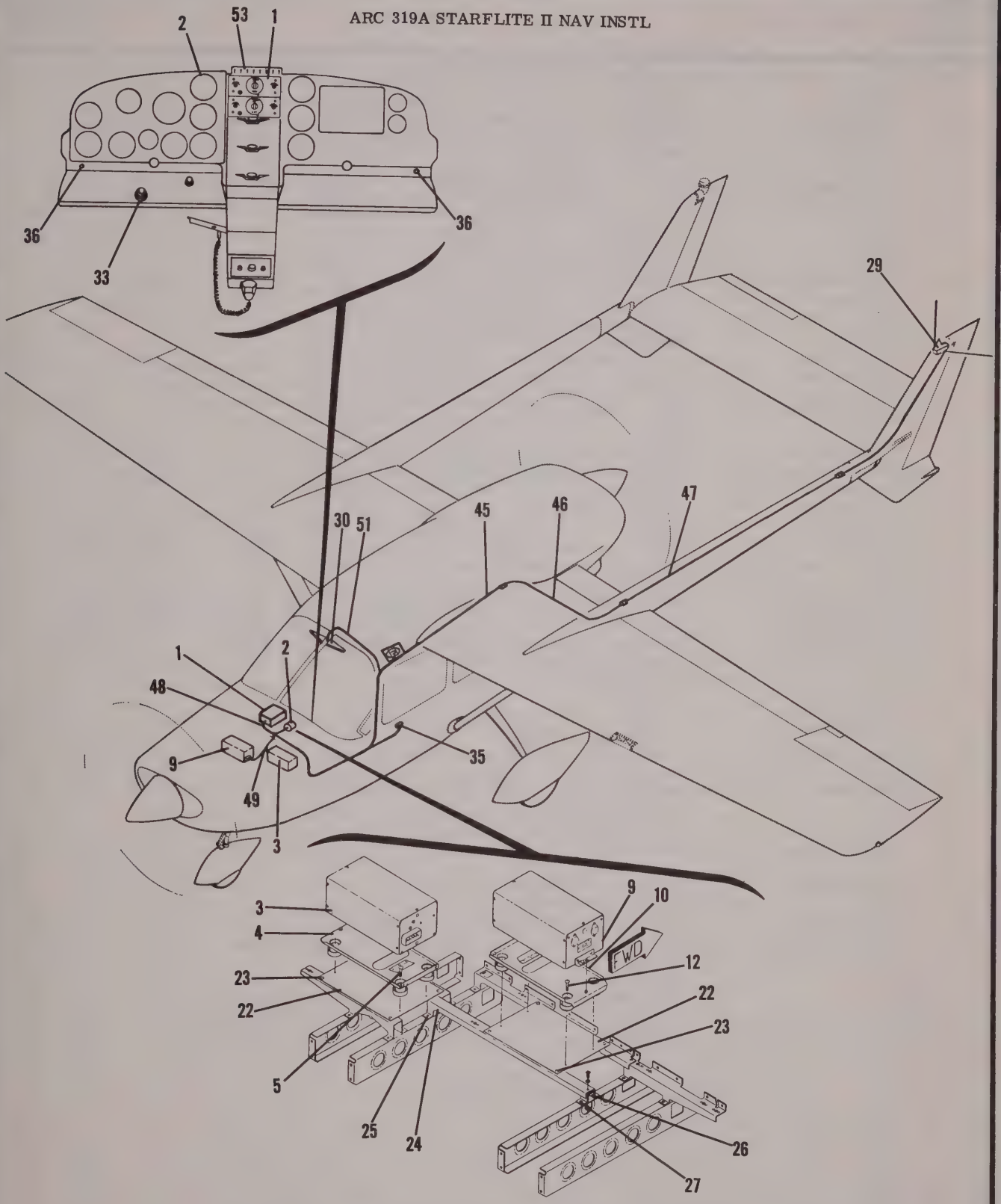


## 336 - EARLY 1964 MODELS ONLY

Figure 1-4. ARC 319A Starflite II Nav Radio Installation (Sheet 4 of 4)

| FIGURE AND INDEX NO. | PART NUMBER | DESCRIPTION<br>1 2 3 4 5 6 7 | UNITS PER ASSY | USABLE ON CODE |
|---|---|---|---|---|
| 1-4- | | ARC STARFLITE II- TYPE 319 INSTL---------- | N/P | |
| - 1 | 28310 | RECEIVER 14 & 28 VOLT---------- | 1 | |
| | 27591 | MOUNTING SINGLE NON SHOCK- TYPE M-303A---------- | A/R | |
| | 27594 | MOUNTING DUAL NON SHOCK- TYPE M-304A---------- | A/R | |
| | 26780 | MOUNTING SINGLE SHOCK FOR TSO- TYPE M-301A---------- | A/R | |
| | 26790 | MOUNTING DUAL SHOCK FOR TSO- TYPE M-302A---------- | A/R | |
| | | ATTACHING PARTS | | |
| | S1021Z6-8 | SCREW- 6 REQD FOR DUAL MOUNT ALL EXCEPT 336---------- | 4 | |
| | NAS446-2-3 | NUT- 6 REQD FOR DUAL MOUNT ALL EXCEPT 336---------- | 4 | |
| | AN515-6R8 | SCREW- 6 REQD FOR DUAL MOUNT 336 ONLY---------- | 4 | |
| | | ---*--- | | |
| - 2 | 27510 | INDICATOR- TYPE IN- 319A-1---------- | 1 | |
| | | ATTACHING PARTS | | |
| | AN507B632R12 | SCREW---------- | 3 | |
| | NAS446-2-3 | NUT ---------- | 3 | |
| | | ---*--- | | |
| - 3 | 24660 | CONVERTER- TYPE B- 317A---------- | 1 | |
| - 4 | 24900 | MOUNTING- TYPE M-335A---------- | 1 | |
| | | ATTACHING PARTS | | |
| - 5 | AN515-8R8 | SCREW---------- | 4 | |
| - 6 | AN936A8 | WASHER---------- | 4 | |
| - 7 | MS20365-832C | NUT 205 & 206---------- | 4 | |
| - 8 | A8K75 | RIVNUT 182 & 210---------- | 4 | |
| | | ---*--- | | |
| - 9 | 31360-0014 | DYNAVERTER- TYPE DV- 319B- 14 VOLT---------- | 1 | |
| - 10 | 31360-0028 | DYNAVERTER- TYPE DV- 319B- 28 VOLT---------- | 1 | |
| - 11 | 24900 | MOUNTING- TYPE M-335A---------- | 1 | |
| | | ATTACHING PARTS | | |
| - 12 | AN515-8R16 | SCREW---------- | 4 | |
| - 13 | AN936A8 | WASHER---------- | 4 | |
| - 14 | A8K75 | RIVNUT 182 & 210---------- | 4 | |
| - 15 | MS20365-832C | NUT 205 & 206---------- | 4 | |
| | | ---*--- | | |
| - 16 | 1270627-85 | SIDE ANGLE ASSY LH SIDE-STD EQUIP 205 &206---------- | REF | |
| - 17 | 1270627-86 | SIDE ANGLE ASSY RH SIDE-STD EQUIP 205& 206---------- | REF | |
| - 18 | 1270627-29 | SIDE ANGLE ASSY LH SIDE-LOWER LOCATION 205 & 206---------- | A/R | |
| - 19 | 1270627-30 | SIDE ANGLE ASSY RH SIDE-LOWER LOCATION 205 & 206---------- | A/R | |
| - 20 | 1270627-69 | ATTACH ANGLE- 205 & 206---------- | 2 | |
| | | ATTACHING PARTS | | |
| - 21 | AN520-10R6 | SCREW---------- | 4 | |
| | | ---*--- | | |
| - 22 | 1470098-1 | PLATE ASSY 336 ONLY---------- | 2 | |
| | | ATTACHING PARTS | | |
| - 23 | AN520-10R10 | SCREW---------- | 4 | |
| | | ---*--- | | |
| - 24 | 1470056-13 | SUPPORT ASSY 336 ONLY---------- | 1 | |
| | | ATTACHING PARTS | | |
| - 25 | AN515-8R8 | SCREW---------- | 3 | |
| | AN960-8 | WASHER---------- | 3 | |
| | MS20365-832C | NUT ---------- | 3 | |
| | | ---*--- | | |
| - 26 | 1470113-7 | SUPPORT---------- | 1 | |
| | | ATTACHING PARTS | | |
| - 27 | AN515-8R8 | SCREW---------- | 3 | |
| | AN960-8 | WASHER---------- | 3 | |
| | MS20365-832C | NUT ---------- | 3 | |
| | | ---*--- | | |
| - 28 | | NOT USED | | |
| - 29 | | OMNI ANTENNA INSTALLATION- SEE FIGURE 8-2---------- | 1 | |
| - 30 | | GLIDE SLOPE ANTENNA INSTALLATION- SEE FIGURE 8-3---------- | 1 | |
| - 31 | R-12 1/2-75-RS34 | RHEOSTAT 182, 205, 206 & 210---------- | 1 | |
| - 32 | S1163-2 | KNOB-RHEOSTAT 182, 205, 206 & 210---------- | 1 | |

CONTINUED ON NEXT PAGE

| FIGURE AND INDEX NO. | PART NUMBER | DESCRIPTION 1 2 3 4 5 6 7 | UNITS PER ASSY | USABLE ON CODE |
|---|---|---|---|---|
| 1-4- 33 | | DROPPING RESISTOR-FLT INST & RADIO DIAL LT---------- | 1 | |
| | | SEE FIGURE 10-2 336 ONLY | | |
| - 34 | S1232-10 | CIRCUIT BREAKER ALL EXCEPT 336---------- | 1 | |
| - 35 | S1360-5 | CIRCUIT BREAKER 336 ONLY---------- | 1 | |
| - 36 | S1103-1 | PHONE JACK---------- | 1 | |
| | 0770039-1 | HEADSET---------- | 1 | |
| - 37 | S1261-1 | COVER PLATE 210 ONLY---------- | 2 | |
| - 38 | MS35489-12 | GROMMET 210 ONLY---------- | 1 | |
| - 39 | 0880650-1 | AUX RADIO SHELF 182 ONLY---------- | 1 | |
| - 40 | 0770651-1 | SUPPORT- AUX RADIO SHELF 182 ONLY---------- | 1 | |
| - 41 | 0770651-2 | SUPPORT- AUX RADIO SHELF 182 ONLY---------- | 1 | |
| - 43 | | NOT USED | | |
| - 44 | | CABLE ASSY- RCVR TO BALUN STUB 182, 205, 206 & 210---- | N/P | |
| | RG-58A/U | COAXIAL CABLE- BULK ITEM---------- | A/R | |
| | UG-88C/U | PLUG-COAXIAL- BALUN STUB END---------- | 1 | |
| | 8019-1 TNC | PLUG-COAXIAL- RT ANGLE- RCVR END---------- | 1 | |
| - 45 | | CABLE ASSY- RCVR TO WING ROOT JUNCTION 336 ONLY------- | N/P | |
| | | STANDARD EQUIPMENT | | |
| | RG-58A/U | COAXIAL CABLE- BULK ITEM---------- | A/R | |
| | UG-88C/U | PLUG-COAXIAL- WING ROOT END---------- | 1 | |
| | 8019-1 TNC | PLUG-COAXIAL- RT ANGLE- RCVR END---------- | 1 | |
| - 46 | | CABLE ASSY- WING ROOT TO BOOM CONN 336 ONLY---------- | N/P | |
| | | STANDARD EQUIPMENT | | |
| | RG-58A/U | COAXIAL CABLE- BULK ITEM---------- | A/R | |
| | UG-89/U | JACK- COAXIAL- WING ROOT END---------- | 1 | |
| | UG-88C/U | PLUG- COAXIAL- BOOM CONNECTION END---------- | 1 | |
| - 47 | | CABLE ASSY -BOOM CONNECTOR TO BALUN STUB 336 ONLY----- | N/P | |
| | RG-58A/U | COAXIAL CABLE- BULK ITEM---------- | A/R | |
| | UG-89/U | JACK-COAXIAL---------- | 1 | |
| | UG-88C/U | PLUG- COAXIAL---------- | 1 | |
| - 48 | | CABLE ASSY- INTER CONNECTING---------- | N/P | |
| | 28822 | PLUG- 20 PIN- MATES RECEIVER & DYNAVERTER---------- | 2 | |
| | 27825 | PLUG- 15 PIN- MATES CONVERTER---------- | 1 | |
| | AN3106A20-27S | PLUG- MATES INDICATOR---------- | 1 | |
| | AN3057-12 | ADAPTER- WIRE---------- | 1 | |
| - 49 | | CABLE ASSY- RCVR TO DYNAVERTER---------- | N/P | |
| | RG-58A/U | COAXIAL CABLE-BULK ITEM---------- | A/R | |
| | UG-88C/U | PLUG-COAXIAL- MATES DYNAVERTER---------- | 1 | |
| | 5134-1 DM | PLUG- COAXIAL-MATES RCVR---------- | 1 | |
| - 50 | | NOT USED | | |
| - 51 | | CABLE ASSY- RCVR TO GS ANTENNA---------- | N/P | |
| | RG-58A/U | COAXIAL CABLE- BULK ITEM---------- | A/R | |
| | UG-88C/U | PLUG- COAXIAL 336 ONLY---------- | 1 | |
| | S1267-1-4 | TERMINAL---------- | 2 | |
| | UG-913/U | PLUG- COAXIAL- RT ANGLE 182, 205, 206 & 210--------- | 1 | |
| | 8002-1 TNC | TEE CONNECTOR- COAXIAL USED FOR CONNECTING---------- | A/R | |
| | | DUAL OMNI RCVRS TO SINGLE ANT-ATTACH | | |
| | | TO NO. 1 RCVR AND USE CABLE BELOW TO | | |
| | | CONNECT RCVR NO. 2 | | |
| | | CABLE ASSY- TEE CONN TO NO. 2 RCVR---------- | N/P | |
| | RG-58A/U | COAXIAL CABLE- BULK ITEM-34.5 IN LONG---------- | A/R | |
| | 8001-1 TNC | PLUG- COAXIAL- TEE END---------- | 1 | |
| | 8019-1 TNC | PLUG- COAXIAL- RT ANGLE- RCVR NO. 2 END---------- | 1 | |
| | | RADIO COOLING INSTL- SEE FIG. 10-1---------- | A/R | |
| | | RADIO NOISE FILTERS- SEE FIG. 10-5---------- | A/R | |
| - 52 | | AUDIO SELECTOR SWITCHES- SEE FIG 9-1---------- | A/R | |

# SECTION II

# CESSNA ELECTRONIC EQUIPMENT

TABLE OF CONTENTS


| Figure | | Page |
|---|---|---|
| 2-1 | Cessna ADF 300 Radio Installation (Type 521A) | 2-2 |
| 2-2 | Cessna Nav/Com 300 Radio Installation (Type 513A) | 2-10 |
| 2-3 | Cessna Nav-O-Matic 200 Installation (Model 150 Only) | 2-20 |
| 2-3A | Cessna Nav-O-Matic 200 & 300 Installations (Models 172 & P172) | 2-23 |
| 2-3B | Cessna Nav-O-Matic 200 & 300 Installations (Models 180 & 185) | 2-26 |
| 2-3C | Cessna Nav-O-Matic 200 & 300 Installations (Models 182, 205 & 210) | 2-29 |
| 2-3D | Cessna Nav-O-Matic 200 & 300 Installations (Models 206, P206, U206, TP206, TU206, 210 & T210) | 2-32 |
| 2-3E | Cessna Nav-O-Matic 200 & 300 Installations (Models 336 & 337) | 2-35 |
| 2-4 | Cessna Transceiver 500 Radio Installation (Type 302A) | 2-38 |
| 2-5 | Cessna Nav/Com 500 Radio Installation (Type 317A) | 2-46 |
| 2-6 | Cessna ADF 500 Radio Installation (Type 318A - Rotatable Loop) | 2-56 |
| 2-7 | Cessna Nav/Omni 500 Radio Installation (Type 319A) | 2-65 |
| 2-8 | Cessna 1 1/2 Nav/Com 300 or 300R Radio Installation (Type 514A, 516A, 514R, or 515R) | 2-74 |
| 2-9 | Cessna Marker Beacon 300 (Type R-502B) | 2-85 |
| 2-10 | Cessna ADF 300 Radio Installation (Type 521B) | 2-94 |
| 2-11 | Cessna Transceiver 300 Radio Installation (Type 524A) | 2-101 |
| 2-12 | Cessna Nav/Omni 300 (Type 525A) | 2-109 |
| 2-13 | Cessna Nav-O-Matic 400 Installation (Model 172 Only) | 2-119 |
| 2-14 | Cessna Nav-O-Matic 400 Installation (Models 180 & 185 Only) | 2-122 |
| 2-15 | Cessna Nav-O-Matic 400 Installation (Model 182 Only) | 2-125 |
| 2-16 | Cessna Nav-O-Matic 400 Installation (Models P206, TP206, U206, & TU206 Only) | 2-128 |
| 2-17 | Cessna Nav-O-Matic 400 Installation (Models 210 & T210 Only) | 2-131 |
| 2-18 | Cessna Nav-O-Matic 400 Installation (Model 337 Only) | 2-134 |
| 2-19 | Cessna ADF 500 Radio Installation (Type 318G - Fixed Loop) | 2-137 |

CESSNA ADF 300 RADIO INSTALLATION

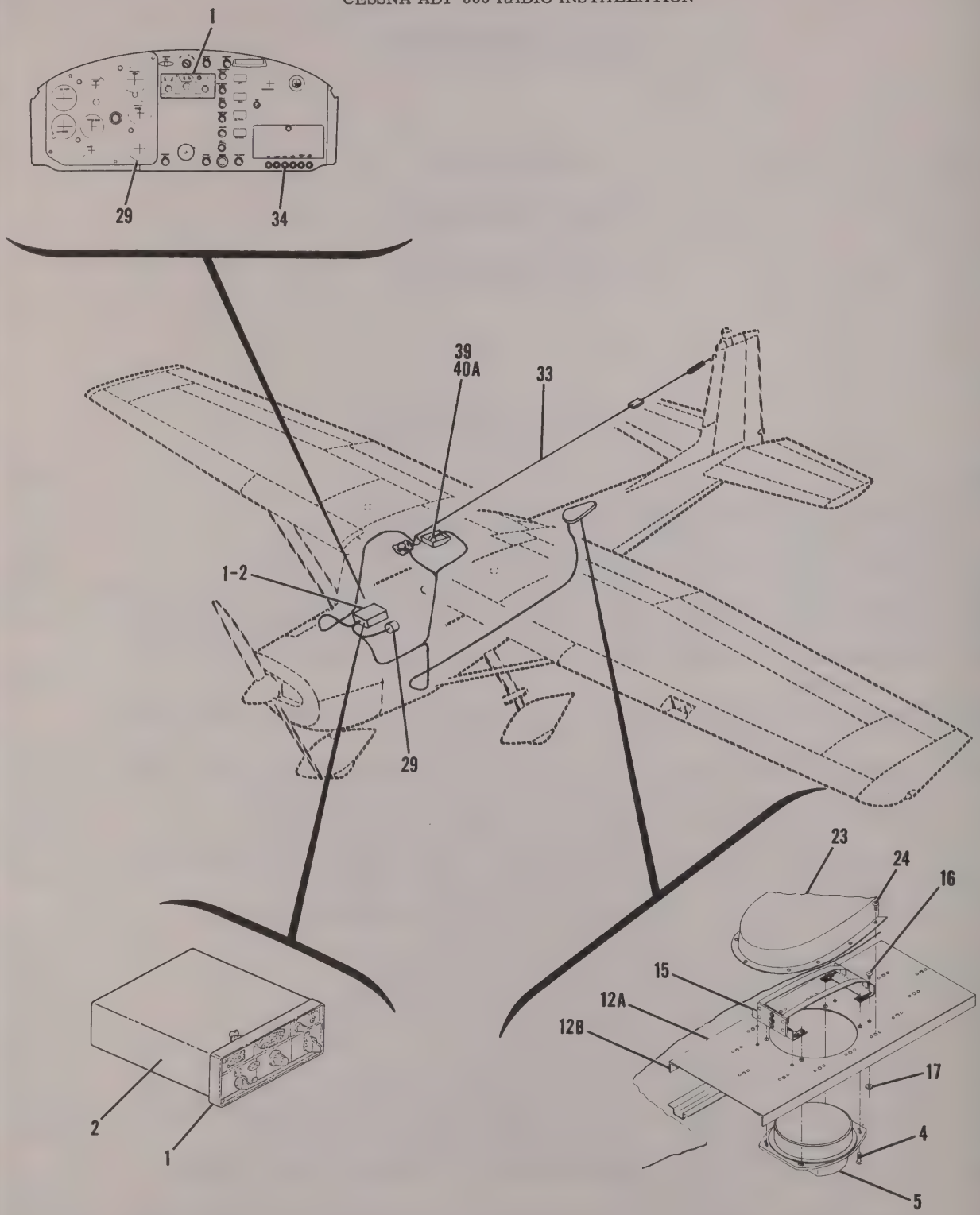


## 150 SERIAL 15060088 THRU 15060772

Figure 2-1. Cessna ADF 300 (Type 521A) Radio Installation - Sheet 1

CESSNA ADF 300 RADIO INSTALLATION

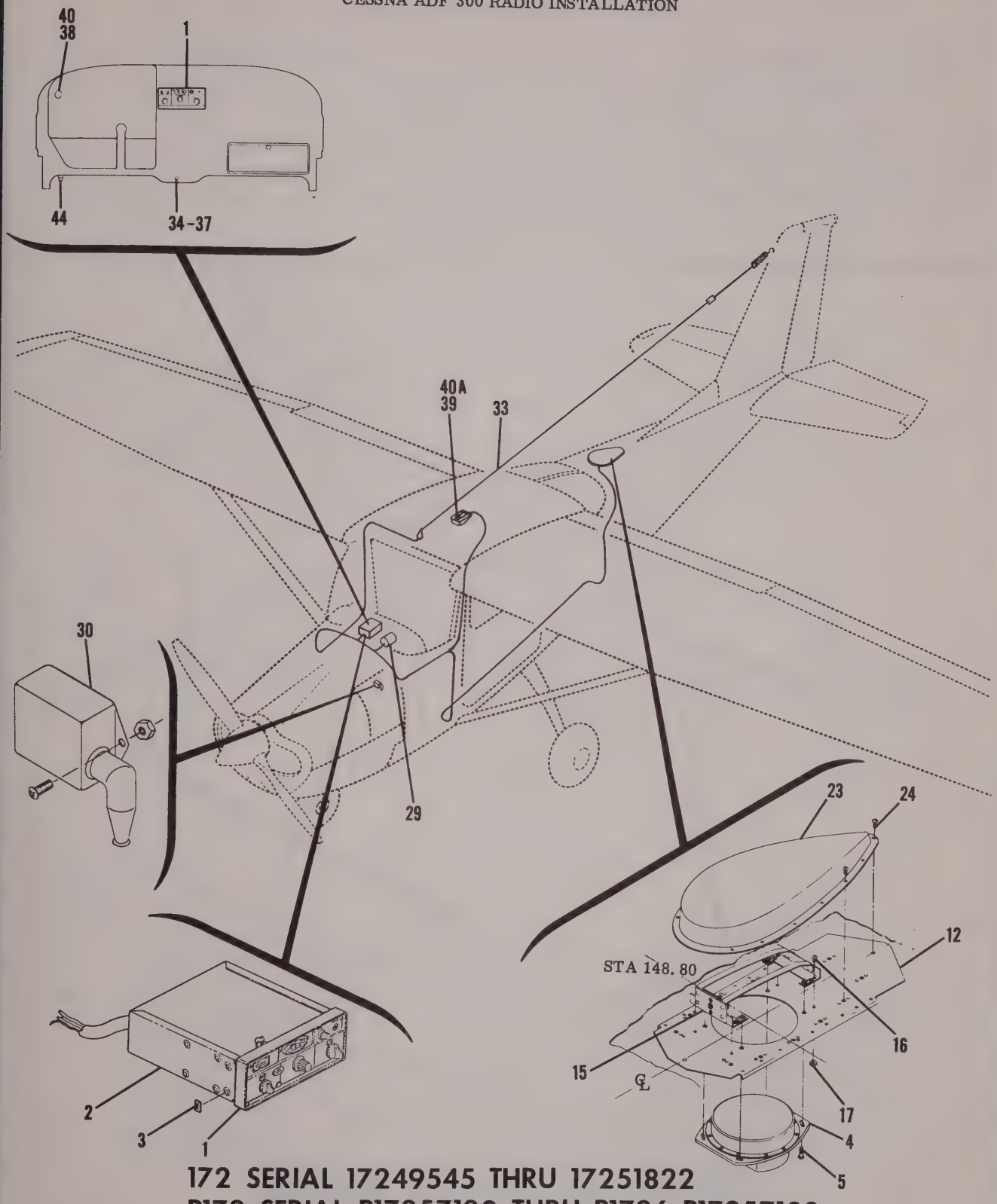


**172 SERIAL 17249545 THRU 17251822**
**P172 SERIAL P17257120 THRU P1726 P17257188**

Figure 2-1. Cessna ADF 300 (Type 521A) Radio Installation - Sheet 2

CESSNA ADF 300 RADIO INSTALLATION

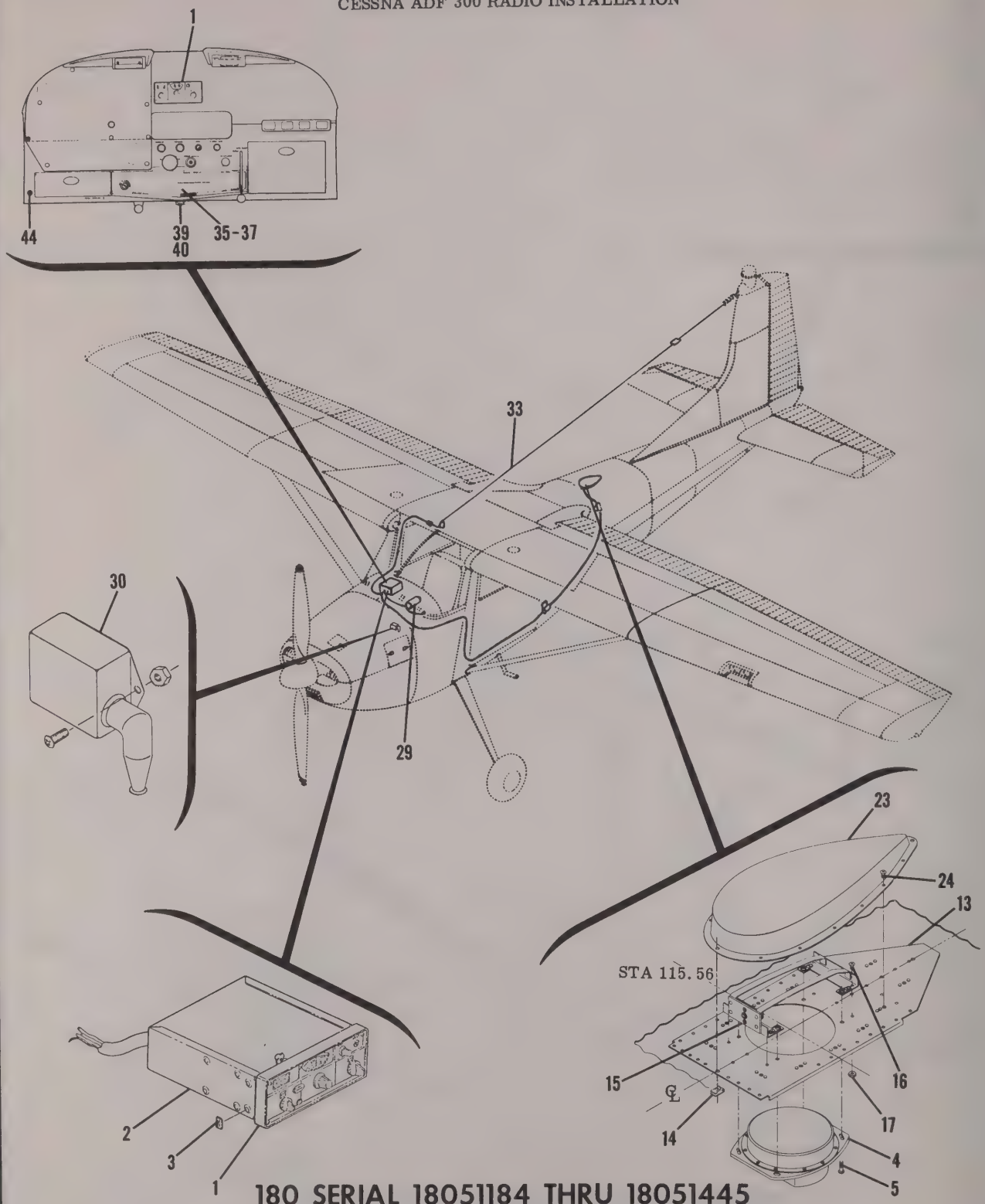


**180 SERIAL 18051184 THRU 18051445**
**185 SERIAL 185-0498 THRU 185-0776**

Figure 2-1. Cessna ADF 300 (Type 521A) Radio Installation - Sheet 3

CESSNA ADF 300 RADIO INSTALLATION

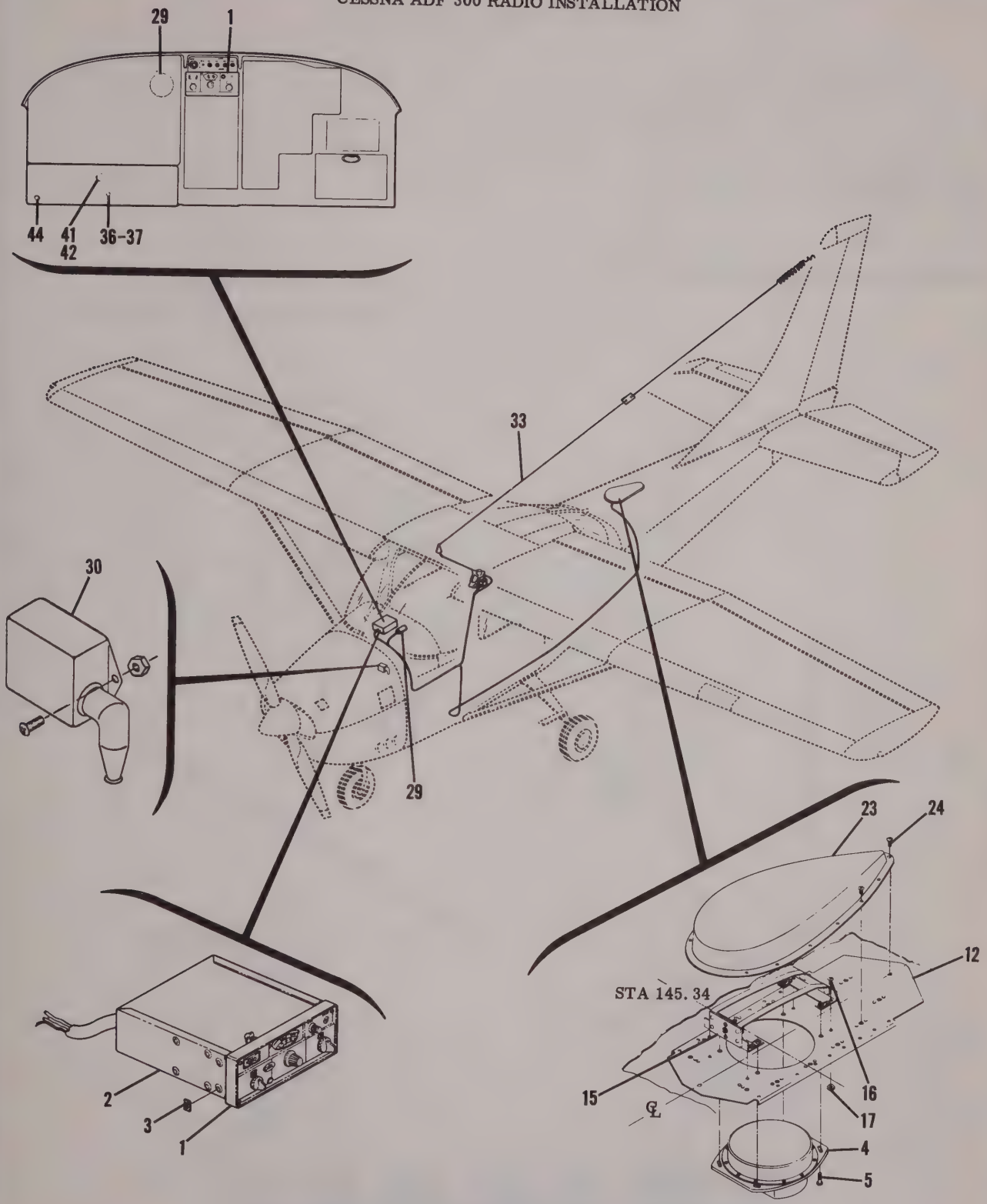


## 182 SERIAL 18254347 THRU 18255844

Figure 2-1. Cessna ADF 300 (Type 521A) Radio Installation - Sheet 4

CESSNA ADF 300 RADIO INSTALLATION

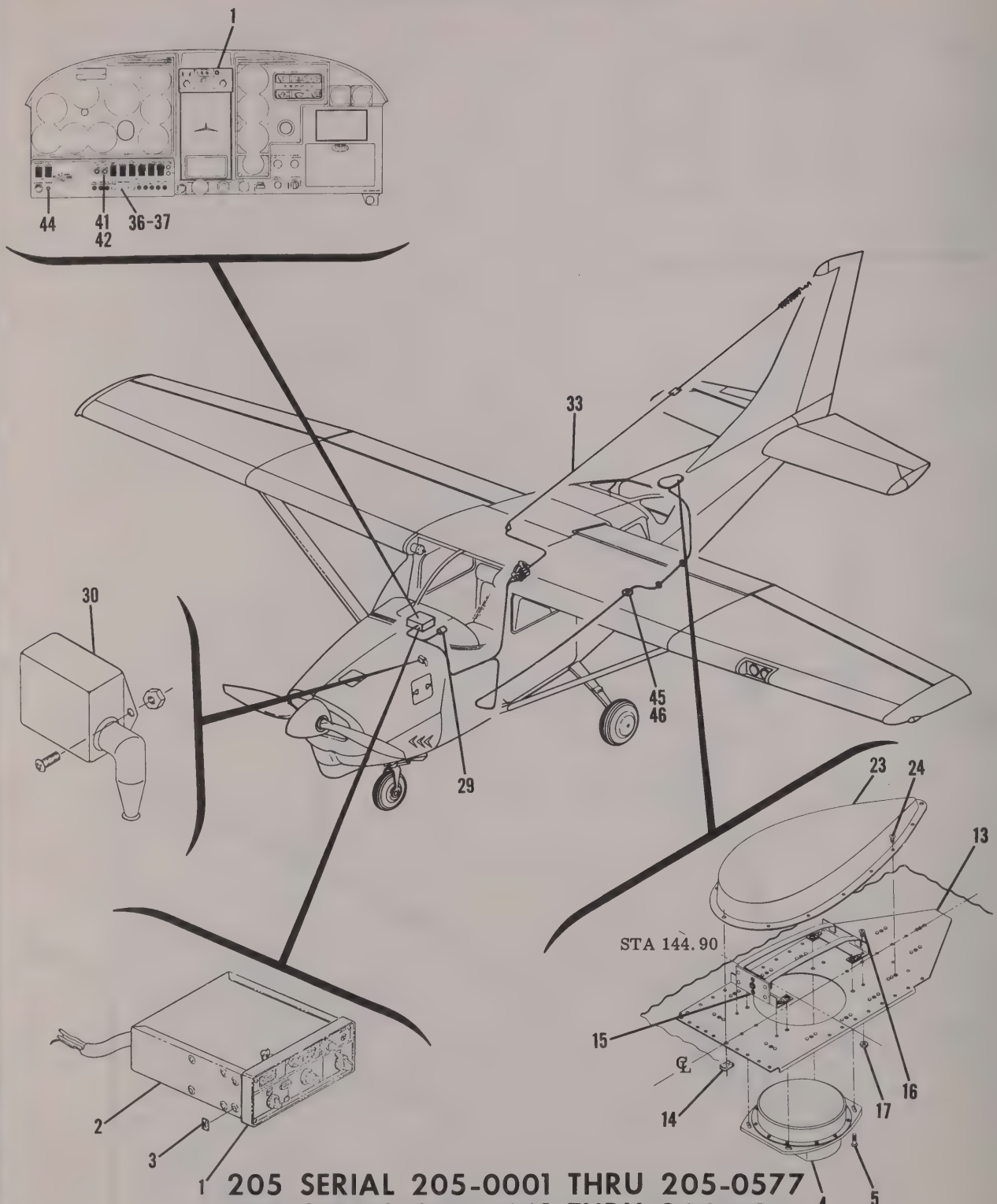


205 SERIAL 205-0001 THRU 205-0577
206 SERIAL 206-0001 THRU 206-0275
210 SERIAL 21058111 THRU 21058510

Figure 2-1. Cessna ADF 300 (Type 521A) Radio Installation - Sheet 5

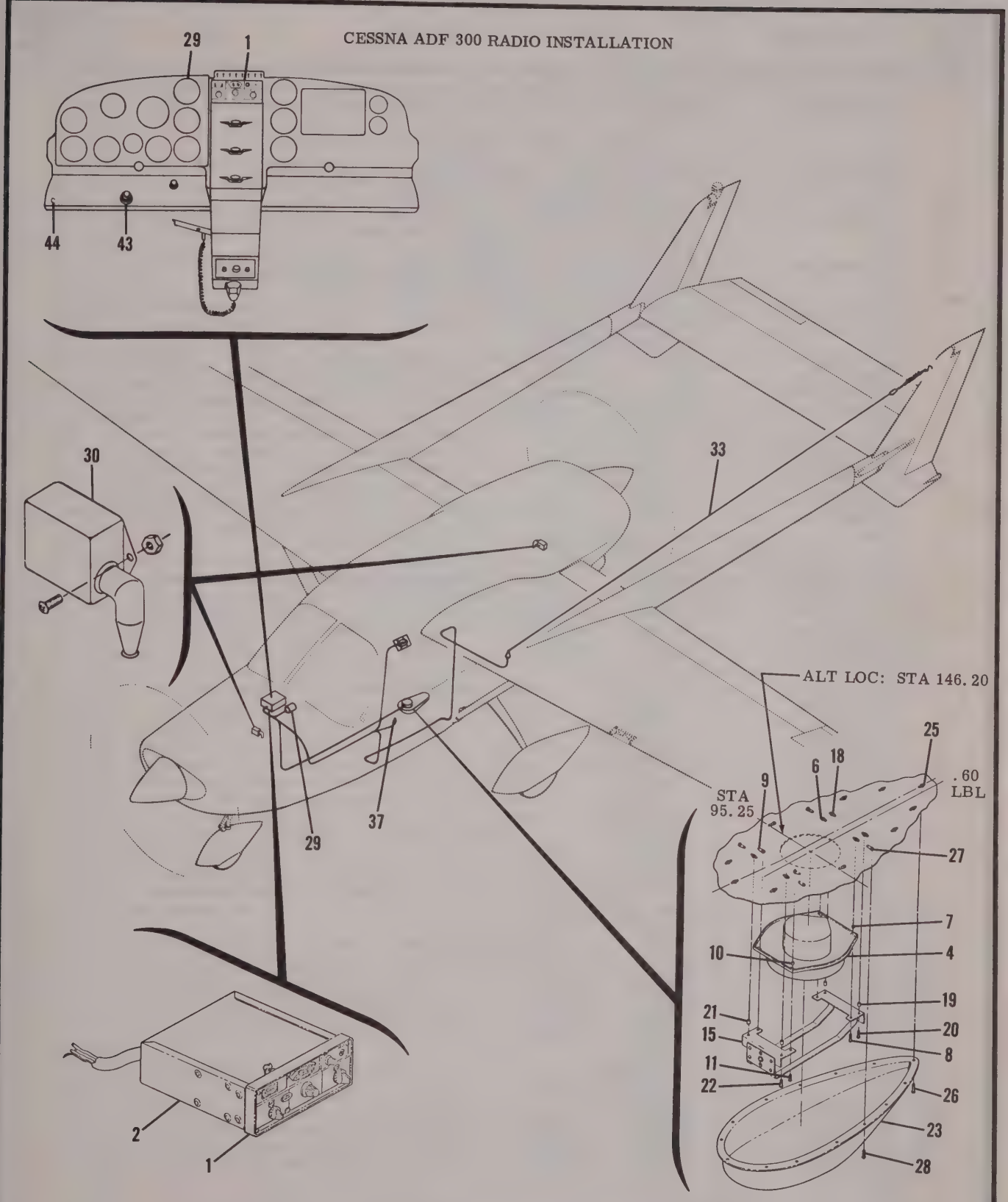


## 336 SERIAL 336-0001 THRU 336-0195

Figure 2-1. Cessna ADF 300 (Type 521A) Radio Installation - Sheet 6

| FIGURE AND INDEX NO. | PART NUMBER | DESCRIPTION<br>1 2 3 4 5 6 7 | UNITS PER ASSY | USABLE ON CODE |
|---|---|---|---|---|
| 2-1- | | CESSNA ADF 300 - TYPE 521A - RADIO INSTALLATION---------- | N/P | |
| - 1 | 28340-1200 | * TUNER-WITHOUT BFO - TYPE R-521A-12 - 14 & 28 VOLT ---------<br>THRU<br>1964 ONLY - WHEN EXHAUSTED USE 28340-1500 TYPE R-521A-15 | A/R<br>• | |
| | 28340-1300 | * TUNER-WITH BFO - TYPE R-521A-13 - 14 & 28 VOLT ---------<br>THRU 1964 ONLY - WHEN EXHAUSTED USE 28340-1500 TYPE R-521A-14 | A/R | |
| | 28340-1500 | * TUNER-WITHOUT BFO - TYPE R-521A-15 - 14 & 28 VOLT ---------<br>1965 & ON AND ALL SPARES WHEN 28340-1200 - TYPE R-521A-12 IS EXHAUSTED | A/R | |
| | 28340-1400 | * TUNER-WITH BFO - TYPE R-521A-14 - 14 & 28 VOLT ---------<br>1965 & ON AND ALL SPARES WHEN 28340-1300 - TYPE R-521A-13 IS EXHAUSTED | A/R | |
| - 2 | 29280-1014 | * MOUNTING & CABLE ASSY - 14 VOLT ---------- | A/R | |
| | 29280-1028 | * MOUNTING & CABLE ASSY - 28 VOLT ---------- | A/R | |
| | | ATTACHING PARTS | | |
| | S1022Z6-6 | SCREW ALL MODELS EXCEPT 336 ---------- | 4 | |
| - 3 | NAS446-2-3 | NUT ALL MODELS EXCEPT 336 ---------- | 4 | |
| | AN507-632R6 | SCREW 336 ONLY ---------- | 4 | |
| | NAS697A06 | NUTPLATE 336 ONLY---------- | 4 | |
| | | ---*--- | | |
| | MS3106A10SL-3S | * RECEPTACLE 3 PIN ---------- | 1 | |
| | MS3106A14S-6S | * RECEPTACLE 6 PIN ---------- | 1 | |
| | AN3106A14S2S | * RECEPTACLE 4 PIN ---------- | 1 | |
| | 29224 | * MOUNTING PLATE---------- | 1 | |
| | 29225 | * CLAMP ---------- | 1 | |
| | 29346 | * RECEPTACLE-TUNER 20 PIN ---------- | 1 | |
| - 4 | 28360 | * LOOP - TYPE L-521A ---------- | 1 | |
| | | ATTACHING PARTS | | |
| - 5 | AN515-8R8 | SCREW ALL MODELS EXCEPT 336 ---------- | 4 | |
| - 6 | NAS697A06LK | NUTPLATE - REPLACES NUT PLATES ON COMPENSATOR-----336 ONLY | 2 | |
| - 7 | NAS43DD3-8 | SPACER-----336 ONLY ---------- | 2 | |
| - 8 | AN515-6R8 | SCREW 336 ONLY ---------- | 2 | |
| - 9 | NAS696A06LK | NUTPLATE - REPLACES NUTPLATE ON COMPENSATOR 336 ONLY | 2 | |
| - 10 | NAS43DD3-8 | SPACER-----336 ONLY ---------- | 2 | |
| - 11 | AN515-6R10 | SCREW 336 ONLY ---------- | 2 | |
| | | ---*--- | | |
| - 12 | 0770676-1 | DOUBLER ASSY 172, P172 & 182 ONLY ---------- | 1 | |
| | 0770676-2 | DOUBLER ---------- | 1 | |
| | A6195-8Z-3 | SPEEDNUT ---------- | 10 | |
| | A6196-8Z-3 | SPEEDNUT ---------- | 2 | |
| | A8584-8Z-3 | SPEEDNUT ---------- | 2 | |
| -12A | 0412063-1 | DOUBLER ASSY 150 ONLY ---------- | 1 | |
| | 0412063-2 | DOUBLER ---------- | 1 | |
| | A6195-8Z-3 | NUTPLATE ---------- | 14 | |
| | 0412063-3 | STIFFENER 150 ONLY ---------- | 2 | |
| - 13 | 1270446-1 | DOUBLER ASSY 180,185,205,206 & 210 ONLY ---------- | 1 | |
| | 1270446-2 | DOUBLER ---------- | 1 | |
| | A6195-8Z-3 | SPEEDNUT ---------- | 10 | |
| | A6196-8Z-3 | SPEEDNUT ---------- | 3 | |
| - 14 | NAS395-14-3 | NUT 180, 185, 205, 206 & 210 ONLY ---------- | 1 | |
| - 15 | 29687-1000 | * LOOP COMPENSATOR---------- | 1 | |
| | | ATTACHING PARTS | | |
| - 16 | AN515-6R8 | SCREW ALL MODELS EXCEPT 336 ---------- | 4 | |
| - 17 | MS20365-632C | NUT ALL MODELS EXCEPT 336 ---------- | 4 | |
| - 18 | NAS697A06LK | NUTPLATE 336 ONLY---------- | 4 | |
| - 19 | NAS43DD1-12 | SPACER-----336 ONLY ---------- | 2 | |
| - 20 | AN515-6R6 | SCREW 336 ONLY ---------- | 2 | |
| - 21 | NAS43DD1-16 | SPACER-----336 ONLY ---------- | 2 | |
| - 22 | AN515-6R8 | SCREW 336 ONLY ---------- | 2 | |
| | | ---*--- | | |
| - 23 | 30178 | * LOOP HOUSING ---------- | 1 | |
| | | ATTACHING PARTS | | |
| - 24 | S1021Z8-8 | SCREW ---------- | 14 | |
| - 25 | NAS697A06LK | NUTPLATE 336 ONLY---------- | 8 | |
| - 26 | AN515-6R6 | SCREW 336 ONLY ---------- | 8 | |
| - 27 | NAS696A06LK | NUTPLATE 336 ONLY---------- | 6 | |
| - 28 | AN515-6R6 | SCREW 336 ONLY ---------- | 6 | |
| | | ---*--- | | |

CONTINUED ON NEXT PAGE

| FIGURE AND INDEX NO. | PART NUMBER | DESCRIPTION 1 2 3 4 5 6 7 | UNITS PER ASSY | USABLE ON CODE |
|---|---|---|---|---|
| 2-1- 29 | 50310 | * INDICATOR WHEN EXHAUSTED USE 27500 ---------- ATTACHING PARTS | 1 | |
| | AN515B6R10 | SCREW ---------- ---*--- | 4 | |
| - 30 | | RADIO NOISE FILTERS SEE FIGURE 10-5 ---------- | A/R | |
| - 31 | | DELETED MOVED TO FIGURE 10-5 ---------- | | |
| - 32 | | DELETED MOVED TO FIGURE 10-5 ---------- | | |
| - 33 | | ADF SENSE ANTENNA INSTALLATION-----SEE FIGURE 8-6 ---------- | 1 | |
| - 34 | S1090-2 | FUSE HOLDER-----172 & P172 THRU 1963 & ALL 150 MODELS ---- | 1 | |
| | S1090-11 | CAP-5A 172 & P172 THRU 1963 & ALL 150 MODELS | 1 | |
| | S1091-5 | FUSE 172 & P172 THRU 1963 & ALL 150 MODELS ---------- | 1 | |
| - 35 | PSM-5N | CIRCUIT BREAKER 180 & 185 THRU 1963 ONLY ---------- | 1 | |
| - 36 | S1232-5 | CIRCUIT BREAKER 182, 205 & 210 THRU 1963 ONLY ---------- | 1 | |
| - 37 | S1360-5 | CIRCUIT BREAKER ALL MODELS EXCEPT 150 1964 & ON ---- | 1 | |
| - 38 | 0413126-9 | RHEOSTAT 172 & P172 THRU 1963 ONLY ---------- | 1 | |
| - 39 | 0413126-5 | RHEOSTAT 180 & 185 ALL MODELS & 150, 172 1964 & ON ---- | 1 | |
| - 40 | 0413126-3 | KNOB-RHEOSTAT 180 & 185 ALL MODELS & 150, 172 ---------- 1964 & ON | 1 | |
| -40A | S1390-3 | KNOB-RHEOSTAT 150 & 172 1964 & ON ---------- | 1 | |
| - 41 | R-12 1/2-75-RS34 | RHEOSTAT 182,205,206 & 210 ONLY---------- | 1 | |
| - 42 | S1163-2 | KNOB-RHEOSTAT 182,205,206 & 210 ONLY---------- | 1 | |
| - 43 | | DROPPING RESISTOR-FLT INST & RADIO DIAL LT 336 ONLY-SEE FIGURE 10-2 | 1 | |
| | 0770039-1 | HEADSET ASSY ---------- | 1 | |
| - 44 | S1103-1 | PHONE JACK ---------- | 1 | |
| - 45 | MS35489-12S | GROMMET 210 ONLY ---------- | 2 | |
| - 46 | S1261-1 | COVER PLATE-----210 ONLY ---------- | 2 | |

NOTE. THE SPEAKER INSTALLATION IS NOT CALLED OUT SINCE THE ADF PHONE OUTPUT MUST BE CONNECTED TO AN EXTERNAL AMPLIFIER SUCH AS AN ISOLATION AMPLIFIER OR THE AMPLIFIER ASSOCIATED WITH A VHF TRANSMITTER FOR SPEAKER OPERATION. FOR THESE CALLOUTS REFER TO DESIRED RADIO COMBINATION.

* ITEMS MARKED WITH ASTERISK SUPPLIED WHEN COMPLETE RADIO IS PURCHASED.

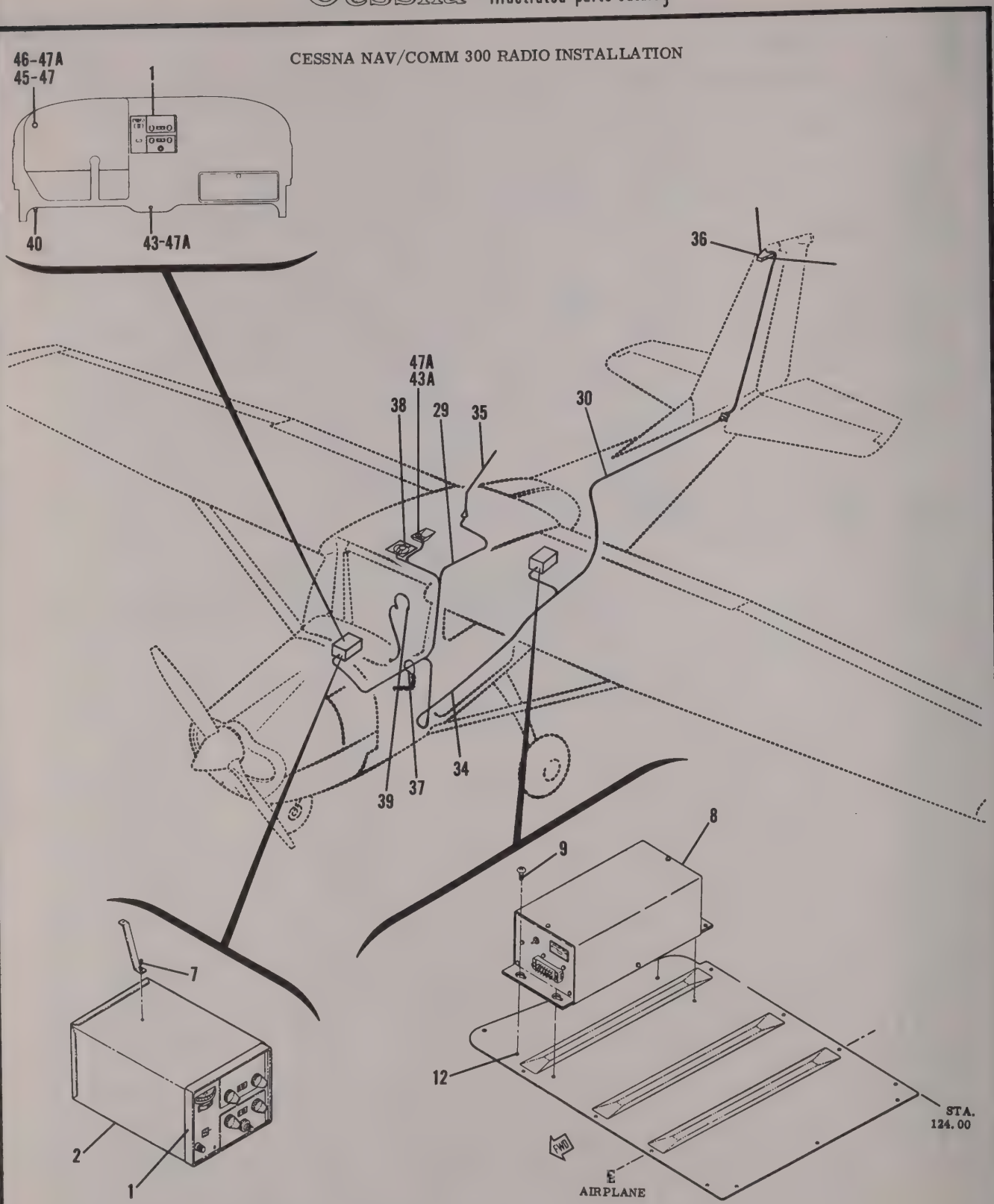


**172 - 1963 MODELS ONLY**
**P172 - 1963 MODELS ONLY**

Figure 2-2. Cessna Nav/Comm 300 (Type 513A) Radio Installation - Sheet 1

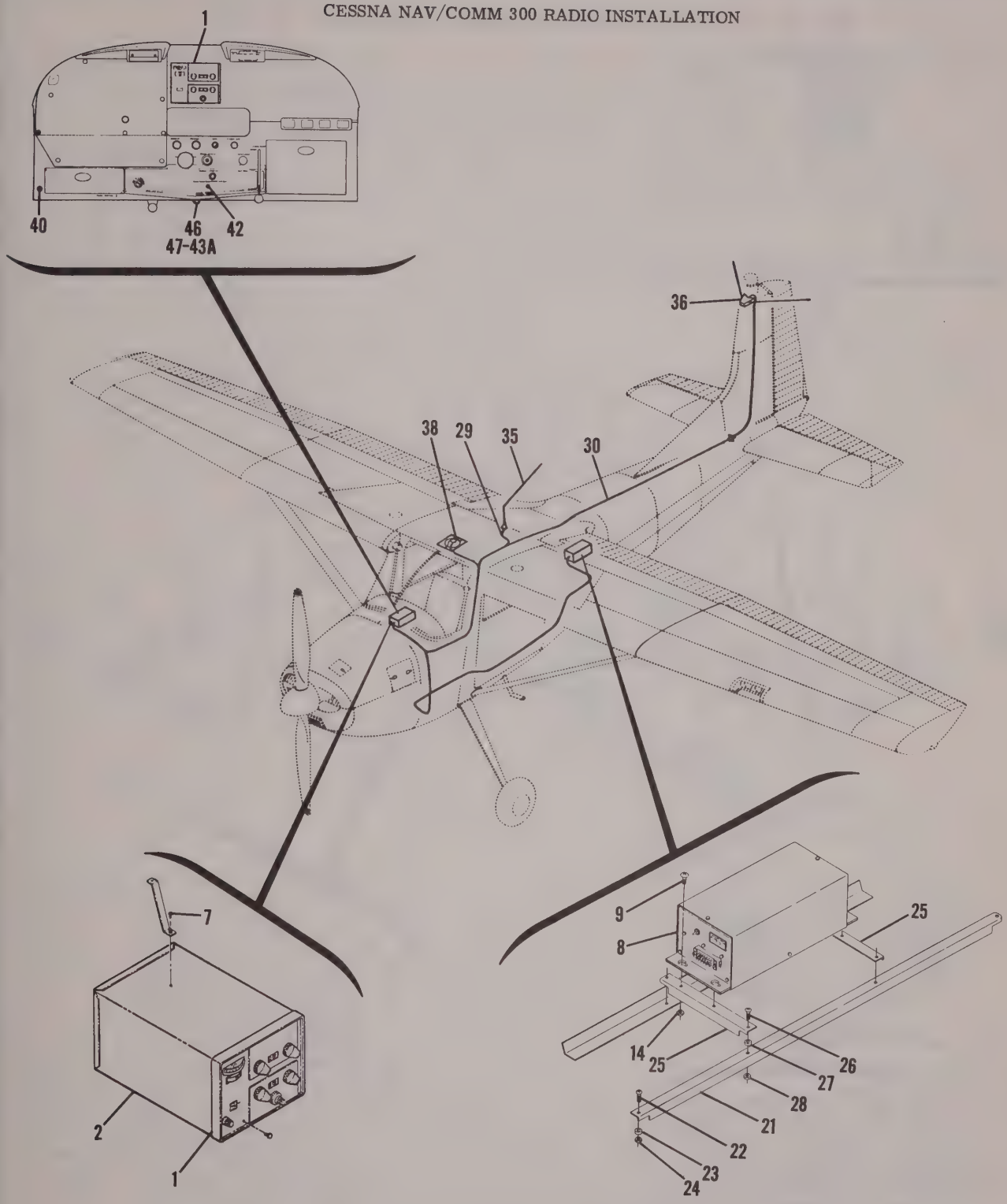


## 180 - 1963 MODELS ONLY
## 185 - 1963 MODELS ONLY

Figure 2-2. Cessna Nav/Comm 300 (Type 513A) Radio Installation - Sheet 2

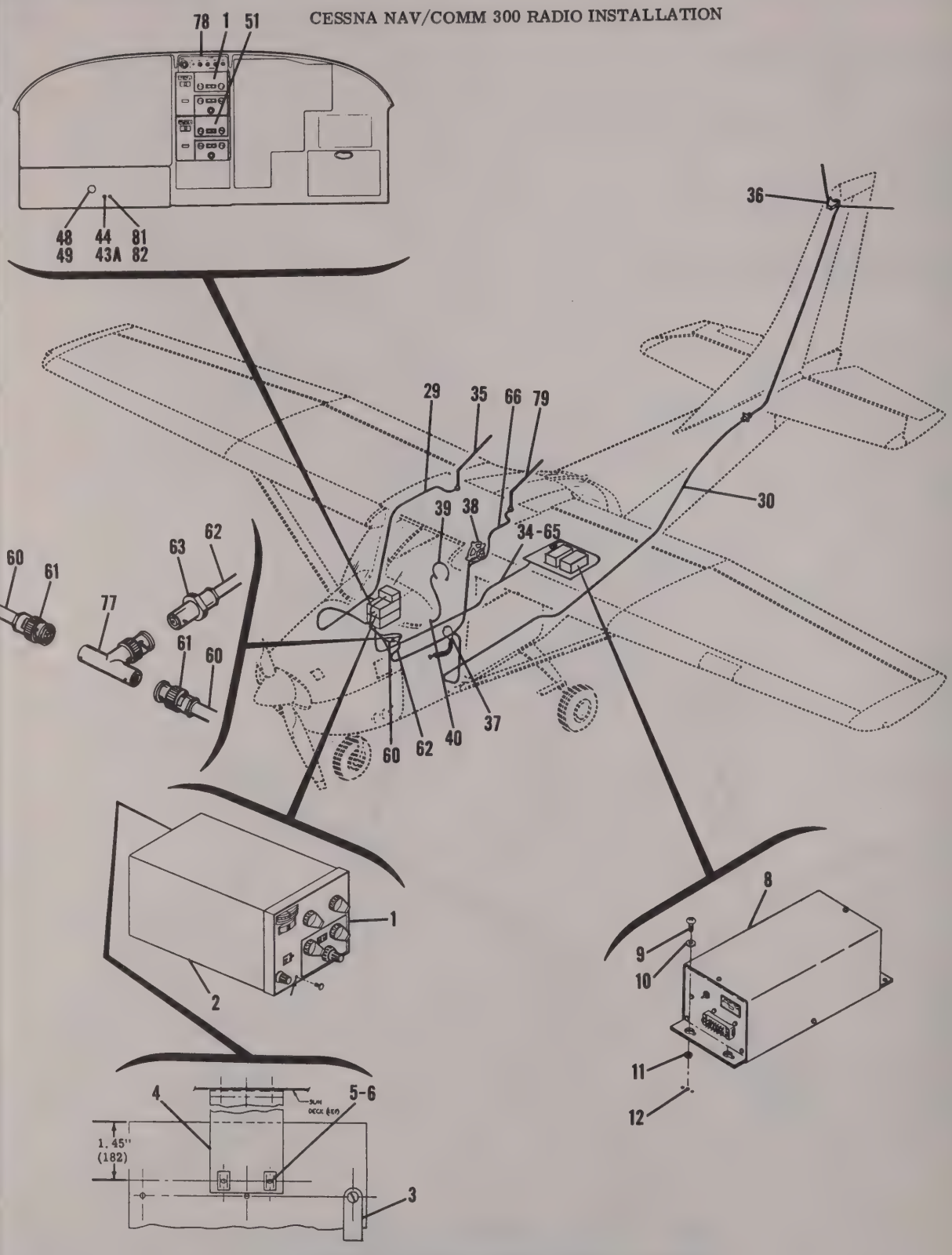


Figure 2-2. Cessna Nav/Comm 300 (Type 513A) Radio Installation - Sheet 3

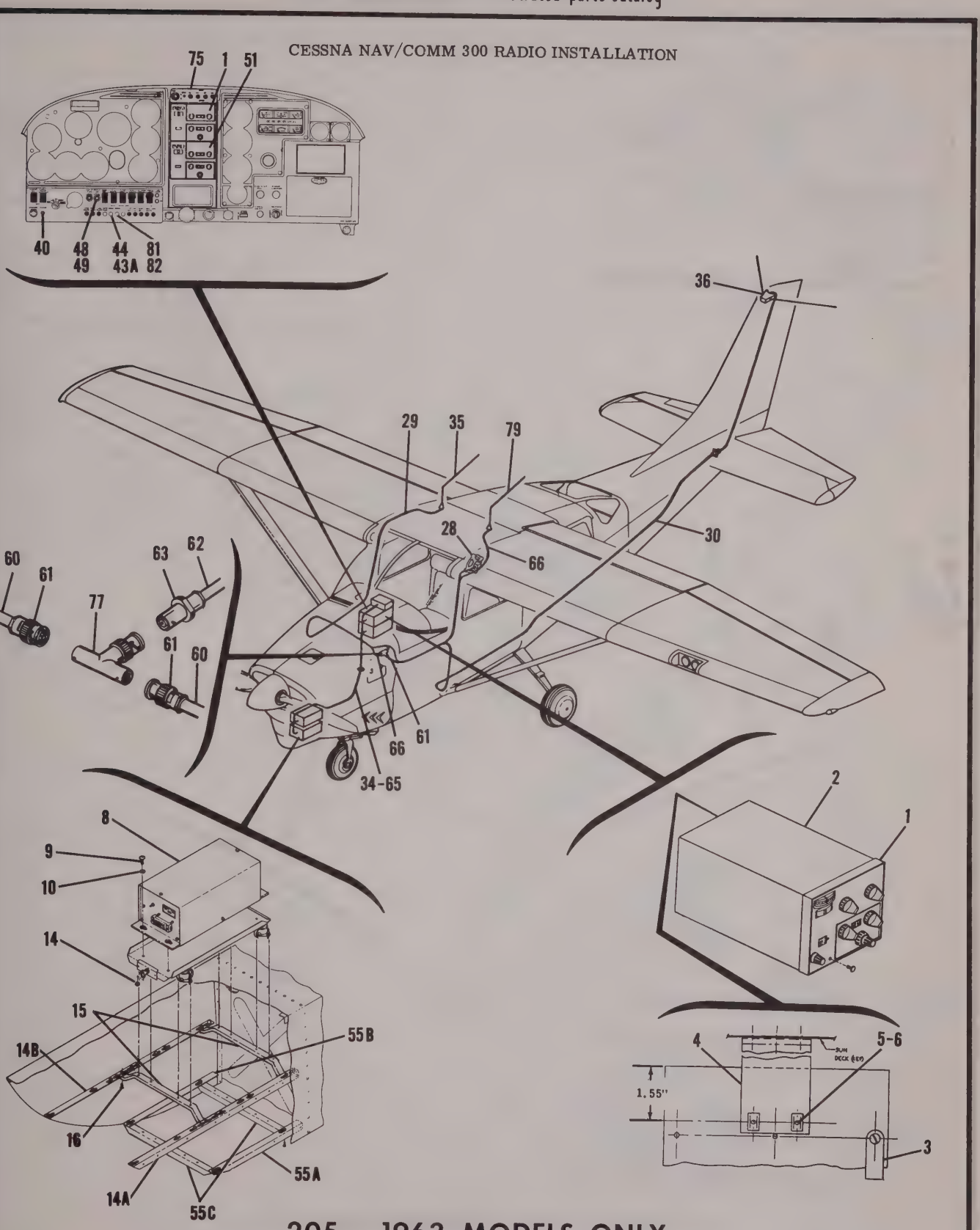


Figure 2-2. Cessna Nav/Comm 300 (Type 513A) Radio Installation - Sheet 4

CESSNA NAV/COMM 300 RADIO INSTALLATION

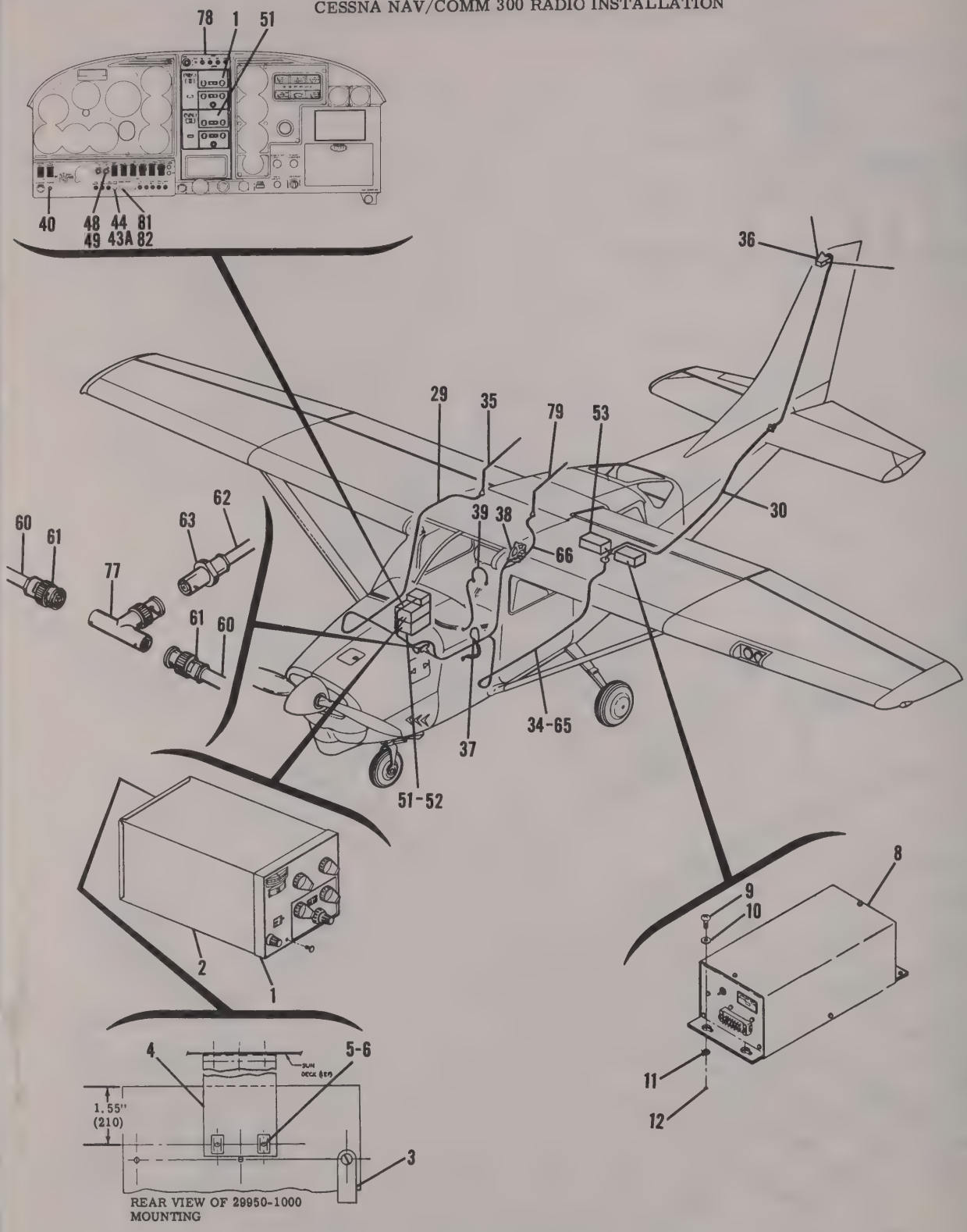


## 210 - 1963 MODELS ONLY

Figure 2-2. Cessna Nav/Comm 300 (Type 513A) Radio Installation - Sheet 5

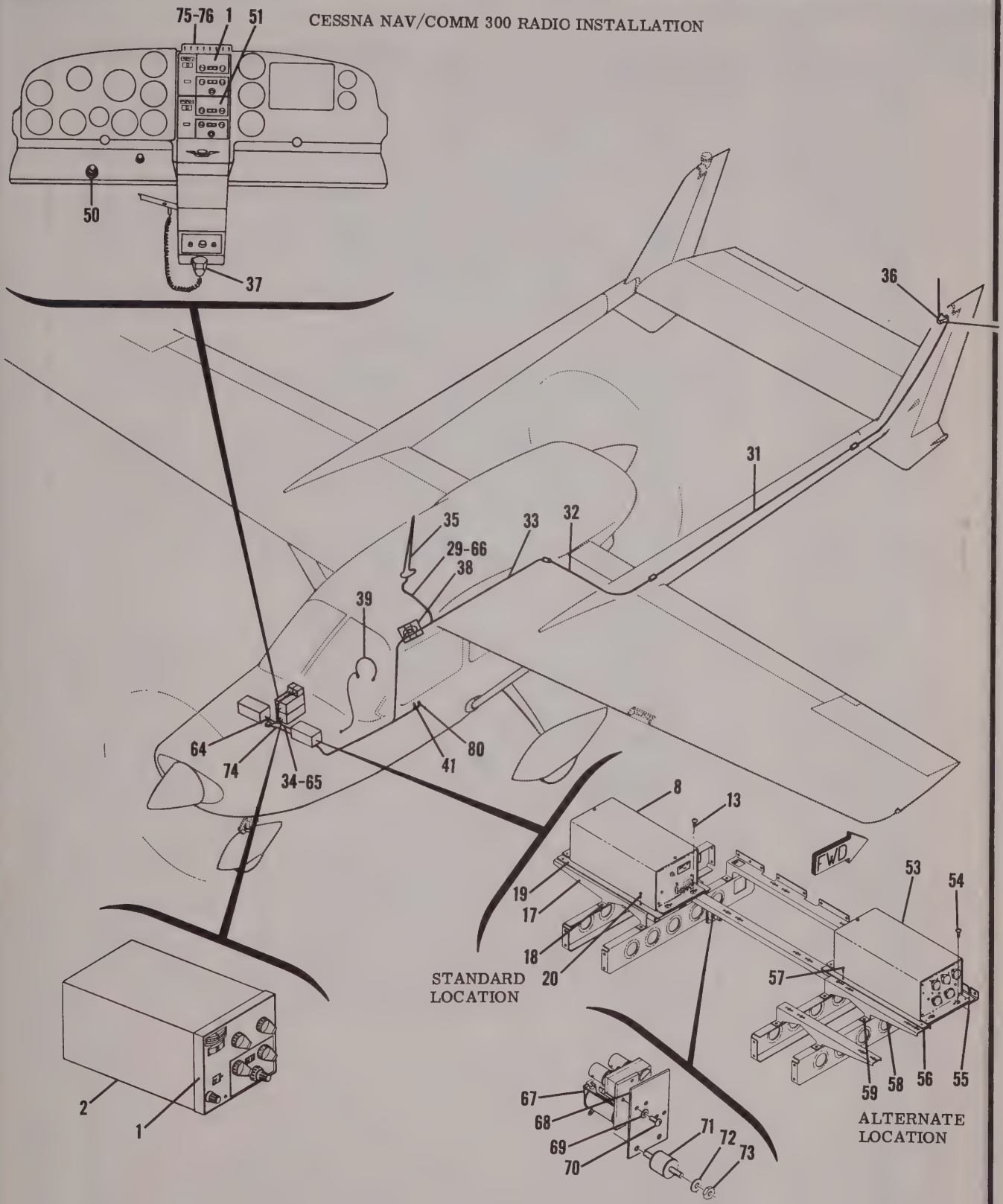


## 336 - EARLY 1964 MODELS ONLY

Figure 2-2. Cessna Nav/Comm 300 (Type 513A) Radio Installation - Sheet 6

| FIGURE AND INDEX NO. | PART NUMBER | DESCRIPTION<br>1 2 3 4 5 6 7 | UNITS PER ASSY | USABLE ON CODE |
|---|---|---|---|---|
| 2-2- | | RADIO INSTALLATION-CESSNA NAV/COMM 300-TYPE 513A---------- | NP | |
| - 1 | 29360-1014 | * TRANSCEIVER-14 VOLT SYSTEM ALL MODELS EXCEPT 336------ | 1 | |
| | 29360-0028 | * TRANSCEIVER-28 VOLT SYSTEM 336 ONLY---------- | 1 | |
| | | ATTACHING PARTS | | |
| - 2 | 29950-1000 | * MOUNTING---------- | 1 | |
| | NAS446-2-3 | NUT ALL MODEL EXCEPT 205, & 336---------- | 4 | |
| | NAS446-4-3 | NUT 205 ONLY---------- | 4 | |
| | NAS697A06L | NUTPLATE 336 ONLY---------- | 4 | |
| | S1022Z6-6 | SCREW ALL MODELS EXCEPT 205 & 336 ONLY---------- | 4 | |
| | S1022Z8-6 | SCREW 205 ONLY---------- | 4 | |
| | AN507-632R6 | SCREW 336 ONLY---------- | 4 | |
| - 3 | 30293 | * ACCESSORY KIT 182, 205 & 210 ONLY---------- | 1 | |
| - 4 | 0770682-1 | SUPPORT 182, 205 & 210 ONLY---------- | 1 | |
| | | ATTACHING PARTS | | |
| - 5 | S1021Z8-6 | SCREW 182, 205 & 210 ONLY---------- | 2 | |
| - 6 | NAS446-4-3 | NUT 182, 205 & 210 ONLY---------- | 2 | |
| | | ---*--- | | |
| - 7 | S1021Z8-8 | SCREW 172, P172, 180 & 185 ONLY---------- | 1 | |
| | | ---*--- | | |
| - 8 | 29370-0014 | * REMOTE UNIT-14 VOLT SYSTEM ALL MODELS EXCEPT 336------ | 1 | |
| | 29370-0028 | * REMOTE UNIT-28 VOLT SYSTEM 336 ONLY---------- | 1 | |
| | | ATTACHING PARTS | | |
| - 9 | AN515-8R16 | SCREW ALL MODELS EXCEPT 336---------- | 4 | |
| - 10 | AN960-10 | WASHER 182, 205 & 210 ONLY---------- | 4 | |
| - 11 | AN936A8 | WASHER 182 & 210 ONLY---------- | 4 | |
| - 12 | A8K75 | RIVNUT 172, P172, 182 & 210 ONLY---------- | 4 | |
| - 13 | AN520-10R7 | SCREW 336 ONLY---------- | 4 | |
| - 14 | MS3065-832C | NUT 180, 185 & 205 ONLY---------- | 4 | |
| | | ---*--- | | |
| -14A | 1270627-85 | SIDE ANGLE ASSY LH 205 ONLY---------- | 1 | |
| -14B | 1270627-86 | SIDE ANGLE ASSY RH 205 ONLY---------- | 1 | |
| - 15 | 1270646-1 | ATTACH ANGLE 205 ONLY---------- | 2 | |
| | | ATTACHING PARTS | | |
| - 16 | AN520-10R6 | SCREW 205 ONLY---------- | 4 | |
| | | ---*--- | | |
| - 17 | 1470056-9 | SUPPORT ASSY 336 ONLY---------- | 2 | |
| | 1470056-8 | SUPPORT---------- | 2 | |
| | NAS686A3 | NUTPLATE---------- | 8 | |
| | | ATTACHING PARTS | | |
| - 18 | AN515-8R6 | SCREW---------- | 8 | |
| | AN960-8 | WASHER---------- | 8 | |
| | MS20365-832C | NUT ---------- | 8 | |
| | | ---*--- | | |
| - 19 | 1470127-1 | PLATE ASSY 336 ONLY---------- | 1 | |
| | 1470127-2 | PLATE---------- | 1 | |
| | NAS686A3 | NUTPLATE---------- | 4 | |
| | | ATTACHING PARTS | | |
| - 20 | AN515-8R6 | SCREW---------- | 4 | |
| | | ---*--- | | |
| - 21 | 0770049-1 | ANGLE 180 & 185 ONLY---------- | 1 | |
| | | ATTACHING PARTS | | |
| - 22 | AN515-8R10 | SCREW---------- | 2 | |
| - 23 | S355 | SPACER---------- | 2 | |
| - 24 | MS20365-832C | NUT ---------- | 2 | |
| | | ---*--- | | |
| - 25 | 0511030-7 | ANGLE 180 & 185 ONLY---------- | 2 | |
| | | ATTACHING PARTS | | |
| - 26 | AN515-8R10 | SCREW---------- | 4 | |
| - 27 | S355 | SPACER---------- | 4 | |
| - 28 | MS20365-832C | NUT ---------- | 4 | |
| | | ---*--- | | |

CONTINUED ON NEXT PAGE

| FIGURE AND INDEX NO. | PART NUMBER | DESCRIPTION 1 2 3 4 5 6 7 | UNITS PER ASSY | USABLE ON CODE |
|---|---|---|---|---|
| 2-2- 29 | | CABLE ASSY-TRANSMITTER ANT TO TRANSCEIVER---------- | NP | |
| | RG-58A/U | COAXIAL CABLE---------- | AR | |
| | UG-1050/U | PLUG-COAXIAL---------- | 1 | |
| | S1367-1-10 | TERMINAL 182, 205 & 210 ONLY---------- | 1 | |
| | S1367-2-8 | TERMINAL 182, 205 & 210 ONLY---------- | 1 | |
| | UG-88C/U | PLUG-COAXIAL 336 ONLY---------- | 1 | |
| - 30 | | CABLE ASSY-BALUN STUB TO TRANSCEIVER ALL MODELS EXCEPT 336 | NP | |
| | RG-58A/U | COAXIAL CABLE-BULK ITEM---------- | AR | |
| | UG-88C/U | PLUG-COAXIAL 180, 182, 185, 205 & 210 ONLY---------- | 1 | |
| | UG-291/U | RECEPTACLE-COAXIAL 172 & P172 ONLY---------- | 1 | |
| | 29753 | RECEPTACLE COAXIAL---------- | 1 | |
| - 31 | | CABLE ASSY-BOOM CONNECTION TO BALUN STUB 336 ONLY----- | NP | |
| | RG-58A/U | COAXIAL CABLE-BULK ITEM---------- | AR | |
| | UG-89/U | RECEPTACLE-COAXIAL---------- | 1 | |
| | UG-88C/U | PLUG-COAXIAL---------- | 1 | |
| - 32 | | CABLE ASSY-WING ROOT TO BOOM CONNECTION-SUPPLIED ON AIRCRAFT AS STANDARD EQUIPMENT 336 ONLY | NP | |
| | RG-58A/U | COAXIAL CABLE-BULK ITEM---------- | 1 | |
| | UG-88C/U | PLUG-COAXIAL---------- | 1 | |
| | UG-89/U | RECEPTACLE-COAXIAL---------- | 1 | |
| - 33 | | CABLE ASSY-TRANSCEIVER TO OMNI CABLE CONNECTION AT WING--- ROOT 336 ONLY | NP | |
| | RG-58A/U | COAXIAL CABLE-BULK ITEM---------- | AR | |
| | UG-88C/U | PLUG-COAXIAL---------- | 1 | |
| | UG-1051/U | PLUG-COAXIAL---------- | 1 | |
| - 34 | | CABLE ASSY-TRANSCEIVER TO REMOTE UNIT---------- | NP | |
| | XMRE265-G-18017 | RECEPTACLE-TRANSCEIVER END---------- | 1 | |
| | MRE345-G-H/VL | RECEPTACLE-REMOTE UNIT END---------- | 1 | |
| | 161548 | CABLE---------- | 1 | |
| - 35 | | VHF TRANSMITTING ANTENNA INSTALLATION SEE FIGURE 8-1-- | 1 | |
| - 36 | | OMNI ANTENNA INSTALLATION SEE FIGURE 8-2---------- | 1 | |
| - 37 | | MICROPHONE INSTALLATION SEE FIGURE 9-4---------- | 1 | |
| - 38 | | SPEAKER INSTALLATION SEE FIGURE 9-3---------- | 1 | |
| | | RADIO NOISE FILTERS SEE FIGURE 10-5---------- | AR | |
| - 39 | 0770039-1 | HEADSET ASSY---------- | 1 | |
| - 40 | S1103-1 | PHONE JACK---------- | 1 | |
| - 41 | S1360-5 | CIRCUIT BREAKER 336 ONLY---------- | 1 | |
| - 42 | PSM-15N | CIRCUIT BREAKER 180 & 185 THRU 1963 ONLY---------- | 1 | |
| - 43 | S1090-4 | FUSE HOLDER 172 & P172 THRU 1963 ONLY---------- | 1 | |
| | S1090-13 | CAP 172 & P172 THRU 1963 ONLY---------- | 1 | |
| | S1091-15 | FUSE 172 & P172 THRU 1963 ONLY---------- | 1 | |
| -43A | S1360-15 | CIRCUIT BREAKER ALL MODELS 1964 & ON EXCEPT 336------- | 1 | |
| - 44 | S1232-15 | CIRCUIT BREAKER 182, 205 & 210 THRU 1963 ONLY---------- | 1 | |
| - 45 | 0413126-9 | RHEOSTAT 172 & P172 THRU 1963 ONLY---------- | 1 | |
| - 46 | 0413126-5 | RHEOSTAT ALL 180 & 185 MODELS & 1964 & ON 172 MODELS-- | 1 | |
| - 47 | 0413126-3 | KNOB-RHEOSTAT ALL 180 & 185 MODELS & THRU 1963 172---- AND P172 MODELS ONLY | 1 | |
| -47A | S1390-3 | KNOB-RHEOSTAT 172 1964 & ON---------- | 1 | |
| - 48 | R-12 1/2-75-RS34 | RHEOSTAT 182, 205 & 210 ONLY---------- | 1 | |
| - 49 | S1163-2 | KNOB-RHEOSTAT 182, 205 & 210 ONLY---------- | 1 | |
| - 50 | | DROPPING RESISTOR-FLT INST & RADIO DIAL LT 336 ONLY-SEE FIGURE 10-2 | 1 | |
| | S1261-1 | COVER PLATE 210 THRU 1963 ONLY---------- | 2 | |
| | MS35489-19S | GROMMET 210 THRU 1963 ONLY---------- | 1 | |
| | 1213614-11 | COVER PLATE 205 ONLY---------- | 2 | |
| | NAS557-10A | GROMMET 205 ONLY---------- | 1 | |

CONTINUED ON NEXT PAGE

| FIGURE AND INDEX NO. | PART NUMBER | DESCRIPTION 1 2 3 4 5 6 7 | UNITS PER ASSY | USABLE ON CODE |
|---|---|---|---|---|
| 2-2- | | DUAL RADIO INSTALLATIONS-THE FOLLOWING PARTS ARE REQUIRED IN ADDITION TO THOSE REQUIRED FOR A SINGLE RADIO INSTALLATION. ITEM 62 REPLACES ITEM 30 AND ITEM 74 REPLACES 29. 182, 205, 210 & 336 ONLY | | |
| - 51 | 29360-1014 | * TRANSCEIVER-14 VOLT SYSTEM ALL MODELS EXCEPT 336------ | 1 | |
| | 29360-0028 | * TRANSCEIVER-28 VOLT SYSTEM 336 ONLY---------- | 1 | |
| | | ATTACHING PARTS | | |
| - 52 | 29950-1000 | * MOUNTING---------- | 1 | |
| | NAS446-2-3 | NUT ALL MODELS EXCEPT 205 & 336---------- | 4 | |
| | NAS446-4-3 | NUT 205 ONLY---------- | 4 | |
| | NAS697A06L | NUTPLATE 336 ONLY---------- | 4 | |
| | S1022Z6-6 | SCREW 182 & 210 ONLY---------- | 4 | |
| | S1022Z8-6 | SCREW 205 ONLY---------- | 4 | |
| | AN507-632R6 | SCREW 336 ONLY---------- | 4 | |
| | 30293 | * ACCESSORY KIT 182, 205 & 210 ONLY---------- | 1 | |
| | | ---*--- | | |
| - 53 | 29370-0014 | * REMOTE UNIT-14 VOLT SYSTEM 182, 205 & 210 ONLY-------- | 1 | |
| | 29370-0028 | * REMOTE UNIT-28 VOLT SYSTEM 336 ONLY---------- | 1 | |
| | | ATTACHING PARTS | | |
| | AN515-8R16 | SCREW ALL MODELS EXCEPT 336---------- | 4 | |
| | AN960-10 | WASHER ALL MODELS EXCEPT 336---------- | 4 | |
| | AN936A8 | WASHER 182 & 210 ONLY---------- | 1 | |
| | MS20365-832C | NUT 205 ONLY---------- | 4 | |
| - 54 | AN520-10R7 | SCREW 336 ONLY---------- | 4 | |
| | | ---*--- | | |
| - 55 | 1470056-1 | SUPPORT ASSY REPLACES 1413501-18 SUPPORT ON RIGHT SIDE OF- SHIP 336 ONLY | 1 | |
| | 1470056-2 | SUPPORT---------- | 1 | |
| | NAS686A3 | NUTPLATE---------- | 3 | |
| | NAS687A08 | NUTPLATE---------- | 1 | |
| | | ATTACHING PARTS | | |
| | AN515-8R6 | SCREW---------- | 2 | |
| | AN960-8 | WASHER---------- | 2 | |
| | MS20365-832C | NUT ---------- | 2 | |
| | | ---*--- | | |
| -55A | 1270627-41 | SIDE ANGLE ASSY LH 205 ONLY---------- | 1 | |
| | 1270627-43 | SIDE ANGLE---------- | 1 | |
| | NAS696A3 | NUTPLATE---------- | 2 | |
| -55B | 1270627-42 | SIDE ANGLE ASSY RH 205 ONLY---------- | 1 | |
| | 1270627-44 | SIDE ANGLE---------- | 1 | |
| | NAS696A3 | NUTPLATE---------- | 2 | |
| -55C | 1270627-75 | ATTACH ANGLE 205 ONLY---------- | 2 | |
| | | ATTACHING PARTS | | |
| | AN520-10R6 | SCREW---------- | 4 | |
| | | ---*--- | | |
| - 56 | 1470127-1 | PLATE ASSY 336 ONLY---------- | 1 | |
| | 1470127-2 | PLATE---------- | 1 | |
| | NAS686A3 | NUTPLATE---------- | 4 | |
| | | ATTACHING PARTS | | |
| - 57 | AN515-8R6 | SCREW---------- | 4 | |
| | | ---*--- | | |
| - 58 | 1470056-4 | SUPPORT ASSY 336 ONLY---------- | 1 | |
| | 1470056-5 | SUPPORT---------- | 1 | |
| | NAS686A3 | NUTPLATE---------- | 6 | |
| | NAS687A08 | NUTPLATE---------- | 2 | |
| | | ATTACHING PARTS | | |
| - 59 | AN515-8R6 | SCREW---------- | 4 | |
| | AN960-8 | WASHER---------- | 4 | |
| | MS20365-832C | NUT ---------- | 4 | |
| | | ---*--- | | |

CONTINUED ON NEXT PAGE

| FIGURE AND INDEX NO. | PART NUMBER | DESCRIPTION<br>1 2 3 4 5 6 7 | UNITS PER ASSY | USABLE ON CODE |
|---|---|---|---|---|
| 2-2- 60 | | CABLE ASSY-TRANSCEIVER TO OMNI TEE CONNECTOR 182, 205- & 210 ONLY | NP | |
| | RG-58A/U | COAXIAL CABLE-EACH LEAD TO BE 33 INCHES LONG-BULK ITEM-- | 2 | |
| | UG-1051/U | RECEPTACLE-COAXIAL | 1 | |
| - 61 | UG-88C/U | PLUG-COAXIAL | 1 | |
| - 62 | | CABLE ASSY-OMNI TEE CONNECTOR TO BALUN STUB REPLACES-- ITEM 30 182, 205 & 210 ONLY | NP | |
| | RG-58A/U | COAXIAL CABLE-BULK ITEM | AR | |
| - 63 | UG-88C/U | PLUG-COAXIAL | 1 | |
| | UG-89/U | RECEPTACLE-COAXIAL | 1 | |
| - 64 | | CABLE ASSY-OMNI LEAD FROM TRANSCEIVER #1 TO TRANSCEIVER #2 336 ONLY | NP | |
| | RG-58A/U | COAXIAL CABLE-BULK ITEM | AR | |
| | UG-1051/U | PLUG-COAXIAL | 2 | |
| - 65 | | CABLE ASSY-TRANSCEIVER TO REMOTE UNIT | NP | |
| | XMRE265-G-18017 | RECEPTACLE-TRANSCEIVER END | 1 | |
| | MRE345-G-H/VL | RECEPTACLE-REMOTE END | 1 | |
| | 161548 | CABLE | 1 | |
| - 66 | | CABLE ASSY-TRANSMITTER ANT TO TRANSCEIVER | NP | |
| | RG-58A/U | COAXIAL CABLE-BULK ITEM | AR | |
| | UG-1050/U | PLUG-COAXIAL 182, 205 & 210 ONLY | 1 | |
| | S1367-1-10 | TERMINAL 182, 205 & 210 ONLY | 1 | |
| | S1367-2-8 | TERMINAL 182, 205 & 210 ONLY | 1 | |
| | UG-88C/U | PLUG-COAXIAL 336 ONLY | 1 | |
| | UG-88C/U | PLUG-COAXIAL 336 ONLY | 1 | |
| | 1470075-1 | ANTENNA RELAY INSTALLATION VHF 336 ONLY | 1 | |
| - 67 | 0813626-2 | ANTENNA RELAY<br>ATTACHING PARTS | 1 | |
| - 68 | 0812534-2 | RELAY BRACKET | 1 | |
| - 69 | AN960A4 | WASHER | 4 | |
| - 70 | AN515-4R4 | SCREW | 4 | |
| - 71 | 0411059-1 | SHOCKMOUNT | 2 | |
| - 72 | AN936A8 | WASHER | 4 | |
| - 73 | AN340-8 | NUT<br>---*--- | 4 | |
| - 74 | | CABLE ASSY-ANT RELAY TO XMTR #1 & #2 REPLACES ITEM 29- WHEN DUAL RADIOS ARE INSTALLED 336 ONLY | NP | |
| | RG-58A/U | COAXIAL CABLE-BULK ITEM | AR | |
| | UG-88C/U | PLUG-COAXIAL | 2 | |
| | UG-1050/U | PLUG-COAXIAL | 1 | |
| | | TRANSMITTER SELECTOR SWITCH SEE FIGURE 9-1 336 ONLY | 1 | |
| - 75 | 8867K4 | MICROPHONE SELECTOR SWITCH SEE FIGURE 9-1 336 ONLY | 1 | |
| - 76 | 8866K1 | COMM #1 & COMM #2 SELECTOR SWITCHES SEE FIGURE 9-1-- 336 ONLY | AR | |
| - 77 | UG-274/U | TEE ADAPTER OMNI 182, 205 & 210 ONLY | 1 | |
| - 78 | | TRANSMITTER SELECTOR SWITCH ASSY SEE FIGURE 9-1 182, 205 & 210 ONLY<br>---*--- | 1 | |
| | | RADIO COOLING INSTALLATION SEE FIGURE 10-1 | 1 | |
| - 79 | | VHF TRANSMITTING ANTENNA SEE FIGURE 8-1 182, 205,- 206 & 210 ONLY | 1 | |
| - 80 | S1360-5 | CIRCUIT BREAKER 336 ONLY | 1 | |
| - 81 | S1232-15 | CIRCUIT BREAKER 182, 205 & 210 THRU 1963 | 1 | |
| - 82 | S1360-15 | CIRCUIT BREAKER 182, 205, & 210 1964 & ON | 1 | |

* ITEMS MARKED WITH ASTERISK SUPPLIED WHEN COMPLETE RADIO IS PURCHASED

CESSNA NAV-O-MATIC 200 INSTALLATION

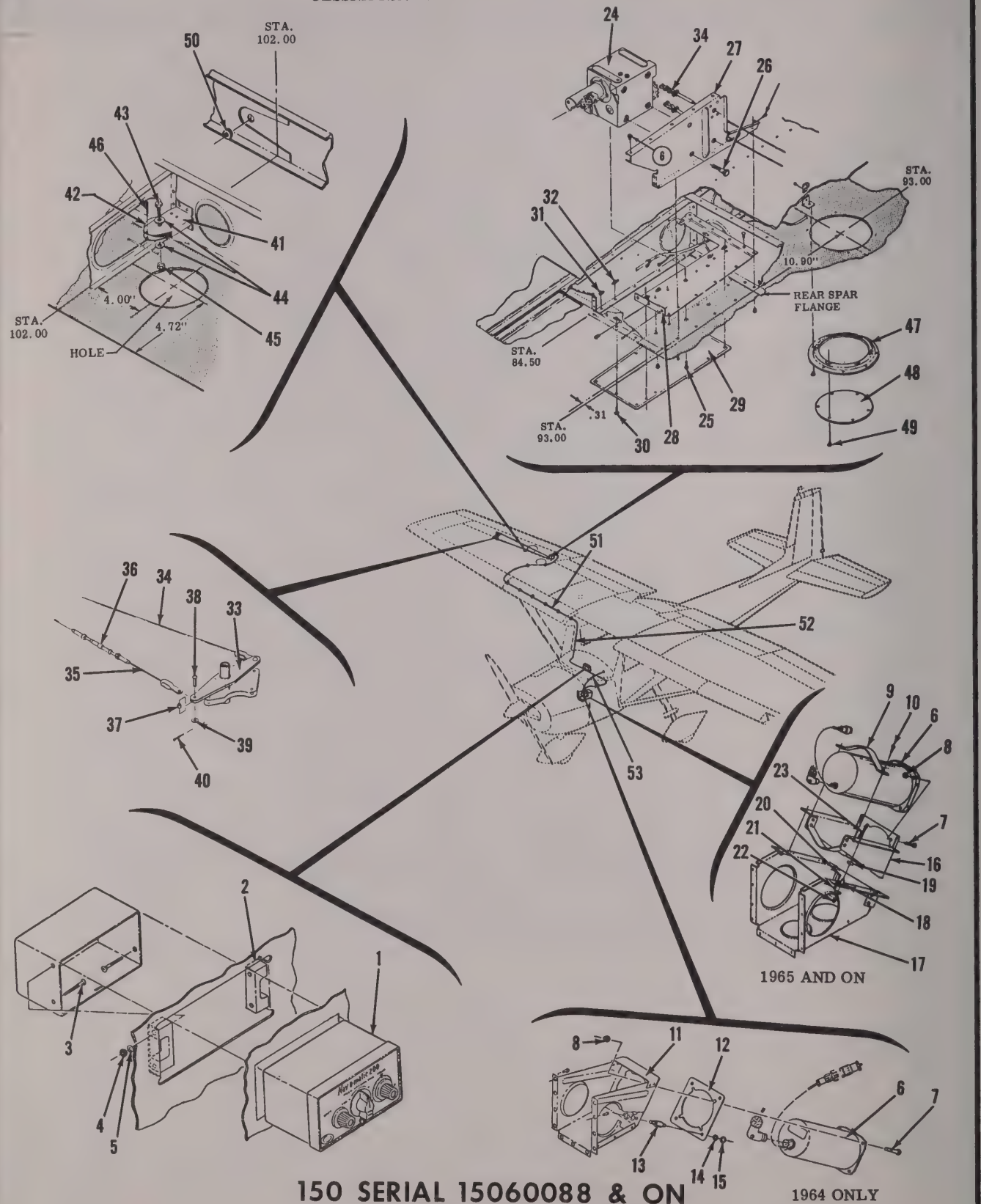


**150 SERIAL 15060088 & ON**

Figure 2-3. Cessna Nav-O-Matic 200 Installation

| FIGURE AND INDEX NO. | PART NUMBER | DESCRIPTION<br>1 2 3 4 5 6 7 | UNITS PER ASSY | USABLE ON CODE |
|---|---|---|---|---|
| 2-3- | | CESSNA NAV-O-MATIC 200 INSTALLATION 150 ONLY | N/P | |
| - 1 | 30340-1114 | CONTROLLER AMPLIFIER - 14 VOLT | 1 | |
| | | ATTACHING PARTS | | |
| - 2 | 0713739-1 | SPACER | 4 | |
| - 3 | AN507-632R20 | SCREW | 4 | |
| - 4 | AN960D6 | WASHER | 4 | |
| - 5 | MS20365-632C | NUT | 4 | |
| | | ---*--- | | |
| - 6 | 50320 | RATE GYRO - 14 VOLT | 1 | |
| | | ATTACHING PARTS | | |
| - 7 | AN515-6R12 | SCREW | 4 | |
| - 8 | MS20365-632C | NUT | 4 | |
| - 8A | 0513153-10 | PLACARD | 1 | |
| - 9 | 0770710-5 | RETAINER STRAP USED ONLY WHEN ITEM 16 IS INSTALLED | 1 | |
| - 10 | AN515-8R6 | SCREW USED ONLY WHEN ITEM 16 IS INSTALLED | 2 | |
| | | ---*--- | | |
| - 11 | 1200181-1 | BRACKET ASSY THRU 1964 ONLY WHEN EXHAUSTED<br>USE ITEMS 16 & 17 | 1 | |
| - 12 | 1200181-4 | PLATE-MOUNTING USED ONLY WHEN ITEM 11 IS INSTALLED | 1 | |
| | | ATTACHING PARTS | | |
| - 13 | 0411059-4 | MOUNT | 4 | |
| - 14 | AN936A8B | WASHER | 4 | |
| - 15 | AN340B8 | NUT | 8 | |
| | | ---*--- | | |
| - 16 | 0770710-2 | SUPPORT ASSY 1965 & ON--- REPLACES<br>ITEMS 11 & 12 FOR SPARES WHEN SUPPLY IS EXHAUSTED | 1 | |
| - 17 | 0770710-6 | MOUNTING BRACKET ASSY-----1965 & ON-----REPLACES<br>ITEMS 11 & 12 FOR SPARES WHEN SUPPLY IS EXHAUSTED | 1 | |
| - 18 | S1575-1 | MULTI-PLANE MOUNT 1965 & ON GOOD FOR ALL SPARES----<br>WHEN ITEMS 16 & 17 ARE INSTALLED | 4 | |
| | | ATTACHING PARTS | | |
| - 19 | S1450-2A14-032 | SNUB-WASHER | 8 | |
| - 20 | AN515-6R6 | SCREW | 8 | |
| - 21 | MS20365-632C | NUT | 8 | |
| - 22 | AN515-8R20 | SCREW | 4 | |
| - 23 | MS20365-832C | NUT | 4 | |
| | | ---*--- | | |
| - 24 | 26360-0000 | ACTUATOR | 1 | |
| | | ATTACHING PARTS | | |
| - 25 | AN525-10R9 | SCREW | 2 | |
| - 26 | AN3-4A | BOLT | 4 | |
| | | ---*--- | | |
| - 27 | 1200167-1 | RIB ASSY | 1 | |
| - 28 | 1200169-1 | DOUBLER | 1 | |
| - 29 | 1200168-1 | COVER | 1 | |
| | | ATTACHING PARTS | | |
| - 30 | AN525-832R7 | SCREW | 14 | |
| - 31 | NAS696A08 | NUTPLATE | 3 | |
| - 32 | NAS697A08 | NUTPLATE | 6 | |
| | | ---*--- | | |
| - 33 | 1200180-1 | BELLCRANK ASSY | 1 | |
| - 34 | 1200182-1 | CABLE ASSY | 1 | |
| - 35 | 1200182-2 | CABLE ASSY | 1 | |
| - 36 | AN155-16S | BARREL | 1 | |
| - 37 | 1200182-9 | BUSHING | 2 | |
| | | ATTACHING PARTS | | |
| - 38 | MS20392-2-9 | PIN | 2 | |
| - 39 | AN960-10L | WASHER | 2 | |
| - 40 | MS24665-132 | COTTER PIN | 2 | |
| | | ---*--- | | |
| - 41 | 1200183-1 | BRACKET | 1 | |
| - 42 | S378-3L | PULLEY | 1 | |
| | | ATTACHING PARTS | | |
| - 43 | AN4-10A | BOLT | 1 | |
| - 44 | AN960-416L | WASHER | 2 | |
| - 45 | MS20365-428C | NUT | 1 | |
| - 46 | MS24665-134 | COTTER PIN | 1 | |
| | | ---*--- | | |

CONTINUED ON NEXT PAGE

| FIGURE AND INDEX NO. | PART NUMBER | DESCRIPTION<br>1 2 3 4 5 6 7 | UNITS PER ASSY | USABLE ON CODE |
|---|---|---|---|---|
| 2-3- 47 | S226-5F | DOUBLER | 2 | |
| - 48 | S225-4F | COVER | 2 | |
| | | ATTACHING PARTS | | |
| - 49 | S1022Z8-8 | SCREW | 12 | |
| | | ---*--- | | |
| - 50 | MS35489-10S | GROMMET | | |
| - 51 | | CABLE ASSY ACTUATOR TO WING ROOT | N/P | |
| | 28326-0009 | PLUG | 1 | |
| | 28505-0009 | PLUG | 1 | |
| - 52 | | CABLE ASSY CONTROLLER TO RATE GYRO | N/P | |
| | 28336 | PLUG-----CONNECTS TO CONTROLLER | 1 | |
| | 28326-0009 | PLUG-----CONNECTS TO WING CABLE | 1 | |
| | 50328-0002 | PLUG-----CONNECTS TO RATE GYRO | 1 | |
| - 53 | | CABLE ASSY RATE GYRO TO POWER SOURCE | N/P | |
| | 28460 | PLUG-----CONNECTS TO RATE GYRO | 1 | |
| | S1091-5 | FUSE | 1 | |
| | S1090-11 | CAP-FUSEHOLDER | 1 | |

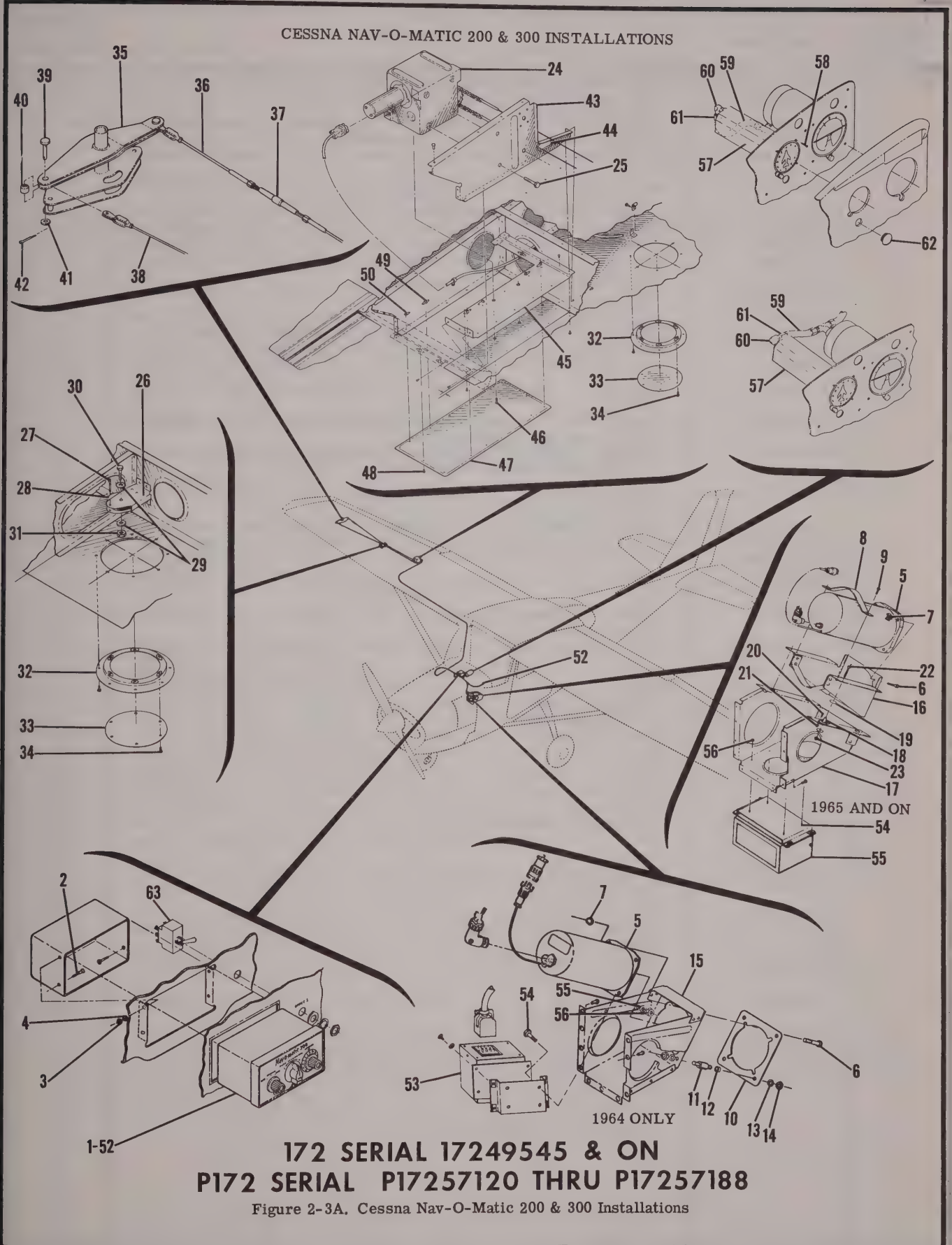


Figure 2-3A. Cessna Nav-O-Matic 200 & 300 Installations

| FIGURE AND INDEX NO. | PART NUMBER | DESCRIPTION<br>1 2 3 4 5 6 7 | UNITS PER ASSY | USABLE ON CODE |
|---|---|---|---|---|
| 2-3A- | | CESSNA NAV-O-MATIC 200 INSTALLATION 172 & P172 ONLY ---- | N/P | |
| - 1 | 30340-1114 | CONTROLLER AMPLIFIER - 14 VOLT---------- | 1 | |
| | | ATTACHING PARTS | | |
| - 2 | AN507-632R20 | SCREW ---------- | 4 | |
| - 3 | AN960-6 | WASHER---------- | 4 | |
| - 4 | MS20365-632C | NUT ---------- | 4 | |
| | | ---*--- | | |
| - 5 | 50320 | RATE GYRO ---------- | 1 | |
| | | ATTACHING PARTS | | |
| - 6 | AN515-8R12 | SCREW ---------- | 4 | |
| - 7 | MS20364-832C | NUT ---------- | 4 | |
| - 8 | 0770710-5 | RETAINER STRAP USED ONLY WHEN ITEM 17 IS INSTALLED ---- | 1 | |
| - 9 | AN515-8R6 | SCREW USED ONLY WHEN ITEM 17 IS INSTALLED---------- | 2 | |
| | | ---*--- | | |
| - 10 | 1200181-4 | PLATE - MOUNTING-----USED ONLY WHEN ITEM 15 IS INSTALLED | 1 | |
| | | ATTACHING PARTS | | |
| - 11 | 0411059-1 | MOUNT - RUBBER ---------- | 4 | |
| - 12 | S355-2 | SPACER---------- | 8 | |
| - 13 | AN936A8B | LOCK WASHER---------- | 8 | |
| - 14 | AN340B8 | NUT ---------- | 8 | |
| | | ---*--- | | |
| - 15 | 1200181-5 | BRACKET THRU 1964 ONLY---- WHEN EXHAUSTED USE --------- | 1 | |
| | | ITEMS 16 & 17 | | |
| - 16 | 0770710-2 | SUPPORT ASSY 1965 & ON---- REPLACES ITEM 15 FOR SPARES | 1 | |
| | | WHEN SUPPLY IS EXHAUSTED | | |
| - 17 | 0511255-1 | MOUNTING BRACKET-----1965 & ON-----REPLACES ITEM 15 FOR---- | 1 | |
| | | SPARES WHEN SUPPLY IS EXHAUSTED | | |
| - 18 | S1575-1 | MULTI - PLANE MOUNT 1965 & ON GOOD FOR ALL SPARES | 4 | |
| | | WHEN ITEMS 16 & 17 ARE INSTALLED | | |
| | | ATTACHING PARTS | | |
| - 19 | S1450-2A14-032 | SNUB - WASHER ---------- | 8 | |
| - 20 | AN515-6R6 | SCREW ---------- | 8 | |
| - 21 | MS20365-632C | NUT ---------- | 8 | |
| - 22 | AN515-8R20 | SCREW ---------- | 4 | |
| - 23 | MS20364-832C | NUT ---------- | 4 | |
| | | ---*--- | | |
| - 24 | 26360-0000 | ACTUATOR ASSEMBLY - 14 VOLT ---------- | 1 | |
| | | ATTACHING PARTS | | |
| - 25 | AN3-4A | BOLT ---------- | 4 | |
| | | ---*--- | | |
| - 26 | 1200183-1 | BRACKET ---------- | 1 | |
| - 27 | MS24665-134 | COTTER PIN ---------- | 1 | |
| - 28 | S378-3L | PULLEY---------- | 1 | |
| | | ATTACHING PARTS | | |
| - 29 | AN960-416L | WASHER - PLAIN ---------- | 2 | |
| - 30 | AN4-10A | BOLT ---------- | 1 | |
| - 31 | MS20365-428C | NUT ---------- | 1 | |
| | | ---*--- | | |
| - 32 | S226-5F | DOUBLER ---------- | 2 | |
| - 33 | S225-4F | COVER ---------- | 2 | |
| | | ATTACHING PARTS | | |
| - 34 | S1022Z8-8 | SCREW ---------- | 12 | |
| | | ---*--- | | |
| - 35 | 1200180-1 | BELLCRANK ASSY ---------- | 1 | |
| - 36 | 1200182-2 | CABLE ASSY ---------- | 1 | |
| | | ATTACHING PARTS | | |
| | MS20392-2-9 | PIN ---------- | 1 | |
| | 1200182-9 | BUSHING ---------- | 1 | |
| | AN960-10L | WASHER - PLAIN ---------- | 1 | |
| | AN380-2-2 | PIN - COTTER ---------- | 1 | |
| - 37 | AN155-16S | BARREL---------- | 1 | |
| | | ---*--- | | |
| - 38 | 1200182-1 | CABLE & CHAIN ASSY ---------- | 1 | |
| | | ATTACHING PARTS | | |
| - 39 | MS20392-2-9 | PIN ---------- | 1 | |
| - 40 | 1200182-9 | BUSHING ---------- | 1 | |
| - 41 | AN960-10L | WASHER - PLAIN ---------- | 1 | |
| - 42 | AN380-2-2 | PIN - COTTER ---------- | 1 | |
| | | ---*--- | | |

CONTINUED ON NEXT PAGE

| FIGURE AND INDEX NO. | PART NUMBER | DESCRIPTION<br>1 2 3 4 5 6 7 | UNITS PER ASSY | USABLE ON CODE |
|---|---|---|---|---|
| 2-3A- 43 | 1200167-1 | RIB ASSY | 1 | |
| - 44 | S1050-1-3.90 | GROMMET BULK ITEM - 3.90 INCHES REQD | A/R | |
| - 45 | 1200169-1 | DOUBLER | 1 | |
| | | ATTACHING PARTS | | |
| - 46 | AN525-10R9 | SCREW | 2 | |
| | | ---*--- | | |
| - 47 | 1200168-1 | COVER | 1 | |
| | | ATTACHING PARTS | | |
| - 48 | AN525-832R7 | SCREW | 14 | |
| - 49 | NAS697A08 | NUTPLATE | 6 | |
| - 50 | NAS696A08 | NUTPLATE | 12 | |
| | | ---*--- | | |
| - 51 | S1232-10 | CIRCUIT BREAKER THRU 1963 ONLY | 1 | |
| | S1360-10 | CIRCUIT BREAKER 1964 & ON | 1 | |
| | | CESSNA NAV-O-MATIC 300 AUTOPILOT INSTALLATION<br>THE NAV-O-MATIC 300 INSTALLATION IS THE SAME AS<br>THE 200 AUTOPILOT EXCEPT AS NOTED BELOW.<br>ITEM 52 REPLACES ITEM 1. | | |
| - 52 | 28870-1214 | CONTROLLER AMPLIFIER | 1 | |
| | | THE FOLLOWING ITEMS ARE REQUIRED IN ADDITION<br>TO THOSE LISTED FOR THE NAV-O-MATIC 200 | | |
| - 53 | 28900 | OMNI COUPLER ASSEMBLY | 1 | |
| | | ATTACHING PARTS | | |
| - 54 | AN515-6R8 | SCREW THREE REQD THRU 1964 ONLY | 4 | |
| - 55 | AN960-6 | WASHER-----THREE REQD THRU 1964 ONLY | 4 | |
| - 56 | MS20365-632C | NUT THREE REQD THRU 1964 ONLY | 4 | |
| | | ---*--- | | |
| - 57 | 30370-0100 | DIRECTIONAL GYRO | 1 | |
| | | ATTACHING PARTS | | |
| - 58 | AN515-6R10 | SCREW | 3 | |
| | | ---*--- | | |
| - 59 | S1495-6 | HOSE BULK ITEM | A/R | |
| - 60 | MS20822-6D | ELBOW TWO REQD ON EARLY AIRCRAFT | 1 | |
| - 61 | S1497-6 | FITTING | 2 | |
| - 62 | SS-51045-K2215 | PLUG BUTTON | 1 | |
| | A5299-12 | LIGHT ASSY GMC ALTERNATE PART IS 5602-R-12 | 1 | |
| | | GLAR - BAN LOCATED JUST TO THE RIGHT OF THE<br>CONTROLLER AMPLIFIER NOT SHOWN - USED ON SOME EARLY<br>1965 MODELS ONLY | | |
| | | ATTACHING PARTS | | |
| | AN960-10L | WASHER | 1 | |
| | NAS43DD4-32 | SPACER | 1 | |
| | | ---*--- | | |
| - 63 | S392-3 | SWITCH-----USED ONLY WHEN DUAL OMNIS ARE INSTALLED | 1 | |

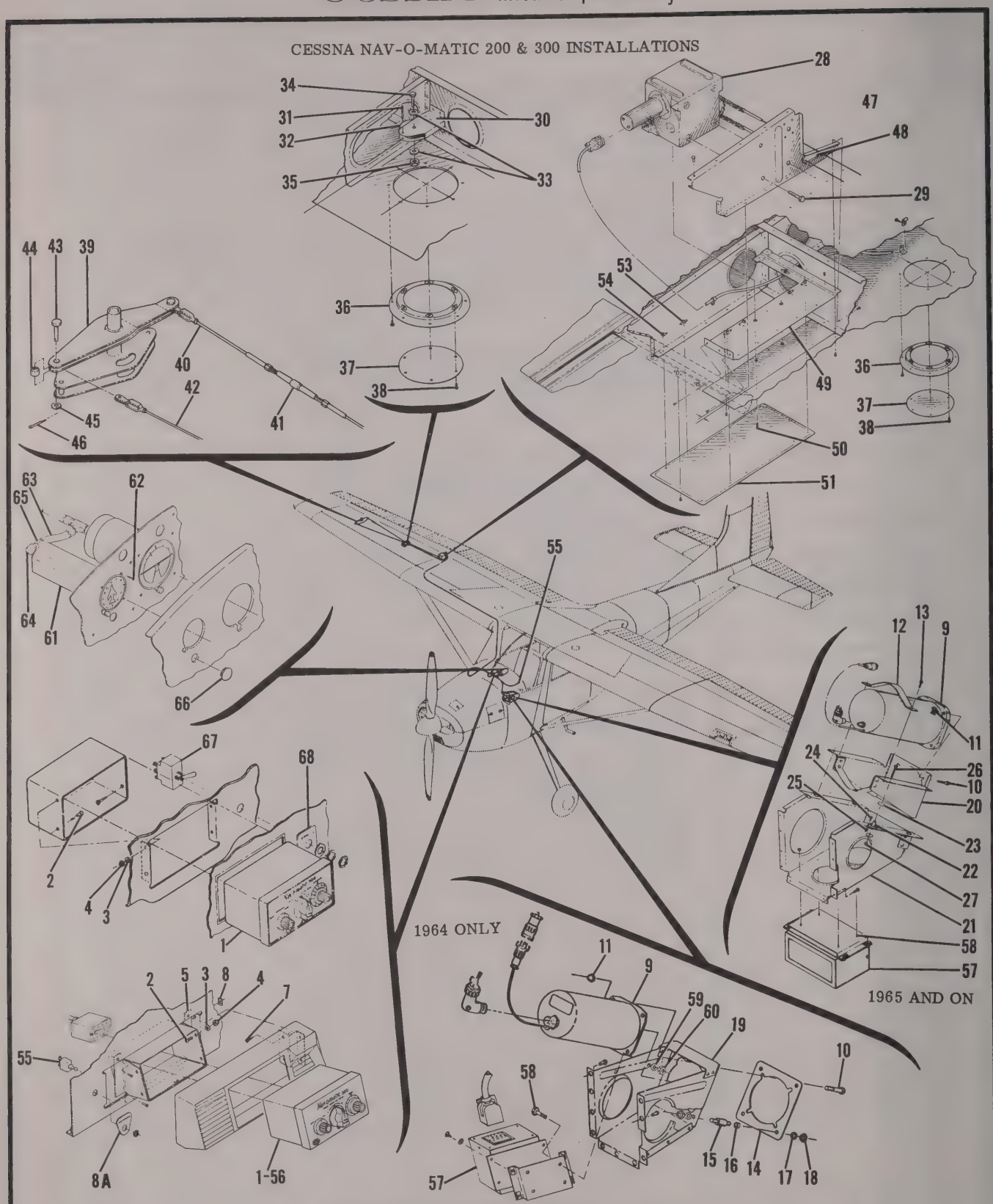


## 180 SERIAL 18051184 & ON
## 185 SERIAL 185-0513 & ON

Figure 2-3B. Cessna Nav-O-Matic 200 & 300 Installations

| FIGURE AND INDEX NO. | PART NUMBER | DESCRIPTION<br>1 2 3 4 5 6 7 | UNITS PER ASSY | USABLE ON CODE |
|---|---|---|---|---|
| 2-3B- | | CESSNA NAV-O-MATIC 200 INSTALLATION 180 & 185 ONLY ---- | N/P | |
| - 1 | 30340-1114 | CONTROLLER AMPLIFIER ---------- | 1 | |
| | | ATTACHING PARTS | | |
| - 2 | AN507-632R6 | SCREW ---------- | 4 | |
| - 3 | AN960-6 | WASHER---------- | 4 | |
| - 4 | NAS679A06 | NUT ---------- | 4 | |
| | | ---*--- | | |
| - 5 | 0770062-1 | BRACKET THRU 1964 ONLY---------- | 1 | |
| - 6 | 0770061-1 | COVER ASSY THRU 1964 ONLY ---------- | 1 | |
| | | ATTACHING PARTS | | |
| - 7 | S1021Z6-6 | SCREW ---------- | 2 | |
| - 8 | NAS446-2-3 | NUT ---------- | 2 | |
| - 8A | 0513153-10 | PLACARD ---------- | 1 | |
| | | ---*--- | | |
| - 9 | 50320 | RATE GYRO ---------- | 1 | |
| | | ATTACHING PARTS | | |
| - 10 | AN515-8R12 | SCREW ---------- | 4 | |
| - 11 | MS20364-832C | NUT ---------- | 4 | |
| - 12 | 0770710-5 | RETAINER STRAP USED ONLY WHEN ITEM 21 IS INSTALLED ---- | 1 | |
| - 13 | AN515-8R6 | SCREW ---------- | 2 | |
| | | ---*--- | | |
| - 14 | 1200181-4 | PLATE - MOUNTING-----USED ONLY WHEN ITEM 19 IS INSTALLED | 1 | |
| | | THRU 1964 MODELS ONLY | | |
| | | ATTACHING PARTS | | |
| - 15 | 0411059-1 | MOUNT - RUBBER ---------- | 4 | |
| - 16 | S355-2 | SPACER---------- | 8 | |
| - 17 | AN936A8B | LOCK WASHER---------- | 8 | |
| - 18 | AN340B8 | NUT ---------- | 8 | |
| | | ---*--- | | |
| - 19 | 1200181-1 | BRACKET THRU 1964 ONLY---- WHEN EXHAUSTED USE --------- | 1 | |
| | | ITEMS 20 & 21 | | |
| - 20 | 0770710-2 | SUPPORT ASSY 1965 & ON---- REPLACES ITEM 19 FOR SPARES | 1 | |
| | | WHEN SUPPLY IS EXHAUSTED | | |
| - 21 | 0770710-6 | MOUNTING BRACKET-----1965 & ON-----REPLACES ITEM 19 FOR---- | 1 | |
| | | SPARES WHEN SUPPLY IS EXHAUSTED | | |
| - 22 | S1575-1 | MULTI - PLANE MOUNT 1965 & ON GOOD FOR ALL SPARES | 4 | |
| | | WHEN ITEMS 20 & 21 ARE INSTALLED | | |
| | | ATTACHING PARTS | | |
| - 23 | S1450-2A14-032 | SNUB - WASHER ---------- | 8 | |
| - 24 | AN515-6R6 | SCREW ---------- | 8 | |
| - 25 | MS20365-632C | NUT ---------- | 8 | |
| - 26 | AN515-8R20 | SCREW ---------- | 4 | |
| - 27 | MS20364-832C | NUT ---------- | 4 | |
| | | ---*--- | | |
| - 28 | 26360-0000 | ACTUATOR ASSEMBLY ---------- | 1 | |
| | | ATTACHING PARTS | | |
| - 29 | AN3-4A | BOLT ---------- | 4 | |
| | | ---*--- | | |
| - 30 | 1200183-1 | BRACKET ---------- | 1 | |
| - 31 | MS24665-134 | COTTER PIN ---------- | 1 | |
| - 32 | S378-3L | PULLEY---------- | 1 | |
| | | ATTACHING PARTS | | |
| - 33 | AN960-416L | WASHER - PLAIN ---------- | 2 | |
| - 34 | AN4-10A | BOLT ---------- | 1 | |
| - 35 | MS20365-428C | NUT ---------- | 1 | |
| | | ---*--- | | |
| - 36 | S226-5F | DOUBLER ---------- | 2 | |
| - 37 | S225-4F | COVER ---------- | 2 | |
| | | ATTACHING PARTS | | |
| - 38 | S1022Z8-8 | SCREW ---------- | 12 | |
| | | ---*--- | | |
| - 39 | 1200180-1 | BELLCRANK ASSY ---------- | 1 | |
| - 40 | 1200182-2 | CABLE ASSY ---------- | 1 | |
| | | ATTACHING PARTS | | |
| | MS20392-2-9 | PIN ---------- | 1 | |
| | 1200182-9 | BUSHING ---------- | 1 | |
| | AN960-10L | WASHER - PLAIN ---------- | 1 | |
| | AN380-2-2 | PIN - COTTER ---------- | 1 | |
| - 41 | AN155-16S | BARREL---------- | 1 | |
| | | ---*--- | | |

CONTINUED ON NEXT PAGE

| FIGURE AND INDEX NO. | PART NUMBER | DESCRIPTION<br>1 2 3 4 5 6 7 | UNITS PER ASSY | USABLE ON CODE |
|---|---|---|---|---|
| 2-38- 42 | 1200182-1 | CABLE & CHAIN ASSY | 1 | |
| | | ATTACHING PARTS | | |
| - 43 | MS20392-2-9 | PIN | 1 | |
| - 44 | 1200182-9 | BUSHING | 1 | |
| - 45 | AN960-10L | WASHER - PLAIN | 1 | |
| - 46 | AN380-2-2 | PIN - COTTER | 1 | |
| | | ---*--- | | |
| - 47 | 1200167-1 | RIB ASSY | 1 | |
| - 48 | S1050-1-3.90 | GROMMET BULK ITEM - 3.90 INCHES REQD | A/R | |
| - 49 | 1200169-1 | DOUBLER | 1 | |
| | | ATTACHING PARTS | | |
| - 50 | AN525-10R9 | SCREW | 2 | |
| | | ---*--- | | |
| - 51 | 1200168-1 | COVER | 1 | |
| | | ATTACHING PARTS | | |
| - 52 | AN525-832R7 | SCREW | 14 | |
| - 53 | NAS697A08 | NUTPLATE | 6 | |
| - 54 | NAS696A08 | NUTPLATE | 12 | |
| | | ---*--- | | |
| - 55 | S1232-10 | CIRCUIT BREAKER THRU 1963 ONLY | 1 | |
| | S1360-10 | CIRCUIT BREAKER 1964 & ON | 1 | |
| | | CESSNA NAV-O-MATIC 300 AUTOPILOT INSTALLATION<br>THE NAV-O-MATIC 300 INSTALLATION IS THE SAME AS<br>THE 200 AUTOPILOT EXCEPT AS NOTED BELOW.<br>ITEM 56 REPLACES ITEM 1. | | |
| - 56 | 28870-1214 | CONTROLLER AMPLIFIER | 1 | |
| | | THE FOLLOWING ITEMS ARE REQUIRED IN ADDITION<br>TO THOSE LISTED FOR THE NAV-O-MATIC 200 | | |
| - 57 | 28900 | OMNI COUPLER ASSY | 1 | |
| | | ATTACHING PARTS | | |
| - 58 | AN515-6R8 | SCREW THREE REQD THRU 1964 ONLY | 4 | |
| - 59 | AN960-6 | WASHER-----THREE REQD THRU 1964 ONLY | 4 | |
| - 60 | MS20365-632C | NUT THREE REQD THRU 1964 ONLY | 4 | |
| | | ---*--- | | |
| - 61 | 30370-0100 | DIRECTIONAL GYRO | 1 | |
| | | ATTACHING PARTS | | |
| - 62 | AN515-6R10 | SCREW | 3 | |
| | | ---*--- | | |
| - 63 | S1495-6 | HOSE BULK ITEM | A/R | |
| - 64 | MS20822-6D | ELBOW TWO REQD ON EARLY AIRCRAFT | 1 | |
| - 65 | S1497-6 | FITTING | 2 | |
| - 66 | SS-51045-K2215 | PLUG BUTTON | 1 | |
| | A5299-12 | LIGHT ASSY GMC ALTERNATE PART IS 5602-R-12 | 1 | |
| | | GLAR - BAN LOCATED JUST TO THE RIGHT OF THE<br>CONTROLLER AMPLIFIER NOT SHOWN - USED ON SOME EARLY<br>1965 MODELS ONLY | | |
| | | ATTACHING PARTS | | |
| | AN960-10L | WASHER | 1 | |
| | NAS43DD4-32 | SPACER | 1 | |
| | | ---*--- | | |
| - 67 | S392-3 | SWITCH-----USED ONLY WHEN DUAL OMNIS ARE INSTALLED | 1 | |
| - 68 | 0700145-1 | PLACARD | 1 | |

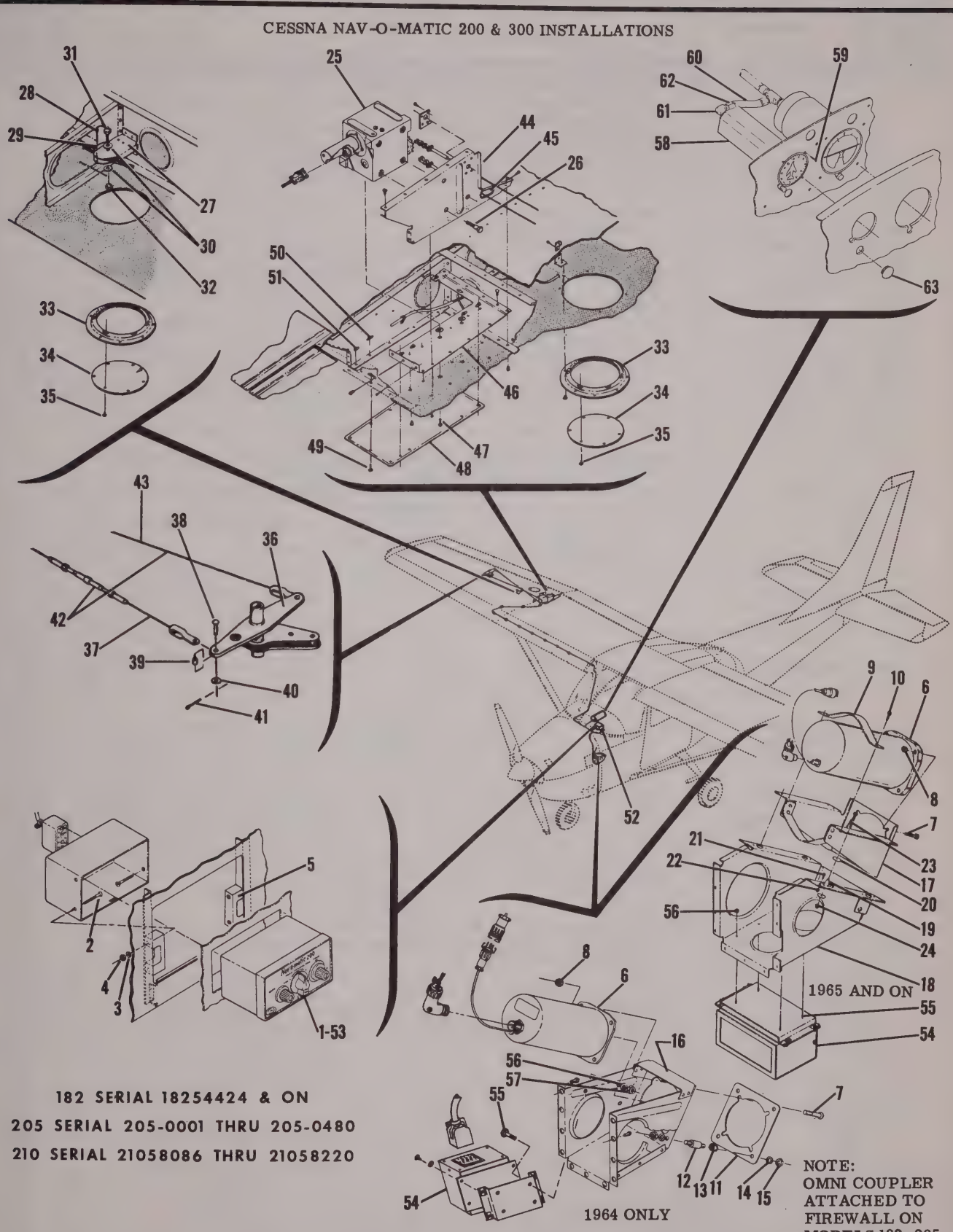


Figure 2-3C. Cessna Nav-O-Matic 200 & 300 Installations

| FIGURE AND INDEX NO. | PART NUMBER | DESCRIPTION<br>1 2 3 4 5 6 7 | UNITS PER ASSY | USABLE ON CODE |
|---|---|---|---|---|
| 2-3C- | | CESSNA NAV-O-MATIC 200 INSTALLATION ALL 182 & 205 MODELS & 210 MODELS THRU SERIAL 21058220 | N/P | |
| - 1 | 30340-1114 | CONTROLLER AMPLIFIER | 1 | |
| | | ATTACHING PARTS | | |
| - 2 | AN507-632R20 | SCREW | 4 | |
| - 3 | AN960-6 | WASHER | 4 | |
| - 4 | MS20365-632C | NUT | 4 | |
| - 5 | 0713739-1 | SPACER | 2 | |
| | | ---*--- | | |
| - 6 | 50320 | RATE GYRO | 1 | |
| | | ATTACHING PARTS | | |
| - 7 | AN515-8R12 | SCREW | 4 | |
| - 8 | MS20364-832C | NUT | 4 | |
| - 9 | 0770710-5 | RETAINER STRAP USED ONLY WHEN ITEM 18 IS INSTALLED | 1 | |
| - 10 | AN515-8R6 | SCREW USED ONLY WHEN ITEM 18 IS INSTALLED | 2 | |
| | | ---*--- | | |
| - 11 | 1200181-4 | PLATE - MOUNTING-----USED ONLY WHEN ITEM 16 IS INSTALLED | 1 | |
| | | ATTACHING PARTS | | |
| - 12 | 0411059-1 | MOUNT - RUBBER | 4 | |
| - 13 | S355-2 | SPACER | 8 | |
| - 14 | AN936A8B | LOCK WASHER | 8 | |
| - 15 | AN340B8 | NUT | 8 | |
| | | ---*--- | | |
| - 16 | 1200181-5 | BRACKET THRU 1964 ONLY---- WHEN EXHAUSTED USE ITEMS 17 & 18 | 1 | |
| - 17 | 0770710-2 | SUPPORT ASSY 1965 & ON---- REPLACES ITEM 16 FOR SPARES WHEN SUPPLY IS EXHAUSTED | 1 | |
| - 18 | 0770710-6 | MOUNTING BRACKET-----1965 & ON-----REPLACES ITEM 16 FOR---- SPARES WHEN SUPPLY IS EXHAUSTED | 1 | |
| - 19 | S1575-1 | MULTI - PLANE MOUNT 1965 & ON GOOD FOR ALL SPARES WHEN ITEMS 17 & 18 ARE INSTALLED. | 4 | |
| | | ATTACHING PARTS | | |
| - 20 | S1450-2A14-032 | SNUB - WASHER | 8 | |
| - 21 | AN515-6R6 | SCREW | 8 | |
| - 22 | MS20365-632C | NUT | 8 | |
| - 23 | AN515-8R20 | SCREW | 4 | |
| - 24 | MS20364-832C | NUT | 4 | |
| | | ---*--- | | |
| - 25 | 26360-0000 | ACTUATOR ASSEMBLY - 14 VOLT | 1 | |
| | | ATTACHING PARTS | | |
| - 26 | AN3-4A | BOLT | 4 | |
| | | ---*--- | | |
| - 27 | 1200183-1 | BRACKET | 1 | |
| - 28 | MS24665-134 | PIN - COTTER | 1 | |
| - 29 | S378-3L | PULLEY | 1 | |
| | | ATTACHING PARTS | | |
| - 30 | AN960-416L | WASHER - PLAIN | 2 | |
| - 31 | AN4-10A | BOLT | 1 | |
| - 32 | MS20365-428C | NUT | 1 | |
| | | ---*--- | | |
| - 33 | S226-5F | DOUBLER | 2 | |
| - 34 | S225-4F | COVER | 2 | |
| | | ATTACHING PARTS | | |
| - 35 | S1022Z8-8 | SCREW | 12 | |
| | | ---*--- | | |
| - 36 | 1270174-1 | BELLCRANK ASSY | 1 | |
| - 37 | 1200182-2 | CABLE ASSY | 1 | |
| | | ATTACHING PARTS | | |
| - 38 | MS20392-2-9 | PIN | 1 | |
| - 39 | 1200182-9 | BUSHING | 1 | |
| - 40 | AN960-10L | WASHER - PLAIN | 1 | |
| - 41 | AN380-2-2 | PIN - COTTER | 1 | |
| - 42 | AN155-16S | BARREL | 1 | |
| | | ---*--- | | |

CONTINUED ON NEXT PAGE

| FIGURE AND INDEX NO. | PART NUMBER | DESCRIPTION<br>1 2 3 4 5 6 7 | UNITS PER ASSY | USABLE ON CODE |
|---|---|---|---|---|
| 2-3C- 43 | 1200182-1 | CABLE & CHAIN ASSY | 1 | |
| | | ATTACHING PARTS | | |
| | MS20392-2-9 | PIN | 1 | |
| | 1200182-9 | BUSHING | 1 | |
| | AN960-10L | WASHER - PLAIN | 1 | |
| | AN380-2-2 | PIN - COTTER | 1 | |
| | AN155-16S | BARREL | 1 | |
| | | ---*--- | | |
| - 44 | 1200167-1 | RIB ASSY | 1 | |
| - 45 | S1050-1-3.90 | GROMMET BULK ITEM - 3.90 INCHES REQD | A/R | |
| - 46 | 1200169-1 | DOUBLER | 1 | |
| | | ATTACHING PARTS | | |
| - 47 | AN525-10R9 | SCREW | 2 | |
| | | ---*--- | | |
| - 48 | 1200168-1 | COVER | 1 | |
| | | ATTACHING PARTS | | |
| - 49 | AN525-832R7 | SCREW | 14 | |
| - 50 | NAS697A08 | NUTPLATE | 6 | |
| - 51 | NAS696A08 | NUTPLATE | 12 | |
| | | ---*--- | | |
| - 52 | S1232-10 | CIRCUIT BREAKER | 1 | |
| | S1360-10 | CIRCUIT BREAKER | 1 | |
| | | CESSNA NAV-O-MATIC 300 AUTOPILOT INSTALLATION<br>THE NAV-O-MATIC 300 INSTALLATION IS THE SAME AS<br>THE 200 AUTOPILOT EXCEPT AS NOTED BELOW.<br>ITEM 53 REPLACES ITEM 1. | | |
| - 53 | 2887-1214 | CONTROLLER AMPLIFIER | 1 | |
| | | THE FOLLOWING ITEMS ARE REQUIRED IN ADDITION<br>TO THOSE LISTED FOR THE NAV-O-MATIC 200 | | |
| - 54 | 28900 | OMNI COUPLER ASSEMBLY | 1 | |
| | | ATTACHING PARTS | | |
| - 55 | AN515-6R8 | SCREW | 4 | |
| - 56 | AN960-6 | WASHER | 4 | |
| - 57 | MS20365-632C | NUT | 4 | |
| | | ---*--- | | |
| - 58 | 30370-0100 | DIRECTIONAL GYRO | 1 | |
| | | ATTACHING PARTS | | |
| - 59 | AN515-6R10 | SCREW | 3 | |
| | | ---*--- | | |
| - 60 | S1495-6 | HOSE BULK ITEM | A/R | |
| - 61 | MS20822-6D | ELBOW | 1 | |
| - 62 | S1497-6 | FITTING | 1 | |
| - 63 | SS-51045-K2215 | PLUG BUTTON | 1 | |
| | A5299-12 | LIGHT ASSY GMC ALTERNATE PART IS 5602-R-12<br>GLAR - BAN LOCATED JUST TO THE RIGHT OF THE<br>CONTROLLER AMPLIFIER NOT SHOWN - USED ON SOME EARLY<br>1965 MODELS ONLY | 1 | |
| | | ATTACHING PARTS | | |
| | AN960-10L | WASHER | 1 | |
| | NAS43DD4-32 | SPACER | 1 | |
| | | ---*--- | | |

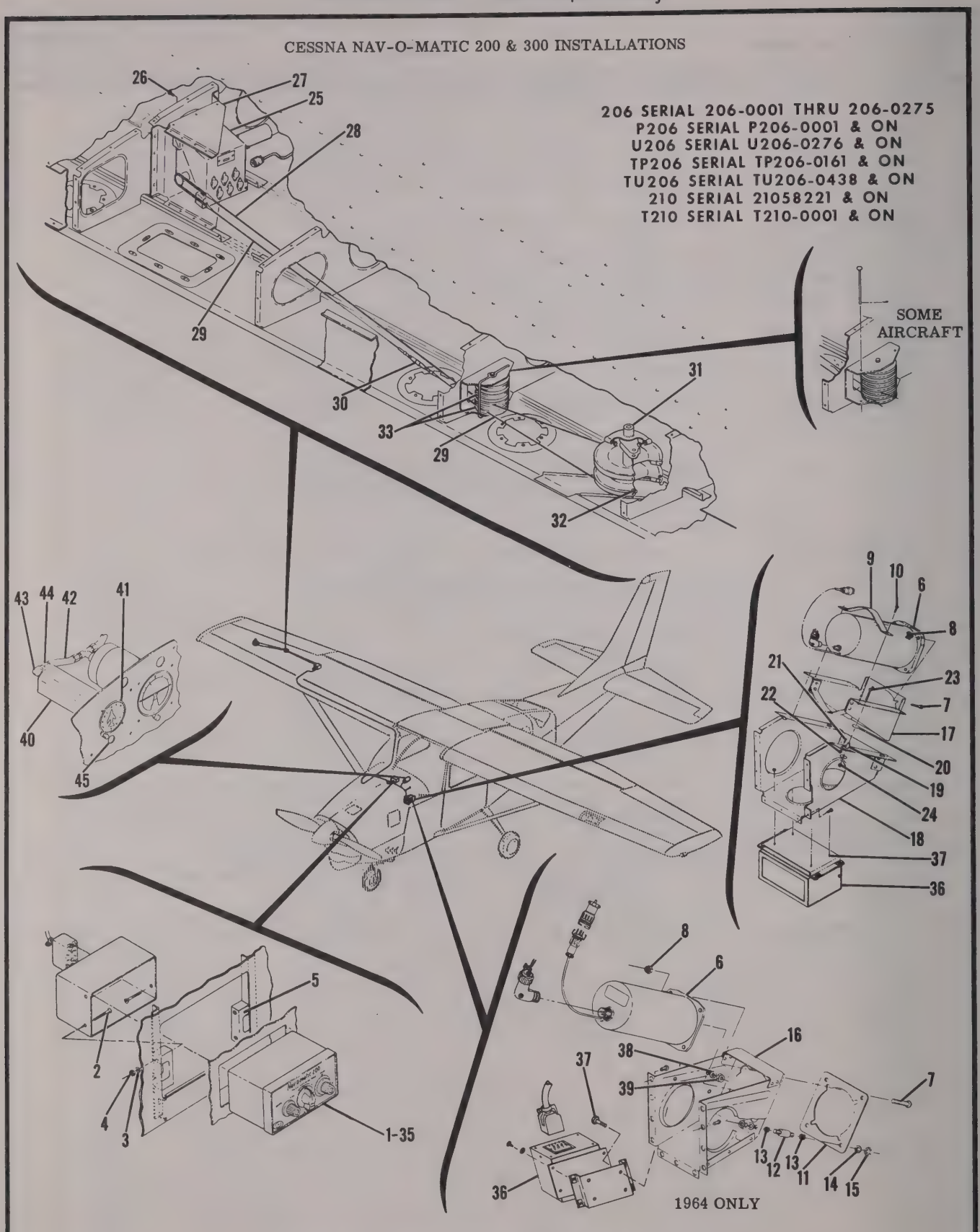


Figure 2-3D. Cessna Nav-O-Matic 200 & 300 Installations

| FIGURE AND INDEX NO. | PART NUMBER | DESCRIPTION<br>1 2 3 4 5 6 7 | UNITS PER ASSY | USABLE ON CODE |
|---|---|---|---|---|
| 2-3D- | | CESSNA NAV-O-MATIC 200 INSTALLATION MODEL 210 SERIAL ---- 21058221 & ON AND ALL 206, P206, U206, TP206, TU206 & T210 MODELS | N/P | |
| - 1 | 30340-1114 | CONTROLLER AMPLIFIER | 1 | |
| | | ATTACHING PARTS | | |
| - 2 | AN507-632R20 | SCREW | 4 | |
| - 3 | AN960-6 | WASHER | 4 | |
| - 4 | MS20365-632C | NUT | 4 | |
| - 5 | 0713739-1 | SPACER | 2 | |
| | | ---*--- | | |
| - 6 | 50320 | RATE GYRO | 1 | |
| | | ATTACHING PARTS | | |
| - 7 | AN515-8R12 | SCREW | 4 | |
| - 8 | MS20364-832C | NUT | 4 | |
| - 9 | 0770710-5 | RETAINER STRAP USED ONLY WHEN ITEM 18 IS INSTALLED ---- | 1 | |
| - 10 | AN515-8R6 | SCREW USED ONLY WHEN ITEM 18 IS INSTALLED | 2 | |
| | | ---*--- | | |
| - 11 | 1200181-4 | PLATE - MOUNTING-----USED ONLY WHEN ITEM 16 IS INSTALLED | 1 | |
| | | ATTACHING PARTS | | |
| - 12 | 0411059-1 | MOUNT RUBBER | 4 | |
| - 13 | S355-2 | SPACER | 8 | |
| - 14 | AN936A8B | LOCKWASHER | 8 | |
| - 15 | AN340B8 | NUT | 8 | |
| | | ---*--- | | |
| - 16 | 1200181-5 | BRACKET THRU 1964 ONLY---- WHEN EXHAUSTED USE | 1 | |
| | | ITEMS 17 & 18 | | |
| - 17 | 0770710-2 | SUPPORT ASSY 1965 & ON---- REPLACES ITEM 16 FOR SPARES | 1 | |
| | | WHEN SUPPLY IS EXHAUSTED | | |
| - 18 | 0770710-6 | MOUNTING BRACKET-----1965 & ON-----REPLACES ITEM 16 FOR---- | 1 | |
| | | SPARES WHEN SUPPLY IS EXHAUSTED | | |
| - 19 | S1575-1 | MULTI - PLANE MOUNT 1965 & ON GOOD FOR ALL SPARES | 4 | |
| | | WHEN ITEMS 17 & 18 ARE INSTALLED. | | |
| | | ATTACHING PARTS | | |
| - 20 | S1450-2A14-032 | SNUB - WASHER | 8 | |
| - 21 | AN515-6R6 | SCREW | 8 | |
| - 22 | MS20365-632C | NUT | 8 | |
| - 23 | AN515-8R20 | SCREW | 4 | |
| - 24 | MS20364-832C | NUT | 4 | |
| | | ---*--- | | |
| - 25 | 26360-0000 | ACTUATOR ASSY | 1 | |
| | | ATTACHING PARTS | | |
| - 26 | AN3-4A | BOLT | 4 | |
| | | ---*--- | | |
| - 27 | 1220091-1 | BRACKET | 1 | |
| - 28 | 1270049-1 | CABLE & CHAIN ASSY | 1 | |
| | | ATTACHING PARTS | | |
| | AN21-9 | BOLT | 1 | |
| | AN320-1 | NUT | 1 | |
| | MS24665-132 | PIN | 1 | |
| | | ---*--- | | |
| - 29 | 1270049-3 | CABLE ASSY | 1 | |
| | | ATTACHING PARTS | | |
| - 30 | AN155B16S | BARREL | 1 | |
| | AN21-9 | BOLT | 1 | |
| | AN320-1 | NUT | 1 | |
| | MS24665-132 | PIN | 1 | |
| | | ---*--- | | |
| - 31 | 1270051-1 | BELLCRANK | 1 | |
| | | ATTACHING PARTS | | |
| - 32 | AN21-9 | BOLT | 2 | |
| | AN320-1 | NUT | 2 | |
| | MS24665-132 | PIN - COTTER | 2 | |
| | | ---*--- | | |
| - 33 | MS20220-2 | PULLEY | 2 | |
| - 34 | S1232-10 | CIRCUIT BREAKER | 1 | |
| | S1360-10 | CIRCUIT BREAKER | 1 | |

CONTINUED ON NEXT PAGE

| FIGURE AND INDEX NO. | PART NUMBER | DESCRIPTION<br>1 2 3 4 5 6 7 | UNITS PER ASSY | USABLE ON CODE |
|---|---|---|---|---|
| | | CESSNA NAV-O-MATIC 300 AUTOPILOT INSTALLATION<br>THE NAV-O-MATIC 300 INSTALLATION IS THE SAME AS<br>THE 200 AUTOPILOT EXCEPT AS NOTED BELOW.<br>ITEM 35 REPLACES ITEM 1. | | |
| - 35 | 2887-1214 | CONTROLLER AMPLIFIER ---------- | 1 | |
| | | THE FOLLOWING ITEMS ARE REQUIRED IN ADDITION<br>TO THOSE LISTED FOR THE NAV-O-MATIC 200 | | |
| - 36 | 28900 | OMNI COUPLER ASSEMBLY---------- | 1 | |
| | | ATTACHING PARTS | | |
| - 37 | AN515-6R8 | SCREW ---------- | 4 | |
| - 38 | AN960-8 | WASHER---------- | 4 | |
| - 39 | MS20365-632C | NUT ---------- | 4 | |
| | | ---*--- | | |
| - 40 | 30370-0100 | DIRECTIONAL GYRO---------- | 1 | |
| | | ATTACHING PARTS | | |
| - 41 | AN515-6R10 | SCREW ---------- | 3 | |
| | | ---*--- | | |
| - 42 | AN1495-6 | HOSE BULK ITEM ---------- | A/R | |
| - 43 | MS20822-6D | ELBOW ---------- | 1 | |
| - 44 | S1497-6 | FITTING ---------- | 1 | |
| - 45 | SS-51045-K2215 | PLUG BUTTON---------- | 1 | |
| | A5299-12 | LIGHT ASSEMBLY GMC ALTERNATE PART IS 5602-R-12 ---- | 1 | |
| | | GLAR - BAN LOCATED JUST TO THE RIGHT OF THE<br>CONTROLLER AMPLIFIER NOT SHOWN - USED ON SOME EARLY<br>1965 MODELS ONLY | | |
| | | ATTACHING PARTS | | |
| | AN960-10L | WASHER---------- | 1 | |
| | NAS43DD4-32 | SPACER---------- | 1 | |
| | | ---*--- | | |

CESSNA NAV-O-MATIC 200 & 300 INSTALLATIONS

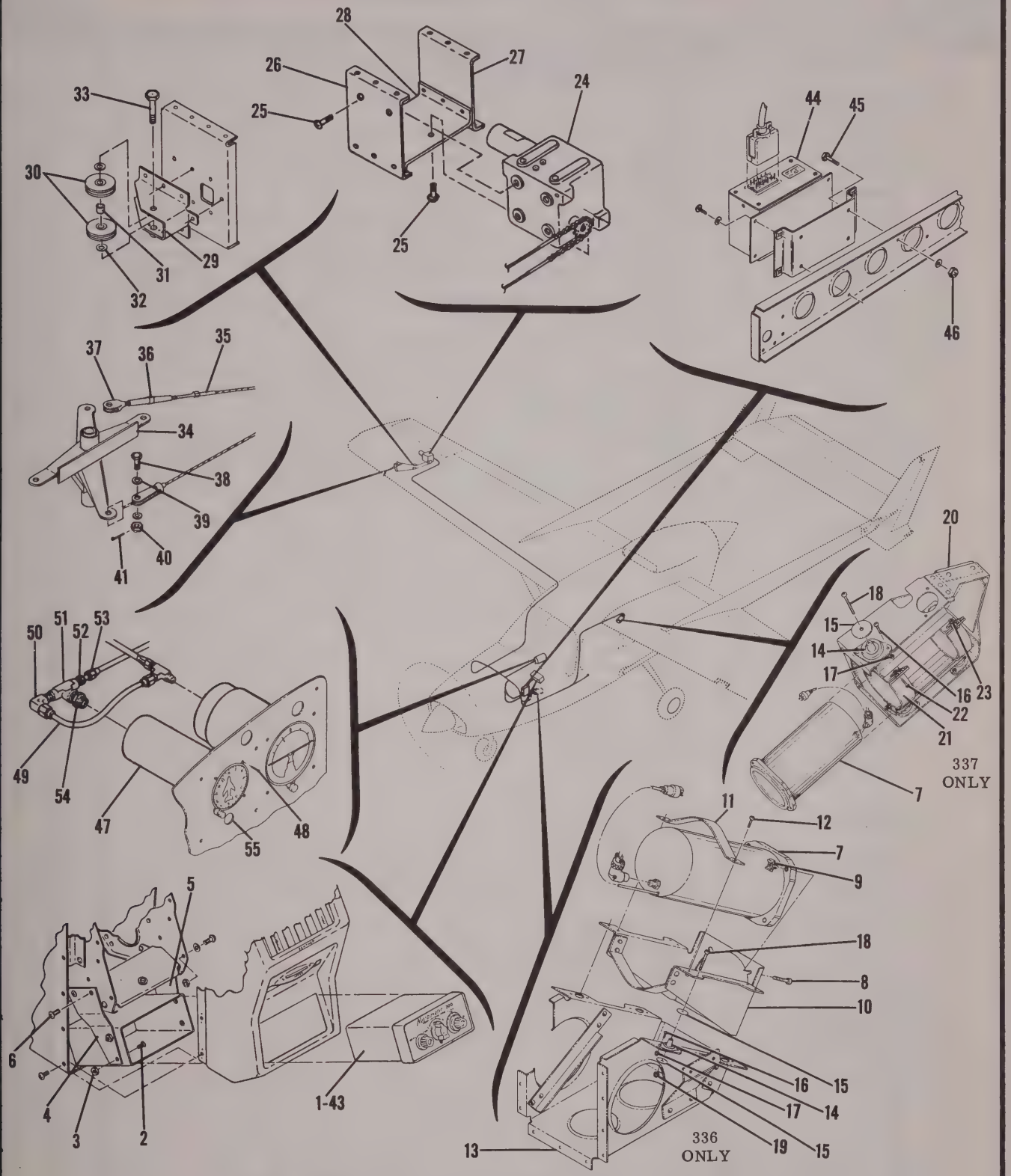


## 336 SERIAL 336-0001 THRU 336-0195
## 337 SERIAL 337-0001 & ON

Figure 2-3E. Cessna Nav-O-Matic 200 & 300 Installations

| FIGURE AND INDEX NO. | PART NUMBER | DESCRIPTION<br>1 2 3 4 5 6 7 | UNITS PER ASSY | USABLE ON CODE |
|---|---|---|---|---|
| 2-3E- | | CESSNA NAV-O-MATIC 200 INSTALLATION 336 & 337 ONLY ---- | N/P | |
| - 1 | 30340-1128 | CONTROLLER AMPLIFIER - 28 VOLT | 1 | |
| | | ATTACHING PARTS | | |
| - 2 | AN507-632R6 | SCREW | 4 | |
| - 3 | MS20365-632C | NUT | 4 | |
| | | ---*--- | | |
| - 4 | 1470066-23 | BRACKET - CONTROLLER - LH | 1 | |
| - 5 | 1470066-24 | BRACKET - CONTROLLER - RH | 1 | |
| | | ATTACHING PARTS | | |
| - 6 | AN515-8R8 | SCREW | 4 | |
| | | ---*--- | | |
| - 7 | 29520 | RATE GYRO - 28 VOLT | 1 | |
| | | ATTACHING PARTS | | |
| - 8 | AN515-6R12 | SCREW 336 ONLY | 4 | |
| - 9 | NAS487-21 | CLIP NUT 336 ONLY | 4 | |
| | | ---*--- | | |
| - 10 | 10336-004-6 | SUPPORT ASSY 336 ONLY | 1 | |
| - 11 | 0770710-5 | RETAINER STRAP 336 ONLY | 1 | |
| | | ATTACHING PARTS | | |
| - 12 | AN515-8R6 | SCREW 336 ONLY | 2 | |
| | | ---*--- | | |
| - 13 | 10336-004-5 | BRACKET ASSY GOOD FOR ALL 336 SPARES | 1 | |
| - 14 | S1575-1 | MULTI - PLANE MOUNT | 4 | |
| | | ATTACHING PARTS | | |
| - 15 | S1450-2A14-032 | SNUB - WASHER | 8 | |
| - 16 | AN515-6R6 | SCREW | 8 | |
| - 17 | MS20365-632C | NUT | 8 | |
| - 18 | AN515-8R20 | SCREW | 4 | |
| - 19 | MS20364-832C | NUT | 4 | |
| | | ---*--- | | |
| - 20 | 1512606-2 | BRACKET ASSY 337 ONLY | 1 | |
| - 21 | 1512606-5 | CLAMP ASSY 337 ONLY | 1 | |
| | | ATTACHING PARTS | | |
| - 22 | AN515-8R8 | SCREW 337 ONLY | 2 | |
| - 23 | S1477-08 | NUT 337 ONLY | 2 | |
| | | ---*--- | | |
| - 24 | 29510-0000 | ACTUATOR ASSY - 28 VOLT | 1 | |
| | | ATTACHING PARTS | | |
| | AN960-10 | WASHER | 4 | |
| - 25 | AN520-10R10 | SCREW | 4 | |
| | | ---*--- | | |
| - 26 | 1422023-1 | PLATE - CHORD TIE | 1 | |
| - 27 | 1422023-2 | PLATE - CHORD TIE | 1 | |
| - 28 | 1422023-3 | PLATE - ACTUATOR SUPPORT | 1 | |
| | 1470066-9 | DOOR - ACCESS NOT SHOWN | 1 | |
| | | ATTACHING PARTS | | |
| | AN507-1032R8 | SCREW | 16 | |
| | | ---*--- | | |
| - 29 | 1470067-4 | BRACKET ASSY - PULLEY | 1 | |
| - 30 | S378-1 | PULLEY | 2 | |
| | | ATTACHING PARTS | | |
| - 31 | NAS43-3-15 | SPACER | 1 | |
| - 32 | AN960-10L | WASHER - PLAIN | 2 | |
| - 33 | AN3-12A | BOLT | 1 | |
| | | ---*--- | | |
| - 34 | 1462000-2 | BELLCRANK ASSY | 1 | |
| - 35 | 1470067-6 | CHAIN & CABLE ASSY | 1 | |
| | | ATTACHING PARTS | | |
| - 36 | AN155-16S | BARREL - TURNBUCKEL | 1 | |
| - 37 | AN161-16LS | FORK | 1 | |
| - 38 | AN3-7 | BOLT | 2 | |
| - 39 | AN960-C10L | WASHER - PLAIN | 2 | |
| - 40 | AN310-C3 | NUT | 2 | |
| - 41 | MS24665-134 | PIN - COTTER | 2 | |
| | | ---*--- | | |
| - 42 | S1360-5 | CIRCUIT BREAKER | 1 | |

CONTINUED ON NEXT PAGE

| FIGURE AND INDEX NO. | PART NUMBER | DESCRIPTION<br>1 2 3 4 5 6 7 | UNITS PER ASSY | USABLE ON CODE |
|---|---|---|---|---|
| | | CESSNA NAV-O-MATIC 300 AUTOPILOT INSTALLATION<br>THE NAV-O-MATIC 300 INSTALLATION IS THE SAME AS<br>THE 200 EXCEPT AS NOTED BELOW.<br>ITEM 43 SAME AS ITEM 1. | | |
| - 43 | 28870-1228 | CONTROLLER AMPLIFIER - 28 VOLT---------- | 1 | |
| | | THE FOLLOWING ITEMS ARE REQUIRED IN ADDITION<br>TO THOSE LISTED FOR THE NAV-O-MATIC 200 | | |
| - 44 | 28900 | OMNI COUPLER ASSY ---------- | 1 | |
| | | ATTACHING PARTS | | |
| - 45 | AN515-8R10 | SCREW 336 ONLY ---------- | 2 | |
| - 46 | AN363-832 | NUT 336 ONLY---------- | 2 | |
| | AN515-8R18 | SCREW 337 ONLY - NOT SHOWN---------- | 2 | |
| | NAS43DD3-48 | SPACER-----337 ONLY - NOT SHOWN ---------- | 2 | |
| | MS20365-832C | NUT 337 ONLY - NOT SHOWN ---------- | 2 | |
| | | ---*--- | | |
| - 47 | 30370-0100 | DIRECTIONAL GYRO---------- | 1 | |
| | | ATTACHING PARTS | | |
| - 48 | AN507-632R10 | SCREW ---------- | 3 | |
| | | ---*--- | | |
| - 49 | 1400106-68 | TUBE ASSY ---------- | 1 | |
| - 50 | MS20822-6D | ELBOW ---------- | 1 | |
| - 51 | AN917-2D | TEE ---------- | 1 | |
| - 52 | AN912-1D | BUSHING ---------- | 1 | |
| - 53 | AN816-2D | NIPPLE---------- | 1 | |
| - 54 | AN911-2D | NIPPLE---------- | 1 | |
| - 55 | SS-51045-K2215 | PLUG BUTTON---------- | 1 | |

CESSNA TRANSCEIVER 500 INSTALLATION

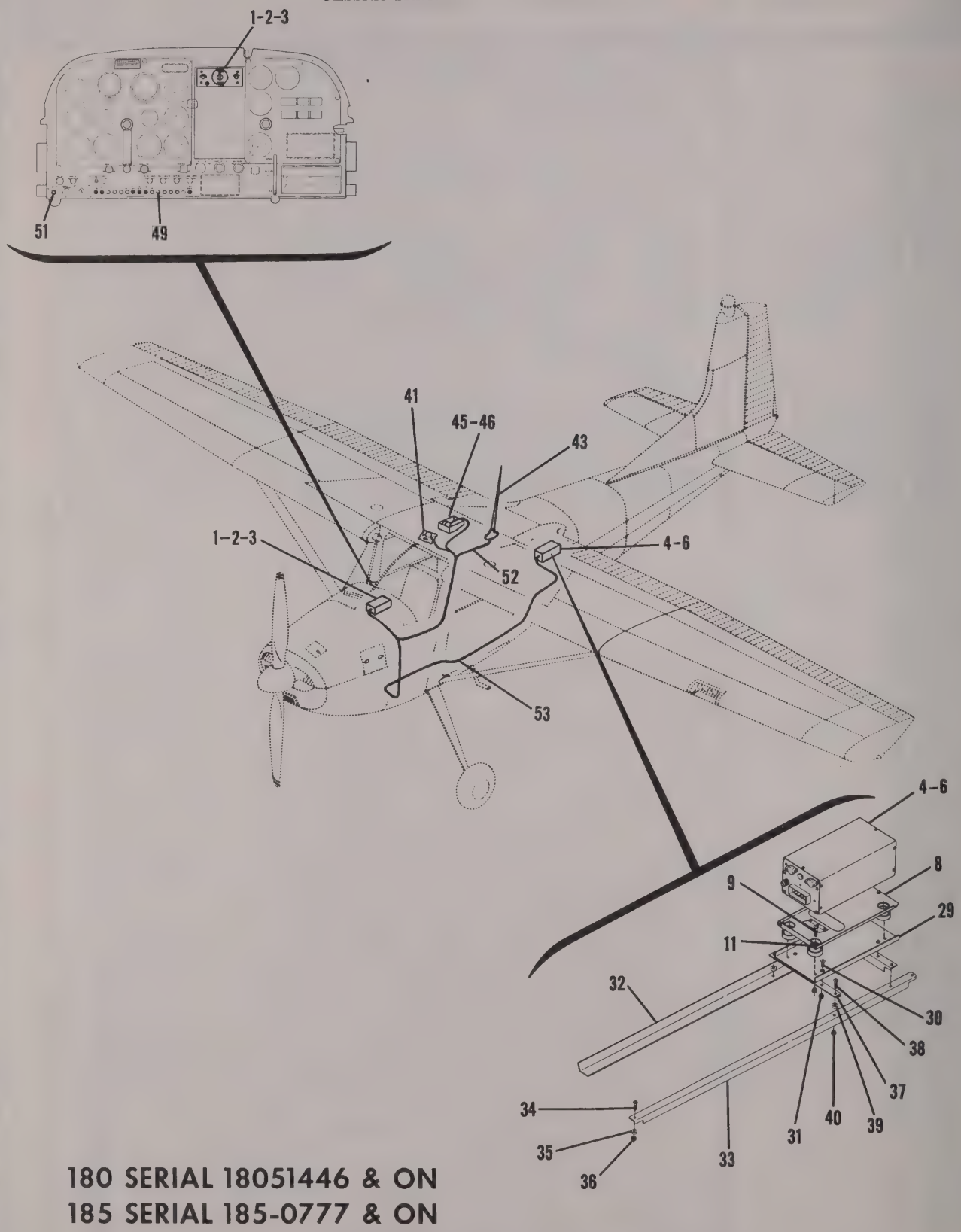


**180 SERIAL 18051446 & ON**
**185 SERIAL 185-0777 & ON**

Figure 2-4. Cessna Transceiver 500 Installation - Sheet 1

CESSNA TRANSCEIVER 500 INSTALLATION

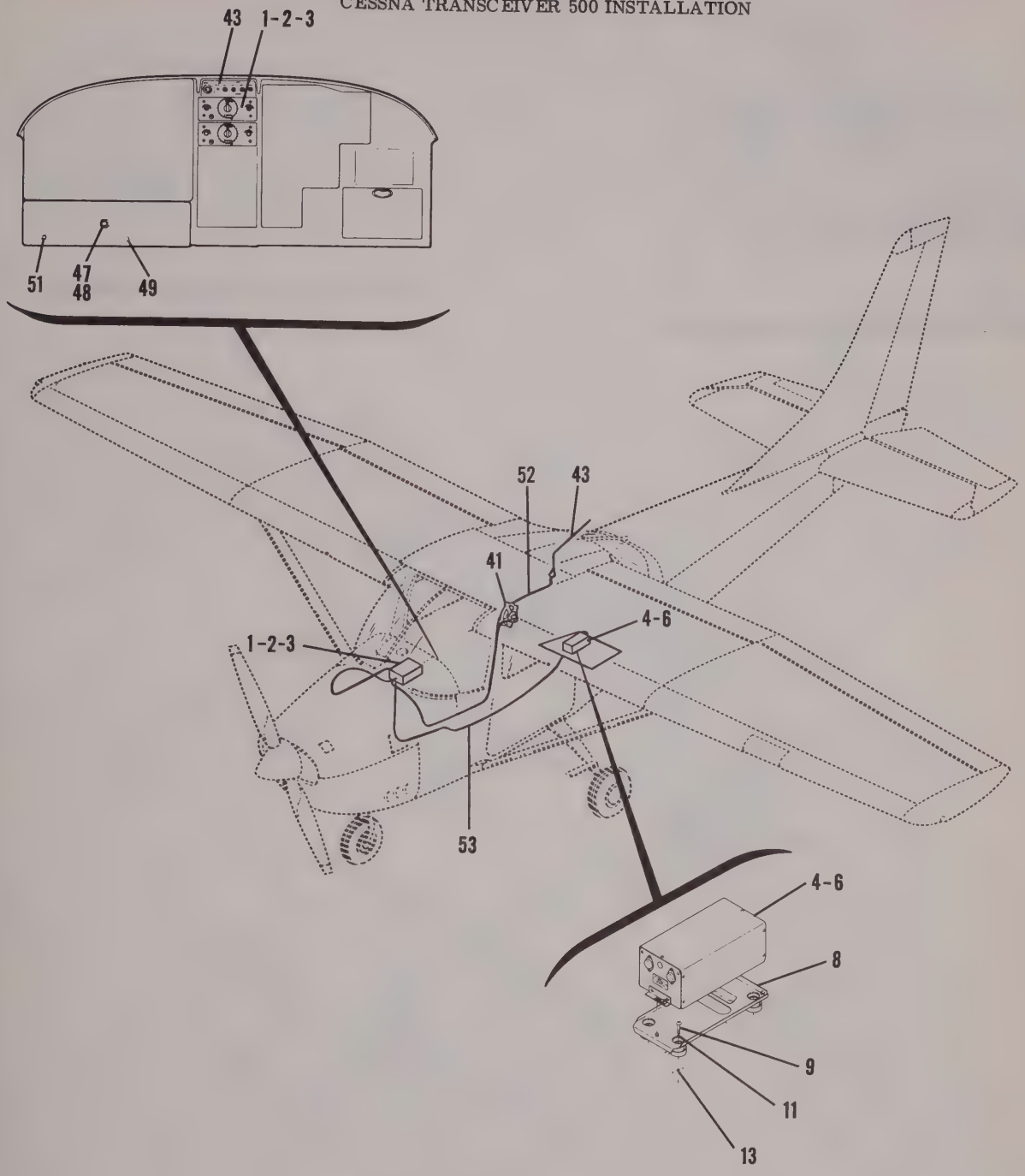


## 182 SERIAL 18254347 &ON

Figure 2-4. Cessna Transceiver 500 Installation - Sheet 2

CESSNA TRANSCEIVER 500 INSTALLATION

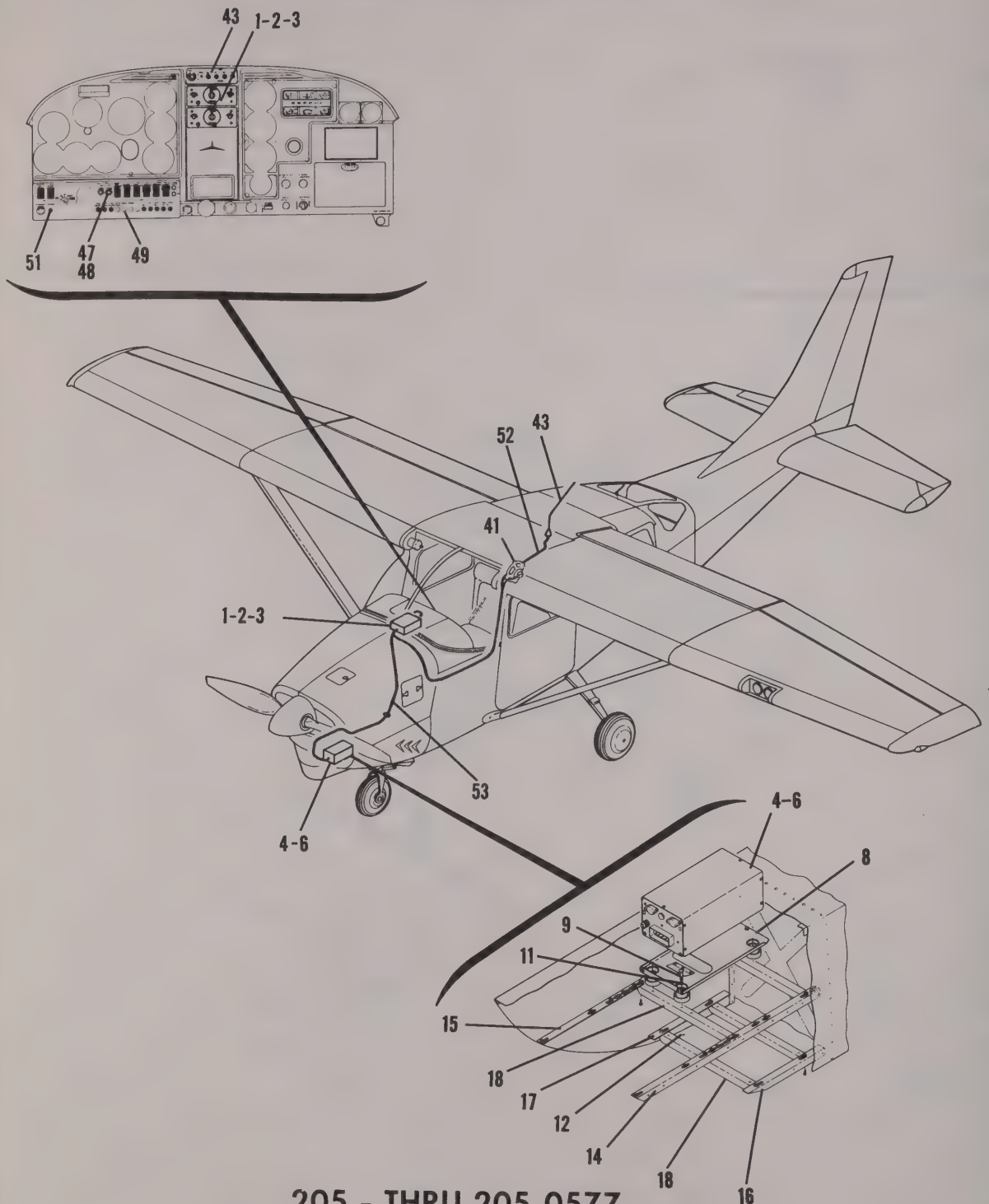


**205 - THRU 205-0577**
**206 - THRU 206-0275**
**P206 SERIAL P206-0001 & ON**
**U206 SERIAL U206-0276 & ON**

Figure 2-4. Cessna Transceiver 500 Installation - Sheet 3

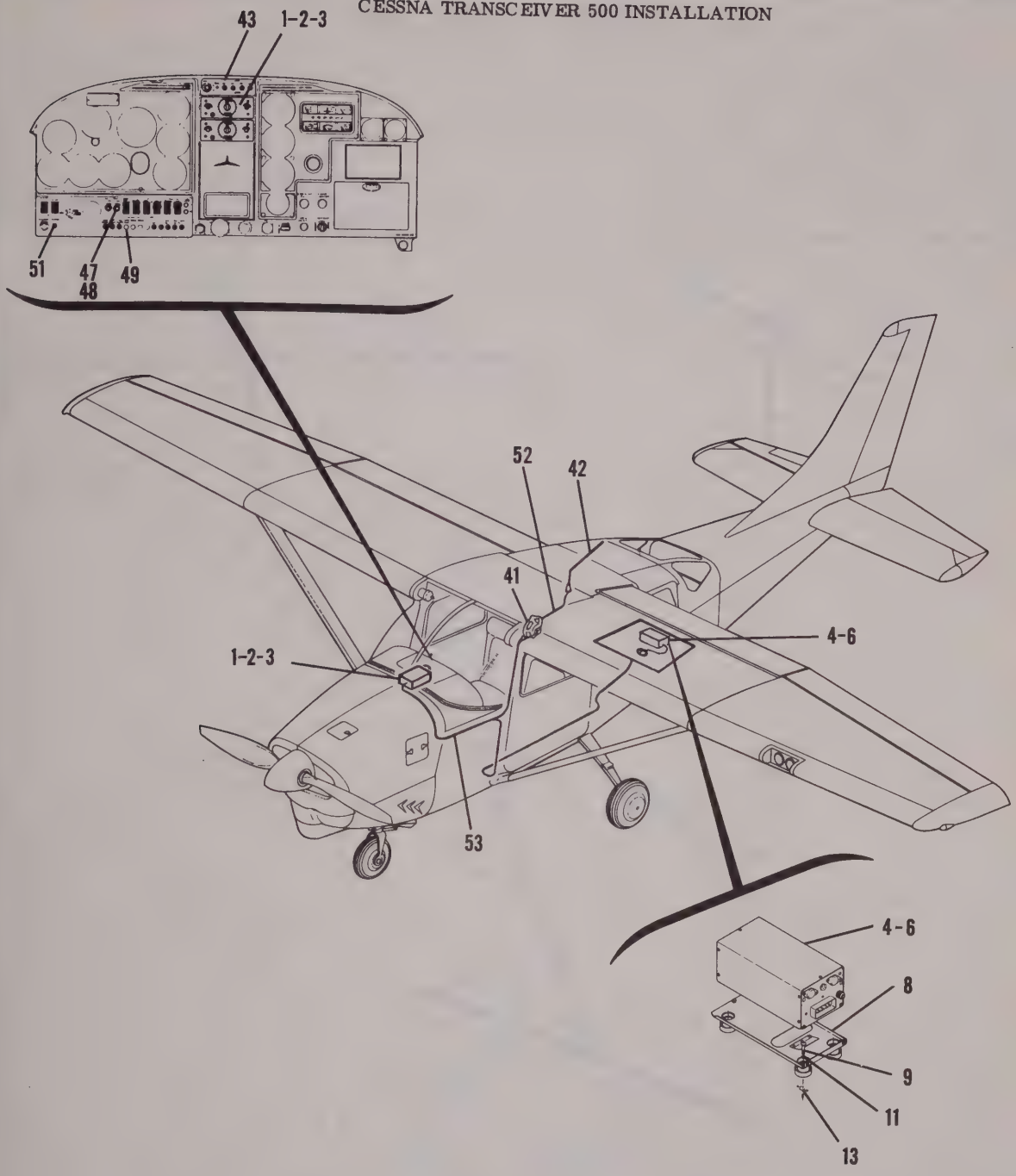


## 210 SERIAL 21058111 & ON

Figure 2-4. Cessna Transceiver 500 Installation - Sheet 4

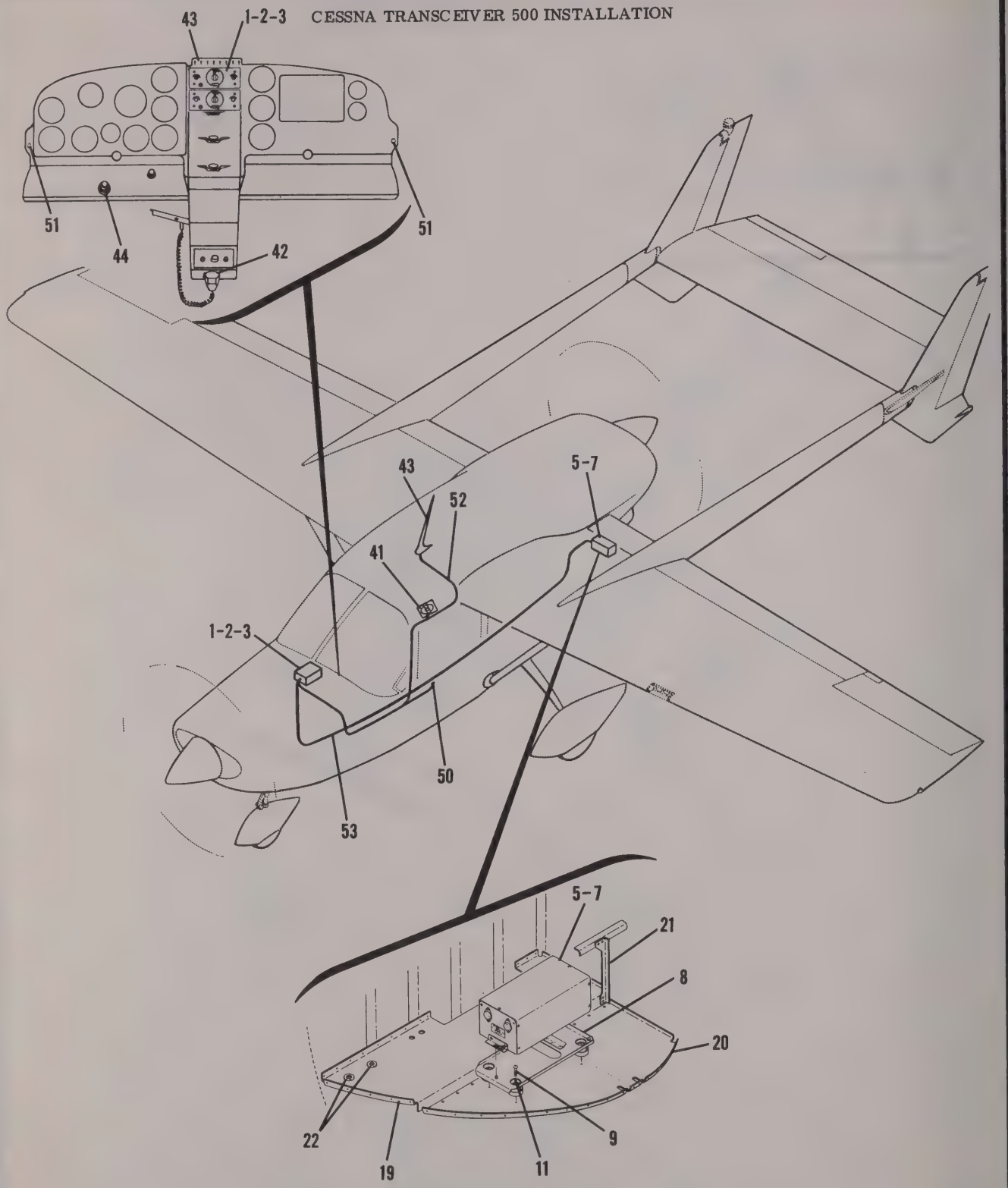


## 336 SERIAL 336-0001 & ON

Figure 2-4. Cessna Transceiver 500 Installation - Sheet 5

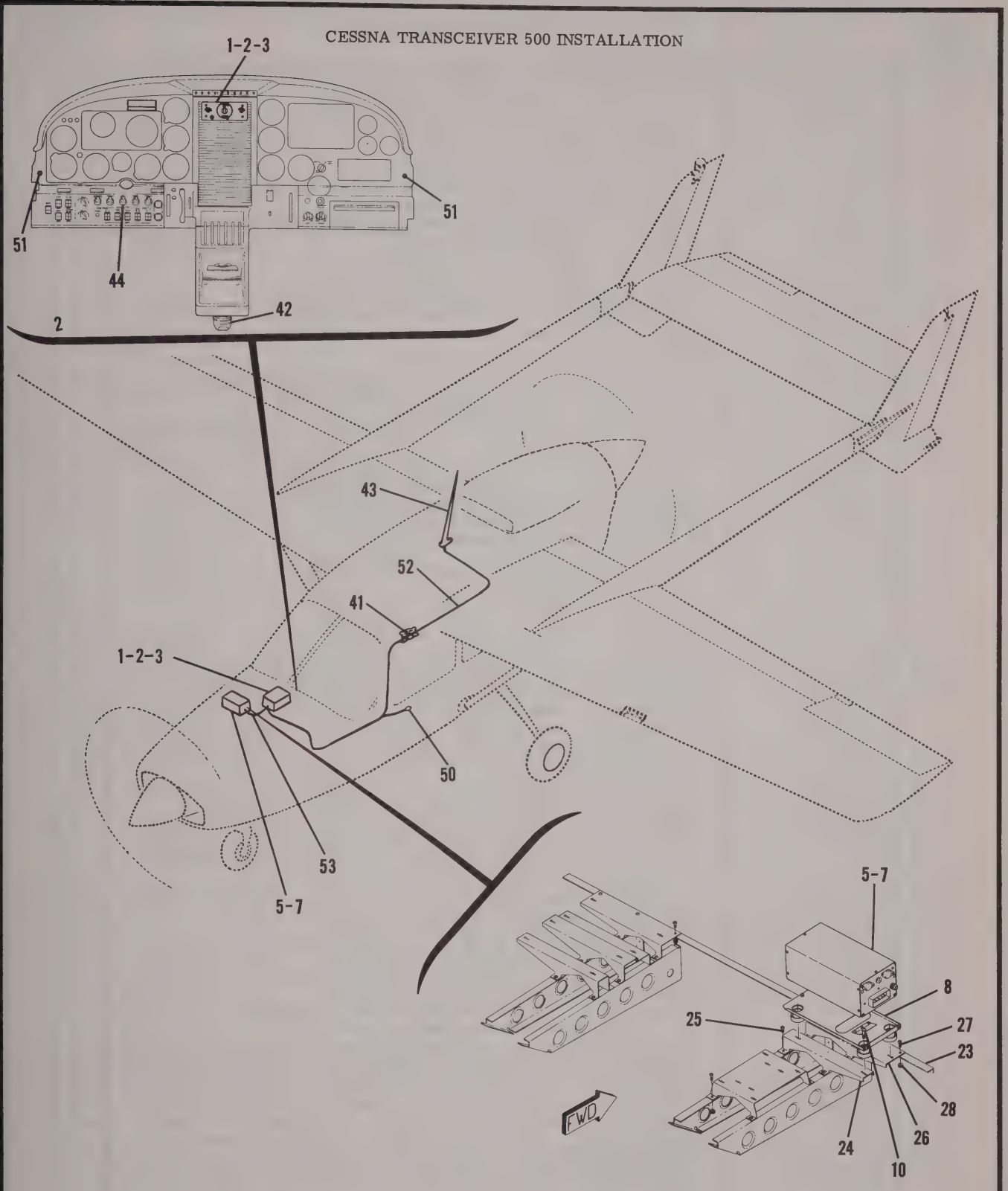


## 337 SERIAL 337-0001 & ON

Figure 2-4. Cessna Transceiver 500 Installation - Sheet 6

| FIGURE AND INDEX NO. | PART NUMBER | DESCRIPTION<br>1 2 3 4 5 6 7 | UNITS PER ASSY | USABLE ON CODE |
|---|---|---|---|---|
| 2-4- | | CESSNA TRANSCEIVER 500 INSTL---------- | N/P | |
| - 1 | 28410-1000 | TRANSCEIVER - TYPE RT-302A - 14 & 28 VOLT ---------- THRU 1964 ONLY - WHEN EXHAUSTED USE 33200-1000 FOR ALL SPARES | 1 | |
| | 27591 | MOUNTING - TYPE M-303A - SINGLE - NON TSO USED--------- ONLY WITH 28410-1000 TRANSCEIVER | A/R | |
| | 27594 | MOUNTING - TYPE M-304A - DUAL-NON TSO USED --------- ONLY WITH 28410-1000 TRANSCEIVERS | A/R | |
| | 26780 | MOUNTING - TYPE M-301A - SINGLE TSO-----USED ---------- ONLY WITH 28410-1000 TRANSCEIVER | A/R | |
| | 26790 | MOUNTING - TYPE M-302A - DUAL TSO USED ---------- ONLY WITH 28410-1000 TRANSCEIVERS | A/R | |
| | | ATTACHING PARTS | | |
| | S1021Z6-8 | SCREW - 6 REQD FOR DUAL MOUNTS-----ALL EXCEPT 336 --------- | 4 | |
| | NAS446-2-3 | NUT - 6 REQD FOR DUAL MOUNTS ALL EXCEPT 336 --------- | 4 | |
| | AN515-6R8 | SCREW - 6 REQD FOR DUAL MOUNTS-----336 ONLY ---------- | 4 | |
| | | ---*--- | | |
| - 2 | 33200-1000 | TRANSCEIVER - TYPE RT-302G-10 - DOMESTIC ONLY---------- 14 & 28 VOLT 1965 & ON AND ALL SPARES WHEN 28410-1000 IS EXHAUSTED | A/R | |
| - 3 | 33580-1000 | TRANSCEIVER - TYPE RT-302H - 14 & 28 VOLT - EXPORT--------- 114.0 TO 132.95 MC | 1 | |
| | 33370 | MOUNTING - TYPE M-301G - SINGLE TSO-----USE ONLY --------- WITH 33580-1000 OR 33200-1000 TRANSCEIVERS | A/R | |
| | 0770722-1 | MOUNTING - DUAL TSO USE ONLY WITH ---------- 33580-1000 OR 33200-1000 TRANSCEIVERS | A/R | |
| | 0770723-1 | MOUNTING - 3 OR 4 TSO RADIOS USED ONLY WITH --------- 33580-1000 OR 33200-1000 TRANSCEIVERS | A/R | |
| | | ATTACHING PARTS | | |
| | AN515-6R6 | SCREW - 6 REQD FOR DUAL MOUNTING & 8 REQD ON 3 OR --------- 4 STACK MOUNTING | 4 | |
| | | ---*--- | | |
| - 4 | 28420-0014 | * DYNAVERTER - TYPE DV-302A - 14 VOLT-----THRU 1964 ONLY ---- WHEN EXHAUSTED USE 32380-0014 FOR ALL SPARES | A/R | |
| - 5 | 28420-0028 | * DYNAVERTER - TYPE DV-302A - 28 VOLT-----THRU 1964 ONLY----- WHEN EXHAUSTED USE 32380-0028 FOR ALL SPARES | A/R | |
| - 6 | 32380-0014 | DYNAVERTER - TYPE DV-302B - 14 VOLT-----1965 & ON AND ALL SPARES WHEN 28420-0014 IS EXHAUSTED | A/R | |
| - 7 | 32380-0028 | DYNAVERTER - TYPE DV-302B - 28 VOLT-----1965 & ON AND ALL SPARES WHEN 28420-0028 IS EXHAUSTED | A/R | |
| - 8 | 24900 | MOUNTING-DYNAVERTER - TYPE M-335A ---------- ATTACHING PARTS | 1 | |
| - 9 | AN515-8R16 | SCREW ALL MODELS EXCEPT 337 ---------- | 4 | |
| - 10 | AN515-8R8 | SCREW 337 ONLY ---------- | 4 | |
| - 11 | AN936A8 | WASHER-----ALL MODELS EXCEPT 337 ---------- | 4 | |
| - 12 | MS20365-832C | NUT 205, 206, P206, U206, TP206, TU206 & 336 --------- | 4 | |
| - 13 | A8K75 | RIVNUT-----182, 210 & T210---------- | 4 | |
| | | ---*--- | | |
| - 14 | 1270627-85 | SIDE ANGLE ASSY - L.H. SIDE - STD EQUIP 205, 206, ---- P206, U206, TP206 & TU206 | REF | |
| - 15 | 1270627-86 | SIDE ANGLE ASSY - R.H. SIDE - STD EQUIP 205, 206, ---- P206, U206, TP206 & TU206 | REF | |
| - 16 | 1270627-29 | SIDE ANGLE ASSY - L.H. SIDE - OPTIONAL LOWER LOCATION ---- 205, 206, P206, U206, TP206 & TU206 | A/R | |
| - 17 | 1270627-30 | SIDE ANGLE ASSY - R.H. SIDE - OPTIONAL LOWER LOCATION ---- 205, 206, P206, U206, TP206 & TU206 | A/R | |
| - 18 | 1270627-70 | ATTACH ANGLE USED FOR STD OR OPT LOCATIONS --------- 205, 206, P206, U206, TP206 & TU206 | 2 | |
| | | AUX RADIO SHELF - AFT LOCATION-----336 ONLY ---------- | N/P | |
| - 19 | 1470078-2 | SHELF-UPPER FWD PART OF SHELF---------- | 1 | |
| - 20 | 1470078-3 | SHELF-LOWER AFT PART OF SHELF---------- | 1 | |
| - 21 | 1470078-4 | POST---------- | 1 | |
| - 22 | MS35489-11S | GROMMET ---------- | 2 | |
| - 23 | 1553003-10 | STIFFENER - INSTALLED AS STD EQUIP 337 ONLY --------- | REF | |
| - 24 | 1513635-1 | SUPPORT ASSY 337 ONLY ---------- ATTACHING PARTS | 1 | |
| - 25 | AN515-8R8 | SCREW ---------- | 4 | |
| | MS20365-832C | NUT ---------- | 4 | |
| | | ---*--- | | |

CONTINUED ON NEXT PAGE

| FIGURE AND INDEX NO. | PART NUMBER | DESCRIPTION<br>1 2 3 4 5 6 7 | UNITS PER ASSY | USABLE ON CODE |
|---|---|---|---|---|
| 2-4- 26 | 1513629-1 | SUPPORT ASSY 337 ONLY<br>ATTACHING PARTS | 1 | |
| - 27 | AN515-8R8 | SCREW | 4 | |
| - 28 | MS20365-832C | NUT<br>---*--- | 4 | |
| - 29 | 1270645-1 | PLATE-RADIO MOUNTING ALL 180 & 185 MODELS AND USED ON LOWER ALTERNATE LOCATION ON MODELS 205, 206, P206, U206, TP206 & TU206<br>ATTACHING PARTS | 1 | |
| - 30 | AN515-8R7 | SCREW | 4 | |
| - 31 | MS20365-832C | NUT<br>---*--- | 4 | |
| - 32 | 0770712-1 | ANGLE - STD EQUIPMENT-----180 & 185 ONLY | REF | |
| - 33 | 0770049-1 | ANGLE 180 & 185 ONLY<br>ATTACHING PARTS | 1 | |
| - 34 | AN515-8R10 | SCREW | 2 | |
| - 35 | S355 | SPACER | 2 | |
| - 36 | MS20365-832C | NUT<br>---*--- | 2 | |
| - 37 | 0770713-1 | ANGLE-RADIO RACK EQUIPMENT---- 180 & 185 ONLY<br>ATTACHING PARTS | 2 | |
| - 38 | AN515-8R10 | SCREW | 4 | |
| - 39 | S355 | SPACER | 4 | |
| - 40 | MS20365-832C | NUT<br>---*--- | 4 | |
| - 41 | | SPEAKER INSTALLATION SEE FIGURE 9-3 | 1 | |
| - 42 | | MICROPHONE INSTALLATION SEE FIGURE 9-4 | 1 | |
| - 43 | | VHF ANTENNA INSTALLATION SEE FIGURE 8-1 | 1 | |
| | | RADIO COOLING INSTALLATION - USED WITH MORE THAN ONE RADIO SEE FIGURE 10-1 | A/R | |
| - 44 | | TRANSMITTER SELECTOR SWITCH INSTALLATION-----SEE FIGURE 9-1 | A/R | |
| | | RADIO NOISE FILTERS SEE FIGURE 10-5 | A/R | |
| - 45 | | DROPPING RESISTOR - FLT INST & RADIO DIAL LT SEE FIGURE 10-2 336 & 337 ONLY | 1 | |
| - 46 | 0413126-5 | RHEOSTAT 180 & 185 ONLY | 1 | |
| - 47 | S1390-3 | KNOB ASSY 180 & 185 ONLY | 1 | |
| - 48 | R-12 1/2-75-RS34 | RHEOSTAT 182, 205, 206, P206, U206, TP206, TU206, 210 & T210 ONLY | 1 | |
| - 49 | S1163-2 | KNOB-RHEOSTAT 182, 205, 206, P206, U206, TP206, TU206, 210 & T210 ONLY | 1 | |
| - 50 | S1360-10 | CIRCUIT BREAKER ALL MODELS EXCEPT 336 & 337 | 1 | |
| - 51 | S1360-5 | CIRCUIT BREAKER 336 & 337 ONLY | 1 | |
| - 52 | S1103-1 | PHONE JACK | 1 | |
| | 0770039-1 | HEADSET | 1 | |
| - 53 | | CABLE ASSY - TRANSCEIVER TO VHF ANT | N/P | |
| | RG-58A/U | COAXIAL CABLE - BULK ITEM | A/R | |
| | UG-913/U | PLUG-COAXIAL - RT ANGLE | 1 | |
| | UG-88C/U | PLUG-COAXIAL | 1 | |
| - 54 | | CABLE ASSY - TRANSCEIVER TO DYNAVERTER | N/P | |
| | 28808 | PLUG - 20 PIN | 2 | |
| | 126-217 | PLUG - 5 PIN - CONNECTS TO DYNAVERTER | 1 | |
| | | RELAY INSTALLATION - ANTENNA USED ONLY ON DUAL INSTALLATIONS WHEN A TRANSCEIVER 500 IS COMBINED WITH A NAV/COM 500. 337 MODEL THRU 1965 ONLY | N/P | |
| - 55 | 0813626-2 | RELAY-ANTENNA<br>ATTACHING PARTS | 1 | |
| - 56 | AN515-4R4 | SCREW<br>---*--- | 4 | |
| - 57 | 0812534-2 | RELAY BRACKET<br>ATTACHING PARTS | 1 | |
| - 58 | 0411059-1 | SHOCKMOUNT | 2 | |
| - 59 | AN936A8 | WASHER | 4 | |
| - 60 | AN340-8 | NUT<br>---*--- | 4 | |
| | | * NOTE WHEN REPLACING A TYPE DV-302A DYNAVERTER WITH A DV-302B, REFER TO APPENDIX I FOR REQUIRED WIRE HARNESS CHANGES | | |

CESSNA NAV/COM 500 RADIO INSTALLATION

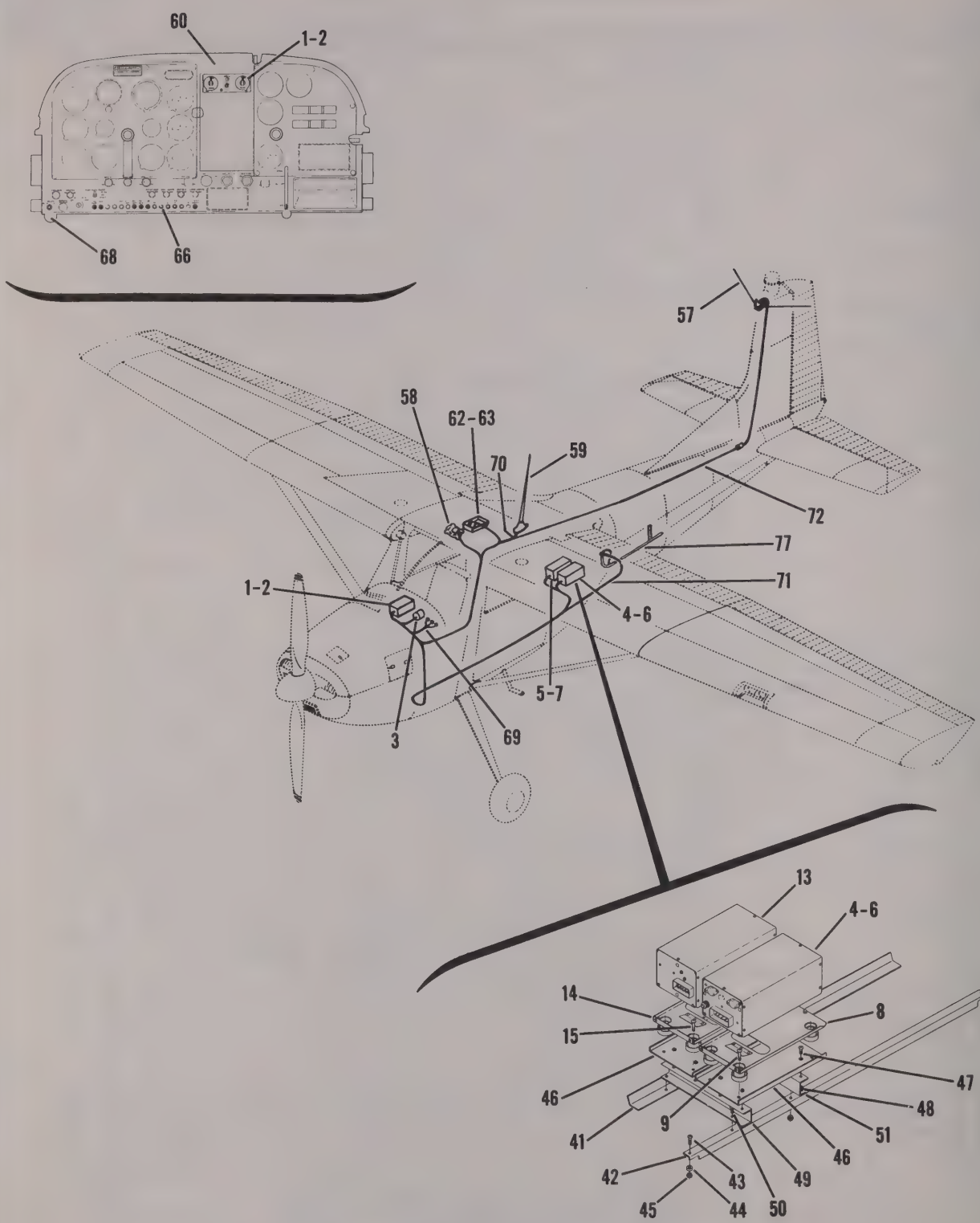


**180 SERIAL 18051446 & ON**
**185 SERIAL 185-0777 & ON**

Figure 2-5. Cessna Nav/Com 500 Radio Installation - Sheet 1

CESSNA NAV/COM 500 RADIO INSTALLATION

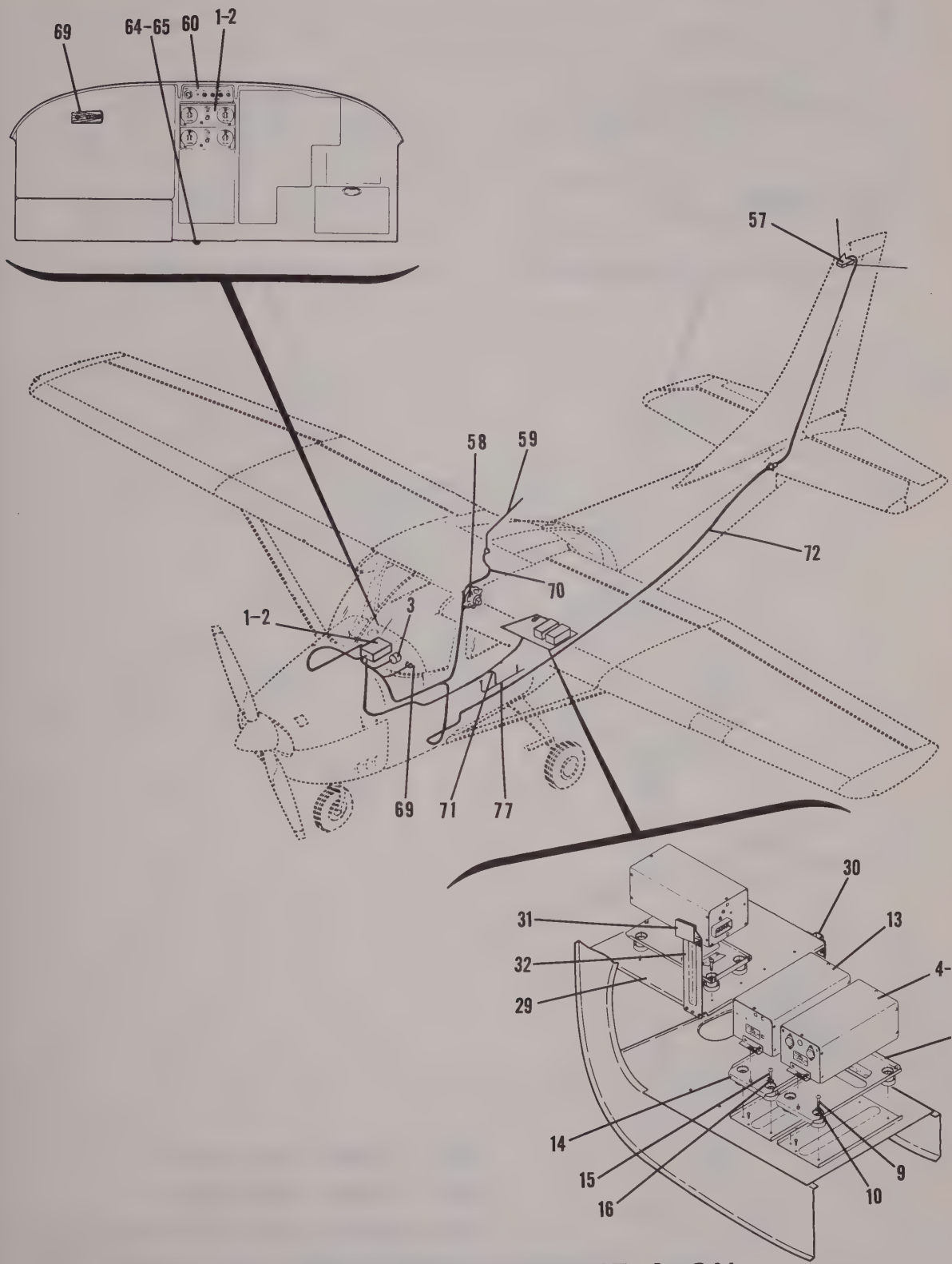


**182 SERIAL 18254347 & ON**

Figure 2-5. Cessna Nav/Com 500 Radio Installation - Sheet 2

CESSNA NAV/COM 500 RADIO INSTALLATION

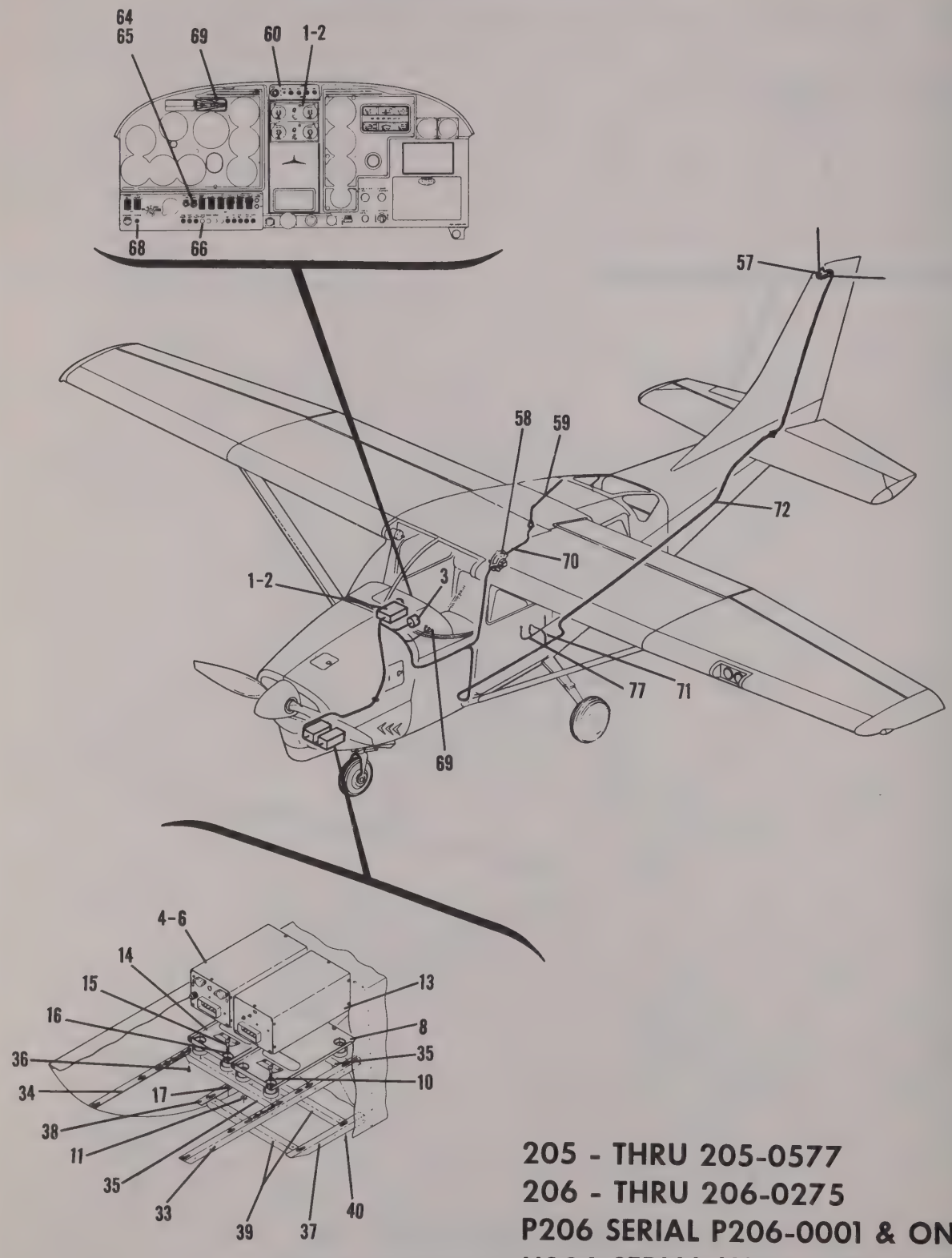


**205 - THRU 205-0577**
**206 - THRU 206-0275**
**P206 SERIAL P206-0001 & ON**
**U206 SERIAL U206-0276 & ON**

Figure 2-5. Cessna Nav/Com 500 Radio Installation - Sheet 3

CESSNA NAV/COM 500 RADIO INSTALLATION

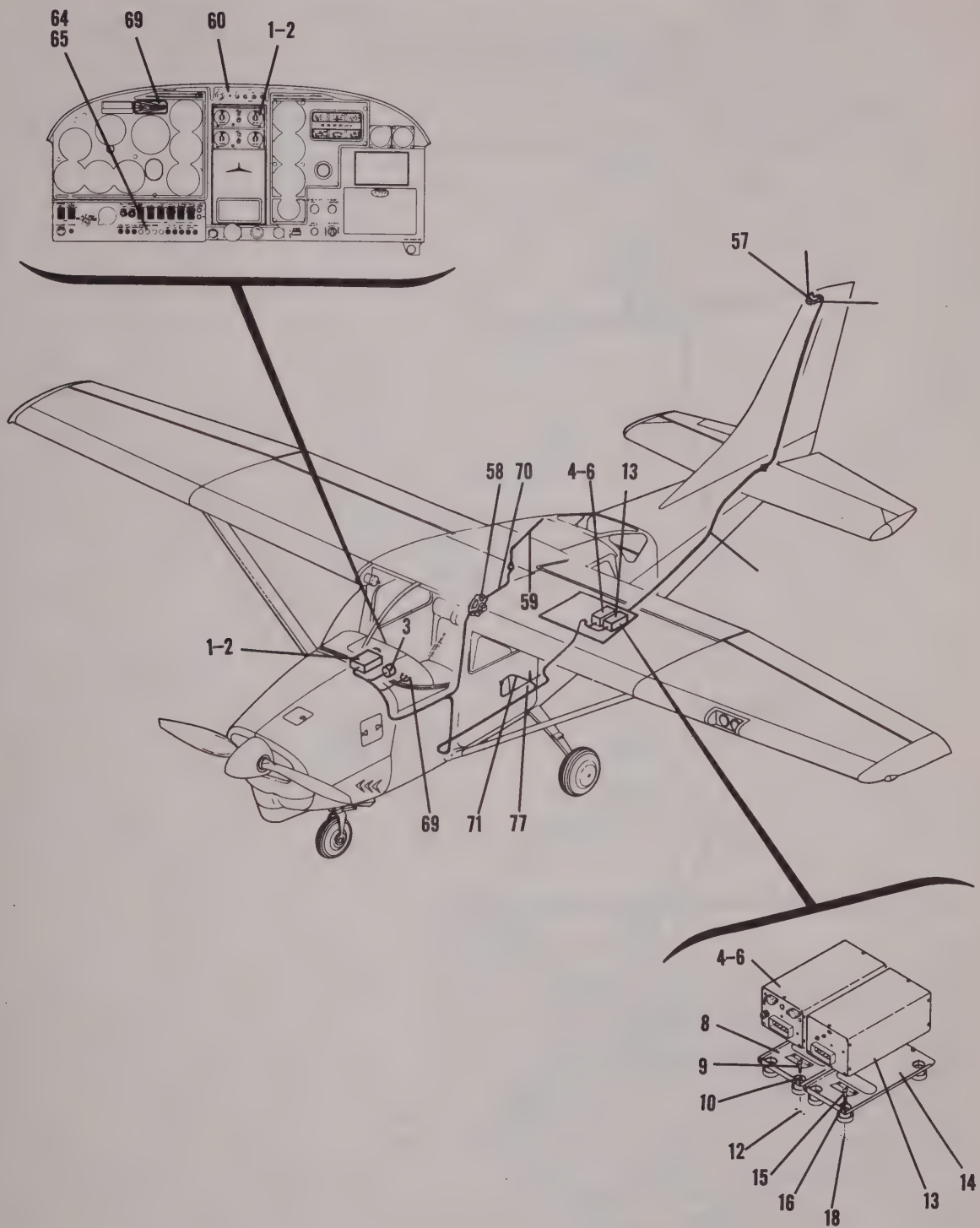


## 210 SERIAL 21058111 & ON

Figure 2-5. Cessna Nav/Com 500 Radio Installation - Sheet 4

CESSNA NAV/COM 500 RADIO INSTALLATION

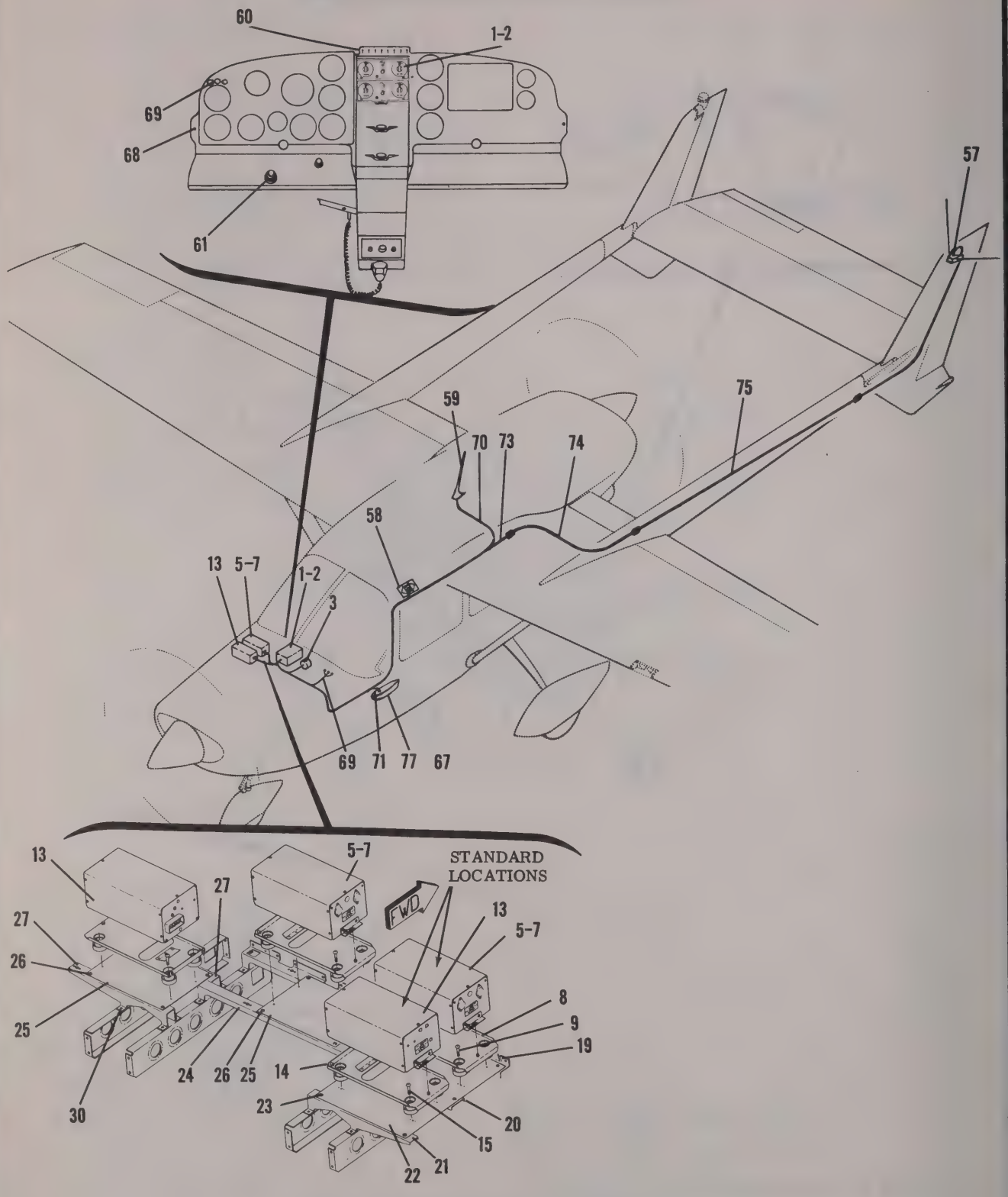


## 336 SERIAL 336-0001 & ON

Figure 2-5. Cessna Nav/Com 500 Radio Installation - Sheet 5

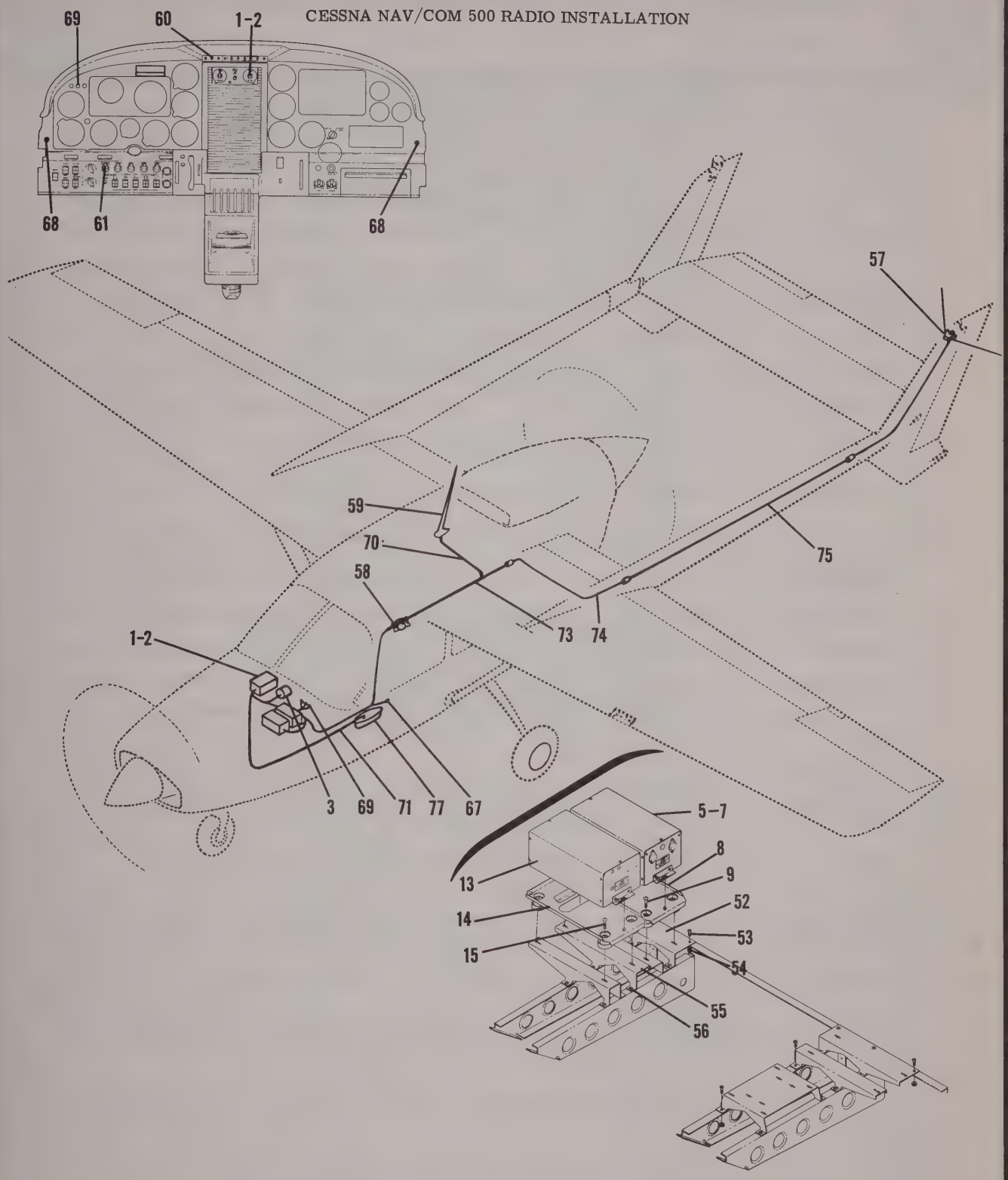


## 337 SERIAL 337-0001 & ON

Figure 2-5. Cessna Nav/Com 500 Radio Installation - Sheet 6

| FIGURE AND INDEX NO. | PART NUMBER | DESCRIPTION<br>1 2 3 4 5 6 7 | UNITS PER ASSY | USABLE ON CODE |
|---|---|---|---|---|
| 2-5- | | CESSNA NAV-COM 500 RADIO INSTALLATION---------- | N/P | |
| - 1 | 24650-1000 | TRANSCEIVER - TYPE RT-317A - 14 & 28 VOLT ---------- | 1 | |
| | | THRU 1964 ONLY - WHEN EXHAUSTED USE 33220-1000 | | |
| | 27591 | MOUNTING - TYPE 303A - SINGLE NON TSO USED ONLY ---- | A/R | |
| | | WITH 24650-1000 TRANSCEIVER | | |
| | 27594 | MOUNTING - TYPE M-304A - DUAL NON TSO USED ONLY ---- | A/R | |
| | | WITH 24650-1000 TRANSCEIVER | | |
| | 26780 | MOUNTING - TYPE M-301A - SINGLE TSO-----USED ONLY ---------- | A/R | |
| | | WITH 24650-1000 TRANSCEIVER | | |
| | 26790 | MOUNTING - TYPE M-302A - DUAL TSO USED ONLY WITH ---- | A/R | |
| | | 24650-1000 TRANSCEIVER | | |
| | | ATTACHING PARTS | | |
| | S1021Z6-8 | SCREW - 6 REQD FOR DUAL MOUNTS-----ALL EXCEPT 336 ---------- | 4 | |
| | NAS446-2-3 | NUT - 6 REQD FOR DUAL MOUNTS ALL EXCEPT 336 ---------- | 4 | |
| | AN515-6R8 | SCREW - 6 REQD FOR DUAL MOUNTS-----336 ONLY ---------- | 4 | |
| | | ---*--- | | |
| - 2 | 33220-1000 | TRANSCEIVER - TYPE RT-317G-10 - 14 & 28 VOLT ---------- | 1 | |
| | | 1965 & ON AND ALL SPARES WHEN 24650-1000 IS EXHAUSTED | | |
| | 33370 | MOUNTING - TYPE M-301G - SINGLE TSO-----USED ONLY WITH ---- | A/R | |
| | | 33220-1000 TRANSCEIVER | | |
| | 0770722-1 | MOUNTING - DUAL TSO USED ONLY WITH 33220-1000 ---------- | A/R | |
| | | TRANSCEIVER | | |
| | 0770723-1 | MOUNTING - 3 OR 4 TSO RADIOS USED ONLY WITH ---------- | A/R | |
| | | 33220-1000 TRANSCEIVER | | |
| | | ATTACHING PARTS | | |
| | AN515-6R6 | SCREW - 6 REQD FOR DUAL MOUNTING & 8 REQD ON 3 OR 4 ---- | 4 | |
| | | STACK MOUNTING | | |
| | | ---*--- | | |
| - 3 | 27490 | INDICATOR - TYPE IN-317A-1---------- | 1 | |
| | | ATTACHING PARTS | | |
| | AN507B632R12 | SCREW ---------- | 3 | |
| | NAS446-2-3 | NUT ---------- | 3 | |
| | | ---*--- | | |
| - 4 | 28490-0014 | *DYNAVERTER - TYPE DV-317A-1 - 14 VOLT THRU 1964 ONLY---- | A/R | |
| | | - WHEN EXHAUSTED USE 31630-0014 FOR ALL SPARES | | |
| - 5 | 28490-0028 | *DYNAVERTER - TYPE DV-317A-1 - 28 VOLT THRU 1964 ONLY---- | A/R | |
| | | - WHEN EXHAUSTED USE 31630-0028 FOR ALL SPARES | | |
| - 6 | 31630-0014 | *DYNAVERTER - TYPE DU-317B-1 - 14 VOLT 1965 & ON AND ---- | A/R | |
| | | ALL SPARES WHEN 28490-0014 IS EXHAUSTED | | |
| - 7 | 31630-0028 | *DYNAVERTER - TYPE DU-317B-1 - 28 VOLT 1965 & ON---------- | A/R | |
| | | AND ALL SPARES WHEN 28490-0028 IS EXHAUSTED | | |
| - 8 | 24900 | MOUNTING-DYNAVERTER - TYPE M-335A ---------- | 1 | |
| | | ATTACHING PARTS | | |
| - 9 | AN515-8R16 | SCREW ---------- | 4 | |
| - 10 | AN936A8 | WASHER---------- | 4 | |
| - 11 | MS20365-832C | NUT 205, 206, P206, U206, PT206, TU206, 336 & 337 ONLY | 4 | |
| - 12 | A8K75 | RIVNUT-----182, 210 & T210 ONLY ---------- | 4 | |
| | | ---*--- | | |
| - 13 | 24660 | CONVERTER - TYPE B-317A ---------- | 1 | |
| - 14 | 24900 | MOUNTING - TYPE M-335A ---------- | 1 | |
| | | ATTACHING PARTS | | |
| - 15 | AN515-8R16 | SCREW ---------- | 4 | |
| - 16 | AN936A8 | WASHER---------- | 4 | |
| - 17 | MS20365-832C | NUT 205, 206, P206, U206, TP206 & TU206 ONLY ---------- | 4 | |
| - 18 | A8K75 | RIVNUT-----182, 210 & T210 ONLY ---------- | 4 | |
| | | ---*--- | | |
| - 19 | 1470056-1 | SUPPORT ASSY 336 ONLY ---------- | 1 | |
| | | ATTACHING PARTS | | |
| | AN515-8R8 | SCREW ---------- | 4 | |
| | AN960-8 | WASHER---------- | 4 | |
| | MS20365-832C | NUT ---------- | 4 | |
| | | ---*--- | | |

CONTINUED ON NEXT PAGE

| FIGURE AND INDEX NO. | PART NUMBER | DESCRIPTION<br>1 2 3 4 5 6 7 | UNITS PER ASSY | USABLE ON CODE |
|---|---|---|---|---|
| 2-5- 20 | 1470056-4 | SUPPORT ASSY 336 ONLY<br>ATTACHING PARTS | 1 | |
| | AN515-8R8 | SCREW | 4 | |
| | AN960-8 | WASHER | 4 | |
| | MS20365-832C | NUT<br>---*--- | 4 | |
| - 21 | 1470056-7 | SUPPORT ASSY 336 ONLY<br>ATTACHING PARTS | 1 | |
| | AN515-8R8 | SCREW | 4 | |
| | AN960-8 | WASHER | 4 | |
| | MS20365-832C | NUT<br>---*--- | 4 | |
| - 22 | 1470097-1 | PLATE ASSY 336 ONLY<br>ATTACHING PARTS | 1 | |
| - 23 | AN515-10R6 | SCREW<br>---*--- | 6 | |
| - 24 | 1470056-13 | SUPPORT ASSY - ALT LOCATION 336 ONLY<br>ATTACHING PARTS | 1 | |
| | AN515-8R8 | SCREW | 4 | |
| | AN960-8 | WASHER | 4 | |
| | MS20365-832C | NUT<br>---*--- | 4 | |
| - 25 | 1470098-1 | PLATE ASSY - ALT LOCATION ---336 ONLY<br>ATTACHING PARTS | 2 | |
| - 26 | AN515-8R8 | SCREW<br>---*--- | 8 | |
| - 27 | 1470056-9 | SUPPORT ASSY - ALT LOCATION 336 ONLY<br>ATTACHING PARTS | 2 | |
| - 28 | AN515-8R8 | SCREW | 8 | |
| | AN960-8 | WASHER | 8 | |
| | MS20365-832C | NUT<br>---*--- | 8 | |
| - 29 | 0770650-1 | AUX RADIO SHELF 182 ONLY | 1 | |
| - 30 | 0770651-1 | SUPPORT - AUX RADIO SHELF ---182 ONLY | 1 | |
| - 31 | 0770651-2 | SUPPORT - AUX RADIO SHELF ---182 ONLY | 1 | |
| - 32 | 0770651-3 | SUPPORT - AUX RADIO SHELF ---182 ONLY | 1 | |
| - 33 | 1270627-85 | SIDE ANGLE ASSY - LH SIDE - STD EQUIPMENT 205,<br>206, P206, U206, TP206 & TU206 ONLY | 1 | |
| - 34 | 1270627-86 | SIDE ANGLE ASSY - RH SIDE - STD EQUIPMENT 205,<br>206, P206, U206, TP206 & TU206 ONLY | 1 | |
| - 35 | 1270627-69 | ATTACH ANGLE 205, 206, P206, U206, TP206 & TU206 ONLY<br>ATTACHING PARTS | 1 | |
| - 36 | AN520-10R6 | SCREW<br>---*--- | 4 | |
| - 3 | 1270627-33 | SIDE ANGLE ASSY - ALT LOCATION----205, 206,<br>P206, U206, TP206 & TU206 ONLY | 1 | |
| - 38 | 1270627-34 | SIDE ANGLE ASSY - ALT LOCATION----205, 206,<br>P206, U206, TP206 & TU206 ONLY | 1 | |
| - 39 | 1270627-69 | ATTACH ANGLE - ALT LOCATION 205, 206,<br>P206, U206, TP206 & TU206 ONLY<br>ATTACHING PARTS | 1 | |
| - 40 | AN520-10R6 | SCREW<br>---*--- | 4 | |
| - 41 | 0770712-1 | ANGLE - STD EQUIPMENT----180 & 185 ONLY | REF | |
| - 42 | 0770049-1 | ANGLE 180 & 185 ONLY<br>ATTACHING PARTS | 1 | |
| - 43 | AN515-8R10 | SCREW | 2 | |
| - 44 | S355 | SPACER | 2 | |
| - 45 | MS20365-832C | NUT<br>---*--- | 2 | |
| - 46 | 1270645-1 | PLATE-RADIO MOUNTING ALL 180 & 185 MODELS AND USED ON<br>LOWER ALTERNATE LOCATION ON MODELS 205, 206,<br>P206, U206, TP206 & TU206 ONLY<br>ATTACHING PARTS | 2 | |
| - 47 | AN515-8R7 | SCREW | 4 | |
| - 48 | MS20365-832C | NUT<br>---*--- | 4 | |

CONTINUED ON NEXT PAGE

| FIGURE AND INDEX NO. | PART NUMBER | DESCRIPTION<br>1 2 3 4 5 6 7 | UNITS PER ASSY | USABLE ON CODE |
|---|---|---|---|---|
| 2-5- 49 | 0770067-9 | CHANNEL - FRONT 180 & 185 ONLY | 1 | |
| | | ATTACHING PARTS | | |
| - 50 | AN3-4A | BOLT | 2 | |
| | AN960-102 | WASHER | 2 | |
| | MS20365-832C | NUT | 2 | |
| | | ---*--- | | |
| - 51 | 0770067-10 | CHANNEL - REAR 180 & 185 ONLY | 1 | |
| | | ATTACHING PARTS | | |
| | AN3-4A | BOLT | 2 | |
| | AN960-10L | WASHER | 2 | |
| | MS20365-832C | NUT | 2 | |
| | | ---*--- | | |
| - 52 | 1513629-2 | SUPPORT ASSY - L.H. 337 ONLY | 1 | |
| | | ATTACHING PARTS | | |
| - 53 | AN515-8R8 | SCREW | 4 | |
| - 54 | MS20365-832C | NUT | 4 | |
| | | ---*--- | | |
| - 55 | 1513630-1 | SUPPORT ASSY 337 ONLY | 1 | |
| | | ATTACHING PARTS | | |
| - 56 | AN515-8R8 | SCREW | 4 | |
| | MS20365-832C | NUT | 4 | |
| | | ---*--- | | |
| - 57 | | OMNI ANTENNA INSTALLATION ----SEE FIGURE 8-2 | 1 | |
| - 58 | | SPEAKER INSTALLATION SEE FIGURE 9-3 | 1 | |
| - 59 | | VHF ANTENNA INSTALLATION SEE FIGURE 8-1 | 1 | |
| | | RADIO COOLING INSTALLATION---- SEE FIGURE 10-1 | A/R | |
| | | RADIO NOISE FILTERS SEE FIGURE 10-5 | A/R | |
| | | MICROPHONE INSTALLATION SEE FIGURE 9-4 | 1 | |
| - 60 | | TRANSMITTER SELECTOR SWITCH INSTALLATION-----SEE | A/R | |
| | | FIGURE 9-1 | | |
| - 61 | | DROPPING RESISTOR - FLT INST & RADIO DIAL LT | 1 | |
| | | SEE FIGURE 10-2 336 & 337 ONLY | | |
| - 62 | 0413126-5 | RHEOSTAT 180 & 185 ONLY | 1 | |
| - 63 | S1390-3 | KNOB ASSY 180 & 185 ONLY | 1 | |
| - 64 | R-12 1/2-75-RS34 | RHEOSTAT 182, 205, 206, P206, U206 & 210 ONLY | | |
| - 65 | S1163-2 | KNOB-RHEOSTAT 182, 205, 206, P206, U206 & 210 ONLY | 1 | |
| - 66 | S1360-10 | CIRCUIT BREAKER ALL MODELS EXCEPT 336 & 337 | 1 | |
| - 67 | S1360-5 | CIRCUIT BREAKER 336 & 337 ONLY | 1 | |
| - 68 | S1103-1 | PHONE JACK | 1 | |
| | 0770039-1 | HEADSET | 1 | |
| - 69 | | CABLE ASSY-DYNAVERTER TO MKR BCN LIGHTS | N/P | |
| | MS25237-328 | LAMP | A/R | |
| | 40 OHM 3 WATT | RESISTOR | 1 | |
| | MS25041-4 | LIGHT-AMBER | 1 | |
| | MS25041-1 | LIGHT-CLEAR | 1 | |
| | MS25041-10 | LIGHT-BLUE | 1 | |
| | 126-217 | * CONNECTOR-----USED ON DV-317A-1 DYNAVERTER ONLY | A/R | |
| | 126-195 | CONNECTOR-----USED ON DV-317B-1 DYNAVERTER ONLY | A/R | |
| - 70 | | CABLE ASSY - TRANSCEIVER TO VHF ANT | N/P | |
| | RG-58A/U | COAXIAL CABLE - BULK ITEM | A/R | |
| | UG-913/U | PLUG-COAXIAL RT ANGLE - RECUR-XMTR END-----182, | 1 | |
| | | 205, 206, P206, U206 & 210 ONLY | | |
| | UG-88C/U | PLUG-COAXIAL | 1 | |
| - 71 | | CABLE ASSY - DYNAVERTER TO MKR BCN ANT | N/P | |
| | RG-58A/U | COAXIAL CABLE - BULK ITEM | A/R | |
| | UG-88C/U | PLUG-COAXIAL DYNAVERTER END | 1 | |
| | UG-88C/U | PLUG-COAXIAL 336 & 337 ONLY ANT END | 1 | |
| | S1367-1-8 | TERMINAL ANT END ALL EXCEPT 336 | 1 | |
| | S1367-2-8 | TERMINAL ANT END ALL EXCEPT 336 | 1 | |

CONTINUED ON NEXT PAGE

| FIGURE AND INDEX NO. | PART NUMBER | DESCRIPTION 1 2 3 4 5 6 7 | UNITS PER ASSY | USABLE ON CODE |
|---|---|---|---|---|
| 2-5- 72 | | CABLE ASSY - TRANSCEIVER TO OMNI ANT ALL MODELS EXCEPT 336 & 337 | N/P | |
| | RG-58A/U | COAXIAL CABLE - BULK ITEM | A/R | |
| | 8019-1 TNC | PLUG-COAXIAL TRANSCEIVER END | 1 | |
| | UG-88C/U | PLUG-COAXIAL ANT END | 1 | |
| - 73 | | CABLE ASSY - TRANSCEIVER TO WING ROOT JUNCTION 336 AND 337 ONLY | N/P | |
| | 8019-1 TNC | PLUG-COAXIAL - RT ANGLE - TRANSCEIVER END | 1 | |
| | RG-58A/U | COAXIAL CABLE - BULK ITEM | A/R | |
| | UG-88C/U | PLUG-COAXIAL | 1 | |
| - 74 | | CABLE ASSY - WING ROOT TO BOOM CONN 336 & 337 ONLY | N/P | |
| | RG-58A/U | COAXIAL CABLE - BULK ITEM | A/R | |
| | UG-89/U | JACK-COAXIAL WING ROOT END | 1 | |
| | UG-88C/U | PLUG-COAXIAL BOOM CONN END | 1 | |
| - 75 | | COAXIAL CABLE - BOOM CONN TO BALUN STUB 336 & 337 ONLY | N/P | |
| | RG-58A/U | COAXIAL CABLE - BULK ITEM | A/R | |
| | UG-89/U | JACK-COAXIAL BOOM CONN END | 1 | |
| | UG-88C/U | PLUG-COAXIAL BALUN STUB END | 1 | |
| - 76 | | CABLE ASSY - TRANSCEIVER TO DYNAVERTER CONN & INDICATOR | N/P | |
| | 126-810 | CONNECTOR R-T UNIT & DYNAVERTER AMBE | 2 | |
| | 126-153 | CONNECTOR CONVERTER AMBE | 1 | |
| | AN3106A20-27S | CONNECTOR INDICATOR | 1 | |
| | AN3057-12 | ADAPTER | 1 | |
| - 77 | | MARKER BEACON ANTENNA INSTALLATION SEE FIGURE 8-4 | N/P | |
| | 8002-1 TNC | TEE CONNECTOR-COAXIAL REQD FOR DUAL OMNI RCVRS PLACE TEE ON #1. RCVR & CONNECT ANT LEAD-IN TO THIS RCVR. | A/R | |
| | 8019-1 TNC | PLUG-COAXIAL RT ANGLE #2 RCVR PLUG | 1 | |
| | 8001-1 TNC | PLUG-COAXIAL CONNECT TO TEE ON #1 RCVR | 1 | |
| | | RELAY INSTALLATION - ANTENNA USED ONLY ON DUAL INSTALLATIONS WHEN A TRANSCEIVER 500 IS COMBINED WITH A NAV/COM 500. | N/P | |
| - 78 | 0813626-2 | RELAY-ANTENNA | 1 | |
| | | ATTACHING PARTS | | |
| - 79 | AN515-4R4 | SCREW | 4 | |
| | | ---*--- | | |
| - 80 | 0812534-2 | RELAY BRACKET | 1 | |
| | | ATTACHING PARTS | | |
| - 81 | 0411059-1 | SHOCKMOUNT | 2 | |
| - 82 | AN936A8 | WASHER | 4 | |
| - 83 | AN340-8 | NUT | 4 | |
| | | ---*--- | | |
| | | * NOTE WHEN REPLACING TYPE DV-317A-1 DYNAVERTER WITH DV-317B-1 REFER TO APPENDIX I FOR REQUIRED WIRE HARNESS CHANGES | | |

CESSNA ADF 500 RADIO INSTALLATION

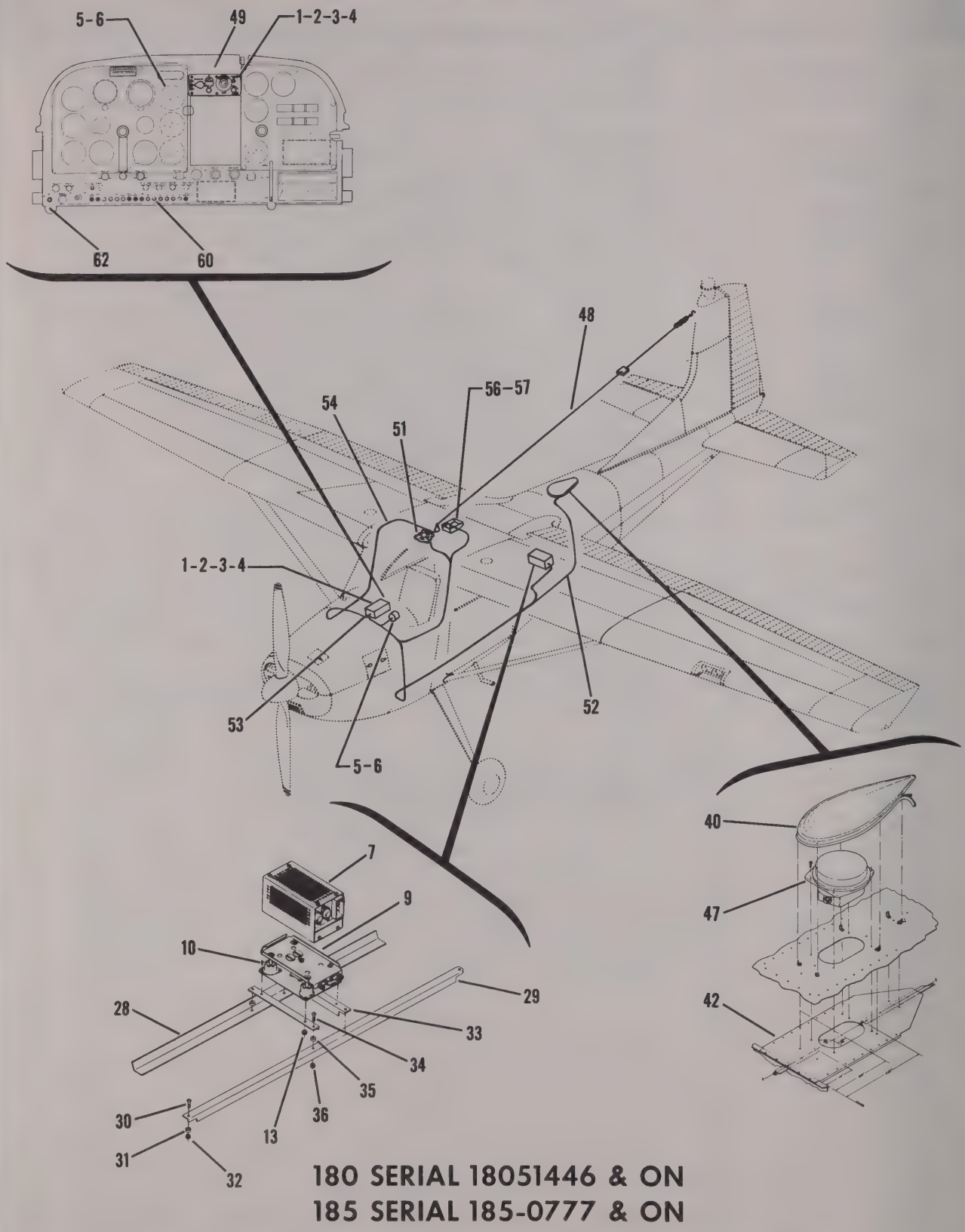


**180 SERIAL 18051446 & ON**
**185 SERIAL 185-0777 & ON**

Figure 2-6. Cessna ADF 500 (Type 318A - Rotatable Loop) Radio Installation - Sheet 1

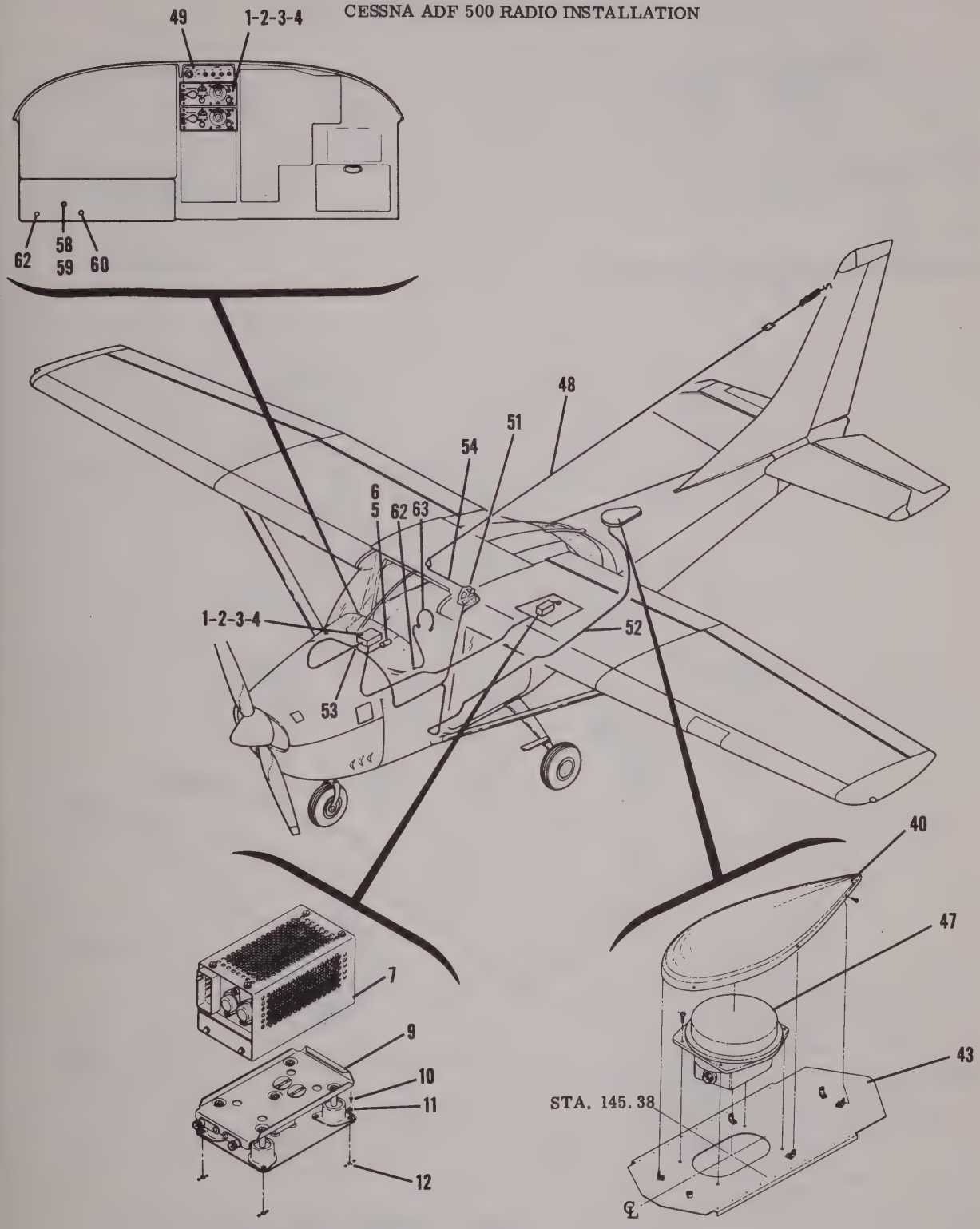


## 182 SERIAL 18254347 & ON

Figure 2-6. Cessna ADF 500 (Type 318A - Rotatable Loop) Radio Installation - Sheet 2

CESSNA ADF 500 RADIO INSTALLATION

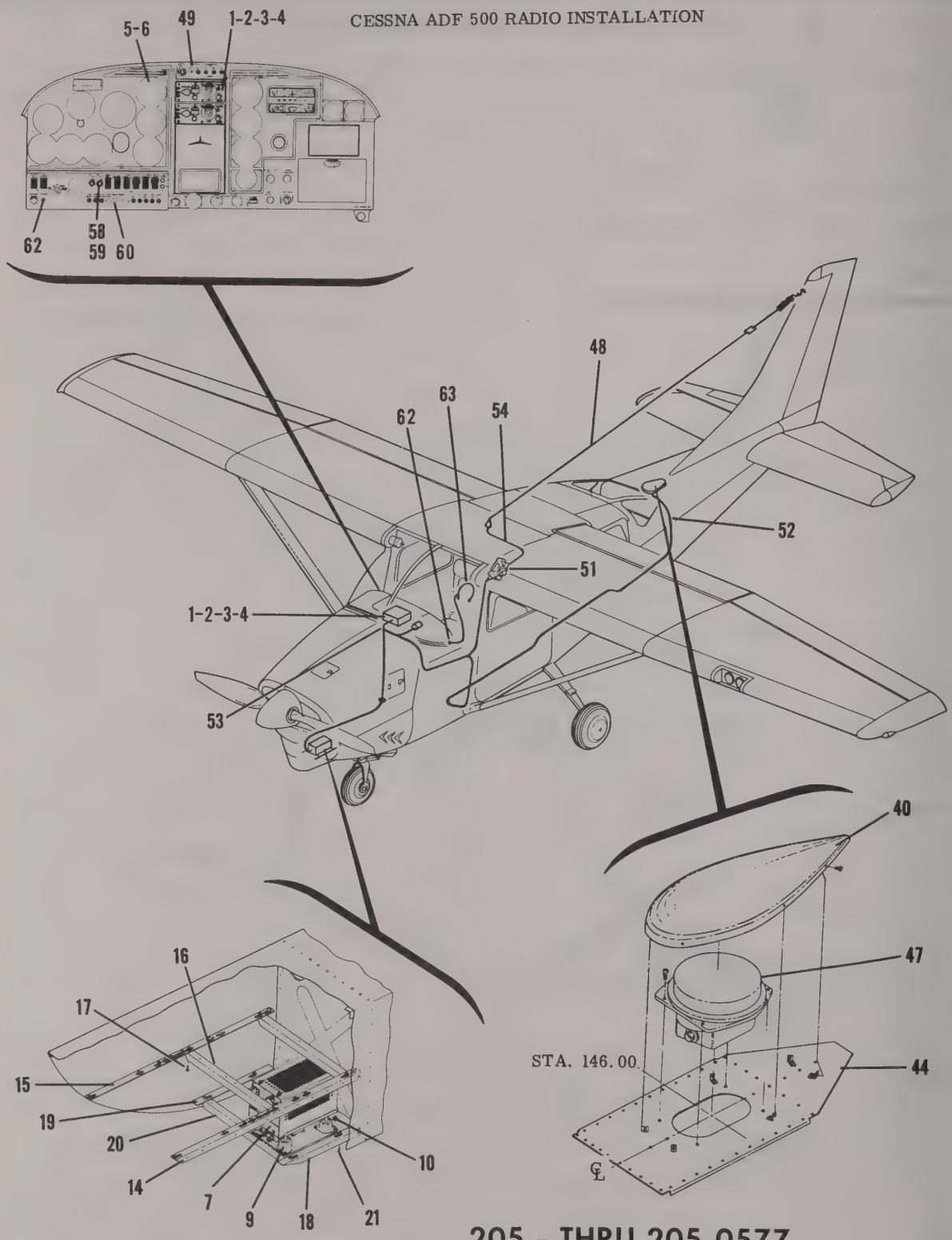


205 - THRU 205-0577
206 - THRU 206-0275
P206 SERIAL P206-0001 & ON
U206 SERIAL U206-0276 & ON

Figure 2-6. Cessna ADF 500 (Type 318A - Rotatable Loop) Radio Installation - Sheet 3

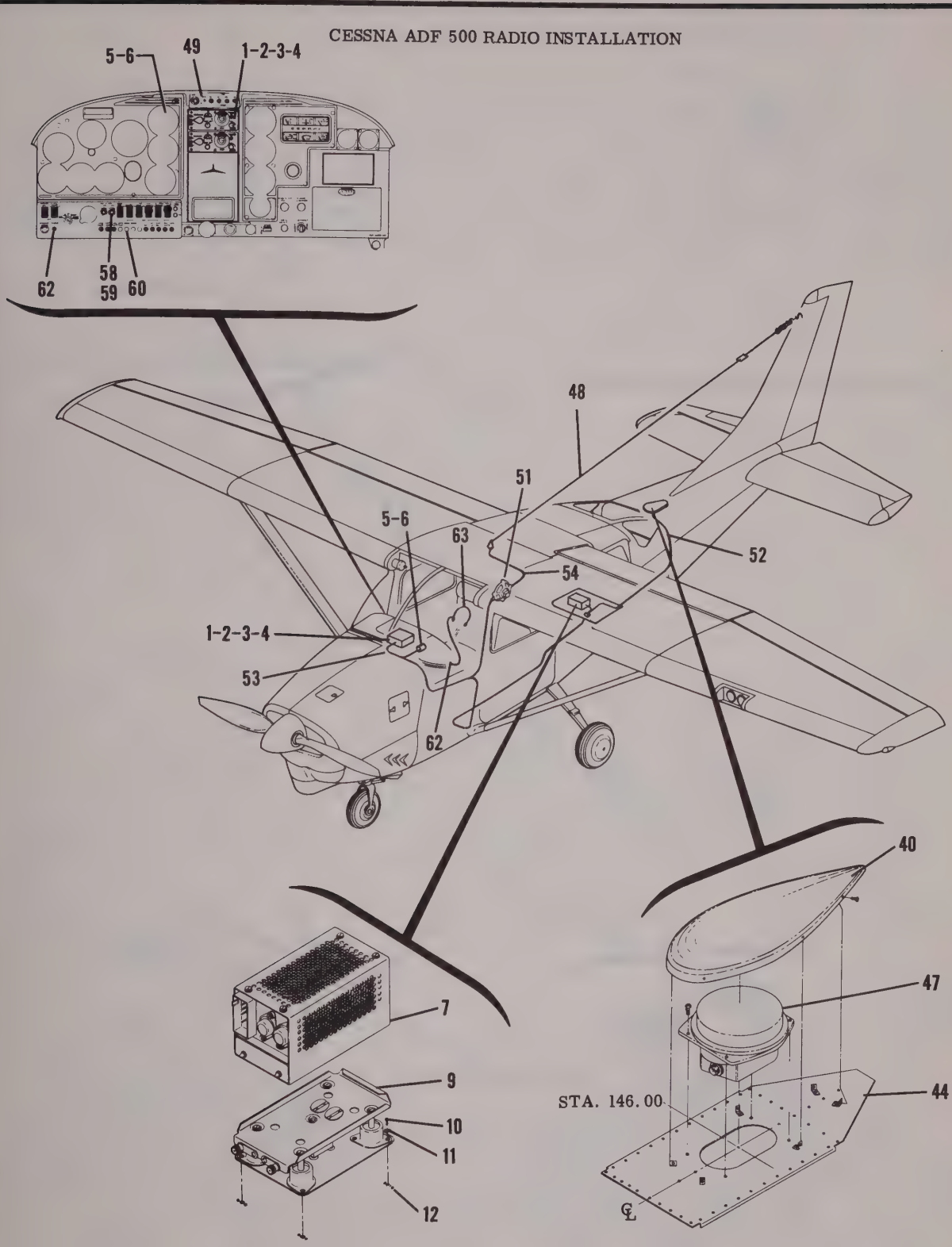


## 210 SERIAL 21058111 & ON

Figure 2-6. Cessna ADF 500 (Type 318A - Rotatable Loop) Radio Installation - Sheet 4

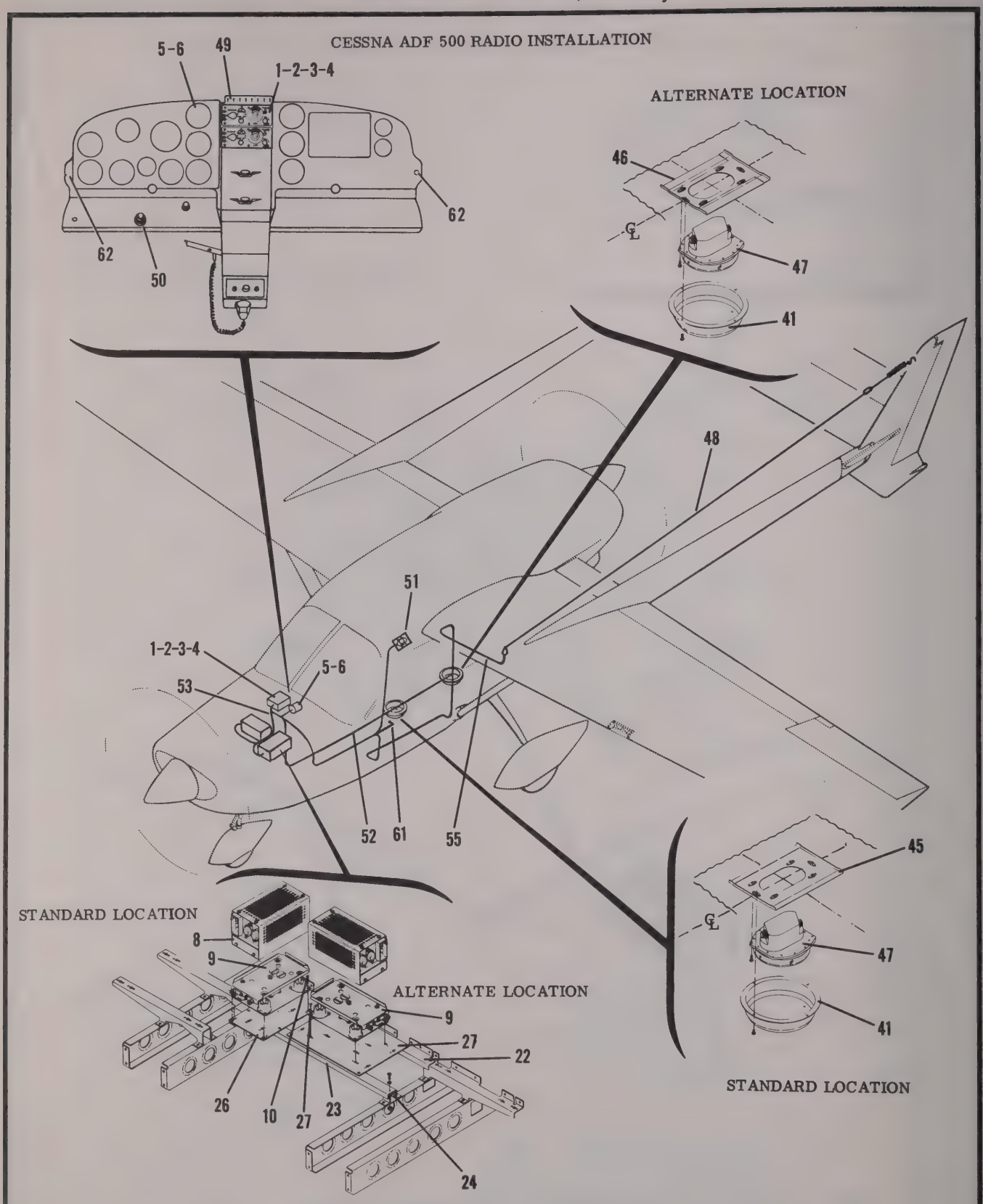


## 336 SERIAL 336-0001 & ON

Figure 2-6. Cessna ADF 500 (Type 318A - Rotatable Loop) Radio Installation - Sheet 5

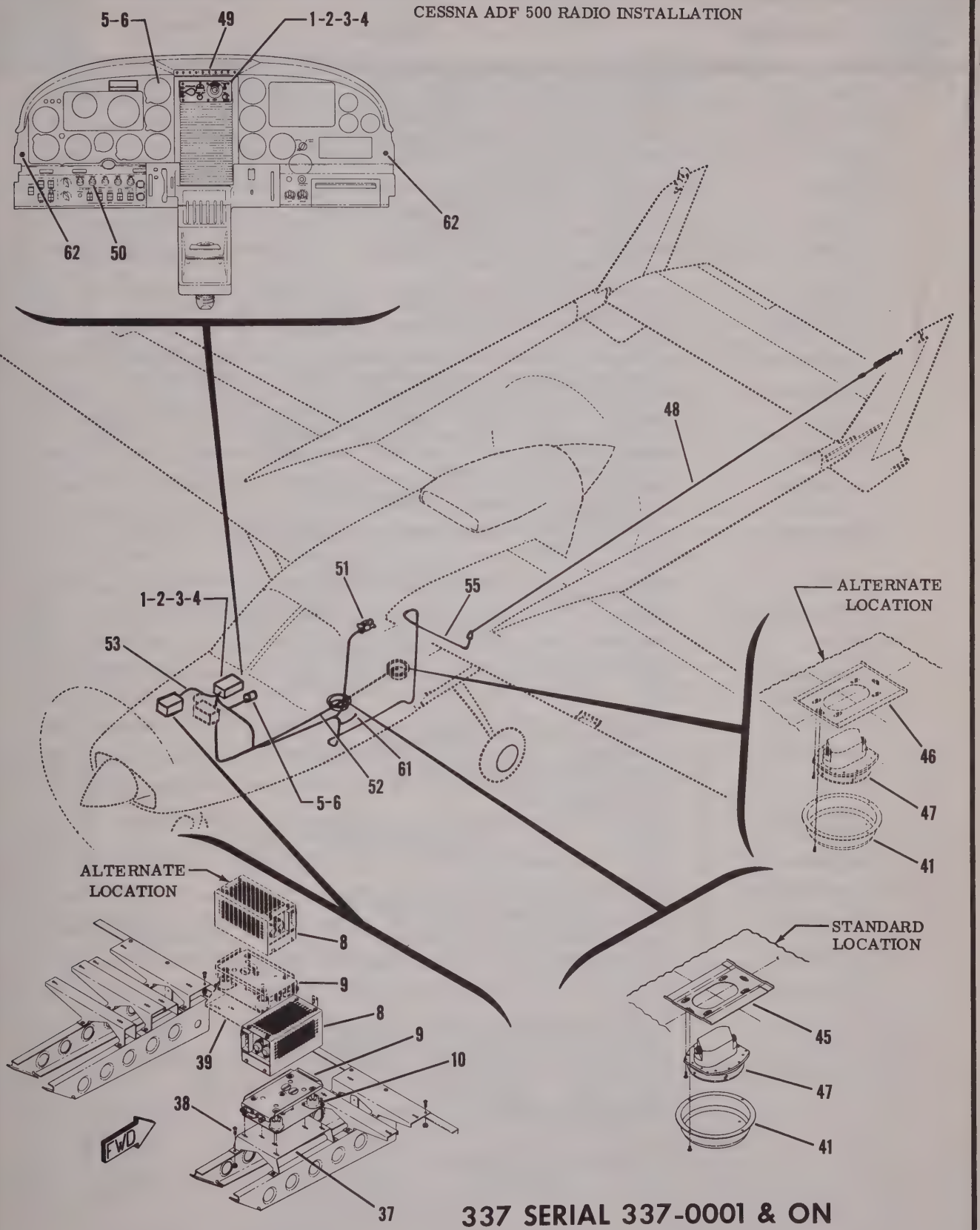


Figure 2-6. Cessna ADF 500 (Type 318A - Rotatable Loop) Radio Installation - Sheet 6

| FIGURE AND INDEX NO. | PART NUMBER | DESCRIPTION<br>1 2 3 4 5 6 7 | UNITS PER ASSY | USABLE ON CODE |
|---|---|---|---|---|
| 2-6- | | CESSNA ADF 500 RADIO INSTALLATION - ROTATABLE LOOP --------- | N/P | |
| - 1 | 25400-1000 | RECEIVER-WITHOUT BFO - TYPE R-318A - 14 & 28 VOLT --------- THRU 1964 ONLY - WHEN EXHAUSTED USE 33230-1000 | A/R | |
| - 2 | 25400-1300 | RECEIVER-WITH BFO - TYPE R-318A - 14 & 28 VOLT --------- THRU 1964 ONLY - WHEN EXHAUSTED USE 33230-1200 | A/R | |
| | 27591 | * MOUNTING - TYPE 303A - SINGLE NON TSO USED ONLY WITH TYPE R-318A RECEIVER | A/R | |
| | 27594 | * MOUNTING - TYPE M-304A - DUAL NON TSO USED ONLY ---- WITH TYPE R-318A RECEIVER | A/R | |
| | 26780 | * MOUNTING - TYPE M-301A - SINGLE TSO-----USED ONLY --------- WITH TYPE R-318A RECEIVER | A/R | |
| | 26790 | * MOUNTING - TYPE M-302A - DUAL TSO USED ONLY --------- WITH TYPE R-318A RECEIVER | A/R | |
| | | ATTACHING PARTS | | |
| | S1021Z6-8 | SCREW - 6 REQD FOR DUAL MOUNTS-----ALL EXCEPT 336 --------- | 4 | |
| | NAS446-2-3 | NUT - 6 REQD FOR DUAL MOUNTS ALL EXCEPT 336 --------- | 4 | |
| | AN515-6R8 | SCREW - 6 REQD FOR DUAL MOUNTS-----336 ONLY ---------- | 4 | |
| | | ---*--- | | |
| - 3 | 33230-1000 | * RECEIVER - WITHOUT BFO - TYPE R-318G-10 - 14 & 28 VOLT ---- 1965 & ON AND ALL SPARES WHEN 25400-1000 IS EXHAUSTED | A/R | |
| - 4 | 33230-1200 | * RECEIVER-WITH BFO - TYPE R-318G-12 - 14 & 28 VOLT --------- 1965 & ON AND ALL SPARES WHEN 25400-1300 IS EXHAUSTED | A/R | |
| | 33370 | MOUNTING - TYPE M-301G - SINGLE TSO-----USED ONLY --------- WITH TYPE R-318G-10 OR R-318G-12 RECEIVERS | A/R | |
| | 0770722-1 | MOUNTING - DUAL TSO USED ONLY WITH TYPE R-318G-10 ---- OR R-318G-12 RECEIVERS | A/R | |
| | 0770723-1 | MOUNTING - 3 OR 4 TSO RADIOS USED ONLY WITH TYPE ---- R-318G-10 OR R-318G-12 RECEIVERS | A/R | |
| | | ATTACHING PARTS | | |
| | AN515-6R6 | SCREW - 6 REQD FOR DUAL MOUNTING & 8 REQD ON 3 OR 4 ---- STACK MOUNTING | 4 | |
| | | ---*--- | | |
| - 5 | 27500 | INDICATOR - SINGLE RCVR - TYPE IN-318A-1---------- | A/R | |
| | | ATTACHING PARTS | | |
| | AN507B632R12 | SCREW ---------- | 4 | |
| | | ---*--- | | |
| - 6 | 27470 | INDICATOR - DUAL RCVR - TYPE IN-13A-1 ---------- | 1 | |
| | | ATTACHING PARTS | | |
| | AN507B632R12 | SCREW ---------- | 3 | |
| | NAS446-2-3 | NUT ---------- | 3 | |
| | | ---*--- | | |
| - 7 | 26960-0014 | DYNAVERTER - TYPE DV-318A - 14 VOLT---------- WHEN EXHAUSTED USE 34660-0014 | A/R | |
| - 8 | 26960-0028 | DYNAVERTER - TYPE DV-318A - 28 VOLT---------- WHEN EXHAUSTED USE 34660-0028 | A/R | |
| - 9 | 21650 | MOUNTING - TYPE M-28A---------- | 1 | |
| | | ATTACHING PARTS | | |
| - 10 | AN515-8R16 | SCREW ---------- | 4 | |
| - 11 | AN936A8 | WASHER---------- | 4 | |
| - 12 | A8K75 | RIVNUT-----182, 210, T210 & 337 ONLY ---------- | 4 | |
| - 13 | MS20365-832C | NUT ALL MODELS EXCEPT 182, 210, T210 & 337 --------- | 4 | |
| | | ---*--- | | |
| - 14 | 1270627-85 | SIDE ANGLE ASSY - LH SIDE - STD EQUIP 205, 206, ---- P206, U206, TP206 & TU206 ONLY | REF | |
| - 15 | 1270627-86 | SIDE ANGLE ASSY - RH SIDE - STD EQUIP 205, 206, ---- P206, U206, TP206 & TU206 ONLY | REF | |
| - 16 | 1270627-70 | ATTACH ANGLE 205, 206, P206, U206, TP206 & TU206 ONLY | 2 | |
| | | ATTACHING PARTS | | |
| - 17 | AN520-10R6 | SCREW ---------- | 4 | |
| | | ---*--- | | |
| - 18 | 1270627-29 | SIDE ANGLE ASSY - LH SIDE - OPT LOWER LOCATION 205,---- 206, P206, U206, TP206 & TU206 ONLY | 1 | |
| - 19 | 1270627-30 | SIDE ANGLE ASSY - RH SIDE - OPT LOWER LOCATION 205,---- 206, P206, U206, TP206 & TU206 ONLY | 1 | |
| - 20 | 1270627-70 | ATTACH ANGLE - OPT LOWER LOCATION 205, 206, P206 ---- U206 TP206 & TU206 ONLY | 2 | |
| | | ATTACHING PARTS | | |

CONTINUED ON NEXT PAGE

| FIGURE AND INDEX NO. | PART NUMBER | DESCRIPTION<br>1 2 3 4 5 6 7 | UNITS PER ASSY | USABLE ON CODE |
|---|---|---|---|---|
| 2-6- 21 | AN520-10R6 | SCREW | 4 | |
| | | ---*--- | | |
| - 22 | 1470056-11 | SUPPORT ASSY - INSTALLED AS STD EQUIP 336 ONLY | REF | |
| | | ATTACHING PARTS | | |
| | AN515-8R8 | SCREW | 1 | |
| | AN960-8 | WASHER | 1 | |
| | MS20364-832C | NUT | 1 | |
| | | ---*--- | | |
| - 23 | 1470056-13 | SUPPORT ASSY 336 ONLY | 1 | |
| | | ATTACHING PARTS | | |
| | AN515-8R8 | SCREW | 2 | |
| | AN960-8 | WASHER | 2 | |
| | MS20364-832C | NUT | 2 | |
| | | ---*--- | | |
| - 24 | 1470113-7 | SUPPORT 336 ONLY | 1 | |
| | | ATTACHING PARTS | | |
| | AN515-8R8 | SCREW | 2 | |
| | AN960-8 | WASHER | 2 | |
| | MS20364-832C | NUT | 2 | |
| | | ---*--- | | |
| - 25 | 1470056-14 | SUPPORT ASSY 336 ONLY | 1 | |
| | | ATTACHING PARTS | | |
| | AN515-8R8 | SCREW | 3 | |
| | AN960-8 | WASHER | 3 | |
| | MS20364-832C | NUT | 3 | |
| | | ---*--- | | |
| - 26 | 1470113-5 | MOUNTING PLATE ASSY 336 ONLY | 1 | |
| | | ATTACHING PARTS | | |
| | NAS443-3-16 | SPACER | 8 | |
| | AN515-8R8 | SCREW | 8 | |
| | | ---*--- | | |
| - 27 | 1470098-1 | MOUNTING PLATE ASSY - ALT LOCATION 336 ONLY | 1 | |
| | | ATTACHING PARTS | | |
| | AN520-10R10 | SCREW | 4 | |
| | | ---*--- | | |
| - 28 | 0770712-1 | ANGLE - STD EQUIPMENT-----180 & 185 ONLY | REF | |
| - 29 | 0770049-1 | ANGLE 180 & 185 ONLY | 1 | |
| | | ATTACHING PARTS | | |
| - 30 | AN515-8R10 | SCREW | 1 | |
| - 31 | S355 | SPACER | 2 | |
| - 32 | MS20365-832C | NUT | 2 | |
| | | ---*--- | | |
| - 33 | 0770713-1 | ANGLE 180 & 185 ONLY | 2 | |
| | | ATTACHING PARTS | | |
| - 34 | AN515-8R10 | SCREW | 4 | |
| - 35 | S355 | SPACER | 4 | |
| - 36 | MS20365-832C | NUT | 4 | |
| | | ---*--- | | |
| - 37 | 1513631-1 | SUPPORT ASSY 337 ONLY | 1 | |
| | | ATTACHING PARTS | | |
| - 38 | AN515-8R8 | SCREW | 4 | |
| | | ---*--- | | |
| - 39 | 1513637-1 | BRACKET ASSY - ALT LOCATION 337 ONLY | 1 | |
| | | ATTACHING PARTS | | |
| | AN515-8R8 | SCREW | 4 | |
| | MS20365-832C | NUT | 4 | |
| | | ---*--- | | |
| - 40 | 19050 | LOOP HOUSING KIT-----ALL MODELS EXCEPT 336 & 337 | 1 | |
| | | ATTACHING PARTS | | |
| | AN515-6R6 | SCREW | 6 | |
| | | ---*--- | | |
| - 41 | 1470094-1 | LOOP HOUSING 336 & 337 ONLY | 1 | |
| | | ATTACHING PARTS | | |
| | AN515-8R8 | SCREW | 4 | |
| | NAS686 | NUTPLATE | 2 | |
| | | ---*--- | | |
| - 42 | 1270433-3 | DOUBLER 180 & 185 ONLY | 1 | |
| - 43 | 0770645-3 | LOOP MOUNTING PLATE ASSY 182 ONLY | 1 | |
| - 44 | 1270423-3 | LOOP DOUBLER ASSY 205, 206, P206, U206, TP206, | 1 | |
| | | TU206, 210 & T210 ONLY | | |
| - 45 | 1470091-1 | LOOP DOUBLER ASSY - FWD LOCATION 336 & 337 ONLY | 1 | |
| - 46 | 1470092-1 | LOOP DOUBLER ASSY - AFT LOCATION 336 & 337 ONLY | 1 | |
| - 47 | 18000 | LOOP ANTENNA - TYPE L-11 | 1 | |
| | | ATTACHING PARTS | | |
| | AN515-8R12 | SCREW | 4 | |
| | | ---*--- | | |

CONTINUED ON NEXT PAGE

| FIGURE AND INDEX NO. | PART NUMBER | DESCRIPTION<br>1 2 3 4 5 6 7 | UNITS PER ASSY | USABLE ON CODE |
|---|---|---|---|---|
| 2-6- 48 | | ADF - SENSE - ANTENNA INSTALLATION SEE FIGURE 8-6 | 1 | |
| - 49 | | AUDIO SELECTOR SWITCH INSTALLATION SEE FIGURE 9-1 | 1 | |
| - 50 | | DROPPING RESISTOR - FLT INST & RADIO DIAL LT SEE FIGURE 10-2 336 & 337 ONLY | A/R | |
| | | RADIO COOLING INSTALLATION---- SEE FIGURE 10-1 | A/R | |
| - 51 | | SPEAKER INSTALLATION SEE FIGURE 9-3 | 1 | |
| | | RADIO NOISE FILTER INSTALLATION SEE FIGURE 10-5 | A/R | |
| - 52 | 17985 | CABLE ASSY - RCVR TO LOOP | 1 | |
| - 53 | | CABLE ASSY - MAIN | N/P | |
| | 26795 | PLUG - 15 PIN - MATES RCVR | 1 | |
| | 27881 | PLUG - 19 PIN - MATES DYNAVERTER | 1 | |
| | AN3106A14S6S | PLUG - 6 PIN - MATES LOOP | 1 | |
| | AN3057-6 | ADAPTER | 1 | |
| | AN3108-14S2S | PLUG - 4 PIN - MATES INDICATOR | 1 | |
| | 27859 | FILTER ASSY - REQD FOR TSO ONLY | 1 | |
| - 54 | 18637 | CABLE ASSY - RCVR TO SENSE ANT-----ALL MODELS EXCEPT 336 & 337 | 1 | |
| - 55 | | CABLE ASSY - RCVR TO SENSE ANT 336 & 337 ONLY | 1 | |
| | K 109A | CABLE-COAXIAL 15 FT LONG | 1 | |
| | 85075 | PLUG-COAXIAL | 2 | |
| - 56 | 0413126-5 | RHEOSTAT 180 & 185 ONLY | 1 | |
| - 57 | S1390-3 | KNOB ASSY 180 & 185 ONLY | 1 | |
| - 58 | R-12 1/2-75-RS34 | RHEOSTAT 182, 205, 206, P206, U206, TP206, TU206, 210 & T210 ONLY | | |
| - 59 | S1163-2 | KNOB-RHEOSTAT 182, 205, 206, P206, U206, TP206, TU206, 210 & T210 ONLY & 210 ONLY | 1 | |
| - 60 | S1360-10 | CIRCUIT BREAKER ALL MODELS EXCEPT 336 & 337 | 1 | |
| - 61 | S1360-5 | CIRCUIT BREAKER 336 & 337 ONLY | 1 | |
| - 62 | S1103-1 | PHONE JACK | 1 | |
| - 63 | 0770039-1 | HEADSET ASSY | 1 | |

*NOTE THE NEW TYPE R-318G RECEIVERS MAY BE INSTALLED IN THE OLD A TYPE MOUNTINGS BY REMOVING SPACER BLOCK FROM BACK OF RECEIVER.

CESSNA NAV/OMNI 500 RADIO INSTALLATION

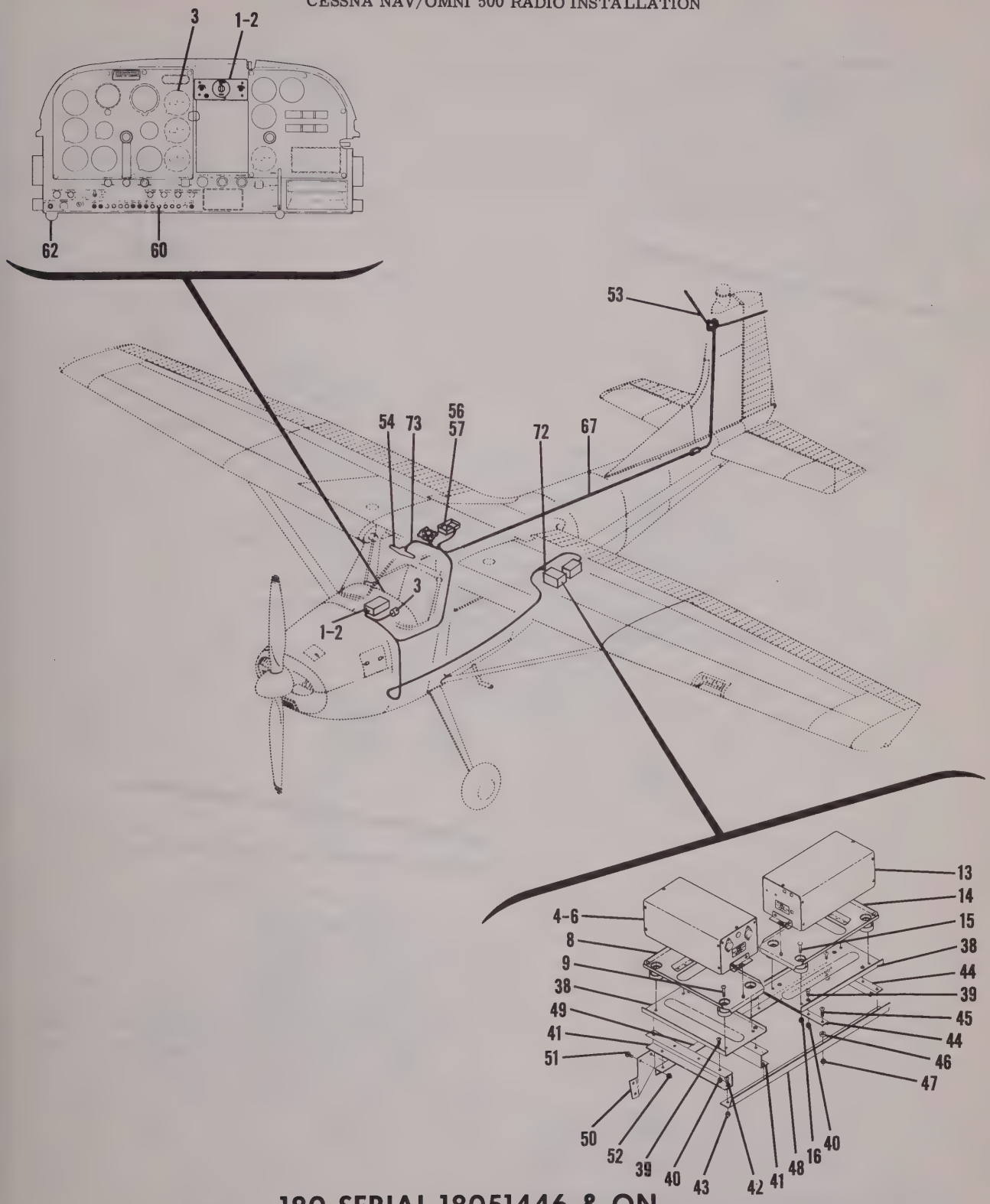


**180 SERIAL 18051446 & ON**
**185 SERIAL 185-0777 & ON**

Figure 2-7. Cessna Nav/Omni 500 Radio Installation - Sheet 1

CESSNA NAV/OMNI 500 RADIO INSTALLATION

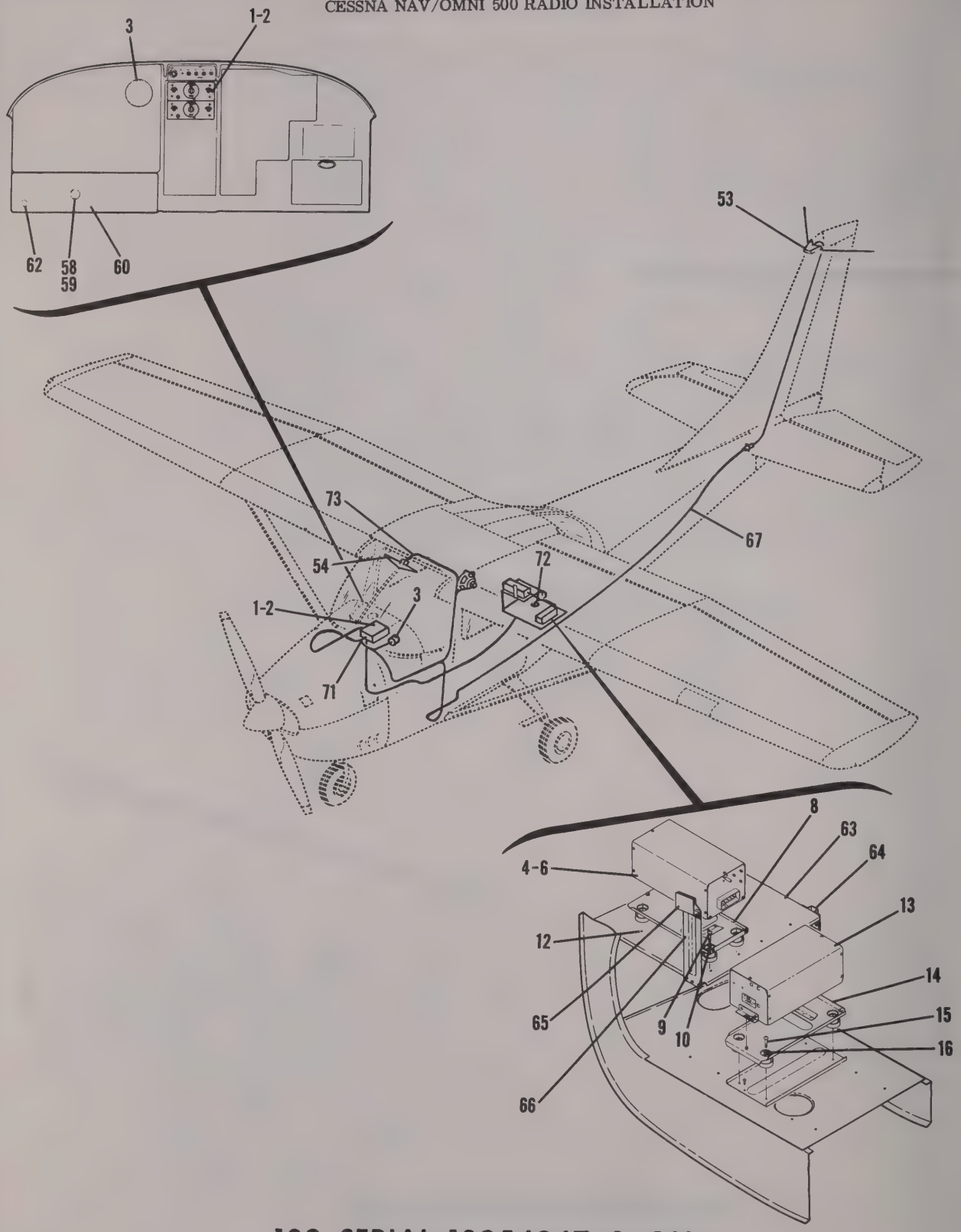


182 SERIAL 18254347 & ON

Figure 2-7. Cessna Nav/Omni 500 Radio Installation - Sheet 2

CESSNA NAV/OMNI 500 RADIO INSTALLATION

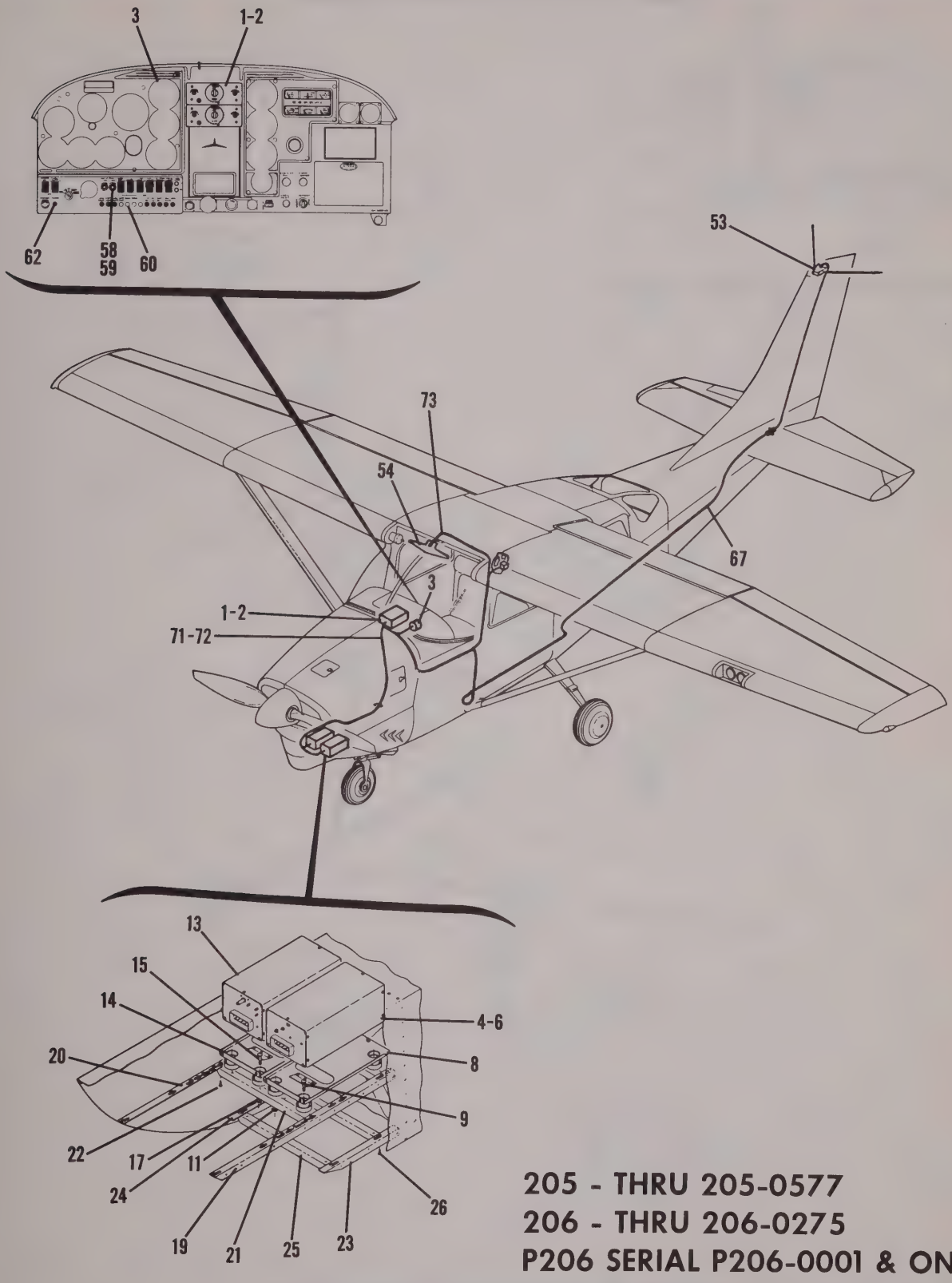


**205 - THRU 205-0577**
**206 - THRU 206-0275**
**P206 SERIAL P206-0001 & ON**
**U206 SERIAL U206-0276 & ON**

Figure 2-7. Cessna Nav/Omni 500 Radio Installation - Sheet 3

CESSNA NAV/OMNI 500 RADIO INSTALLATION

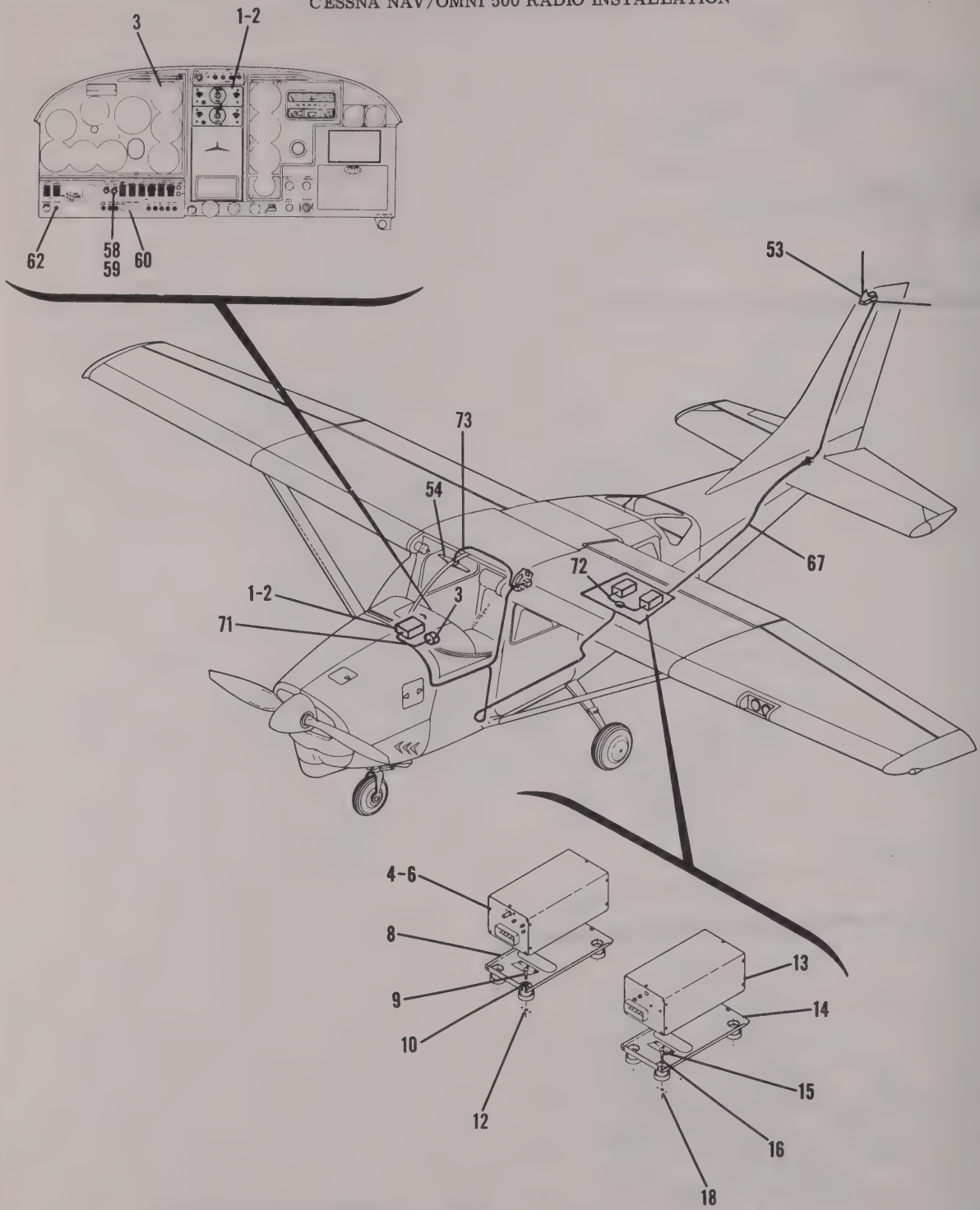


## 210 SERIAL 21058111 & ON

Figure 2-7. Cessna Nav/Omni 500 Radio Installation - Sheet 4

CESSNA NAV/OMNI 500 RADIO INSTALLATION

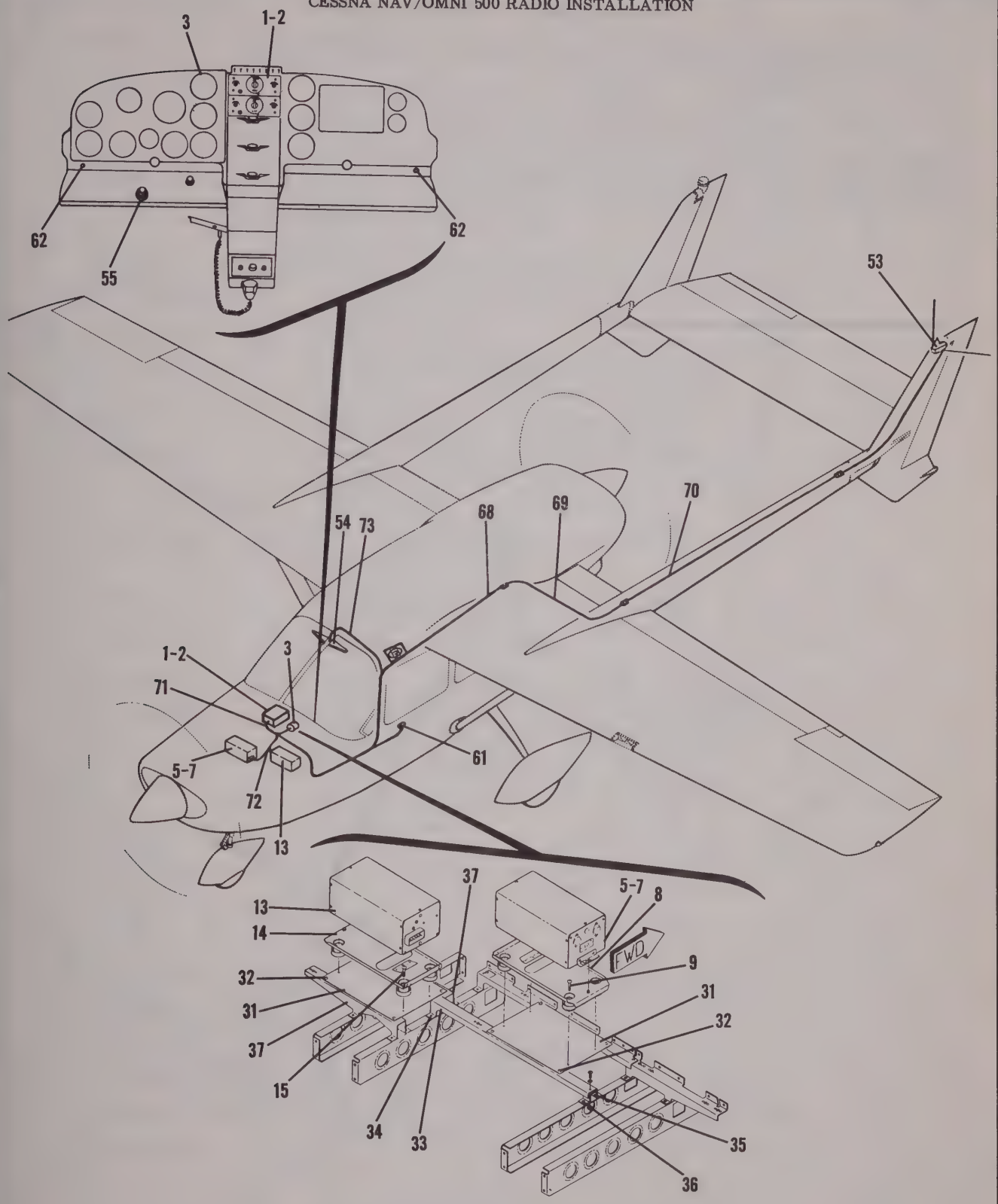


## 336 SERIAL 336-0001 & ON

Figure 2-7. Cessna Nav/Omni 500 Radio Installation - Sheet 5

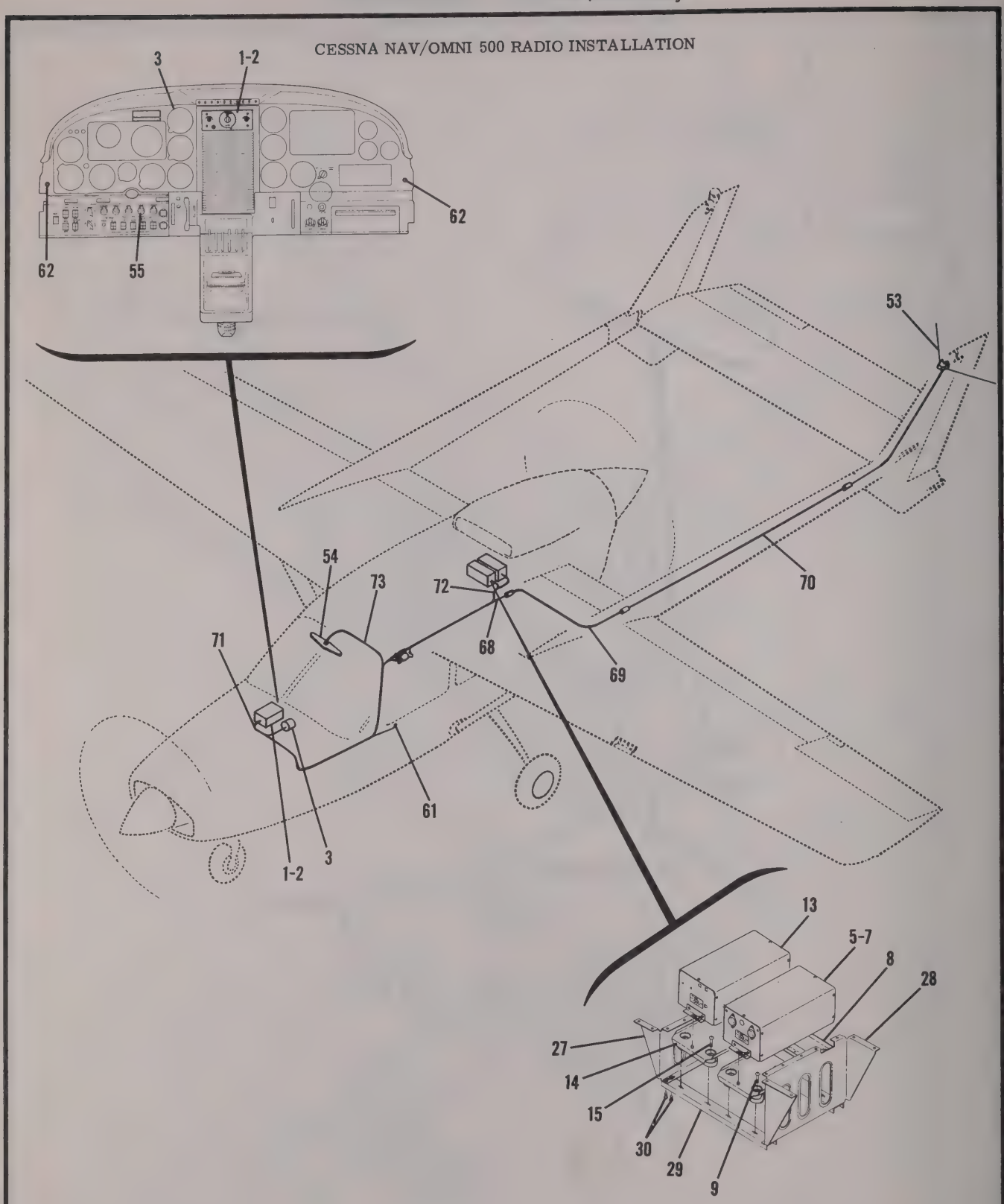


## 337 SERIAL 337-0001 & ON

Figure 2-7. Cessna Nav/Omni 500 Radio Installation - Sheet 6

| FIGURE AND INDEX NO. | PART NUMBER | DESCRIPTION<br>1 2 3 4 5 6 7 | UNITS PER ASSY | USABLE ON CODE |
|---|---|---|---|---|
| 2-7- | | CESSNA NAV/OMNI 500 RADIO INSTALLATION ---------- | N/P | |
| - 1 | 28310-1000 | RECEIVER - TYPE R-319A - 14 & 28 VOLT - THRU 1964 ONLY ---- WHEN EXHAUSTED USED 34110-1000 | A/R | |
| | 27591 | MOUNTING - TYPE 303A - SINGLE NON TSO USED ONLY ---- WITH 28310-1000 RECEIVER | A/R | |
| | 27594 | MOUNTING - TYPE M-304A - DUAL NON TSO USED ONLY ---- WITH 28310-1000 RECEIVER | A/R | |
| | 26780 | MOUNTING - TYPE M-302A - SINGLE TSO-----USED ONLY --------- WITH 28310-1000 RECEIVER | A/R | |
| | 26790 | MOUNTING - TYPE M-302A - DUAL TSO USED ONLY --------- WITH 28310-1000 RECEIVER | A/R | |
| | | ATTACHING PARTS | | |
| | S1021Z6-8 | SCREW - 6 REQD FOR DUAL MOUNTS-----ALL EXCEPT 336 --------- | 4 | |
| | NAS446-2-3 | NUT - 6 REQD FOR DUAL MOUNTS ALL EXCEPT 336 --------- | 4 | |
| | AN515-6R8 | SCREW - 6 REQD FOR DUAL MOUNTS-----336 ONLY ---------- | 4 | |
| | | ---*--- | | |
| - 2 | 33210-1000 | RECEIVER - TYPE R-319G-10 - 14 & 28 VOLT - 1965 ONLY ---- AND ALL SPARES WHEN 28310-1000 IS EXHAUSTED | A/R | |
| - 2A | 34110-1000 | RECEIVER - WITH DME SWITCHING - TYPE R-319G-1 - --------- 14 & 28 VOLT - 1966 & ON AND ALL SPARES WHEN 33210-100 IS EXHAUSTED | 1 | |
| | 33370 | MOUNTING - TYPE M-301G - SINGLE TSO-----USED ONLY WITH ---- 33210-1000 OR 34110-1000 RECEIVER | A/R | |
| | 0770722-1 | MOUNTING - DUAL TSO USED ONLY WITH 33210-1000 --------- OR 34110-1000 RECEIVER | A/R | |
| | 0770723-1 | MOUNTING - 3 OR 4 TSO RADIOS USED ONLY WITH --------- 33210-1000 OR 34110-1000 RECEIVER | A/R | |
| | | ATTACHING PARTS | | |
| | AN515-6R6 | SCREW - 6 REQD FOR DUAL MOUNTING & 8 REQD ON 3 OR 4 ---- STACK MOUNTING | 4 | |
| | | ---*--- | | |
| - 3 | 27510 | INDICATOR - TYPE IN-319A-1---------- | 1 | |
| | | ATTACHING PARTS | | |
| | AN507B632R12 | SCREW ---------- | 3 | |
| | NAS446-2-3 | NUT ---------- | 3 | |
| | | ---*--- | | |
| - 4 | 28300-0014 | * DYNAVERTER - TYPE DV-319A - 14 VOLT-----THRU 1963 ONLY ---- - WHEN EXHAUSTED USE 31360-0014 FOR ALL SPARES | A/R | |
| - 5 | 28300-0028 | * DYNAVERTER - TYPE DV-319A - 14 VOLT-----THRU 1963 --------- ONLY - WHEN EXHAUSTED USE 31360-0028 FOR ALL SPARES | A/R | |
| - 6 | 31360-0014 | * DYNAVERTER - TYPE DV-319B - 14 VOLT-----1964 & ON AND ---- ALL SPARES WHEN 28300-0014 IS EXHAUSTED | A/R | |
| - 7 | 31360-0028 | * DYNAVERTER - TYPE DV-319B - 14 VOLT-----1964 & ON AND ---- ALL SPARES WHEN 28300-0028 IS EXHAUSTED | A/R | |
| - 8 | 24900 | MOUNTING - TYPE M-335A ---------- | 1 | |
| | | ATTACHING PARTS | | |
| - 9 | AN515-8R16 | SCREW ---------- | 4 | |
| - 10 | AN936A8 | WASHER---------- | 4 | |
| - 11 | MS20365-832C | NUT ALL MODELS EXCEPT 182, 210, T210 & 337 --------- | 4 | |
| - 12 | A8K75 | RIVNUT-----182 & 210, T210 ONLY ---------- | 4 | |
| | | ---*--- | | |
| - 13 | 24660 | * CONVERTER - TYPE B-317A ---------- | 1 | |
| - 14 | 24900 | MOUNTING - TYPE M-335A ---------- | 1 | |
| | | ATTACHING PARTS | | |
| - 15 | AN515-8R16 | SCREW ---------- | 4 | |
| - 16 | AN936A8 | WASHER---------- | 4 | |
| - 17 | MS20365-832C | NUT ALL MODELS EXCEPT 182, 210, T210 & 337 --------- | 4 | |
| - 18 | A8K75 | RIVNUT-----182, 210 & T210 ONLY ---------- | 4 | |
| | | ---*--- | | |
| - 19 | 1270627-85 | SIDE ANGLE ASSY - LH SIDE - STD EQUIP 205, --------- 206, P206, U206, TP206 & TU206 | REF | |
| - 20 | 1270627-86 | SIDE ANGLE ASSY - RH SIDE - STD EQUIP 205, 206, ---- P206, U206, TP206 & TU206 | REF | |
| - 21 | 1270627-69 | ATTACH ANGLE 205, 206, P206, U206, TP206 & TU206 ---- | 2 | |
| | | ATTACHING PARTS | | |
| - 22 | AN520-10R6 | SCREW ---------- | 4 | |
| | | ---*--- | | |

CONTINUED ON NEXT PAGE

| FIGURE AND INDEX NO. | PART NUMBER | DESCRIPTION<br>1 2 3 4 5 6 7 | UNITS PER ASSY | USABLE ON CODE |
|---|---|---|---|---|
| 2-7- 23 | 1270627-29 | SIDE ANGLE ASSY - LH SIDE - OPT LOWER LOCATION 205,---- 206, P206, U206, TP206 & TU206 | 1 | |
| - 24 | 1270627-30 | SIDE ANGLE ASSY - RH SIDE - OPT LOWER LOCATION 205,---- 206, P206, U206, TP206 & TU206 | 1 | |
| - 25 | 1270627-69 | ATTACH ANGLE 205, 206, P206, U206, TP206 & TU206 ---- | 2 | |
| | | ATTACHING PARTS | | |
| - 26 | AN520-10R6 | SCREW ---*--- | 4 | |
| - 27 | 1512602-4 | HANGER ASSY - AFT 337 ONLY---------- | 1 | |
| - 28 | 1512602-2 | HANGER ASSY - FWD 337 ONLY---------- | 1 | |
| - 29 | 1512602-6 | CHANNEL ASSY 337 ONLY ---------- | 2 | |
| | | ATTACHING PARTS | | |
| - 30 | AN515-8R8 | SCREW ---*--- | 8 | |
| - 31 | 1470098-1 | PLATE ASSY 336 ONLY ---------- | 2 | |
| | | ATTACHING PARTS | | |
| - 32 | AN520-10R10 | SCREW ---*--- | 4 | |
| - 33 | 1470056-13 | SUPPORT ASSY 336 ONLY ---------- | 1 | |
| | | ATTACHING PARTS | | |
| - 34 | AN515-8R8 | SCREW ---------- | 3 | |
| | AN960-8 | WASHER---------- | 3 | |
| | MS20365-832C | NUT ---------- | 3 | |
| | | ---*--- | | |
| - 35 | 1470113-7 | SUPPORT 336 ONLY ---------- | 1 | |
| | | ATTACHING PARTS | | |
| - 36 | AN515-8R8 | SCREW ---------- | 3 | |
| | AN960-8 | WASHER---------- | 3 | |
| | MS20365-832C | NUT ---------- | 3 | |
| | | ---*--- | | |
| - 37 | 1470056-9 | SUPPORT ASSY 336 ONLY ---------- | 2 | |
| | | ATTACHING | | |
| | AN515-8R8 | SCREW ---------- | 8 | |
| | AN960-8 | WASHER---------- | 8 | |
| | MS20365-832C | NUT ---------- | 8 | |
| | | ---*--- | | |
| - 38 | 1270645-1 | PLATE - RADIO MOUNTING 180 & 185 ONLY ---------- | 2 | |
| | | ATTACHING PARTS | | |
| - 39 | AN515-8R8 | SCREW ---------- | 8 | |
| - 40 | MS20365-832C | NUT ---------- | 8 | |
| | | ---*--- | | |
| - 41 | 0770067-10 | CHANNEL - RADIO MOUNTING 180 & 185 ONLY ---------- | 2 | |
| | | ATTACHING PARTS | | |
| - 42 | AN515-8R8 | SCREW ---------- | 8 | |
| - 43 | MS20365-832C | NUT ---------- | 8 | |
| | | ---*--- | | |
| - 44 | 0770713-1 | ANGLE - RADIO RACK EQUIPMENT 180 & 185 ONLY ---------- | 2 | |
| | | ATTACHING PARTS | | |
| - 45 | AN515-8R10 | SCREW ---------- | 8 | |
| - 46 | S355 | SPACER---------- | 8 | |
| - 47 | MS20365-832C | NUT ---------- | 8 | |
| | | ---*--- | | |
| - 48 | 0770071-1 | ANGLE - RADIO RACK EQUIPMENT 180 & 185 ONLY ---------- | 1 | |
| - 49 | 0770070-1 | ANGLE - RADIO RACK EQUIPMENT 180 & 185 ONLY ---------- | 1 | |
| - 50 | 0770069-1 | BRACKET - RADIO EQUIPMENT RACK-----180 & 185 ONLY ---------- | 1 | |
| | | ATTACHING PARTS | | |
| - 51 | AN515-8R8 | SCREW ---------- | 2 | |
| - 52 | MS20365-832C | NUT ---------- | 2 | |
| | | ---*--- | | |
| - 53 | | OMNI ANTENNA INSTALLATION ----SEE FIGURE 8-2 ---------- | 1 | |

CONTINUED ON NEXT PAGE

| FIGURE AND INDEX NO. | PART NUMBER | DESCRIPTION<br>1 2 3 4 5 6 7 | UNITS PER ASSY | USABLE ON CODE |
|---|---|---|---|---|
| 2-7- 54 | | GLIDE SLOPE ANTENNA INSTALLATION SEE FIGURE 8-3 ---- | 1 | |
| | | RADIO COOLING INSTALLATION---- SEE FIGURE 10-1 --------- | A/R | |
| - 54 | | RADIO NOISE FILTERS SEE FIGURE 10-5 ---------- | A/R | |
| - 55 | | DROPPING RESISTOR - FLT INST & RADIO DIAL LT SEE ---- FIGURE 10-2 336 & 337 ONLY | A/R | |
| | | TRANSMITTER SELECTOR SWITCH INSTALLATION-----SEE --------- FIGURE 9-1 | 1 | |
| - 56 | 0413126-5 | RHEOSTAT 180 & 185 ONLY ---------- | 1 | |
| - 57 | S1390-3 | KNOB ASSY 180 & 185 ONLY ---------- | 1 | |
| - 58 | R-12 1/2-75-RS34 | RHEOSTAT 182, 205, 206, P206, U206, TP206, TU206 & ---- T210 ONLY | | |
| - 59 | S1163-2 | KNOB-RHEOSTAT 182, 205, 206, P206, U206, TP206, TU206, 210 & T210 ONLY | 1 | |
| - 60 | S1360-10 | CIRCUIT BREAKER ALL MODELS EXCEPT 336 & 337 --------- | 1 | |
| - 61 | S1360-5 | CIRCUIT BREAKER 336 & 337 ONLY ---------- | 1 | |
| - 62 | S1103-1 | PHONE JACK ---------- | 1 | |
| | 0770039-1 | HEADSET ---------- | 1 | |
| - 63 | 0770650-1 | AUX RADIO SHELF 182 ONLY ---------- | 1 | |
| - 64 | 0770651-1 | SUPPORT - AUX RADIO SHELF ----182 ONLY ---------- | 1 | |
| - 65 | 0770651-2 | SUPPORT - AUX RADIO SHELF ----182 ONLY ---------- | 1 | |
| - 66 | 0770651-3 | SUPPORT - AUX RADIO SHELF ----182 ONLY ---------- | 1 | |
| - 67 | | CABLE ASSY - RCVR TO BALUN STUB ALL MODELS EXCEPT ---- 336 & 337 ONLY | N/P | |
| | RG-58A/U | COAXIAL CABLE - BULK ITEM ---------- | A/R | |
| | UG-88C/U | PLUG-COAXIAL - BALUN STUB END ---------- | 1 | |
| | 8019-1 TNC | PLUG-COAXIAL - RT ANGLE - RCVR END ---------- | 1 | |
| - 68 | | CABLE ASSY - RCVR TO WING ROOT JUNCTION 336 --------- & 337 ONLY | N/P | |
| | RG-58A/U | COAXIAL CABLE - BULK ITEM ---------- | A/R | |
| | UG-88C/U | PLUG-COAXIAL - WING ROOT END---------- | 1 | |
| | 8019-1 TNC | PLUG-COAXIAL - RT ANGLE - RCVR END ---------- | 1 | |
| - 69 | | CABLE ASSY-WING ROOT TO BOOM CONN STD EQUIPMENT 336---- & 337 ONLY | N/P | |
| | RG-58A/U | COAXIAL CABLE - BULK ITEM ---------- | A/R | |
| | UG-89/U | JACK-COAXIAL - WING ROOT END---------- | 1 | |
| | UG-88C/U | PLUG-COAXIAL - BOOM CONNECTION END ---------- | 1 | |
| - 70 | | CABLE ASSY - BOOM CONNECTOR TO BALUN STUB - STD --------- EQUIPMENT ON 337 336 & 337 ONLY | N/P | |
| | RG-58A/U | COAXIAL CABLE - BULK ITEM ---------- | A/R | |
| | UG-89/U | JACK-COAXIAL ---------- | 1 | |
| | UG-88C/U | PLUG-COAXIAL ---------- | 1 | |
| - 71 | | CABLE ASSY - INTER CONNECTING ---------- | N/P | |
| | 28822 | PLUG - 20 PIN - MATES RECEIVER & DYNAVERTER---------- | 2 | |
| | 27825 | PLUG - 15 PIN - MATES CONVERTER ---------- | 1 | |
| | AN3106A20-27S | PLUG - MATES INDICATOR ---------- | 1 | |
| | AN3057-12 | ADAPTER ---------- | 1 | |
| - 72 | | CABLE ASSY - RCVR TO DYNAVERTER ---------- | N/P | |
| | RG-58A/U | COAXIAL CABLE - BULK ITEM ---------- | A/R | |
| | UG-88C/U | PLUG-COAXIAL - MATES DYNAVERTER ---------- | 1 | |
| | 5134-1 DM | PLUG-COAXIAL - MATES RCVR ---------- | 1 | |
| - 73 | | CABLE ASSY - RCVR TO GS ANTENNA ---------- | N/P | |
| | RG-58A/U | COAXIAL CABLE-BULK ITEM ---------- | A/R | |
| | UG-88C/U | PLUG - COAXIAL-----336 & 337 ONLY---------- | 1 | |
| | S1267-1-4 | TERMINAL ---------- | 2 | |
| | UG-913/U | PLUG-RT ANGLE ALL MODELS EXCEPT 336 & 337 --------- | 1 | |
| | 8002-1 TNC | TEE CONNECTOR - COAXIAL USED TO CONNECT DUAL --------- OMNI RCVRS TO SINGLE ANT - ATTACH TO NO. 1 RCVR AND USE CABLE BELOW TO CONNECT RCVR NO. 2. | A/R | |
| | | CABLE ASSY - ADAPTER TO NO. 2 RCVR ---------- | N/P | |
| | RG-58A/U | COAXIAL CABLE - BULK ITEM - 34.5 INCHES LONG --------- | A/R | |
| | 8001-1 TNC | PLUG-COAXIAL - TEE END ---------- | 1 | |
| | 8019-1 TNC | PLUG-COAXIAL - RT ANGLE - RCVR NO. 2 END ---------- | 1 | |
| | 8160-1 TNC | ADAPTER - ATTACHES NO. 2 RCVR CABLE TO TEE CONN --------- | 1 | |

* NOTE WHEN REPLACING TYPE DV-319A DYNAVERTER WITH A DV-319B, REFER TO APPENDIX I FOR REQUIRED WIRE HARNESS CHANGES

* ITEMS MARKED WITH ASTERISK SUPPLIED WHEN COMPLETE RADIO IS PURCHASED

CESSNA 1 1/2 NAV/COM 300 OR 300R RADIO INSTALLATION

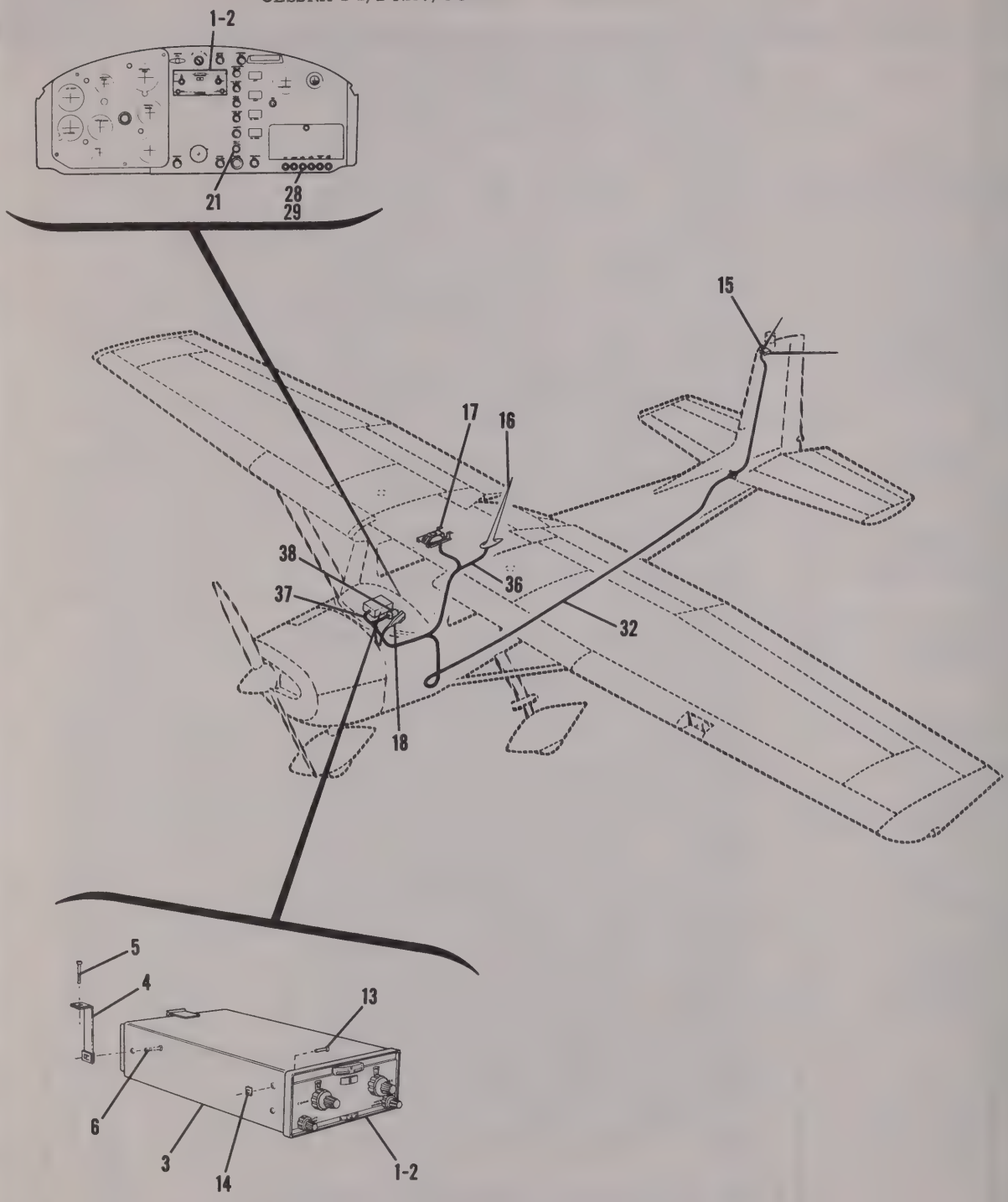


## 150 SERIAL 15060088 & ON

Figure 2-8. Cessna 1 1/2 Nav/Com 300 or 300R Radio Installation (Type 514A, 516A, 514R or 515R) - Sheet 1

CESSNA 1 1/2 NAV/COM 300 OR 300R RADIO INSTALLATION

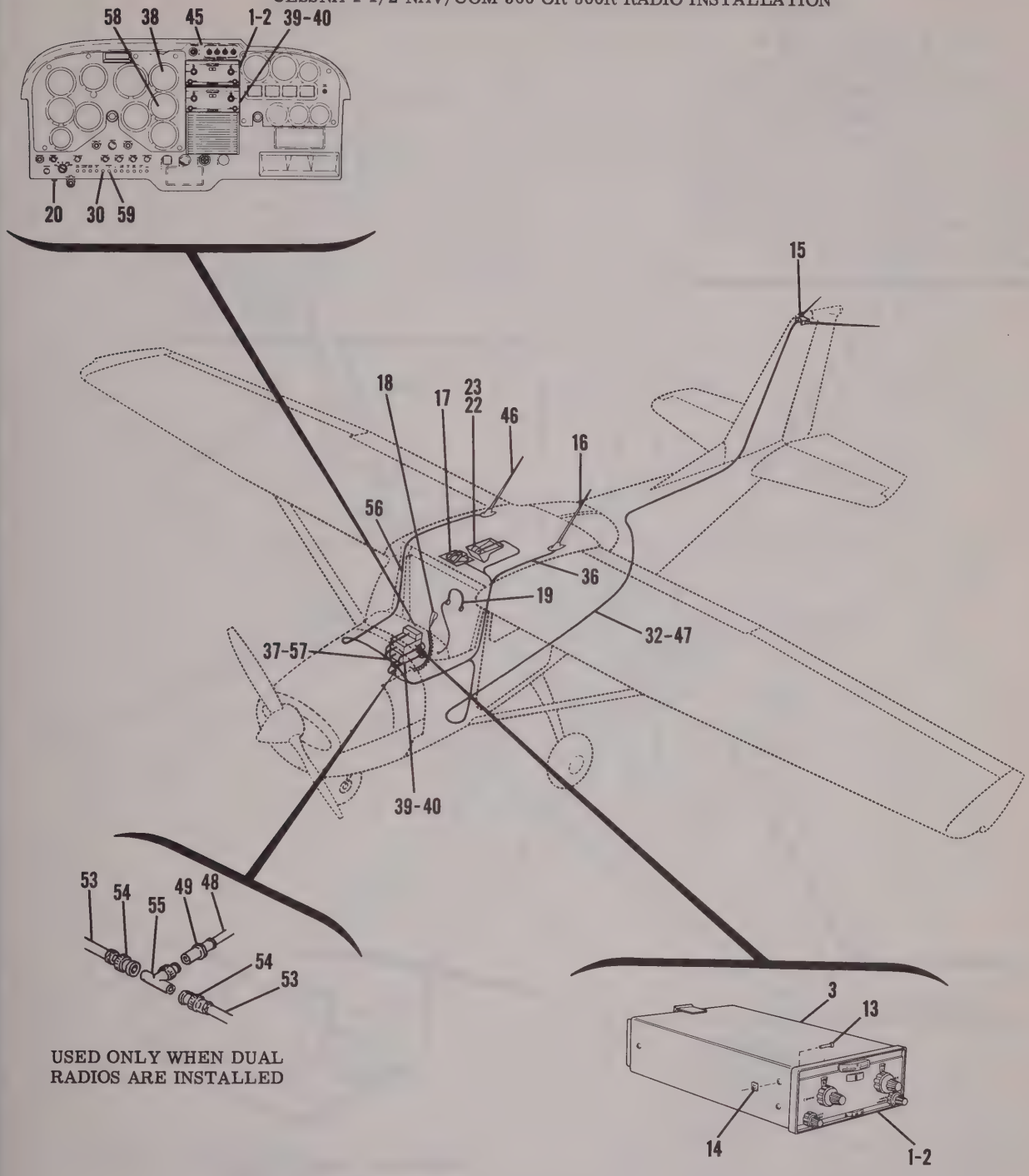


USED ONLY WHEN DUAL RADIOS ARE INSTALLED

## 172 SERIAL 17250573 & ON

Figure 2-8. Cessna 1 1/2 Nav/Com 300 or 300R Radio Installation (Type 514A, 516A, 514R or 515R) - Sheet 2

CESSNA 1 1/2 NAV/COM 300 OR 300R RADIO INSTALLATION

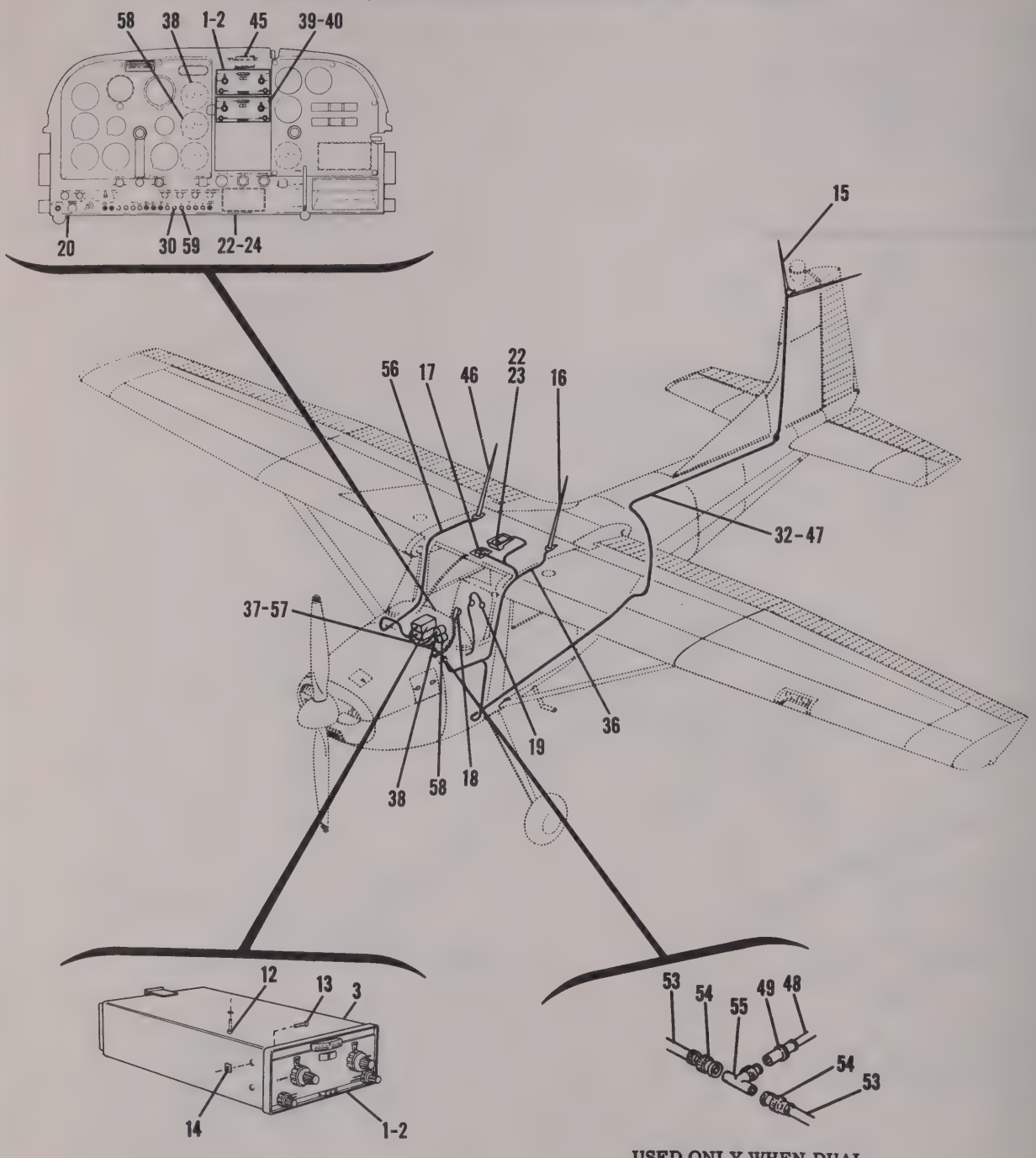


## 180 SERIAL 18051313 & ON
## 185 SERIAL 185-0654 & ON

Figure 2-8. Cessna 1 1/2 Nav/Com 300 or 300R Radio Installation (Type 514A, 516A, 514R or 515R) - Sheet 3

CESSNA 1 1/2 NAV/COM 300 OR 300R RADIO INSTALLATION

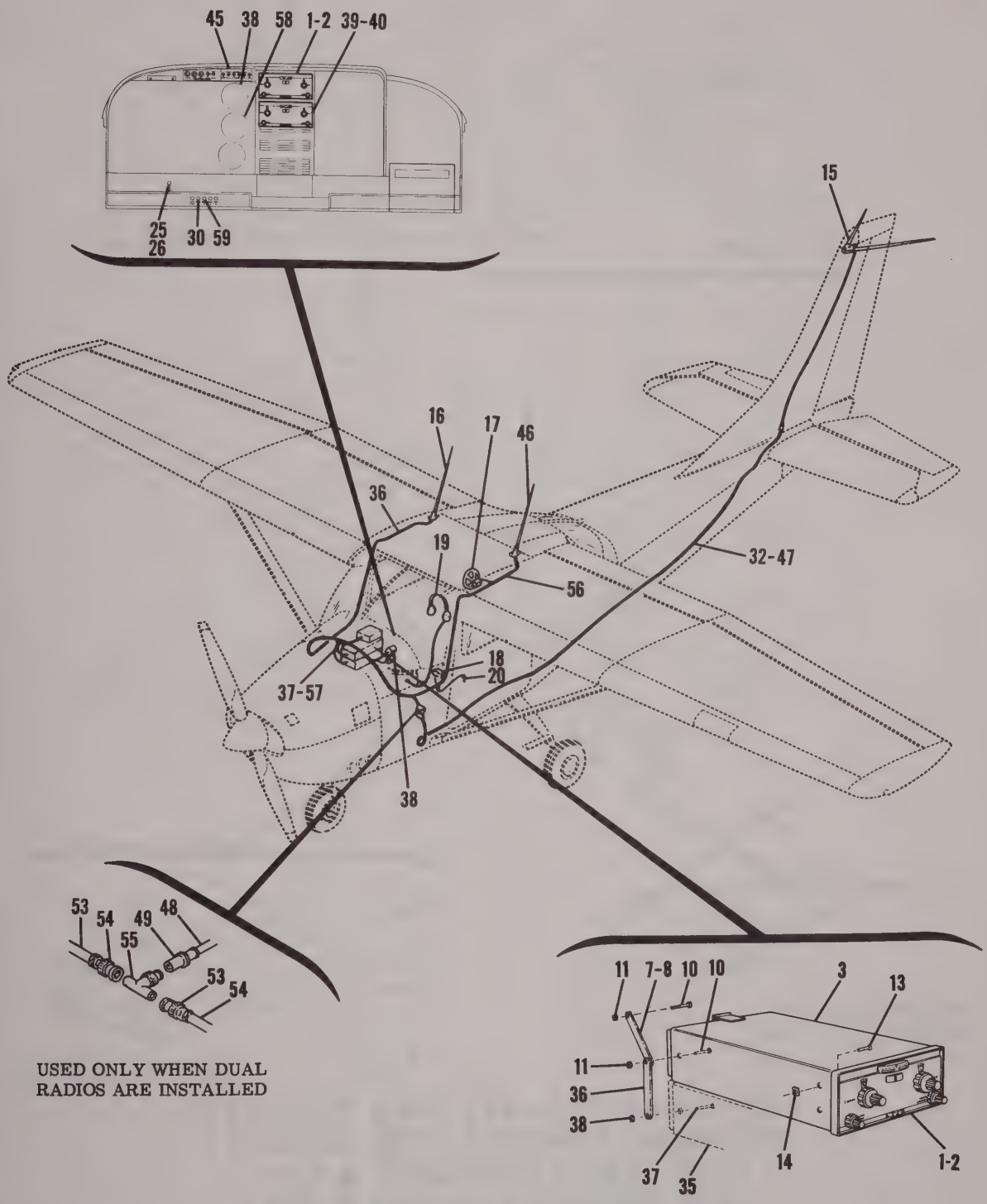


182 SERIAL 18255059 & ON

Figure 2-8. Cessna 1 1/2 Nav/Com 300 or 300R Radio Installation (Type 514A, 516A, 514R or 515R) - Sheet 4

CESSNA 1 1/2 NAV/COM 300 OR 300R RADIO INSTALLATION

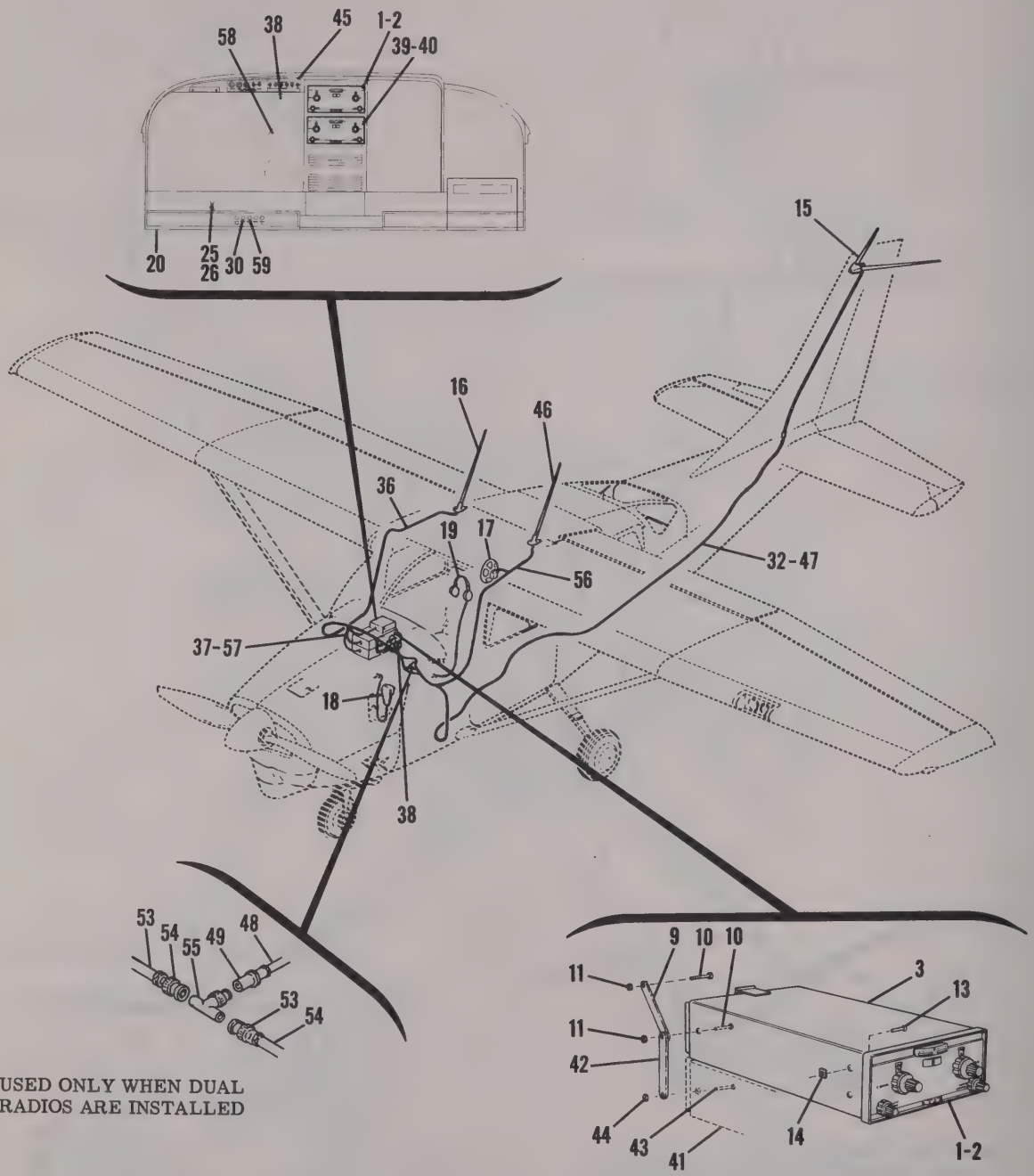


**205 SERIAL 205-0481 THRU 205-0577**
**206 SERIAL 206-0001 THRU 206-0275**
**P206 SERIAL P206-0001 & ON**
**U206 SERIAL U206-0001 & ON**
**TP206 SERIAL TP206-0161 & ON**
**TU206 SERIAL TU206-0438 & ON**

Figure 2-8. Cessna 1 1/2 Nav/Com 300 or 300R Radio Installation (Type 514A, 516A, 514R or 515R) - Sheet 5

CESSNA 1 1/2 NAV/COM 300 OR 300R RADIO INSTALLATION

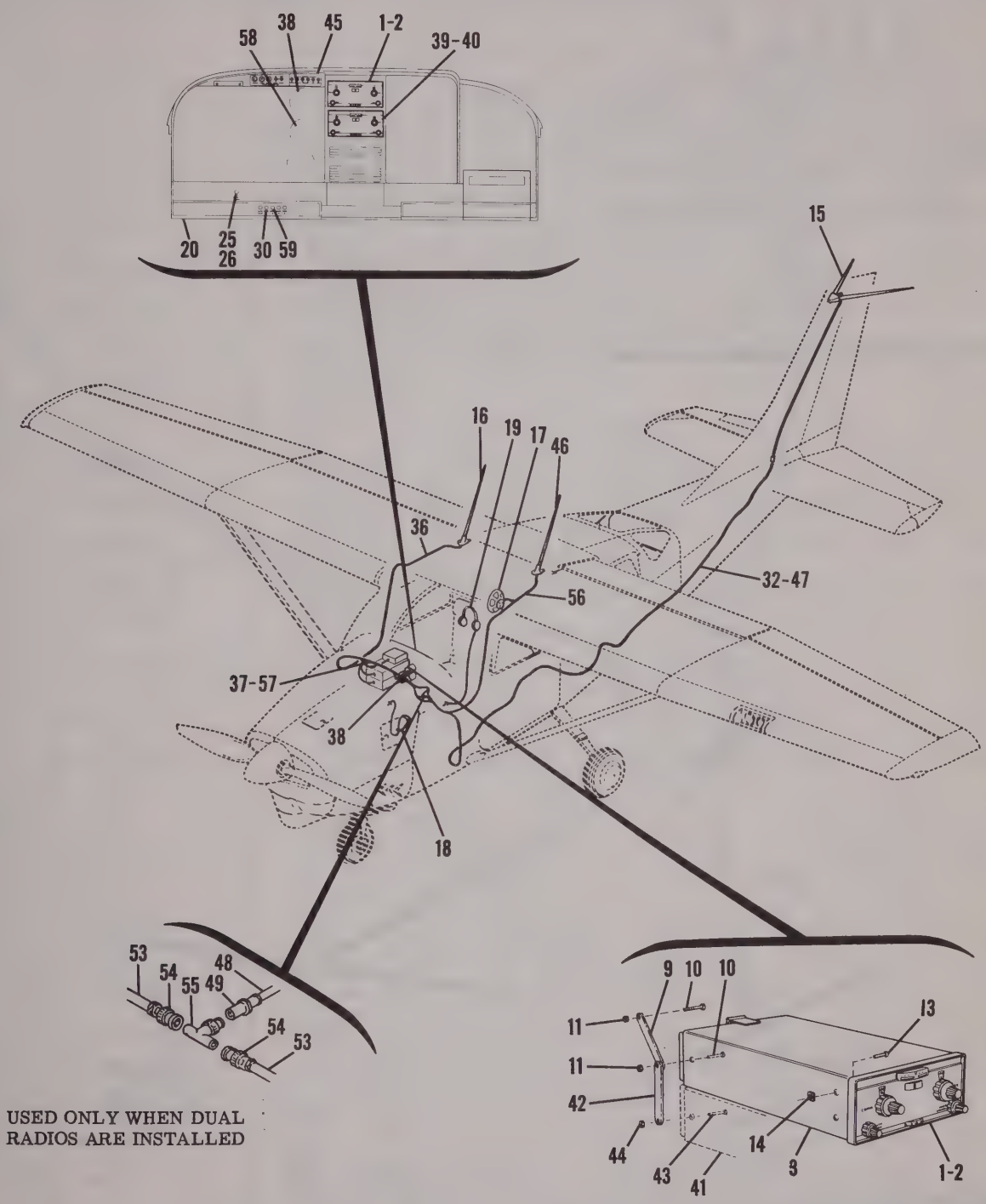


USED ONLY WHEN DUAL RADIOS ARE INSTALLED

## 210 SERIAL 21058221 & ON
## T210 SERIAL T210-0001 & ON

Figure 2-8. Cessna 1 1/2 Nav/Com 300 or 300R Radio Installation (Type 514A, 516A, 514R or 515R) - Sheet 6

CESSNA 1 1/2 NAV/COM 300 OR 300R RADIO INSTALLATION

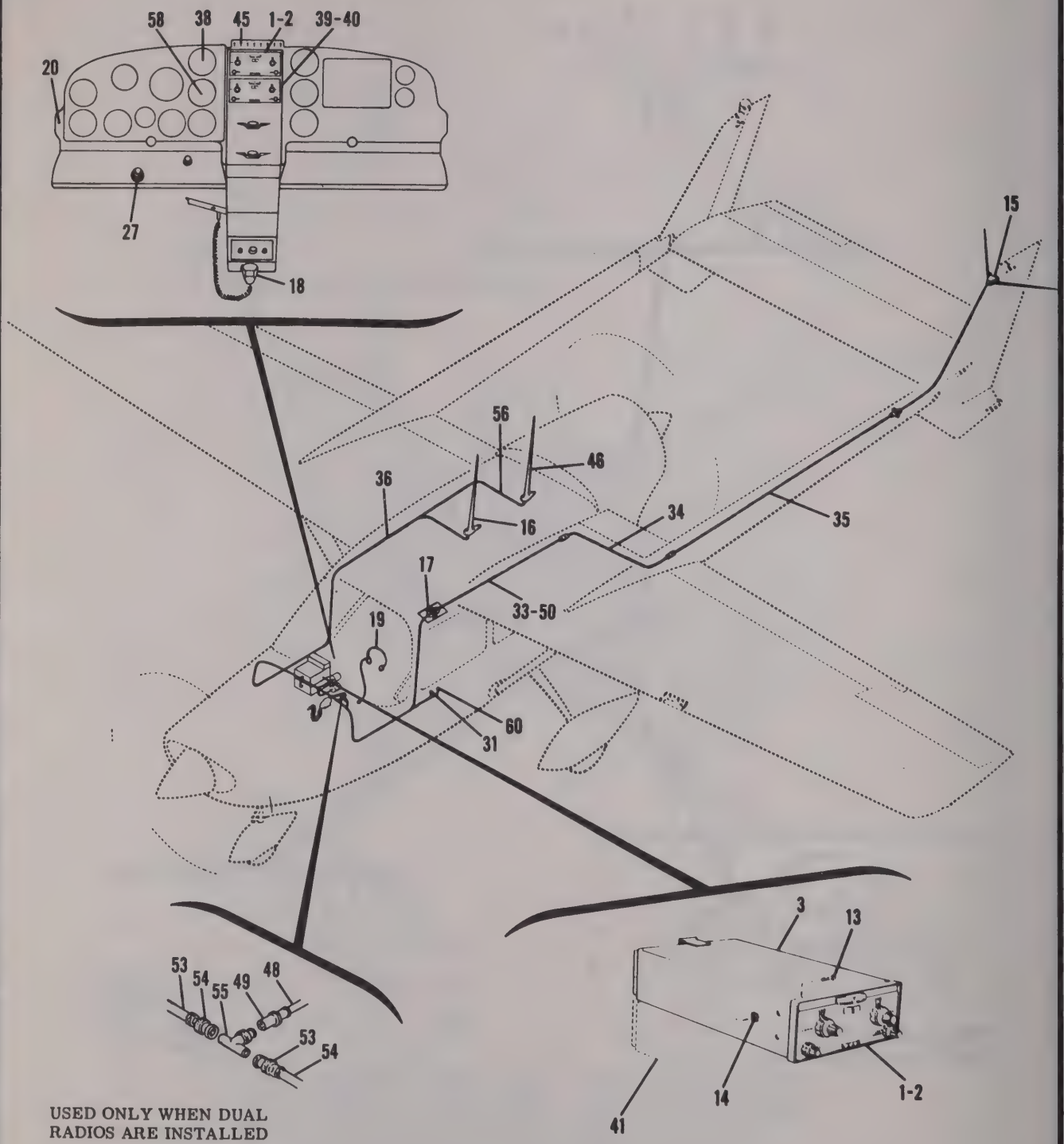


USED ONLY WHEN DUAL RADIOS ARE INSTALLED

**337 SERIAL 337-0001 THRU 337-0239**
**336 SERIAL 336-0001 THRU 336-0195**

Figure 2-8. Cessna 1 1/2 Nav/Com 300 or 300R Radio Installation (Type 514A, 516A, 514R or 515R) - Sheet 7

| FIGURE AND INDEX NO. | PART NUMBER | DESCRIPTION<br>1 2 3 4 5 6 7 | UNITS PER ASSY | USABLE ON CODE |
|---|---|---|---|---|
| 2-8- | | CESSNA 1 1/2 NAV/COM 300 - TYPE RT-514A - OR 1 1/2 NAV/COM 300R - TYPE RT-514R-11 - RADIO INSTALLATION | N/P | |
| - 1 | | CESSNA 1 1/2 NAV/COM 300 TRANSCEIVERS ---------- | | |
| | 30410-1014 | TRANSCEIVER - 100 CHANNEL - 14 VOLT - TYPE 514A-10 - ---- THRU 1964 ONLY - WHEN EXHAUSTED USE 34710-1014 | A/R | |
| | 30410-1028 | TRANSCEIVER - 100 CHANNEL - 28 VOLT - TYPE 514A-10 - ---- THRU 1964 ONLY - WHEN EXHAUSTED USE 30410-1228 | A/R | |
| | 30410-1214 | TRANSCEIVER - 100 CHANNEL - 14 VOLT - TYPE 514A-12 - ---- THRU 1965 ONLY - WHEN EXHAUSTED USE 34710-1014 | A/R | |
| | 30410-1228 | TRANSCEIVER - 100 CHANNEL - 28 VOLT - TYPE RT-514A-12 ----- THRU 1965 ONLY - WHEN EXHAUSTED - NOT AVAILABLE | A/R | |
| | 30410-1114 | TRANSCEIVER - 360 CHANNEL - 14 VOLT - TYPE RT-514A-11 ----- THRU 1964 ONLY - WHEN EXHAUSTED USE 30410-1314 | A/R | |
| | 30410-1128 | TRANSCEIVER - 360 CHANNEL - 28 VOLT - TYPE RT-514A-11 ----- THRU 1964 ONLY - WHEN EXHAUSTED USE 30410-1328 | A/R | |
| | 30410-1314 | TRANSCEIVER - 360 CHANNEL - 14 VOLT - TYPE RT-514A-13 ----- THRU 1965 ONLY - WHEN EXHAUSTED - NOT AVAILABLE | A/R | |
| | 30410-1328 | TRANSCEIVER - 360 CHANNEL - 28 VOLT - TYPE RT-514A-13 ----- THRU 1965 ONLY - WHEN EXHAUSTED - NOT AVAILABLE | A/R | |
| | 34710-1014 | TRANSCEIVER - 90 CHANNEL - 14 VOLT - TYPE RT-516A - ---- 1966 & ON | A/R | |
| - 2 | | CESSNA 1 1/2 NAV/COM 300R TRANSCEIVERS - REMOTE INDICATOR | | |
| | 32580-1314 | TRANSCEIVER - 360 CHANNEL - 14 VOLT - TYPE RT-514R-13 ----- THRU 1964 ONLY - WHEN EXHAUSTED USE 34640-1114 | A/R | |
| | 32580-1328 | TRANSCEIVER - 360 CHANNEL - 28 VOLT - TYPE RT-514R-13 ----- THRU 1964 ONLY - WHEN EXHAUSTED USE 34640-1128 | A/R | |
| | 32580-1114 | TRANSCEIVER - 360 CHANNEL - 14 VOLT - TYPE RT-514R-11 ----- THRU 1965 ONLY - WHEN EXHAUSTED USE 34640-1114 | A/R | |
| | 32580-1128 | TRANSCEIVER - 360 CHANNEL - 28 VOLT - TYPE RT-514R-11 ----- THRU 1965 ONLY - WHEN EXHAUSTED USE 34640-1128 | A/R | |
| | 32580-1614 | TRANSCEIVER - 360 CHANNEL - 14 VOLT - TYPE RT-514R-16 ----- THRU 1965 ONLY - WHEN EXHAUSTED - NOT AVAILABLE FOR EXPORT ONLY | A/R | |
| | 32580-1628 | TRANSCEIVER - 360 CHANNEL - 28 VOLT - TYPE RT-514R-16 ----- THRU 1965 ONLY - WHEN EXHAUSTED - NOT AVAILABLE FOR EXPORT ONLY | A/R | |
| | 34640-1114 | TRANSCEIVER - 360 CHANNEL - 14 VOLT - TYPE RT-515R - ---- 1966 & ON | A/R | |
| | 34640-1128 | TRANSCEIVER - 360 CHANNEL - 28 VOLT - TYPE RT-515R - ---- 1966 & ON | A/R | |
| | | ATTACHING PARTS | | |
| - 3 | 30420 | MOUNTING - FOR USE ONLY WITH 1 1/2 NAV/COM 300 - TYPE ---- RT-514A - TRANSCEIVERS | A/R | |
| | 32570 | MOUNTING - FOR USE ONLY WITH 1 1/2 NAV/COM 300R - TYPE ---- RT-514R - TRANSCEIVERS | A/R | |
| - 4 | 0413403-1 | SUPPORT ASSY 150 ONLY ---------- | 1 | |
| - 5 | S1021Z8-8 | SCREW - ATTACHES SUPPORT ASSY 150 ONLY ---------- | 1 | |
| - 6 | S1022Z8-8 | SCREW - ATTACHES SUPPORT ASSY 150 ONLY ---------- | 1 | |
| - 7 | 1270465-2 | SUPPORT STRAP THRU 1964 182 MODES ONLY ---------- | 2 | |
| - 8 | 1270465-4 | SUPPORT STRAP 1965 & ON 182 MODES ONLY ---------- | 2 | |
| - 9 | 1270465-1 | SUPPORT STRAP 205, 206, P206, U206, TP206, TU206, ---- 210 & T210 ONLY | 2 | |
| - 10 | AN507-632R6 | SCREW - ATTACHES SUPPORT STRAP-----182, 205, 206, P206,---- TP206, U206, TU206, 210 & T210 ONLY | 4 | |
| - 11 | MS20365-632C | NUT - ATTACHES SUPPORT STRAP 182, 205, 206, P206, ---- TP206, U206, TU206, 210 & T210 ONLY | 4 | |
| - 12 | S1021Z6-8 | SCREW THRU 1964 180 & 185 MODELS ONLY ---------- | 1 | |
| - 13 | S1021Z6-8 | SCREW ---------- | 4 | |
| - 14 | NAS446-2-3 | NUT ---------- | 4 | |
| | | ---*--- | | |
| - 15 | | OMNI ANTENNA INSTALLATION ----SEE FIGURE 8-2 ---------- | 1 | |
| - 16 | | UHF ANTENNA INSTALLTION SEE FIGURE 8-1 ---------- | 1 | |
| | | RADIO COOLING INSTALLATION---- SEE FIGURE 10-1 --------- | 1 | |
| - 17 | | SPEAKER INSTALLATION SEE FIGURE 9-3 ---------- | 1 | |
| - 18 | | MICROPHONE INSTALLATION SEE FIGURE 9-4 ---------- | 1 | |
| - 19 | | HEADSET INSTALLATION SEE FIGURE 4-5 ---------- | 1 | |

CONTINUED ON NEXT PAGE

| FIGURE AND INDEX NO. | PART NUMBER | DESCRIPTION<br>1 2 3 4 5 6 7 | UNITS PER ASSY | USABLE ON CODE |
|---|---|---|---|---|
| 2-8- 20 | S1103-1 | PHONE JACK ALL MODELS EXCEPT 150 SEE FIGURE 9-5---- | 1 | |
| - 21 | 0413126-7 | RHEOSTAT ASSY 150 ONLY---------- | 1 | |
| | 0413126-6 | RHEOSTAT 150 ONLY ---------- | 1 | |
| | 0413126-3 | KNOB-RHEOSTAT 150 ONLY ---------- | 1 | |
| - 22 | 0413126-5 | RHEOSTAT 172, 180 & 185 ---------- | 1 | |
| - 23 | S1390-3 | KNOB ASSY 1965 & ON 180 & 185 MODELS AND ALL 172 MODELS | 1 | |
| - 24 | 0413126-3 | KNOB-RHEOSTAT THRU 1964 180 & 185 MODELS ONLY --------- | 1 | |
| - 25 | R-12 1/2-75-RS34 | RHEOSTAT 182, 205, 206, P206, TP206, U206, TU206, ---- 210 & T210 ONLY | 1 | |
| - 26 | S1163-2 | KNOB 182, 205, 206, P206, TP206, U206, TU206, --------- 210 & T210 ONLY | 1 | |
| - 27 | | DROPPING RESISTOR - FLT INST & RADIO DIAL LT - OPT-----SEE FIGURE 10-2 | 1 | |
| - 28 | S1091-15 | FUSE 150 ONLY ---------- | 1 | |
| - 29 | S1090-4 | FUSEHOLDER ASSY 150 ONLY ---------- | 1 | |
| | S1090-9 | BODY ASSY-----150 ONLY ---------- | 1 | |
| | S1090-13 | CAP 150 ONLY ---------- | 1 | |
| - 30 | S1360-15 | CIRCUIT BREAKER 172, 180, 182, 185, 205, 206, P206,---- U206, TP206, TU206, 210 & T210 ONLY | 1 | |
| - 31 | S1360-8 | CIRCUIT BREAKER 336 ONLY ---------- | 1 | |
| - 32 | | CABLE ASSY - TRANSCEIVER TO BALUN STUB ---------- ALL MODELS EXCEPT 336 & 337 | N/P | |
| | RG-58A/U | COAXIAL CABLE - BULK ITEM ---------- | A/R | |
| | UG-291/U | JACK-COAXIAL - CONNECTS TO BALUN STUB CONNECTOR --------- 150 & 172 ONLY | 1 | |
| | UG-88C/U | PLUG-COAXIAL - CONNECTS TO BALUN STUB CONNECTOR --------- 180, 182, 185, 205, 206, P206, U206, TP206, TU206, 210 & T210 ONLY | 1 | |
| | UG-1050/U | CONNECTOR-COAXIAL - CONNECTS TO TRANSCEIVER---------- | 1 | |
| - 33 | | CABLE ASSY - TRANSCEIVER TO OMNI CABLE CONNECTION AT WING ROOT 336 & 337 ONLY | N/P | |
| | RG-58A/U | COAXIAL CABLE-BULK ITEM ---------- | A/R | |
| | UG-1050/U | CONNECTOR-COAXIAL - CONNECTS TO TRANSCEIVER---------- | 1 | |
| | UG-88C/U | PLUG-COAXIAL - CONNECTS TO WING ROOT CONNECTION --------- | 1 | |
| - 34 | | CABLE ASSY - WING ROOT TO BOOM CONNECTION - SUPPLIED ON---- AIRCRAFT AS STANDARD EQUIPMENT 336 & 337 ONLY | N/P | |
| | RG-58A/U | COAXIAL CABLE - BULK ITEM ---------- | A/R | |
| | UG-88C/U | PLUG-COAXIAL ---------- | 1 | |
| | UG-89/U | RECEPTACLE-COAXIAL ---------- | 1 | |
| - 35 | | CABLE ASSY - BOOM CONNECTION TO BALUN STUB ---------- 336 & 337 ONLY | N/P | |
| | RG-58A/U | COAXIAL CABLE - BULK ITEM ---------- | A/R | |
| | UG-89/U | RECEPTACLE-COAXIAL ---------- | 1 | |
| | UG-88C/U | PLUG-COAXIAL ---------- | 1 | |
| - 36 | | CABLE ASSY - TRANSCEIVER TO VHF ANTENNA ---------- | N/P | |
| | RG-58A/U | COAXIAL CABLE - BULK ITEM ---------- | A/R | |
| | UG-88C/U | PLUG-COAXIAL - ANT END 172, 180, 185, 336, & 337 ONLY | 1 | |
| | UG-913/U | PLUG-COAXIAL - RIGHT ANGLE - ANT END ---------- 182, 205, 206, P206, U206, TP206, TU206, 210 & T210 ONLY | 1 | |
| | UG-1051/U | CONNECTOR-COAXIAL - CONNECTS TO TRANSCEIVER---------- | 1 | |
| - 37 | | CABLE ASSY - MAIN CABLE ASSY ---------- | N/P | |
| | MRE18SG7H | CONNECTOR - TRANSCEIVER END 1 1/2 NAV/COM 300 --------- TYPE RT-514A & RT-516A ONLY | A/R | |
| | MRE26SG7H | CONNECTOR - TRANSCEIVER END 1 102 NAV/COM 300R ---- TYPE RT-514R & RT-515R ONLY | A/R | |
| | MS3106A18-1S | PLUG - REMOTE INDICATOR END 1 1/2 NAV/COM 300R ---- TYPE RT-514R & RT-515R ONLY | A/R | |
| | MS3057-10A | CLAMP - REMOTE INDICATOR END-----1 1/2 NAV/COM 300R ---- TYPE RT-514R & RT-515R ONLY | A/R | |
| - 38 | 31640 | INDICATOR - TYPE IN-514R USED ON 1 1/2 NAV/COM 300R---- RT-514R ONLY | A/R | |

CONTINUED ON NEXT PAGE

| FIGURE AND INDEX NO. | PART NUMBER | DESCRIPTION<br>1 2 3 4 5 6 7 | UNITS PER ASSY | USABLE ON CODE |
|---|---|---|---|---|
| | | DUAL RADIO INSTALLATION - THE FOLLOWING PARTS ARE REQUIRED IN ADDITION TO THOSE REQUIRED FOR A SINGLE RADIO INSTALLATION. ITEM 47 REPLACES ITEM 32 AND ITEM 50 REPLACES ITEM 33 WHEN DUAL RADIOS ARE INSTALLED ALL MODELS EXCEPT 150 | | |
| - 39 | | CESSNA 1 1/2 NAV/COM 300 TRANSCEIVERS ---------- | | |
| | 30410-1014 | TRANSCEIVER - 100 CHANNEL - 14 VOLT - TYPE 514A-10 - ---- THRU 1964 ONLY - WHEN EXHAUSTED USE 34710-1014 | A/R | |
| | 30410-1028 | TRANSCEIVER - 100 CHANNEL - 28 VOLT - TYPE 514A-10 - ---- THRU 1964 ONLY - WHEN EXHAUSTED USE 30410-1228 | A/R | |
| | 30410-1214 | TRANSCEIVER - 100 CHANNEL - 14 VOLT - TYPE 514A-12 - ---- THRU 1965 ONLY - WHEN EXHAUSTED USE 34710-1014 | A/R | |
| | 30410-1228 | TRANSCEIVER - 100 CHANNEL - 28 VOLT - TYPE RT-514A-12 ----- THRU 1965 ONLY - WHEN EXHAUSTED - NOT AVAILABLE | A/R | |
| | 30410-1114 | TRANSCEIVER - 360 CHANNEL - 14 VOLT - TYPE RT-514A-11 ----- THRU 1964 ONLY - WHEN EXHAUSTED USE 30410-1314 | A/R | |
| | 30410-1128 | TRANSCEIVER - 360 CHANNEL - 28 VOLT - TYPE RT-514A-11 ----- THRU 1964 ONLY - WHEN EXHAUSTED USE 30410-1328 | A/R | |
| | 30410-1314 | TRANSCEIVER - 360 CHANNEL - 14 VOLT - TYPE RT-514A-13 ----- THRU 1965 ONLY - WHEN EXHAUSTED - NOT AVAILABLE | A/R | |
| | 30410-1328 | TRANSCEIVER - 360 CHANNEL - 28 VOLT - TYPE RT-514A-13 ----- THRU 1965 ONLY - WHEN EXHAUSTED - NOT AVAILABLE | A/R | |
| | 34710-1014 | TRANSCEIVER - 90 CHANNEL - 14 VOLT - TYPE RT-516A - ---- 1966 & ON | A/R | |
| | | CESSNA 1 1/2 NAV/COM 300R TRANSCEIVERS - REMOTE INDICATOR | | |
| | 32580-1314 | TRANSCEIVER - 360 CHANNEL - 14 VOLT - TYPE RT-514R-13 ----- THRU 1964 ONLY - WHEN EXHAUSTED USE 34640-1114 | A/R | |
| | 32580-1328 | TRANSCEIVER - 360 CHANNEL - 28 VOLT - TYPE RT-514R-13 ----- THRU 1964 ONLY - WHEN EXHAUSTED USE 34640-1128 | A/R | |
| | 32580-1114 | TRANSCEIVER - 360 CHANNEL - 14 VOLT - TYPE RT-514R-11 ----- THRU 1965 ONLY - WHEN EXHAUSTED USE 34640-1114 | A/R | |
| | 32580-1128 | TRANSCEIVER - 360 CHANNEL - 28 VOLT - TYPE RT-514R-11 ----- THRU 1965 ONLY - WHEN EXHAUSTED USE 34640-1128 | A/R | |
| | 32580-1614 | TRANSCEIVER - 360 CHANNEL - 14 VOLT - TYPE RT-514R-16 ----- THRU 1965 ONLY - WHEN EXHAUSTED - NOT AVAILABLE FOR EXPORT ONLY | A/R | |
| | 32580-1628 | TRANSCEIVER - 360 CHANNEL - 28 VOLT - TYPE RT-514R-16 ----- THRU 1965 ONLY - WHEN EXHAUSTED - NOT AVAILABLE FOR EXPORT ONLY | A/R | |
| | 34640-1114 | TRANSCEIVER - 360 CHANNEL - 14 VOLT - TYPE RT-515R - ---- 1966 & ON | A/R | |
| | 34640-1128 | TRANSCEIVER - 360 CHANNEL - 28 VOLT - TYPE RT-515R - ---- 1966 & ON | A/R | |
| | | ATTACHING PARTS | | |
| - 41 | 30420 | MOUNTING - FOR USE ONLY WITH 1 1/2 NAV/COM 300 - TYPE ---- RT-514A TRANSCEIVERS | A/R | |
| | 32570 | MOUNTING - FOR USE ONLY WITH 1 1/2 NAV/COM 300R - TYPE ---- RT-514R TRANSCEIVERS | A/R | |
| - 42 | 1270465-3 | SUPPORT STRAP 182, 205, 206, P206, U206, TP206, TU206, 210 & T210 ONLY | 2 | |
| - 43 | AN507-632R6 | SCREW - ATTACHES SUPPORT STRAP-----182, 205, 206, P206,---- U206, TP206, TU206, 210 & T210 ONLY | 2 | |
| - 44 | MS20365-632C | NUT - ATTACHES SUPPORT STRAP 182, 205, 206, P206, U206, TP206, TU206, 210 & T210 ONLY | 2 | |
| | S1021Z6-8 | SCREW ---------- | 4 | |
| | NAS446-2-3 | NUT ---------- | 4 | |
| | | ---*--- | | |

CONTINUED ON NEXT PAGE

| FIGURE AND INDEX NO. | PART NUMBER | DESCRIPTION<br>1 2 3 4 5 6 7 | UNITS PER ASSY | USABLE ON CODE |
|---|---|---|---|---|
| 2-8- 45 | | TRANSMITTER SELECTOR SWITCH & AUDIO AMPLIFIER-----SEE ---- FIGURE 9-1 | 1 | |
| - 46 | | VHF ANTENNA INSTALLATION SEE FIGURE 8-1 ---------- | 1 | |
| - 47 | | CABLE ASSY - OMNI TEE ADAPTER TO BALUN STUB REPLACES ITEM 32 WHEN DUAL RADIOS ARE INSTALLED ALL MODELS EXCEPT 336 & 337 | N/P | |
| - 48 | RG-58A/U | COAXIAL CABLE - BULK ITEM ---------- | A/R | |
| | UG-88C/U | PLUG-COAXIAL - CONNECTS TO BALUN CONNECTOR ---------- 180, 182, 185, 205, 206, P206, U206, TP206, TU206, 210 & T210 ONLY | 1 | |
| | UG-291/U | PLUG-COAXIAL - CONNECTS TO BALUN CONNECTOR 172 ONLY | 1 | |
| - 49 | UG-89-U | JACK-COAXIAL - CONNECTS TO TEE ADAPTER---------- | 1 | |
| - 50 | | CABLE ASSY - OMNI TEE ADAPTER TO OMNI CABLE CONNECTION ---- AT WING ROOT REPLACES ITEM 33 WHEN DUAL RADIOS ARE INSTALLED 336 & 337 ONLY | N/P | |
| - 51 | RG-58A/U | COAXIAL CABLE - BULK ITEM ---------- | A/R | |
| | UG-88C/U | PLUG-COAXIAL CONNECTS TO WING ROOT CONNECTION ---- | 1 | |
| - 52 | UG-89/U | JACK-COAXIAL-CONNECTS TO TEE ADAPTER ---------- | 1 | |
| | | CABLE ASSY - TRANSCEIVER TO OMNI TEE ADAPTER ---------- | N/P | |
| - 53 | RG-58A/U | COAXIAL CABLE - TWO LEADS 17 INCHES LONG - BULK ITEM ---- | A/R | |
| - 54 | UG-88C/U | PLUG-COAXIAL - TEE ADAPTER END ---------- | 2 | |
| | UG-1050/U | CONNECTOR-COAXIAL-TRANSCEIVER END---------- | 1 | |
| - 55 | UG-274/U | TEE ADAPTER - OMNI ---------- | 1 | |
| - 56 | | CABLE ASSY - TRANSCEIVER TO VHF ANTENNA ---------- | N/P | |
| | RG-58A/U | COAXIAL CABLE - BULK ITEM ---------- | A/R | |
| | UG-1051/U | CONNECTOR-COAXIAL - TRANSCEIVER END ---------- | 1 | |
| | UG-88C/U | PLUG-COAXIAL - ANT END 172, 180, 185, 336 & 337 ONLY | 1 | |
| | UG-913/U | PLUG-COAXIAL - RIGHT ANGLE - ANT END ---------- 210 & T210 ONLY | 1 | |
| - 57 | MRE18SG7H | CONNECTOR - TRANSCEIVER END 1 1/2 NAV/COM 300 ---- TYPE RT-514A & RT-516A ONLY | A/R | |
| | MRE18SG7H | CONNECTOR - TRANSCEIVER END 1 1/2 NAV/COM 300R ---- TYPE RT-514R & RT-515R ONLY | A/R | |
| | MRE26SG7H | PLUG - REMOTE INDICATOR END 1 1/2 NAV/COM 300R ---- TYPE RT-514R & RT-515R ONLY | A/R | |
| | MS3106A181S | CLAMP - REMOTE INDICATOR END-----1 1/2 NAV/COM 300R ---- TYPE RT-514R & RT-515R ONLY | A/R | |
| - 58 | 31640 | INDICATOR - TYPE IN-514R USED ON 1 1/2 NAV/COM 300R---- TYPE RT-514R & RT-515R ONLY | 1 | |
| - 59 | S1360-15 | CIRCUIT BREAKER ALL MODELS EXCEPT 336 & 337 ---------- | 1 | |
| - 60 | S1360-8 | CIRCUIT BREAKER 336 & 337 ONLY ---------- | 1 | |
| | S1360-5 | CIRCUIT BREAKER FOR USE IN AUDIO AMPLIFIER CKT--------- | 1 | |

CESSNA 300 MARKER BEACON RECEIVER INSTALLATION

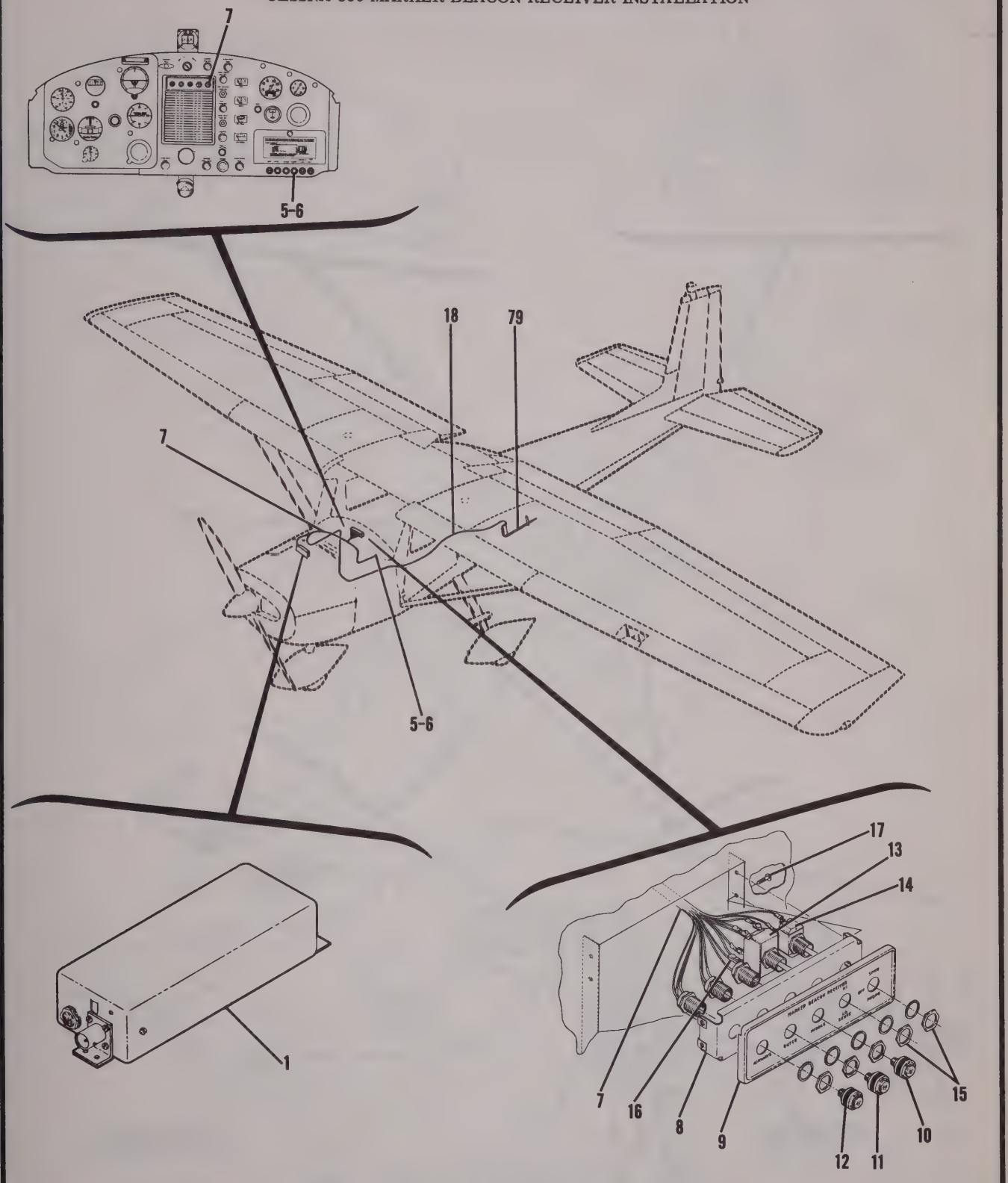


## 150 SERIAL 15061533 & ON

Figure 2-9. Cessna 300 Marker Beacon Receiver Installation (Type R-502B) - Sheet 1

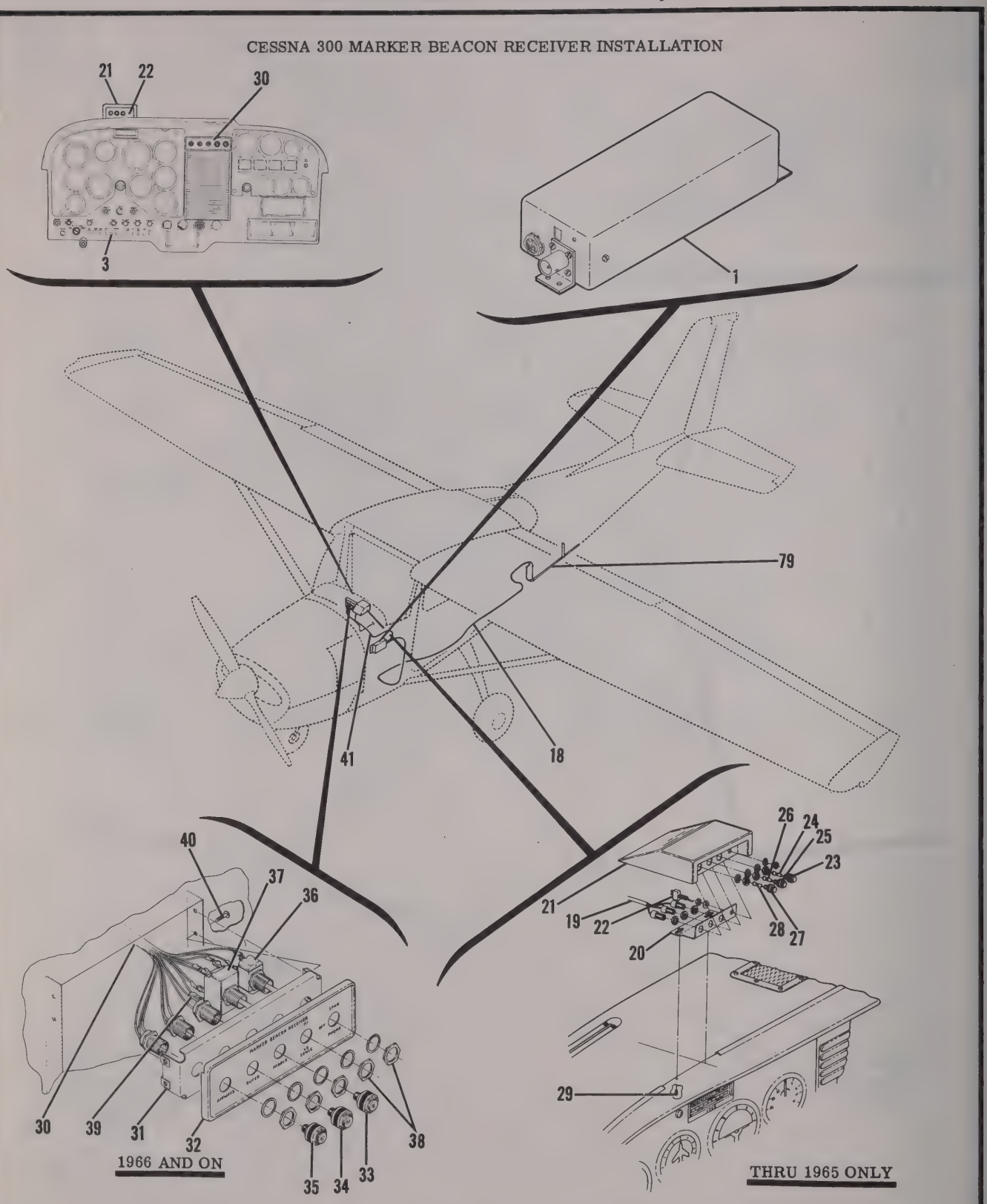


## 172 SERIAL 17250573 & ON

Figure 2-9. Cessna 300 Marker Beacon Receiver Installation (Type R-502B) - Sheet 2

CESSNA 300 MARKER BEACON RECEIVER INSTALLATION

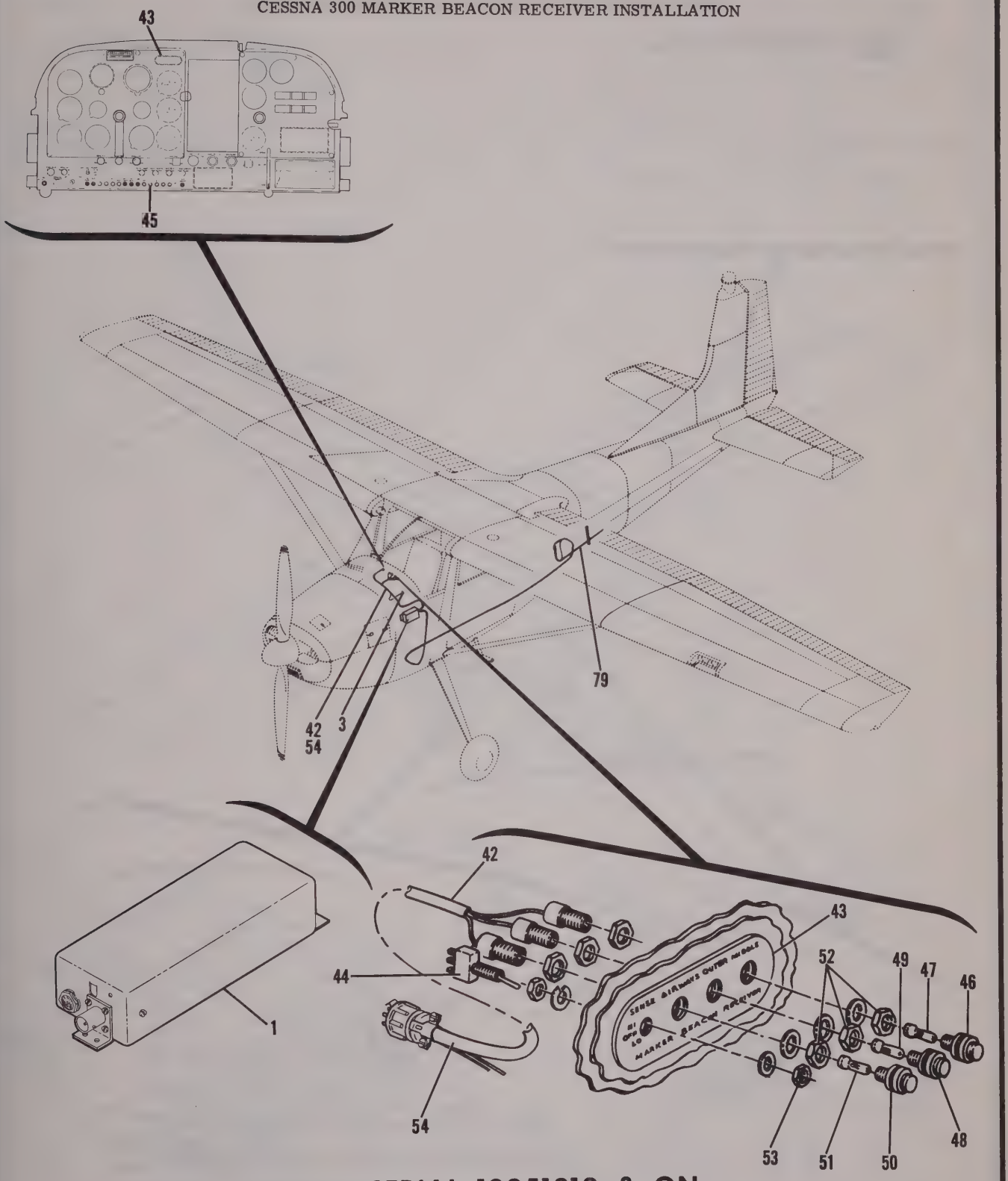


**180 SERIAL 18051313 & ON**
**185 SERIAL 185-0654 & ON**

Figure 2-9. Cessna 300 Marker Beacon Receiver Installation (Type R-502B) - Sheet 3

CESSNA 300 MARKER BEACON RECEIVER INSTALLATION

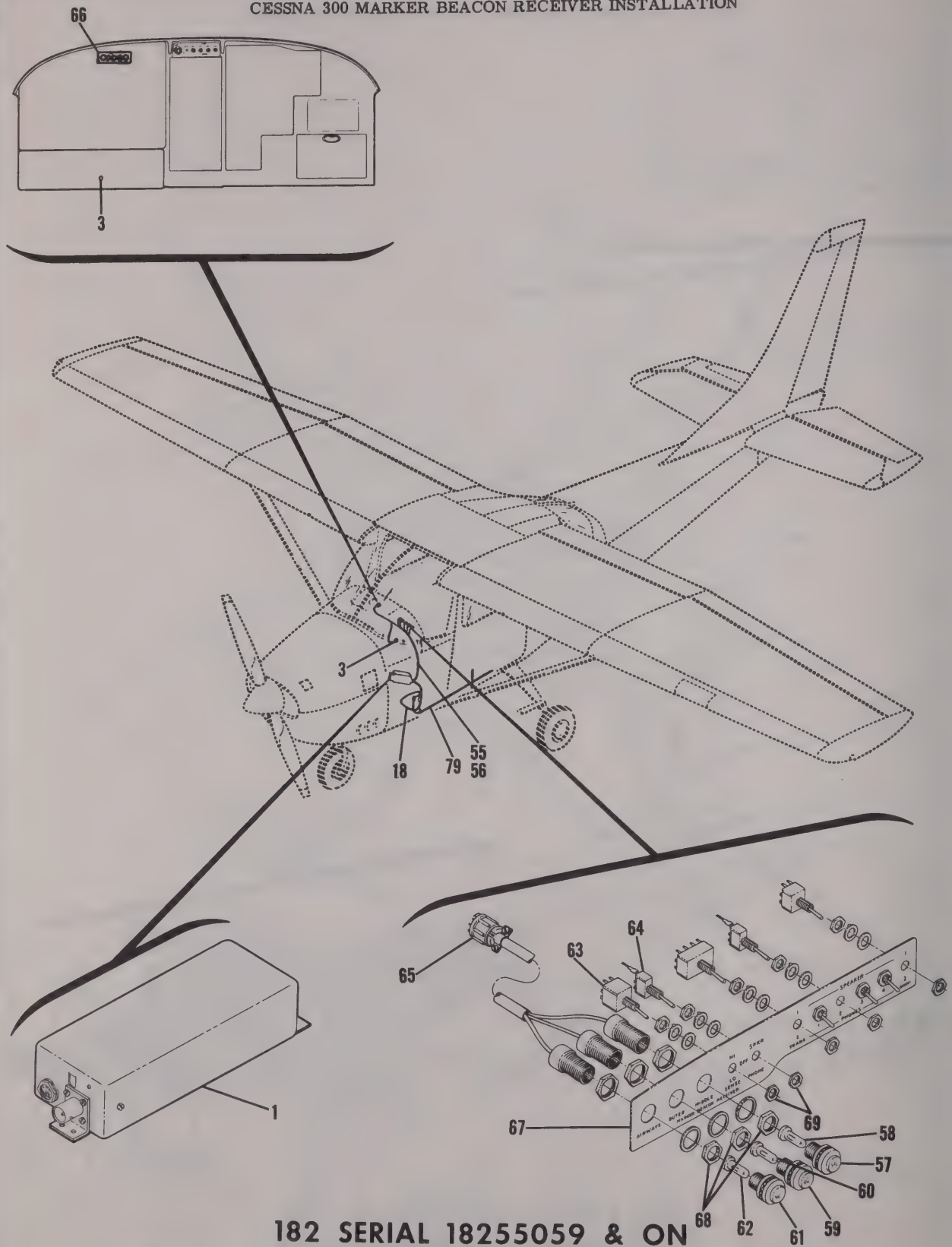


Figure 2-9. Cessna 300 Marker Beacon Receiver Installation (Type R-502B) - Sheet 4

CESSNA 300 MARKER BEACON RECEIVER INSTALLATION

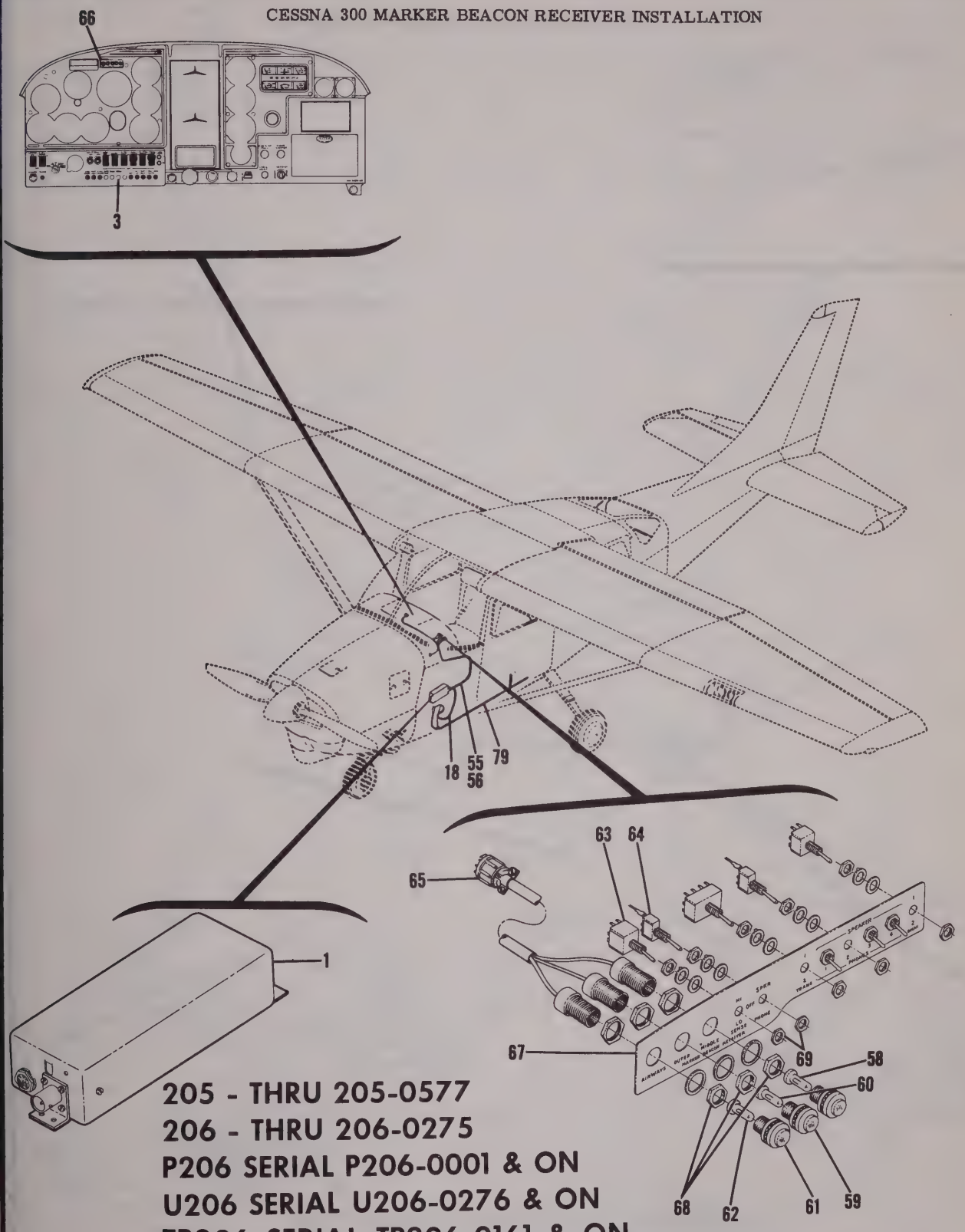


**205 - THRU 205-0577**
**206 - THRU 206-0275**
**P206 SERIAL P206-0001 & ON**
**U206 SERIAL U206-0276 & ON**
**TP206 SERIAL TP206-0161 & ON**
**TU206 SERIAL TU206-0438 & ON**

Figure 2-9. Cessna 300 Marker Beacon Receiver Installation (Type R-502B) - Sheet 5

CESSNA 300 MARKER BEACON RECEIVER INSTALLATION

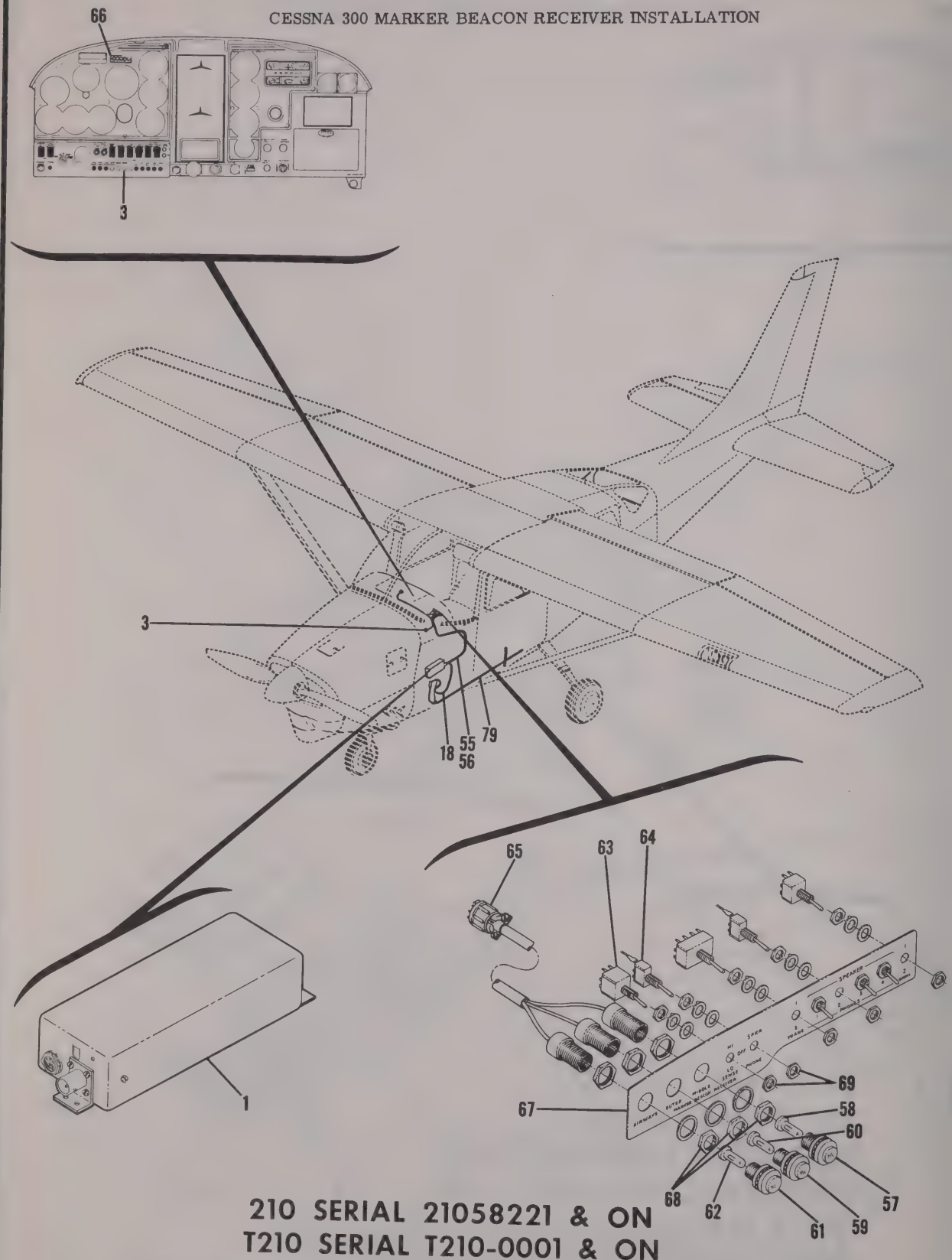


Figure 2-9. Cessna 300 Marker Beacon Receiver Installation (Type R-502B) - Sheet 6

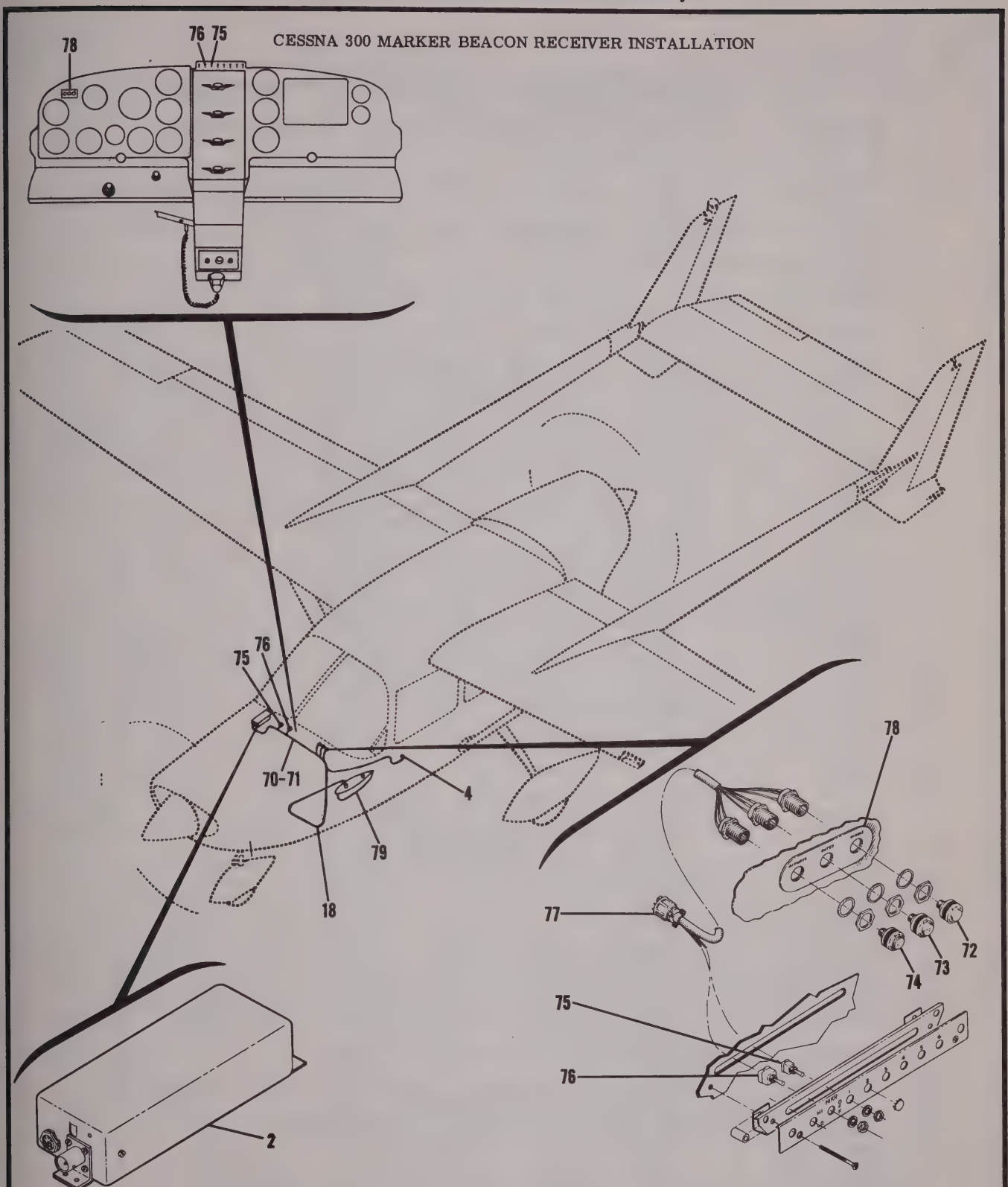


**337 SERIAL 337-0001 & ON**
**336 SERIAL 336-0001 & ON**

Figure 2-9. Cessna 300 Marker Beacon Receiver Installation (Type R-502B) - Sheet 7

| FIGURE AND INDEX NO. | PART NUMBER | DESCRIPTION<br>1 2 3 4 5 6 7 | UNITS PER ASSY | USABLE ON CODE |
|---|---|---|---|---|
| 2-9- | | CESSNA MARKER BEACON 300 INSTALLATION-----ALL MODELS EXCEPT 150 IS AVAILABLE AT 1966 & ON | N/P | |
| - 1 | 31240-0014 | MARKER BEACON RECEIVER - TYPE R-502B - 14 VOLT SYSTEM ONLY | 1 | |
| - 2 | 31240-0028 | MARKER BEACON RECEIVER - TYPE R-502B - 28 VOLT SYSTEM ONLY | 1 | |
| | | ATTACHING PARTS | | |
| | AN515-6R8 | SCREW 150 & 172 | 4 | |
| | AN507-632R8 | SCREW 182, 205, 206, P206, U206, TP206, TU206, 210 & T210 | 4 | |
| | AN515-6R6 | SCREW 336 & 337 | 4 | |
| | AN960-6L | WASHER-----180 & 185 | 4 | |
| | AN960-10 | WASHER-----182, 205, 206, P206, U206, TP206, TU206, 210 & T210 | 4 | |
| | MS20365-632C | NUT 150, 172, 180 & 185 | 4 | |
| | MS20364-632C | NUT 182, 205, 206, P206, U206, TP206, TU206, 210 & T210 | 4 | |
| | NAS679A06 | NUT 336 & 337 | 4 | |
| | | ---*--- | | |
| | 0770093-1 | PLACARD 180 & 185 | 1 | |
| | 0770696-1 | PLACARD 182, 205, 206 & 210 THRU 1964 ONLY | 1 | |
| | 0770717-2 | PLACARD 1965 & ON 182, 206, P206, U206, TP206, TU206, 210 & T210 ONLY | 1 | |
| | 1400019-14 | PLACARD 336 ONLY | 1 | |
| | | MARKER BEACON ANTENNA INSTALLATION SEE FIGURE 8-4 | N/P | |
| - 3 | S1360-5 | CIRCUIT BREAKER ALL MODELS EXCEPT 336 & 337 | 1 | |
| - 4 | S1360-2 | CIRCUIT BREAKER 336 & 337 ONLY | 1 | |
| - 5 | S1091-5 | FUSE 150 ONLY | 1 | |
| - 6 | S1090-11 | CAP 150 ONLY | 1 | |
| - 7 | 0470400-222 | CABLE ASSY MKR BCN RECEIVER TO MKR BCN LIGHTS 150 ONLY | 1 | |
| - 8 | 0470412-1 | MOUNTING PLATE ASSY | 1 | |
| - 9 | 0470413-2 | FACEPLATE | 1 | |
| - 10 | MS25041-4-328 | LAMP ASSY - MIDDLE - AMBER | 1 | |
| | MS25237-328 | LAMP - MIDDLE | 1 | |
| - 11 | MS25041-10-328 | LAMP ASSY - OUTER - BLUE | 1 | |
| | MS25237-328 | LAMP - OUTER | 1 | |
| - 12 | MS25041-1-328 | LAMP ASSY - AIRWAY - WHITE | 1 | |
| | MS25237-328 | LAMP - AIRWAY | 1 | |
| - 13 | S392-1 | SWITCH | 1 | |
| - 14 | S382-1 | SWITCH | 1 | |
| - 15 | S1216-4 | NUT | 2 | |
| | 28371-0009 | PLUG-----8 PIN-----ARC | 1 | |
| - 16 | 40 OHM 3W | RESISTOR 0M | 1 | |
| | | ATTACHING PARTS | | |
| - 17 | S1021Z6-8 | SCREW 150 ONLY | 4 | |
| | | ---*--- | | |
| - 18 | | CABLE ASSY RECEIVER TO ANTENNA ALL MODELS | N/P | |
| | RG-58A/U | COAXIAL CABLE - BULK ITEM | A/R | |
| | UG88C/U | PLUG-----TWO REQD ON 336 & 337 MODELS | 1 | |
| | S1367-2-10 | TERMINAL ALL MODELS EXCEPT 336 & 337 | 1 | |
| | S1367-1-8 | TERMINAL ALL MODELS EXCEPT 336 & 337 | 1 | |
| - 19 | 0570400-317 | LIGHTS ASSY-----172 THRU 1965 ONLY | 1 | |
| - 20 | 0570024-2 | BRACKET ASSY | 1 | |
| - 21 | 0570024-3 | COVER | 1 | |
| - 22 | MST-205P | SWITCH | 1 | |
| - 23 | MS25041-4-328 | LAMP ASSY - MIDDLE - AMBER | 1 | |
| - 24 | MS25237-328 | LAMP - MIDDLE | 1 | |
| - 25 | MS25041-10-328 | LAMP ASSY - OUTER - BLUE | 1 | |
| - 26 | MS25237-328 | LAMP - OUTER | 1 | |
| - 27 | MS25041-1-328 | LAMP ASSY - AIRWAY - WHITE | 1 | |
| - 28 | MS25237-328 | LAMP - AIRWAY | 1 | |
| | | ATTACHING PARTS | 1 | |
| - 29 | AN515-6R6 | SCREW | 2 | |
| | | ---*--- | | |
| - 30 | 0570400-251 | MARKER BEACON CABLE ASSY 1966 & ON 172 ONLY<br>RECEIVER TO MKR BCN ANTENNA | 1 | |
| - 31 | 0470412-1 | MOUNTING PLATE ASSY | 1 | |
| - 32 | 0470413-1 | FACE PLATE | 1 | |
| - 33 | MS25041-4-328 | LAMP ASSY - MIDDLE - AMBER | 1 | |
| | MS25237-328 | LAMP - MIDDLE | 1 | |
| - 34 | MS25041-10-328 | LAMP ASSY - OUTER - BLUE | 1 | |
| | MS25237-328 | LAMP - OUTER | 1 | |

CONTINUED ON NEXT PAGE

| FIGURE AND INDEX NO. | PART NUMBER | DESCRIPTION<br>1 2 3 4 5 6 7 | UNITS PER ASSY | USABLE ON CODE |
|---|---|---|---|---|
| 2-9- 35 | MS25041-1-328 | LAMP ASSY - AIRWAY - WHITE | 1 | |
| | MS25237-328 | LAMP - AIRWAY | 1 | |
| - 36 | S382-1 | SWITCH | 1 | |
| - 37 | S392-1 | SWITCH | 1 | |
| - 38 | S1216-4 | NUT | 2 | |
| - 39 | 40 OHM 3W | RESISTOR | 1 | |
| | 28371-0009 | CONNECTOR | 1 | |
| | | ATTACHING PARTS | | |
| - 40 | S1021Z6-6 | SCREW 172 - 1966 & ON ONLY<br>---*--- | 4 | |
| - 41 | 0570400-216 | CABLE ASSY 172 THRU 1965 ONLY RECEIVER TO QUICK DISCONNECTS | 1 | |
| - 42 | 0770400-334 | CABLE ASSY 180 & 185 ONLY MKR BCN LTS TO QUICK DISCONNECTS | 1 | |
| - 43 | 0770093-1 | PLACARD ASSY | 1 | |
| - 44 | MST-205P | SWITCH | 1 | |
| - 45 | S1360-5 | CIRCUIT BREAKER | 1 | |
| - 46 | MS25041-4-328 | LAMP ASSY - MIDDLE - AMBER | 1 | |
| - 47 | MS25237-328 | LAMP - MIDDLE | 1 | |
| - 48 | MS25041-10-328 | LAMP ASSY - OUTER - BLUE | 1 | |
| - 49 | MS25237-328 | LAMP - OUTER | 1 | |
| - 50 | MS25041-1-328 | LAMP ASSY - AIRWAY - WHITE | 1 | |
| - 51 | MS25237-328 | LAMP - AIRWAY | 1 | |
| - 52 | S1216-4 | NUT | 3 | |
| - 53 | S1216-3 | NUT | 1 | |
| - 54 | 0770400-214 | CABLE ASSY 180 & 185 ONLY RECEIVER TO QUICK DISCONNECTS | 1 | |
| - 55 | 0770692-1 | CABLE ASSY 182, 205, 206 & 210 THRU 1964 ONLY RECEIVER TO MARKER BEACON LIGHTS | 1 | |
| | 0770691-1 | BACKING PLATE | 1 | |
| | 40 OHM 3W | RESISTOR OM | 1 | |
| | 470 OHM 1/2W | RESISTOR | 1 | |
| | 1K OHM 1/2W | RESISTOR | 1 | |
| - 56 | 0770750-204 | CABLE ASSY 182, P206, U206, TP206, TU206, 210 & T210 ONLY - 1965 & ON RECEIVER TO MARKER BEACON LIGHTS | 1 | |
| - 57 | MS25041-4-328 | LAMP ASSY - MIDDLE - AMBER | 1 | |
| - 58 | MS25237-328 | LAMP | 1 | |
| - 59 | MS25041-10-328 | LAMP ASSY - OUTER - BLUE | 1 | |
| - 60 | MS25237-328 | LAMP - OUTER | 1 | |
| - 61 | MS25041-1-328 | LAMP ASSY - AIRWAY - WHITE | 1 | |
| - 62 | MS25237-328 | LAMP - AIRWAY | 1 | |
| - 63 | MST-205P | SWITCH AELM | 1 | |
| - 64 | MST-105E | SWITCH AELM | 1 | |
| | 40 OHM 3W | RESISTOR OM | 1 | |
| - 65 | 28371-009 | PLUG-----ARC | 1 | |
| - 66 | 0770696-1 | PLACARD ASSY 182, 205, 206 & 210 THRU 1964 ONLY | 1 | |
| - 67 | 0770717-2 | PLACARD ASSY 182, P206, U206, TP206, TU206, 210 & T210 1965 & ON | 1 | |
| - 68 | S1216-2 | NUT 5 REQD PRIOR TO 1965 182, 205, 206, P206, U206, TP206, TU206, 210 & T210 ONLY | 3 | |
| - 69 | S1216-3 | NUT 182, P206, U206, TP206, TU206, 210 & T210 - 1965 & ON | 2 | |
| - 70 | 1470000-28 | CABLE ASSY 336 ONLY RECEIVER TO MARKER BEACON LIGHTS | 1 | |
| - 71 | 1570000-223 | CABLE ASSY 337 ONLY RECEIVER TO MARKER BEACON LIGHTS | 1 | |
| - 72 | MS25041-4-328 | LAMP ASSY - MIDDLE - AMBER | 1 | |
| | MS25237-328 | LAMP - MIDDLE | 1 | |
| - 73 | MS25041-10-328 | LAMP ASSY - OUTER - BLUE | 1 | |
| | MS25237-328 | LAMP - OUTER | 1 | |
| - 74 | MS25041-1-328 | LAMP ASSY - AIRWAY - WHITE | 1 | |
| | MS25237-328 | LAMP - AIRWAY | 1 | |
| - 75 | 8866K1 | SWITCH - SPKR/PHONE | 1 | |
| - 76 | 8867K1 | SWITCH - HI/LO | 1 | |
| | 82 OHM 2W | RESISTOR OM | 1 | |
| - 77 | 28371-0009 | PLUG-----ARC | 1 | |
| - 78 | 1400019-14 | PLACARD 336 ONLY | 1 | |
| - 79 | | MARKER BEACON ANTENNA INSTALLATION SEE FIGURE 8-4 | 1 | |

CESSNA ADF 300 RADIO INSTALLATION

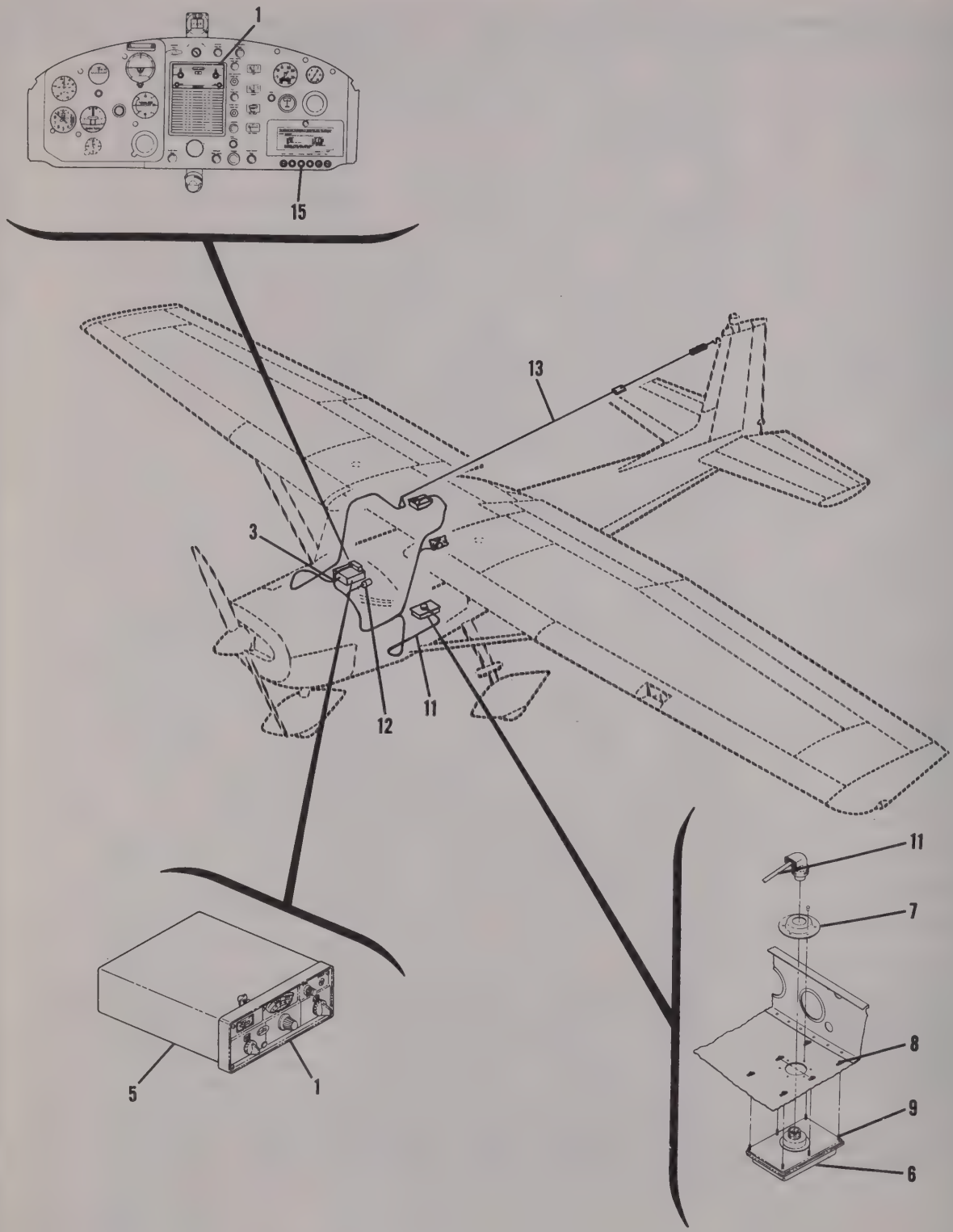


## 150 SERIAL 15060773 & ON

Figure 2-10. Cessna ADF 300 (Type 521B) Radio Installation - Sheet 1

CESSNA ADF 300 RADIO INSTALLATION

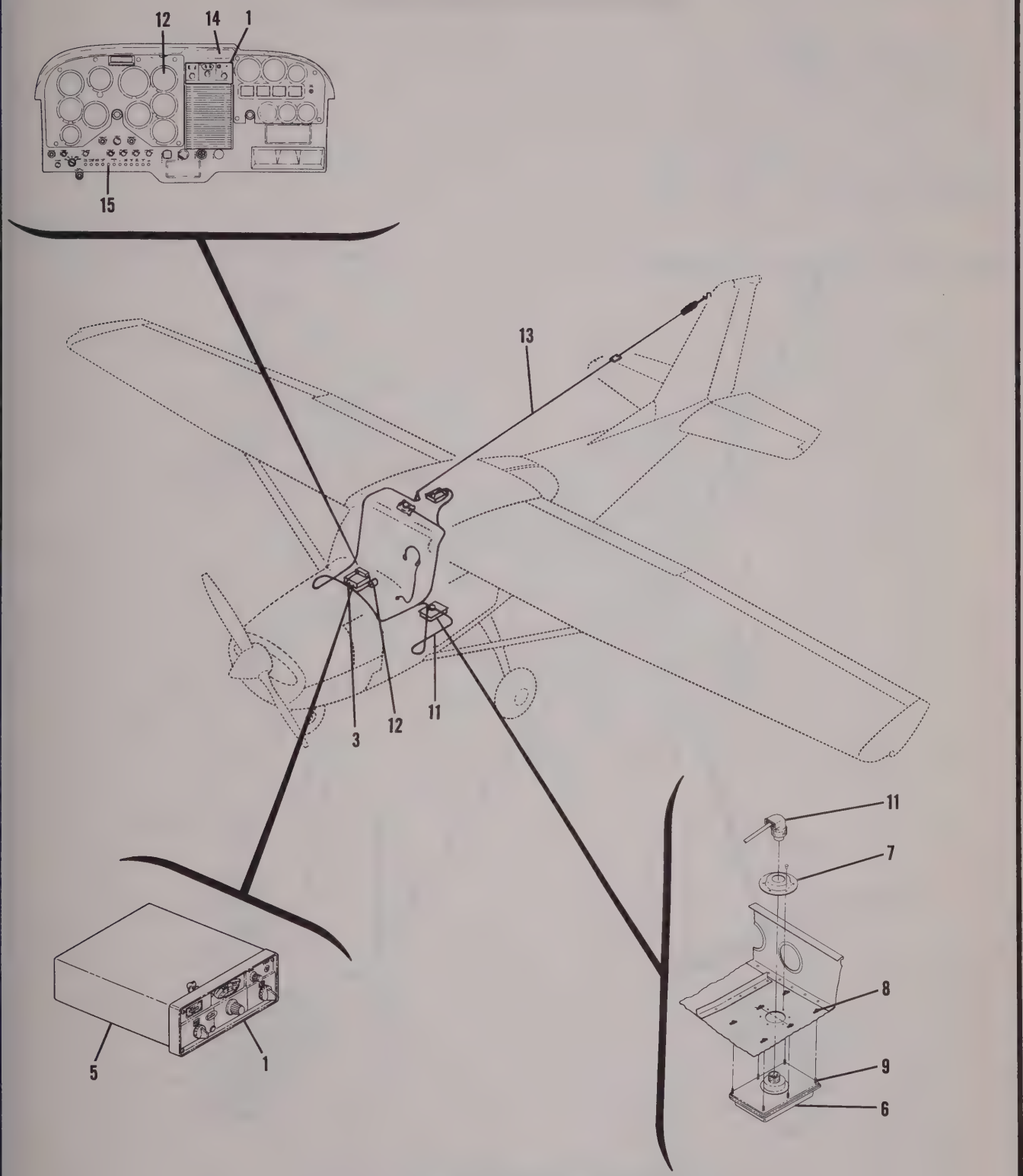


## 172 SERIAL 17251823 & ON

Figure 2-10. Cessna ADF 300 (Type 521B) Radio Installation - Sheet 2

CESSNA ADF 300 RADIO INSTALLATION

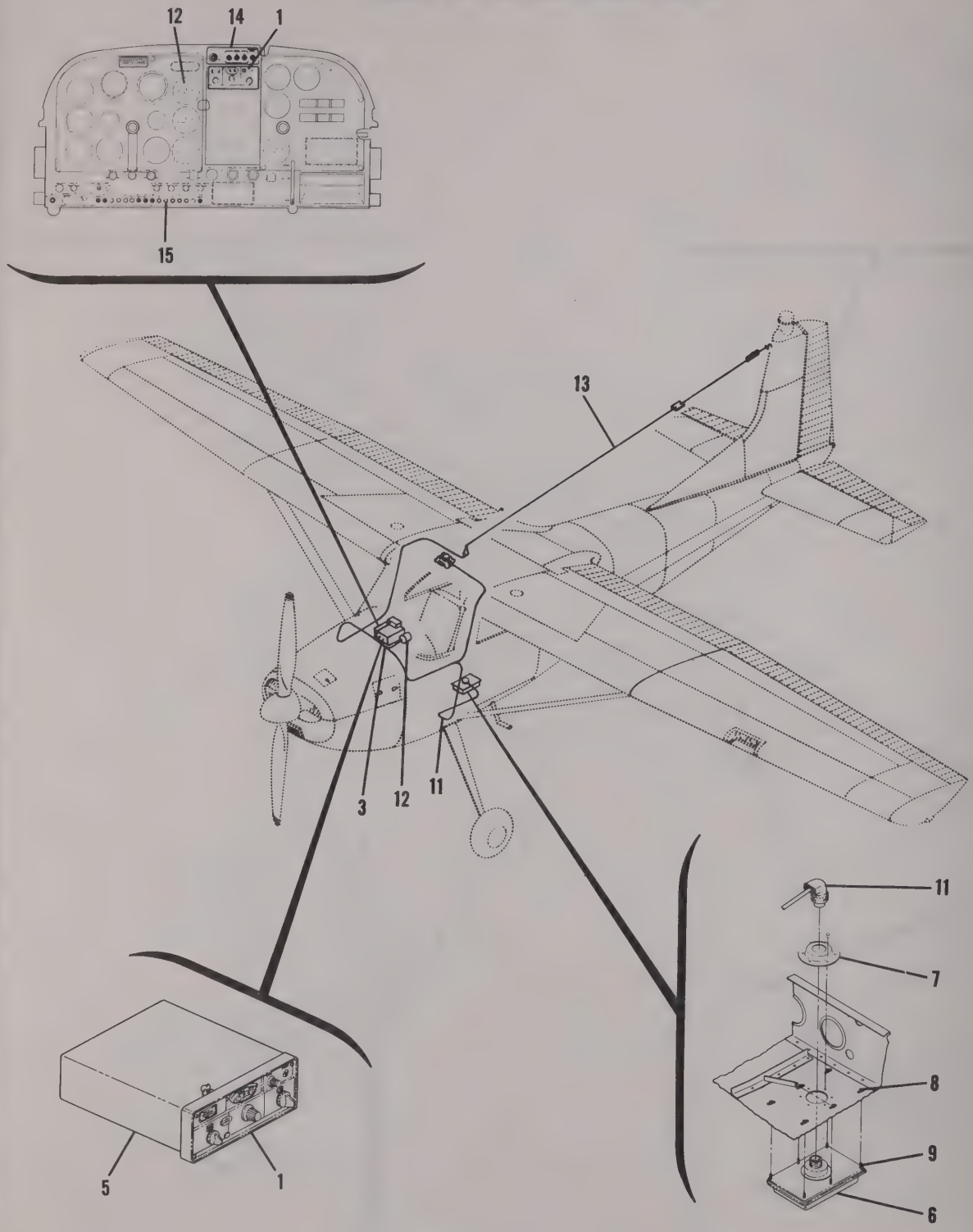


**180 SERIAL 18051446 & ON**
**185 SERIAL 185-0777 & ON**

Figure 2-10. Cessna ADF 300 (Type 521B) Radio Installation - Sheet 3

CESSNA ADF 300 RADIO INSTALLATION

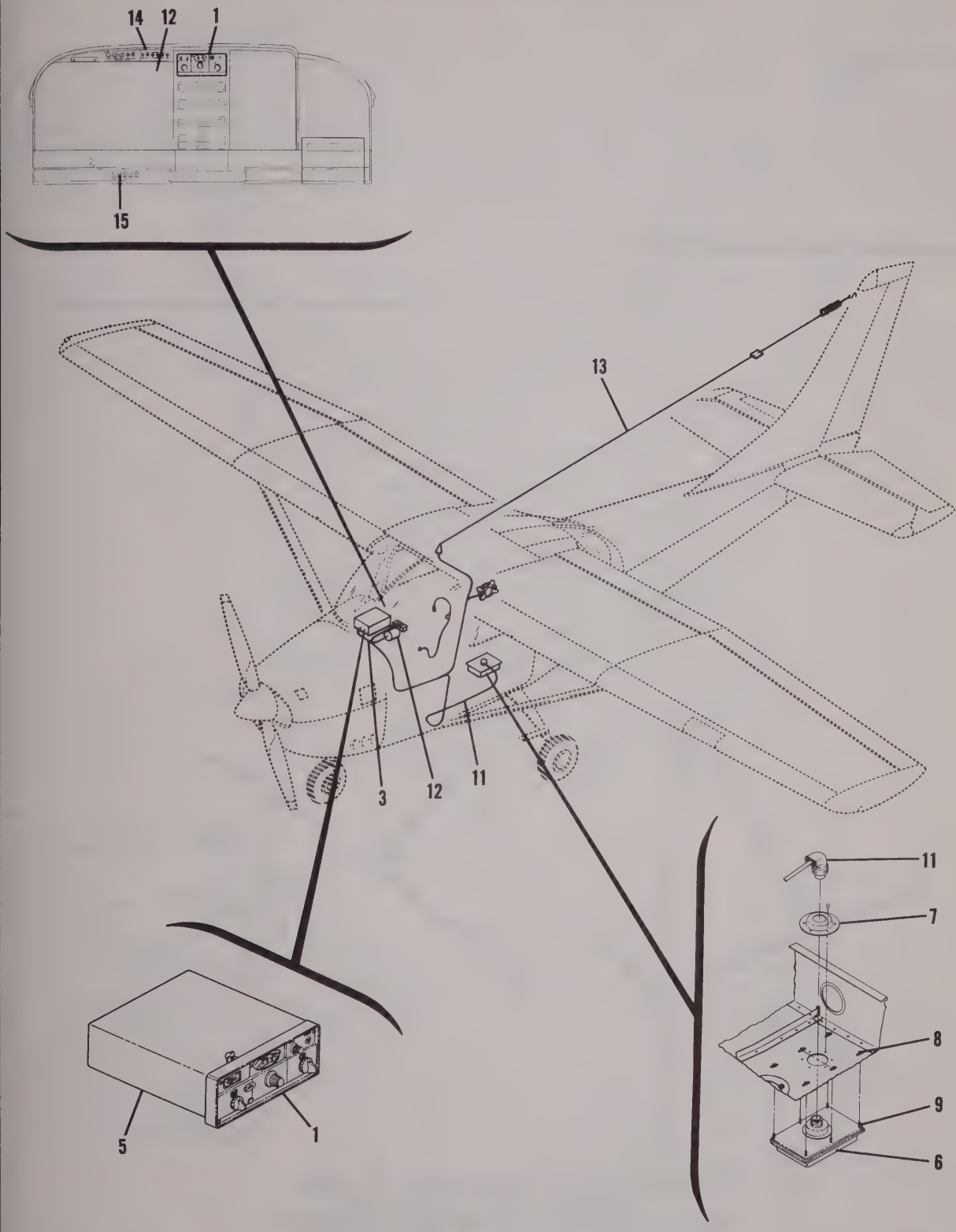


## 182 SERIAL 18255845 & ON

Figure 2-10. Cessna ADF 300 (Type 521B) Radio Installation - Sheet 4

CESSNA ADF 300 RADIO INSTALLATION

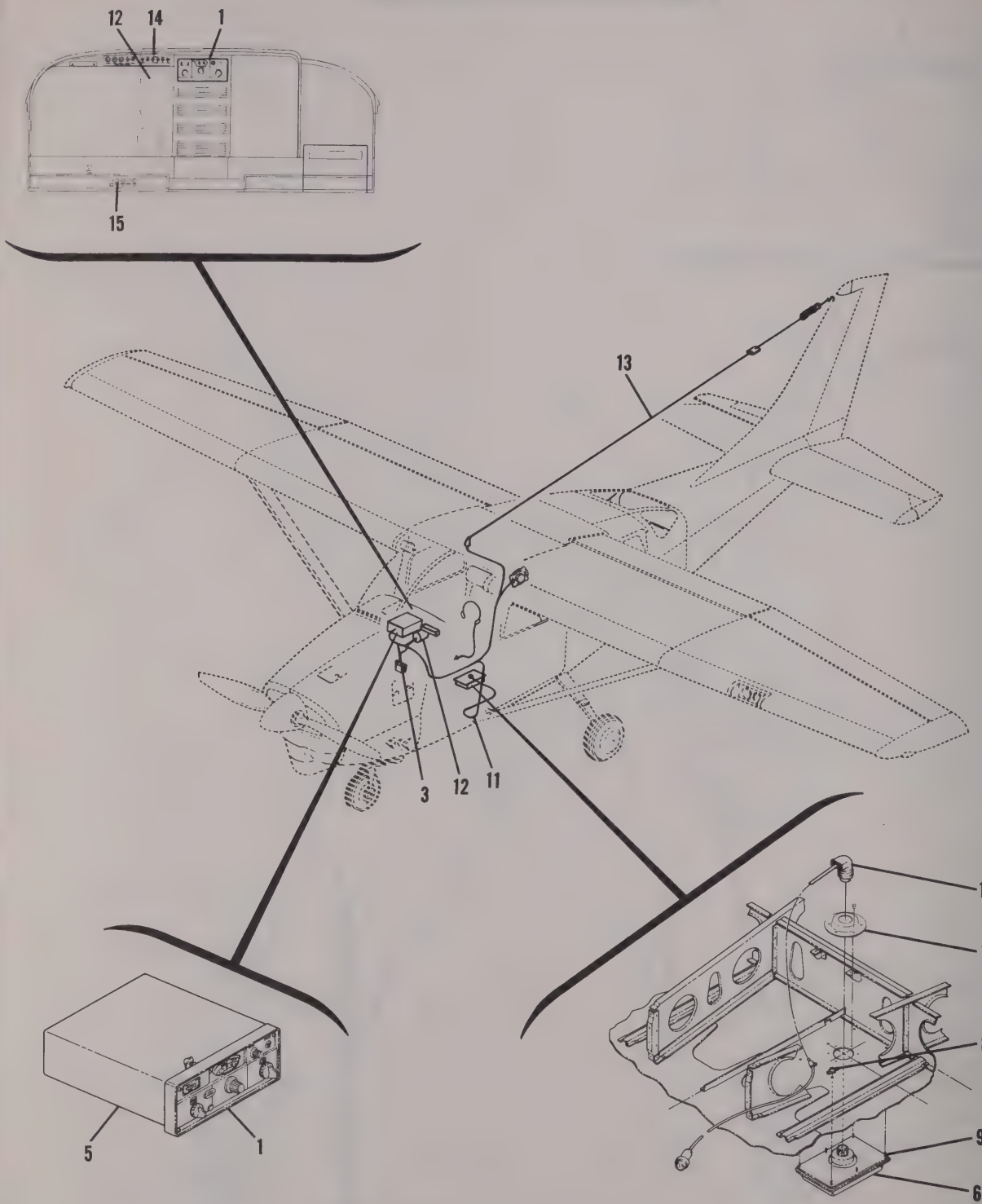


**P206 SERIAL P206-0001 & ON**
**U206 SERIAL U206-0276 & ON**
**210 SERIAL 21058511 & ON**

Figure 2-10. Cessna ADF 300 (Type 521B) Radio Installation - Sheet 5

CESSNA ADF 300 RADIO INSTALLATION

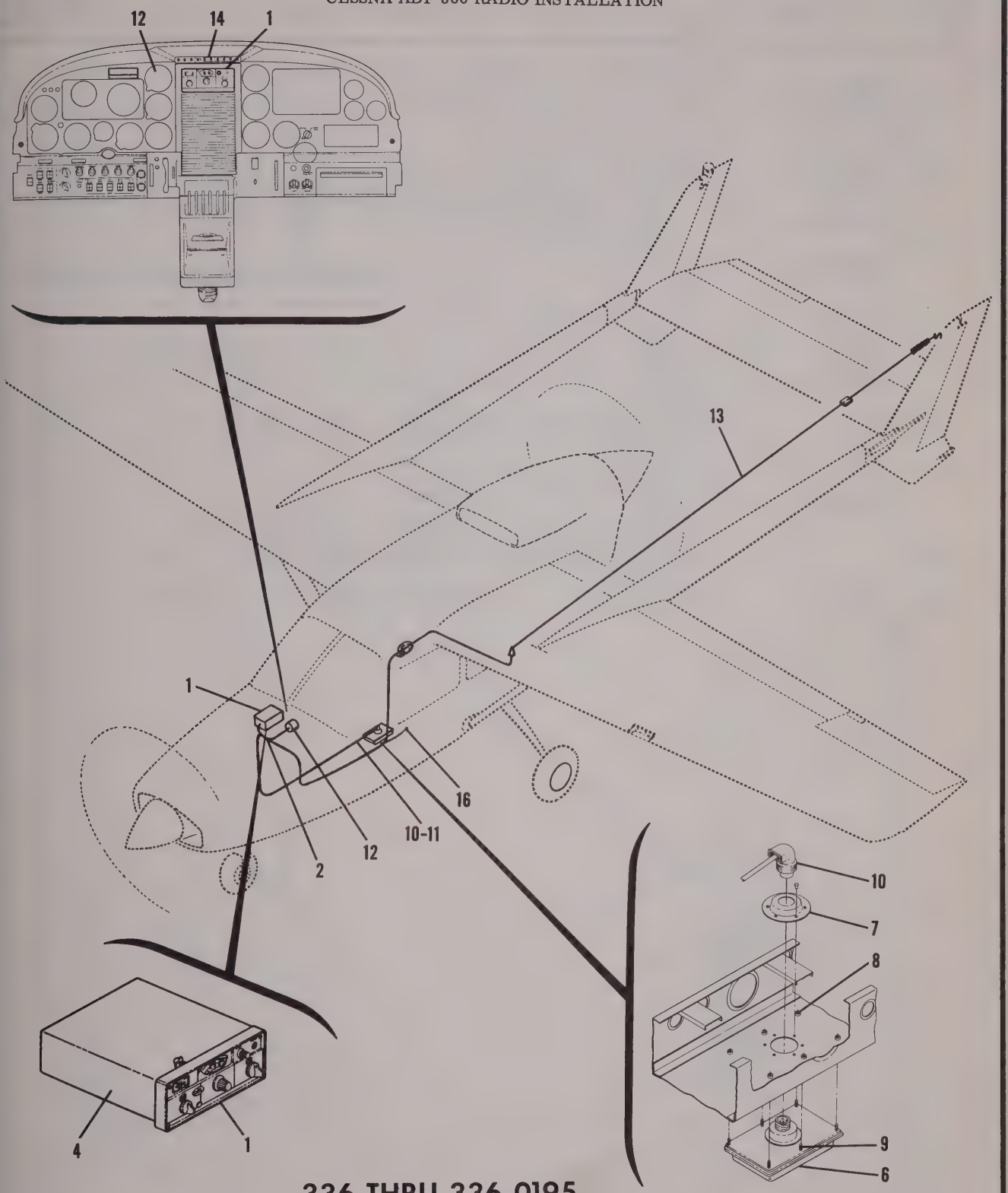


**336 THRU 336-0195**
**337 SERIAL 337-0001 & ON**

Figure 2-10. Cessna ADF 300 (Type 521B) Radio Installation - Sheet 6

| FIGURE AND INDEX NO. | PART NUMBER | DESCRIPTION<br>1 2 3 4 5 6 7 | UNITS PER ASSY | USABLE ON CODE |
|---|---|---|---|---|
| 2-10- | | CESSNA ADF 300 - TYPE 521B - RADIO INSTALLATION---------- | N/P | |
| - 1 | 28340-1500 | RECEIVER WITHOUT BFO ---------- | A/R | |
| - 2 | 32802-1128 | CABLE ASSY - WITHOUT MOUNTING - SENSE ANT LEAD - --------- | A/R | |
| | 32800-1128 | 28 VOLT SYSTEM ONLY---------- | A/R | |
| - 3 | 32800-1014 | CABLE ASSY - WITHOUT MOUNTING - SENSE ANT LEAD - --------- | A/R | |
| | | 14 VOLT SYSTEM ONLY | | |
| - 4 | 32802-1028 | MOUNTING & CABLE ASSY 28 VOLT SYSTEM ---------- | A/R | |
| - 5 | 32802-1014 | MOUNTING & CABLE ASSY-----14 VOLT SYSTEM---------- | A/R | |
| | 126-806 | RECEPTACLE - ATTACHED TO RECEIVER-----AMBE ---------- | 1 | |
| | 126-810 | PLUG - RECEIVER END OF IND CABLE AMBE ---------- | 1 | |
| | 32805-0002 | PLUG-IND END OF IND CABLE ---------- | 1 | |
| | | ATTACHING PARTS | | |
| | S1022Z6-6 | SCREW ---------- | 4 | |
| | NAS446-2-3 | NUT ---------- | 4 | |
| | | ---*--- | | |
| - 6 | 32880-1100 | LOOP ANTENNA WHEN EXHAUSTED USE 32880-01000 ---------- | 1 | |
| | | ATTACHING PARTS | | |
| - 7 | 1511005-1 | SHIELD---------- | 1 | |
| - 8 | A6K75 | RIVNUT---------- | 6 | |
| | AN936A6 | WASHER-----336 & 337 ONLY ---------- | 6 | |
| - 9 | AN515-6R12 | SCREW ---------- | 6 | |
| | | ---*--- | | |
| - 10 | 32803 | CABLE ASSY-LOOP ANT TO INDICATOR 336 & 337 ONLY ---- | 1 | |
| - 11 | 33827 | CABLE ASSY-LOOP ANT TO INDICATOR ALL MODELS --------- | 1 | |
| | | EXCEPT 336 & 337 | | |
| - 12 | 32680-0000 | INDICATOR - TYPE IN-521B ---------- | 1 | |
| | | ATTACHING PARTS | | |
| | AN515B6R12 | SCREW ---------- | 4 | |
| | | ---*--- | | |
| | | RADIO NOISE FILTER INSTALLATIONS SEE FIGURE 10-5 ---- | 1 | |
| - 13 | | ADF SENSE ANTENNA INSTALLATION-----SEE FIGURE 8-6 --------- | 1 | |
| - 14 | | TRANSMITTER SELECTOR SWITCH INSTALLATION-----SEE --------- | A/R | |
| | | FIGURE 9-1 | | |
| - 15 | S1360-5 | CIRCUIT BREAKER ALL MODELS EXCEPT 336 & 337 --------- | 1 | |
| - 16 | S1360-2 | CIRCUIT BREAKER 336 & 337 ONLY ---------- | 1 | |

CESSNA TRANSCEIVER 300 RADIO INSTALLATION

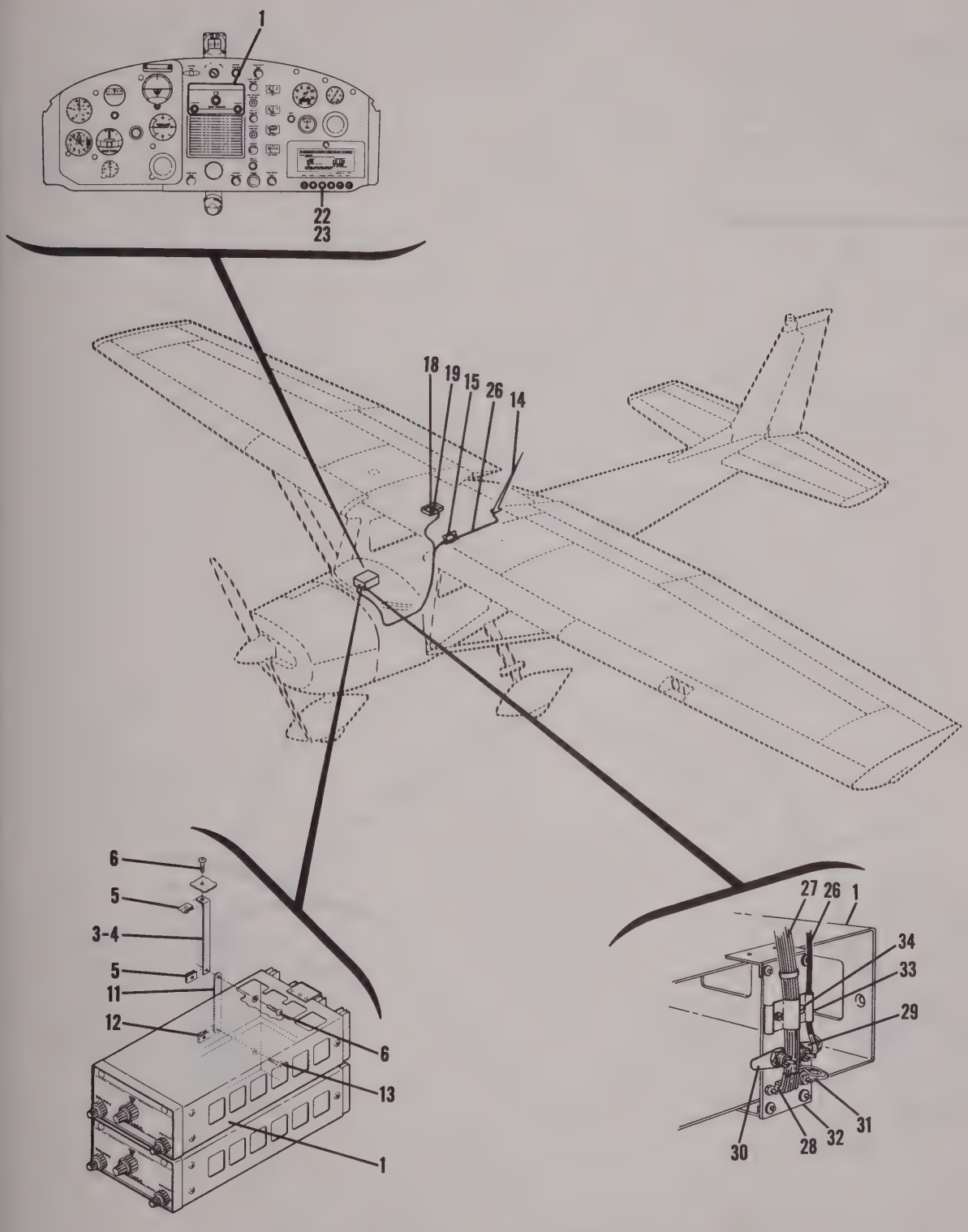


## 150 SERIAL 15061533 & ON

Figure 2-11. Cessna Transceiver 300 (Type 524A) Radio Installation - Sheet 1

CESSNA TRANSCEIVER 300 RADIO INSTALLATION

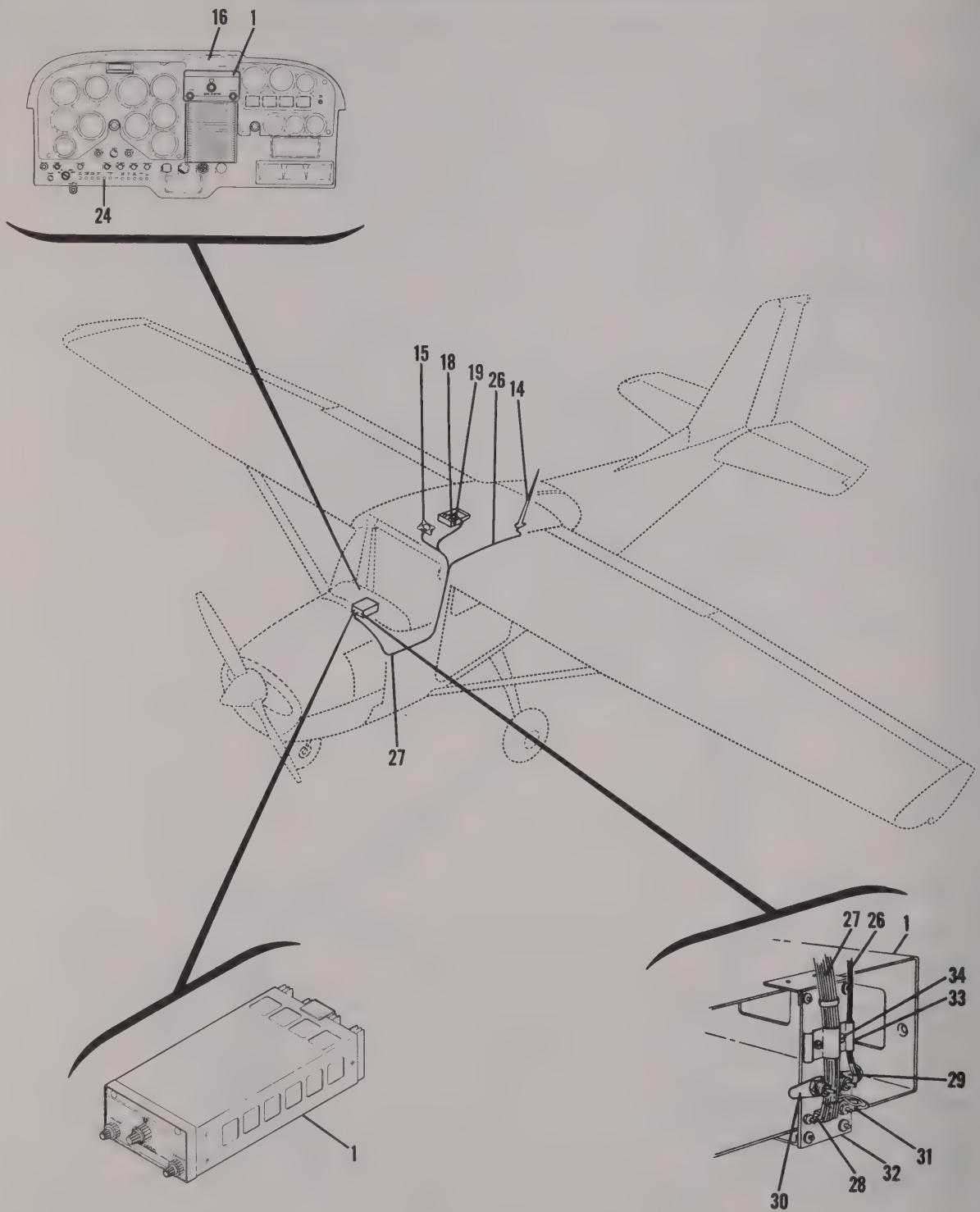


## 172 SERIAL 17253393 & ON

Figure 2-11. Cessna Transceiver 300 (Type 524A) Radio Installation - Sheet 2

CESSNA TRANSCEIVER 300 RADIO INSTALLATION

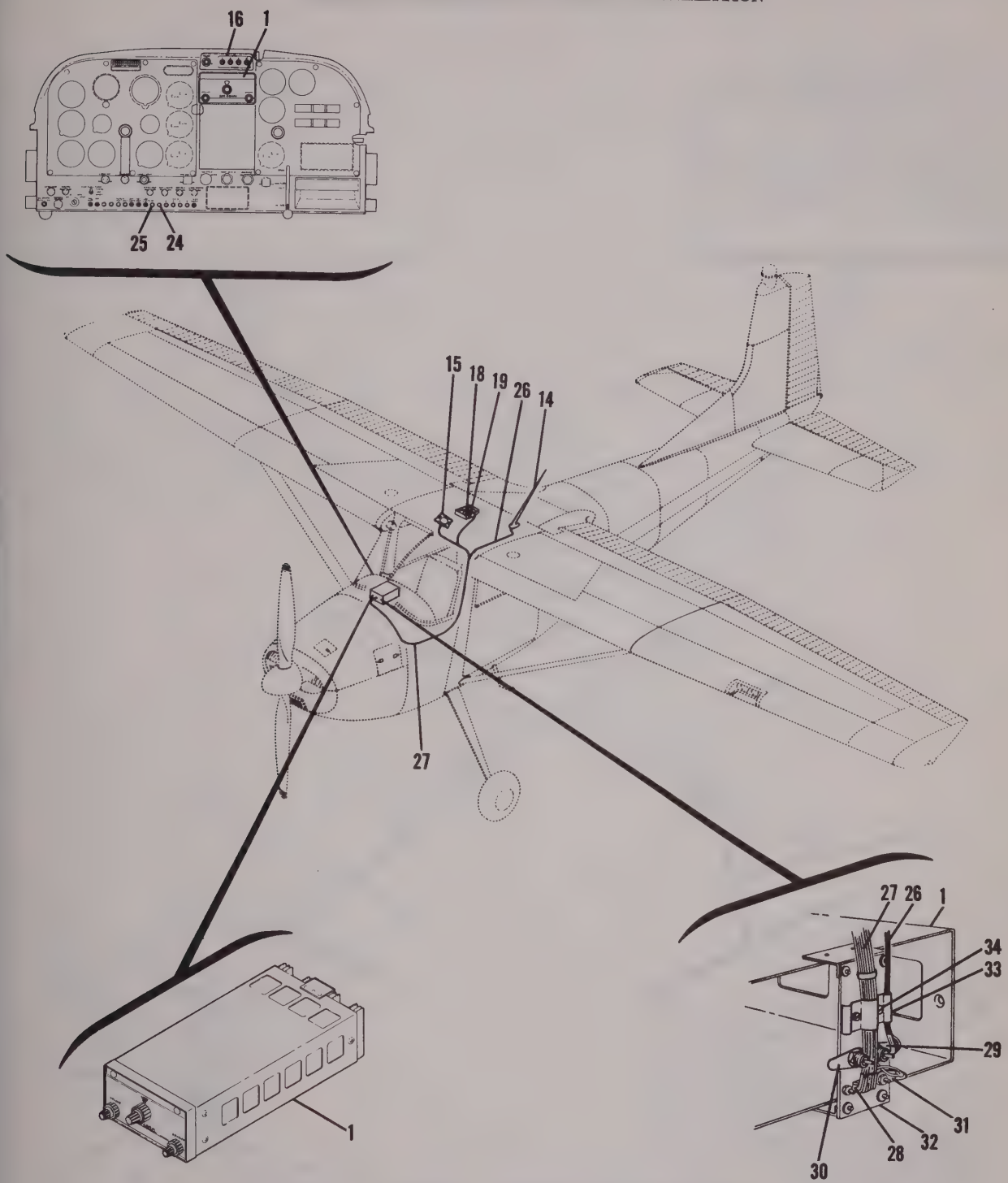


**180 SERIAL 18051608 & ON**
**185 SERIAL 185-0968 & ON**

Figure 2-11. Cessna Transceiver 300 (Type 524A) Radio Installation - Sheet 3

CESSNA TRANSCEIVER 300 RADIO INSTALLATION

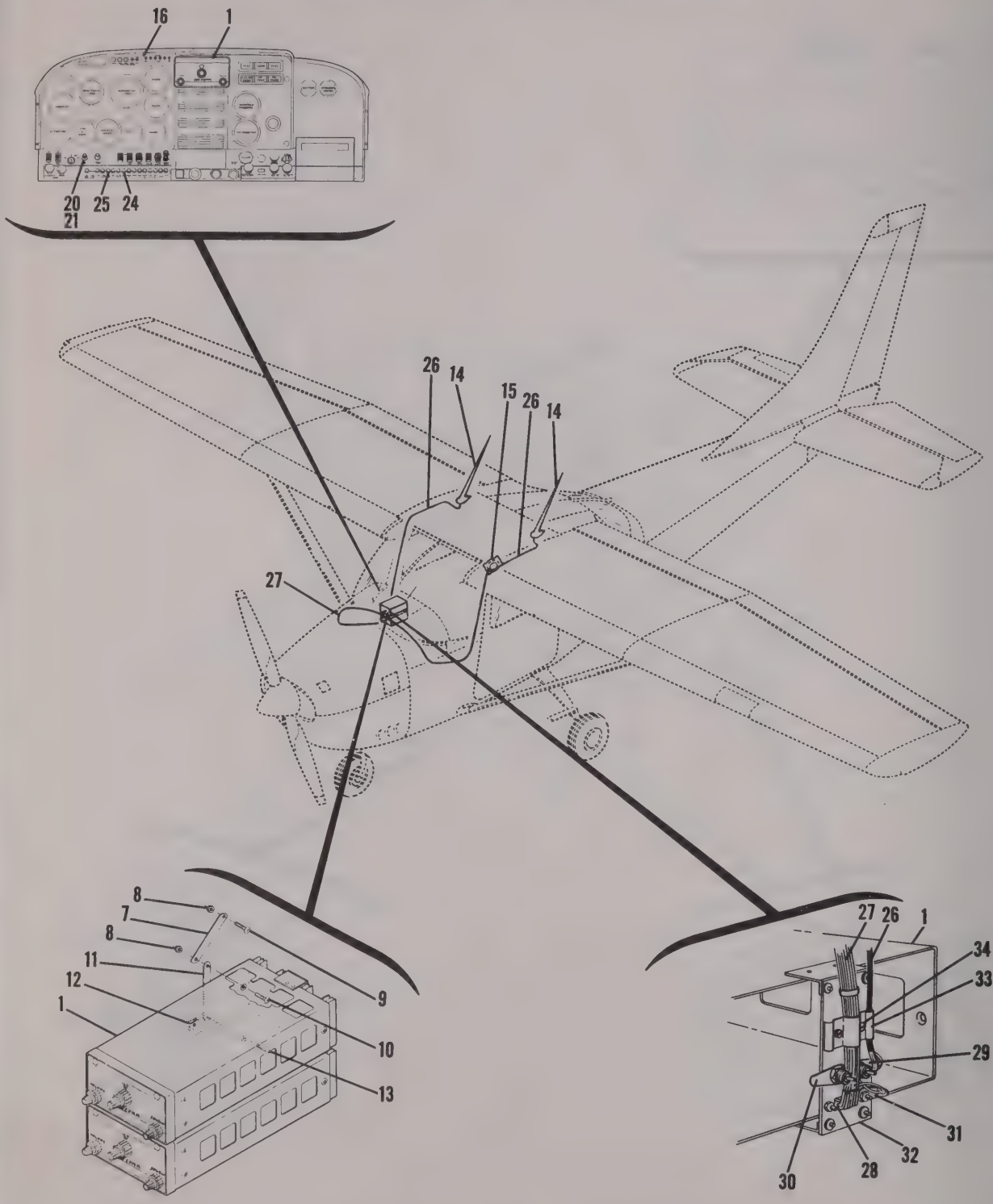


## 182 SERIAL 18256685 & ON

Figure 2-11. Cessna Transceiver 300 (Type 524A) Radio Installation - Sheet 4

CESSNA TRANSCEIVER 300 RADIO INSTALLATION

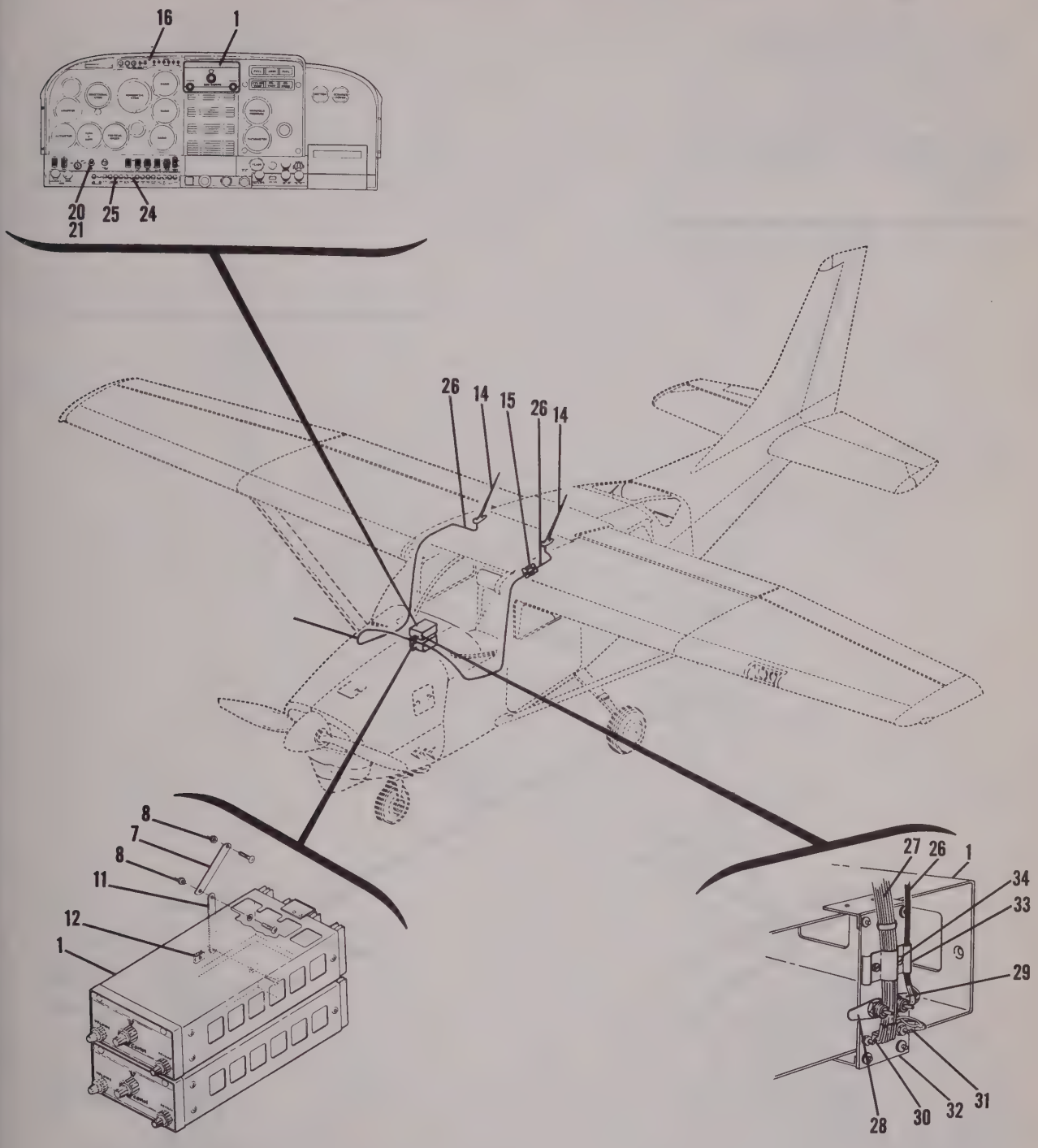


**P206 SERIAL P206-0161 & ON**
**U206 SERIAL U206-0438 & ON**
**TP206 SERIAL TP206-0161 & ON**
**TU206 SERIAL TU206-0438 & ON**

Figure 2-11. Cessna Transceiver 300 (Type 524A) Radio Installation - Sheet 5

CESSNA TRANSCEIVER 300 RADIO INSTALLATION

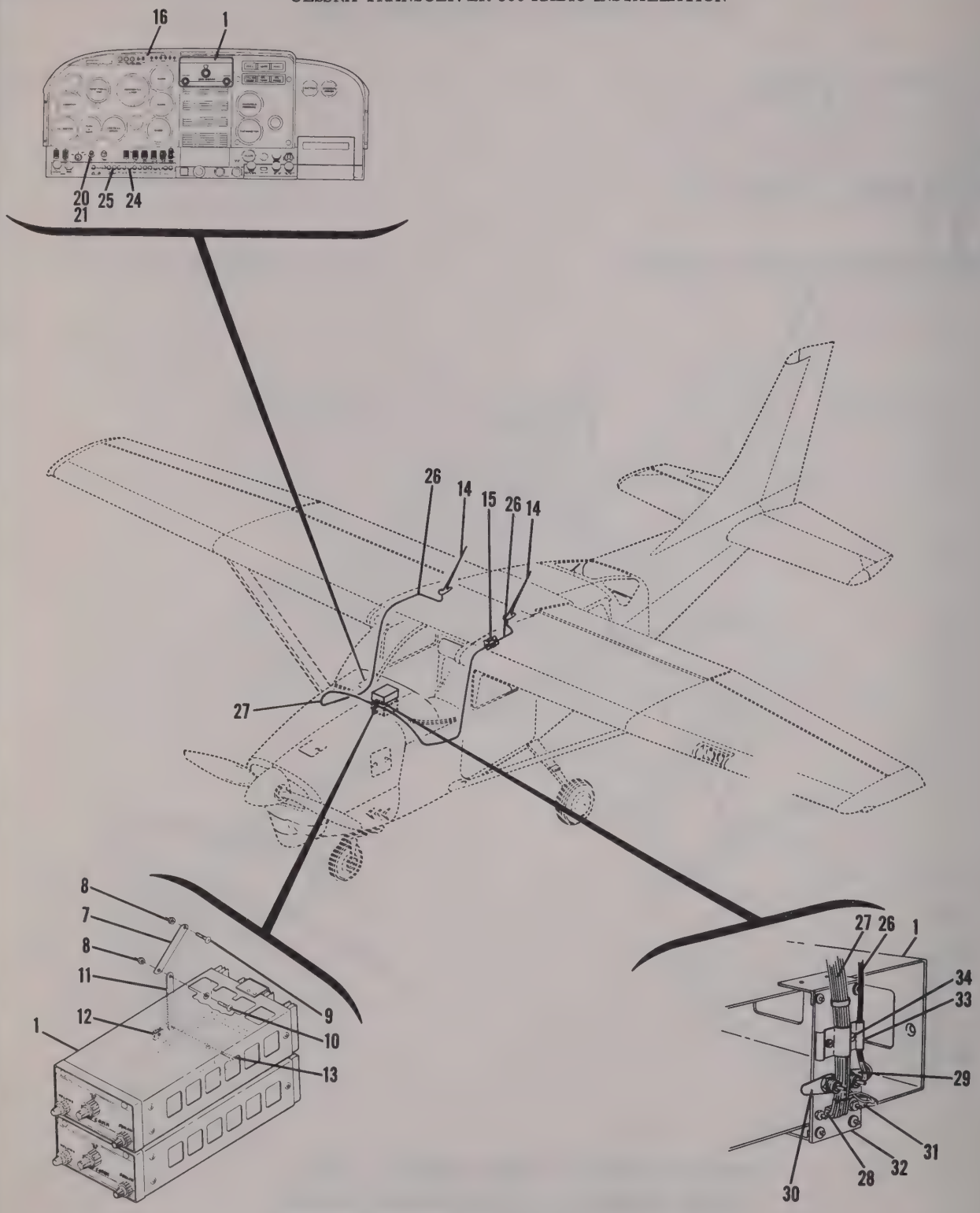


**210 SERIAL 21058711 & ON**
**T210 SERIAL T210-0001 & ON**

Figure 2-11. Cessna Transceiver 300 (Type 524A) Radio Installation - Sheet 6

CESSNA TRANSCEIVER 300 RADIO INSTALLATION

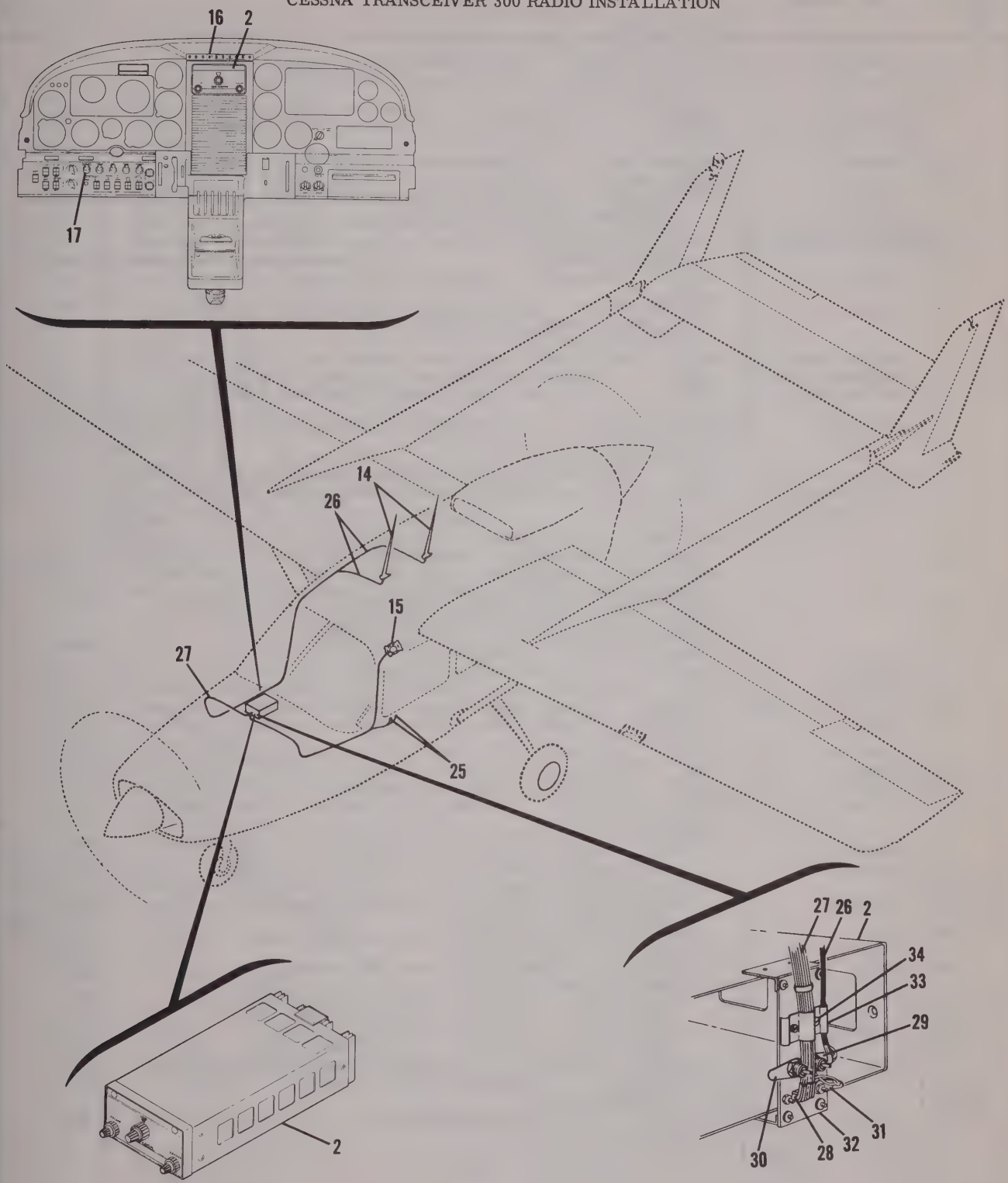


## 337 SERIAL 337-0240 & ON

Figure 2-11. Cessna Transceiver 300 (Type 524A) Radio Installation - Sheet 7

| FIGURE AND INDEX NO. | PART NUMBER | DESCRIPTION<br>1 2 3 4 5 6 7 | UNITS PER ASSY | USABLE ON CODE |
|---|---|---|---|---|
| 2-11- | | CESSNA TRANSCEIVER 300 - TYPE 524A ---------- | N/P | |
| - 1 | 31390-1114 | VHF TRANSCEIVER - TYPE RT-524A-----ALL MODELS EXCEPT 337 | 1 | |
| - 2 | 31390-1128 | VHF TRANSCEIVER - TYPE RT-524A-----337 ONLY ---------- | 1 | |
| | | ATTACHING PARTS | | |
| | S1022Z6-6 | SCREW ---------- | 4 | |
| | NAS446-2-3 | NUT ---------- | 4 | |
| | | ---*--- | | |
| - 3 | 0413403-1 | SUPPORT ASSY USED WHEN ONLY ONE RADIO IS INSTALLED ---- | A/R | |
| | | 150 ONLY | | |
| - 4 | 0413403-3 | SUPPORT ASSY USED WHEN MORE THAN ONE RADIO IS INSTALLED | 1 | |
| | | - REPLACES 0413403-1 150 ONLY | | |
| | 0413403-4 | SUPPORT 150 ONLY ---------- | 1 | |
| - 5 | NAS395-16-3 | NUT 150 ONLY ---------- | 2 | |
| | | ATTACHING PARTS | | |
| - 6 | S1022Z8-8 | SCREW 150 ONLY ---------- | 2 | |
| | | ---*--- | | |
| - 7 | 1270465-4 | SUPPORT STRAP USED WHEN ONLY ONE RADIO IS INSTALLED---- | A/R | |
| | | 182, P206, TP206, U206, TU206, 210 & T210 ONLY | | |
| | | ATTACHING PARTS | | |
| - 8 | MS20365-632C | NUT 182, P206, TP206, U206, TU206, 210 & T210 ONLY ---- | 2 | |
| - 9 | AN515-6R6 | SCREW 182, P206, TP206, U206, TU206, 210 & T210 ONLY | 1 | |
| - 10 | AN507-632R6 | SCREW 182, P206, TP206, U206, TU206, 210 & T210 ONLY | 1 | |
| | | ---*--- | | |
| - 11 | 1270465-3 | SUPPORT STRAP 150, 182, P206, TP206, U206, TU206, 210 | 1 | |
| | | & T210 ONLY | | |
| | | ATTACHING PARTS | | |
| - 12 | NAS395-16-3 | NUT 150, 182, P206, TP206, U206, TU206, 210 & T210 ONLY | 1 | |
| - 13 | S1022Z8-8 | SCREW 150, 182, P206, TP206, U206, TU206, 210 --------- | 1 | |
| | | & T210 ONLY | | |
| | | ---*--- | | |
| - 14 | | VHF ANTENNA INSTALLATION SEE FIGURE 8-1 ---------- | 1 | |
| - 15 | | SPEAKER INSTALLATION SEE FIGURE 9-3 ---------- | 1 | |
| | | MICROPHONE INSTALLATION SEE FIGURE 9-4 ---------- | 1 | |
| | | HEADSET INSTALLATION SEE FIGURE 9-5 ---------- | 1 | |
| - 16 | | TRANSMITTER & AUDIO SELECTOR SWITCHES SEE FIGURE 9-1 | 1 | |
| | | RADIO COOLING INSTALLATION---- SEE FIGURE 10-1 --------- | 1 | |
| - 17 | | DROPPING RESISTOR - FLT INST & RADIO DIAL LT SEE ---- | A/R | |
| | | FIGURE 10-2 337 ONLY | | |
| - 18 | 0413126-5 | RHEOSTAT 150, 172, 180 & 185 ONLY ---------- | 1 | |
| - 19 | S1390-3 | KNOB 150, 172, 180 & 185 ONLY ---------- | 1 | |
| - 20 | R-12 1/2-75-RS34 | RHEOSTAT 182, P206, TP206, U206, TU206, 210 & T210 ONLY | 1 | |
| - 21 | S1163-2 | KNOB ASSY 182, P206, TP206, U206, TU206, 210 --------- | 1 | |
| | | & T210 ONLY | | |
| - 22 | S1091-15 | FUSE 150 ONLY ---------- | 1 | |
| - 23 | S1090-13 | CAP 150 ONLY---------- | 1 | |
| - 24 | S1360-15 | CIRCUIT BREAKER ALL MODELS EXCEPT 150 & 337 --------- | 1 | |
| - 25 | S1360-5 | CIRCUIT BREAKER TWO REQD ON 337 MODELS ALL MODELS | 1 | |
| | | EXCEPT 150 & 172 | | |
| - 26 | | CABLE ASSY - TRANSCEIVER TO VHF ANTENNA ---------- | N/P | |
| | RG-58A/U | COAXIAL CABLE - BULK ITEM ---------- | A/R | |
| - 80 | UG-913/U | PLUG - COAXIAL - RT ANGLE CONNECTS TO ANTENNA ---- | 1 | |
| - 27 | | CABLE ASSY - MAIN CABLE ASSY ---------- | N/P | |
| - 28 | 29747-0018 | CONNECTOR-----CONNECTS TO REAR RECEIVER PLATE --------- | REF | |
| | | SUPPLIED WITH RECEIVER | | |
| - 29 | 29753 | CONNECTOR-----CONNECTS TO REAR RECEIVER PLATE --------- | REF | |
| | | SUPPLIED WITH RECEIVER | | |
| - 30 | 29752 | CONNECTOR-----CONNECTS TO REAR RECEIVER PLATE --------- | REF | |
| | | SUPPLIED WITH RECEIVER | | |
| - 31 | 1488-4 | TERMINAL LUG CONNECTS TO 29747-0018 CONNECTOR ---- | REF | |
| | | SUPPLIED WITH RECEIVER | | |
| - 32 | 31398 | PLATE - REAR CONNECTS TO REAR OF RECEIVER --------- | REF | |
| | | SUPPLIED WITH RECEIVER | | |
| - 33 | 31396 | CLIP-----ATTACHES CABLE ASSEMBLY TO 31398 REAR PLATE ON | REF | |
| | | RECEIVER SUPPLIED WITH RECEIVER | | |
| | | ATTACHING PARTS | | |
| - 34 | 338-4032 | SCREW SUPPLIED WITH RECEIVER ---------- | REF | |
| | | ---*--- | | |

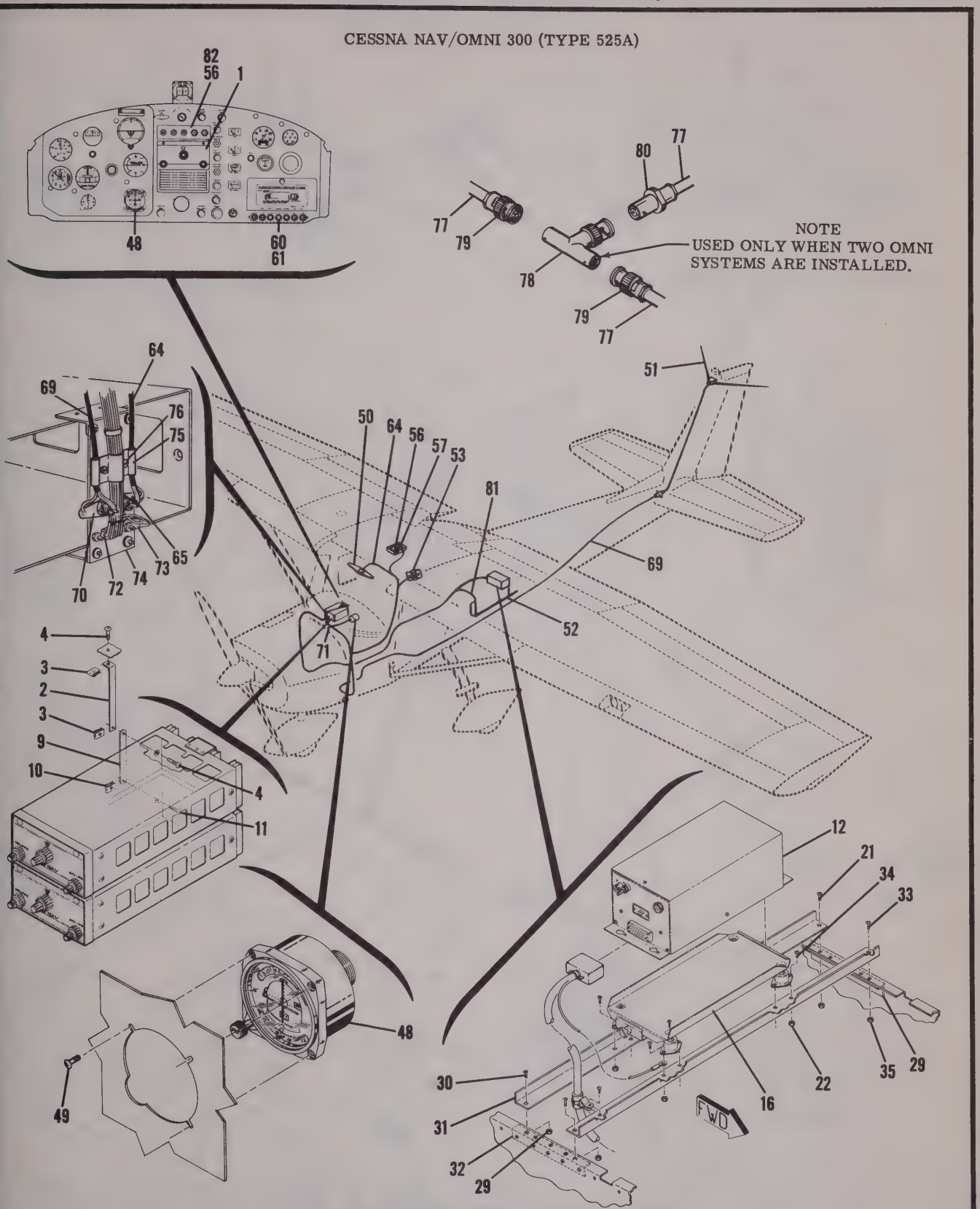


**150 SERIAL 15061533 & ON**

Figure 2-12. Cessna Nav/Omni 300 (Type 525A) Sheet 1

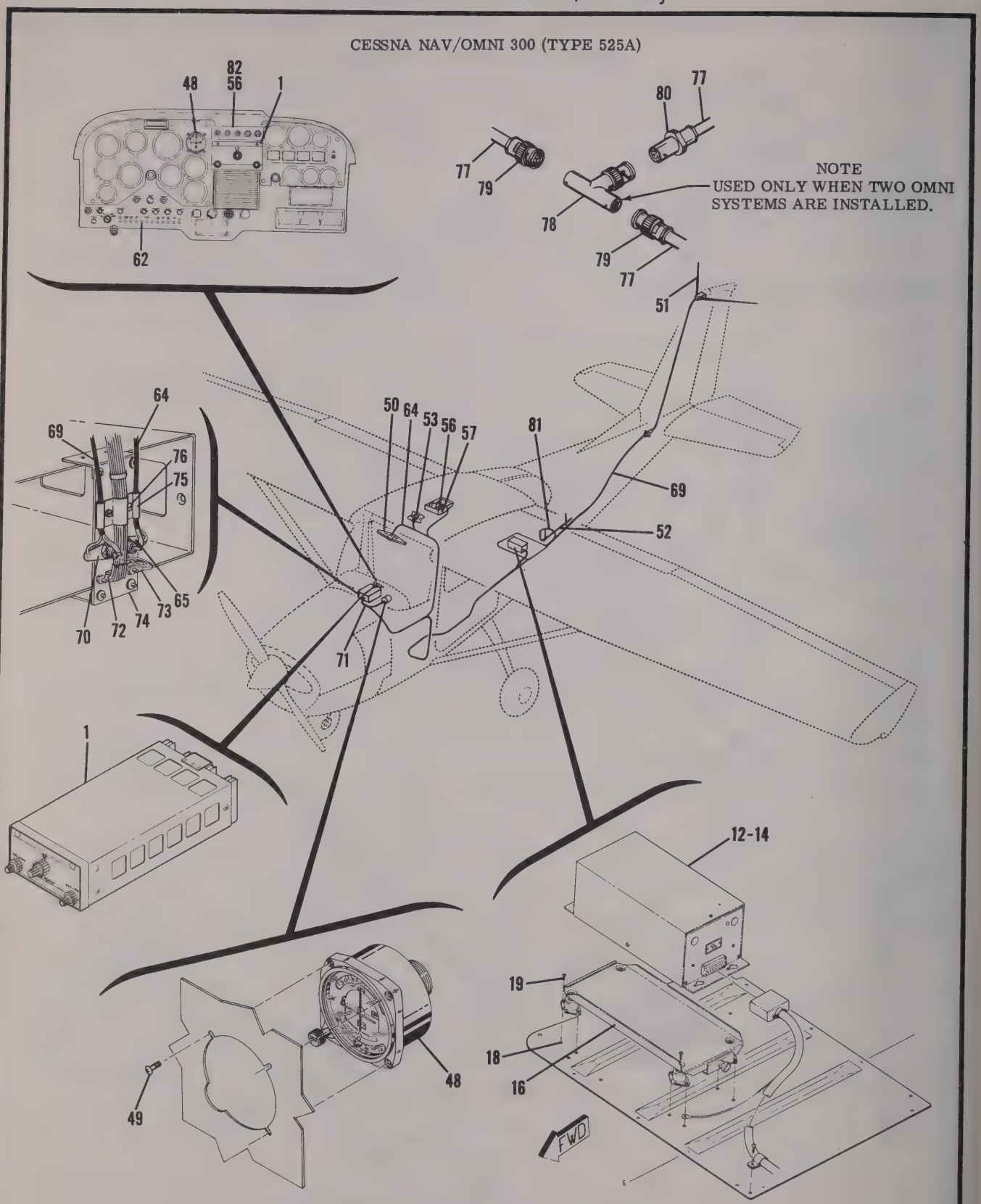


Figure 2-12. Cessna Nav/Omni 300 (Type 525A) Sheet 2

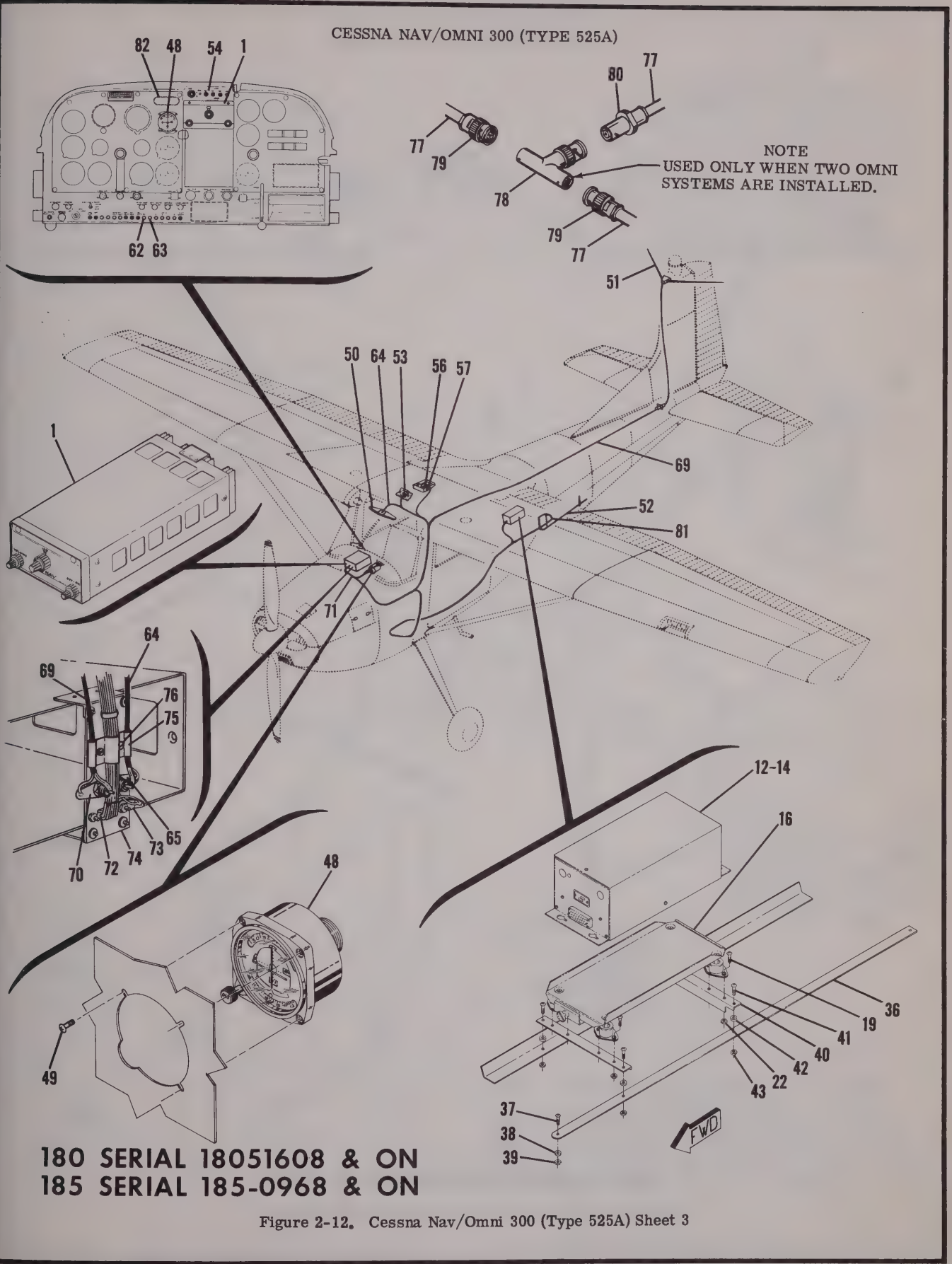


Figure 2-12. Cessna Nav/Omni 300 (Type 525A) Sheet 3

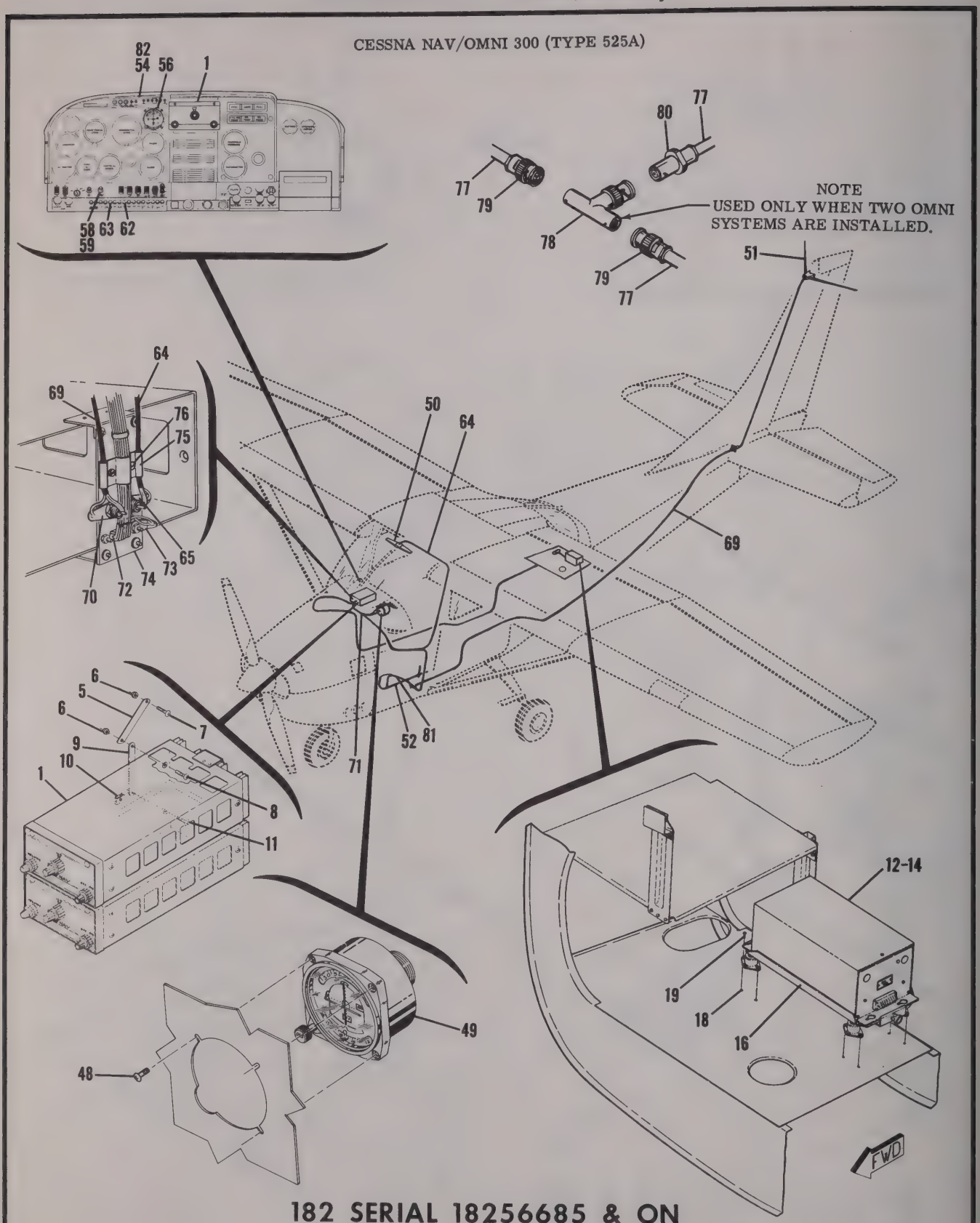


Figure 2-12. Cessna Nav/Omni 300 (Type 525A) Sheet 4

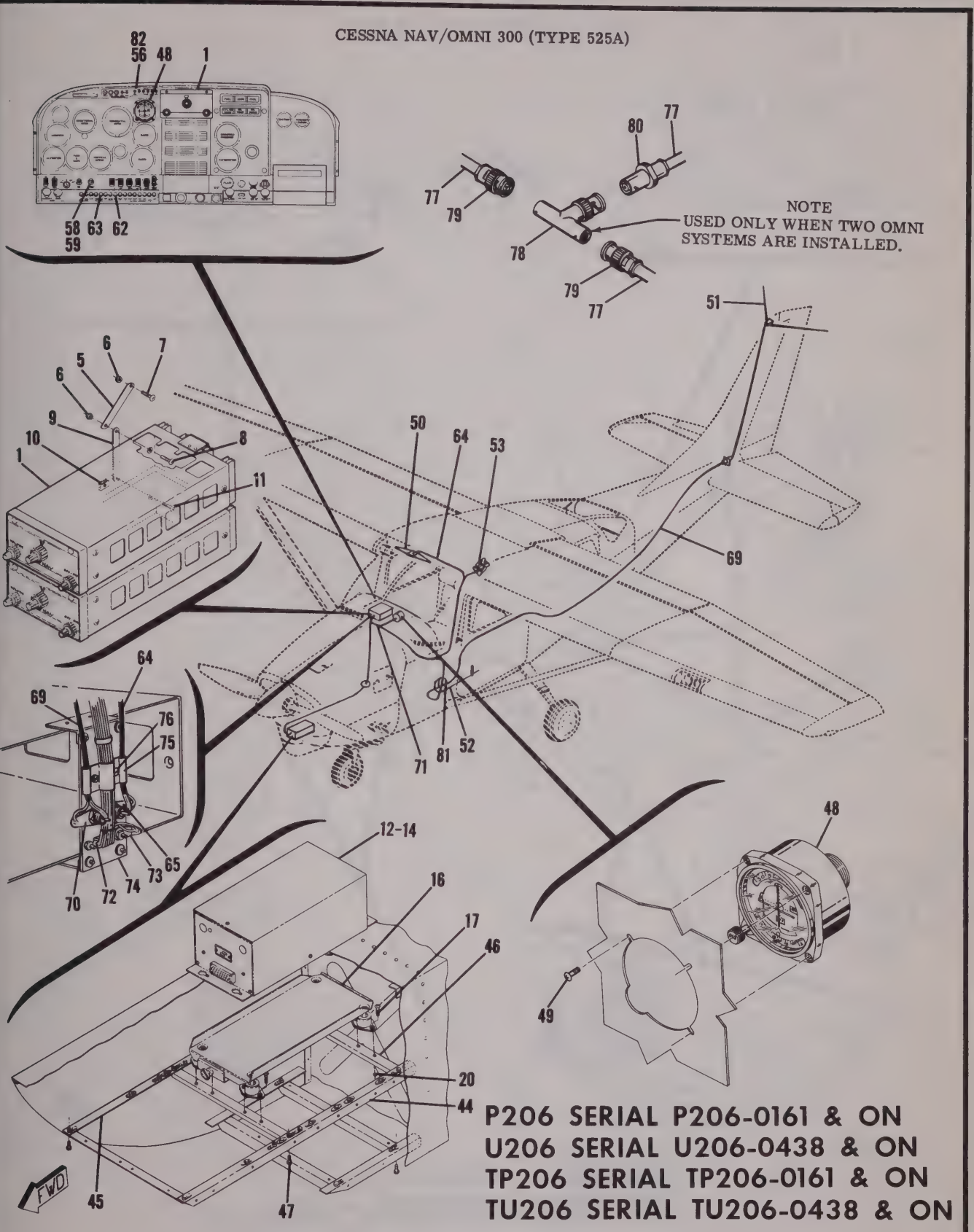


Figure 2-12. Cessna Nav/Omni 300 (Type 525A) Sheet 5

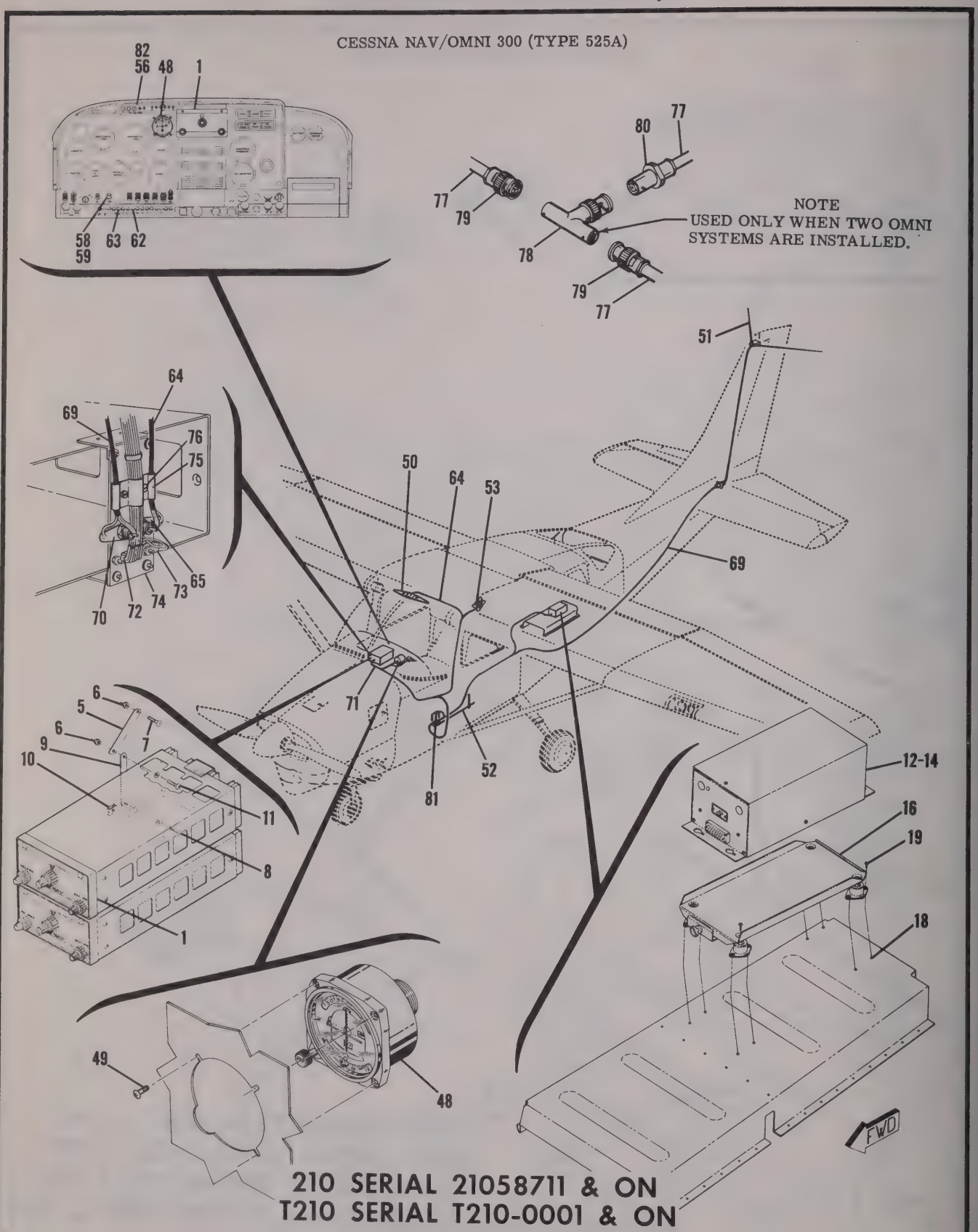


Figure 2-12. Cessna Nav/Omni 300 (Type 525A) Sheet 6

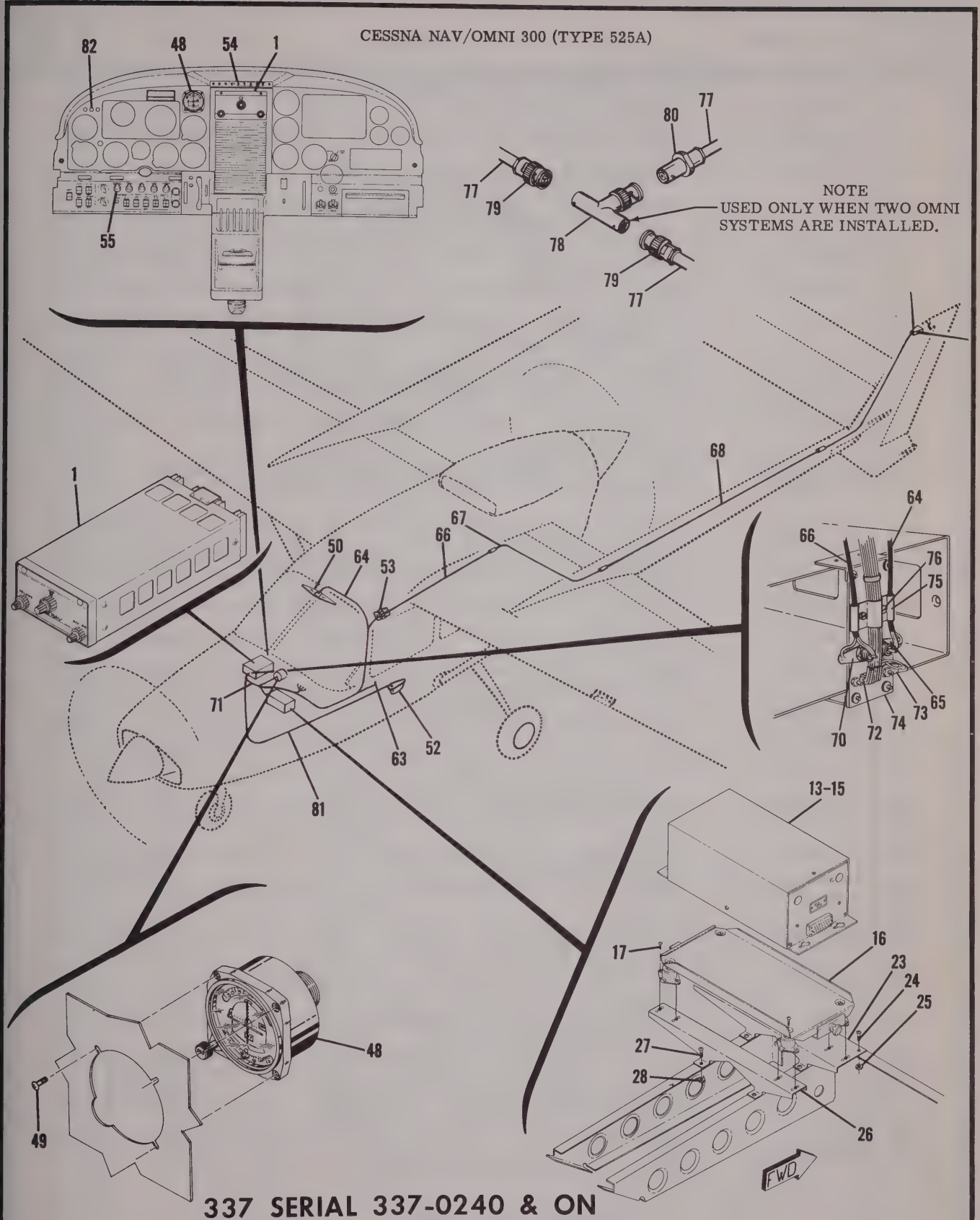


Figure 2-12. Cessna Nav/Omni 300 (Type 525A) Sheet 7

| FIGURE AND INDEX NO. | PART NUMBER | DESCRIPTION<br>1 2 3 4 5 6 7 | UNITS PER ASSY | USABLE ON CODE |
|---|---|---|---|---|
| 2-12- | | CESSNA NAV/OMNI 300 WITH MARKER BEACON INSTALLATION ---- | N/P | |
| - 1 | 31380-1000 | RECEIVER - TYPE R-525A-10 ---------- | 1 | |
| | | ATTACHING PARTS | | |
| | S1022Z6-6 | SCREW ---------- | 4 | |
| | NAS446-2-3 | NUT ---------- | 4 | |
| | | ---*--- | | |
| | 0413403-1 | SUPPORT ASSY USED WHEN ONLY ONE RADIO IS INSTALLED ---- | A/R | |
| | | 150 ONLY | | |
| - 2 | 0413403-3 | SUPPORT ASSY USED WHEN MORE THAN ONE RADIO IS INSTALLED | 1 | |
| | | - REPLACES 0413403-1 150 ONLY | | |
| | 0413403-4 | SUPPORT 150 ONLY ---------- | 1 | |
| - 3 | NAS395-16-3 | NUT 150 ONLY ---------- | 2 | |
| | | ATTACHING PARTS | | |
| - 4 | S1022Z8-8 | SCREW 150 ONLY ---------- | 2 | |
| | | ---*--- | | |
| - 5 | 1270465-4 | SUPPORT STRAP USED WHEN ONLY ONE RADIO IS INSTALLED---- | A/R | |
| | | 182, P206, TP206, U206, TU206, 210 & T210 ONLY | | |
| | | ATTACHING PARTS | | |
| - 6 | MS20365-632C | NUT 182, P206, TP206, U206, TU206, 210 & T210 ONLY ---- | 2 | |
| - 7 | AN515-6R6 | SCREW 182, P206, TP206, U206, TU206, 210 & T210 ONLY | 1 | |
| - 8 | AN507-632R6 | SCREW 182, P206, TP206, U206, TU206, 210 & T210 ONLY | 1 | |
| | | ---*--- | | |
| - 9 | 1270465-3 | SUPPORT STRAP 150, 182, P206, TP206, U206, TU206, ---- | 1 | |
| | | 210 & T210 ONLY | | |
| | | ATTACHING PARTS | | |
| - 10 | NAS395-16-3 | NUT 150, 182, P206, TP206, U206, TU206, 210 & T210 ONLY | 1 | |
| - 11 | S1022Z8-8 | SCREW 150, 182, P206, TP206, U206, TU206, 210 --------- | 1 | |
| | | & T210 ONLY | | |
| | | ---*--- | | |
| - 12 | 32980-0014 | ACCESSORY UNIT - WITH HI-LO SENSETIVITY MKR BCN ALL---- | A/R | |
| | | MODELS EXCEPT 337 | | |
| - 13 | 32980-0028 | ACCESSORY UNIT - WITH HI-LO SENSETIVITY MKR BCN 337 ONLY | A/R | |
| - 14 | 32880-0014 | ACCESSORY UNIT - WITHOUT HI-LO SENSETIVITY MKR BCN-----ALL | A/R | |
| | | MODELS EXCEPT 150 & 337 | | |
| - 15 | 32880-0028 | ACCESSORY UNIT - WITHOUT HI-LO SENSETIVITY MKR BCN--------- | A/R | |
| | | 337 ONLY | | |
| - 16 | 30740 | MOUNTING TYPE M-515A ---------- | 1 | |
| | | ATTACHING PARTS | | |
| - 17 | AN515-8R8 | SCREW P206, TP206, U206, TU206 & 337 ONLY---------- | 8 | |
| - 18 | A6K75 | RIVNUT-----172, 182, 210 & T210 ONLY ---------- | 8 | |
| - 19 | AN515-6R16 | SCREW 172, 180, 182, 185, 210 & T210 ONLY---------- | 8 | |
| - 20 | MS20365-832C | NUT P206, TP206, U206 & TU206 ONLY ---------- | 8 | |
| - 21 | AN515-6R8 | SCREW 150 ONLY ---------- | 8 | |
| - 22 | MS20365-632C | NUT 150, 180 & 185 ONLY ---------- | 8 | |
| | | ---*--- | | |
| - 23 | 1513642-1 | SUPPORT ASSY 337 ONLY ---------- | 1 | |
| | | ATTACHING PARTS | | |
| - 24 | AN515-8R8 | SCREW ---------- | 5 | |
| - 25 | MS20365-832C | NUT ---------- | 5 | |
| | | ---*--- | | |
| - 26 | 1513643-1 | SUPPORT ASSY 337 ONLY ---------- | 1 | |
| | | ATTACHING PARTS | | |
| - 27 | AN515-8R8 | SCREW ---------- | 4 | |
| - 28 | MS20365-832C | NUT ---------- | 4 | |
| | | ---*--- | | |
| - 29 | 0412011-1 | STIFFENER 150 ONLY ---------- | 2 | |
| - 30 | 0411547-1 | SUPPORT - RADIO RACK 150 ONLY ---------- | 1 | |
| | | ATTACHING PARTS | | |
| - 31 | AN515-8R8 | SCREW ---------- | 2 | |
| - 32 | MS20365-832C | NUT ---------- | 2 | |
| | | ---*--- | | |
| - 33 | 0411547-2 | SUPPORT - RADIO RACK 150 ONLY ---------- | 1 | |
| | | ATTACHING PARTS | | |
| - 34 | AN515-8R8 | SCREW ---------- | 2 | |
| - 35 | MS20365-832C | NUT ---------- | 2 | |
| | | ---*--- | | |
| - 36 | 0770049-1 | ANGLE 180 & 185 ONLY ---------- | 1 | |
| | | ATTACHING PARTS | | |
| - 37 | AN515-8R10 | SCREW ---------- | 2 | |
| - 38 | S355 | SPACER---------- | 2 | |
| - 39 | MS20365-832C | NUT ---------- | 2 | |
| | | ---*--- | | |

CONTINUED ON NEXT PAGE

| FIGURE AND INDEX NO. | PART NUMBER | DESCRIPTION 1 2 3 4 5 6 7 | UNITS PER ASSY | USABLE ON CODE |
|---|---|---|---|---|
| 2-12- 40 | 0770713-1 | ANGLE 180 & 185 ONLY | 2 | |
| | | ATTACHING PARTS | | |
| - 41 | AN515-8R10 | SCREW | 4 | |
| - 42 | S355 | SPACER | 4 | |
| - 43 | MS20365-832C | NUT | 4 | |
| | | ---*--- | | |
| - 44 | 1270627-85 | SIDE ANGLE ASSY - LH SIDE - STD EQUIPMENT | REF | |
| | | P206, TP206, U206 & TU206 ONLY | | |
| - 45 | 1270627-86 | SIDE ANGLE ASSY - RH SIDE - STD EQUIPMENT | REF | |
| | | P206, TP206, U206 & TU206 ONLY | | |
| - 46 | 1270627-75 | ATTACH ANGLE | 2 | |
| | | ATTACHING PARTS | | |
| - 47 | AN520-10R6 | SCREW | 4 | |
| | | ---*--- | | |
| - 48 | 32350 | INDICATOR TYPE IN-525A | 1 | |
| | | ATTACHING PARTS | | |
| - 49 | AN515B6R10 | SCREW | 3 | |
| | NAS487-20 | NUT | 3 | |
| | | ---*--- | | |
| - 50 | | GLIDE SLOPE ANTENNA INSTALLATION SEE FIGURE 8-3 | 1 | |
| - 51 | | OMNI ANTENNA INSTALLATION ---SEE FIGURE 8-2 | 1 | |
| - 52 | | MARKER BEACON ANTENNA INSTALLATION SEE FIGURE 8-4 | 1 | |
| - 53 | | SPEAKER INSTALLATION SEE FIGURE 9-3 | A/R | |
| | | MICROPHONE INSTALLATION SEE FIGURE 9-4 | A/R | |
| | | HEADSET INSTALLATION SEE FIGURE 9-5 | A/R | |
| - 54 | | TRANSMITTER & AUDIO SELECTOR SWITCHES SEE FIGURE 9-1 | A/R | |
| | | RADIO COOLING INSTALLATION--- SEE FIGURE 10-1 | A/R | |
| - 55 | | DROPPING RESISTOR - FLT INST & RADIO DIAL LT SEE FIGURE | A/R | |
| | | 10-2 337 ONLY | | |
| - 56 | 0413126-5 | RHEOSTAT 150, 172, 180 & 185 ONLY | 1 | |
| - 57 | S1390-3 | KNOB 150, 172, 180 & 185 ONLY | 1 | |
| - 58 | R-12 1/2-75-RS34 | RHEOSTAT 182, P206, TP206, U206, TU206, 210 & T210 | 1 | |
| - 59 | S1163-2 | KNOB ASSY 182, P206, TP206, U206, TU206, 210 & T210 | 1 | |
| - 60 | S1091-10 | FUSE 150 ONLY | 1 | |
| - 61 | S1090-12 | CAP 150 ONLY | 1 | |
| - 62 | S1360-10 | CIRCUIT BREAKER ALL MODELS EXCEPT 150 & 337 | 1 | |
| - 63 | S1360-5 | CIRCUIT BREAKER TWO REQD ON 337 MODELS ALL MODELS | 1 | |
| | | EXCEPT 150 & 172 | | |
| - 64 | | CABLE ASSY RECEIVER TO GLIDE SLOPE ANTENNA | N/P | |
| | RG-58A/U | COAXIAL CABLE - BULK ITEM | A/R | |
| - 65 | 29753 | CONNECTOR - CONNECTS TO REAR RECEIVER PLATE | REF | |
| | | SUPPLIED WITH RECEIVER | | |
| - 66 | | CABLE ASSY RECEIVER TO WING ROOT - OMNI CABLE | N/P | |
| | | 337 ONLY | | |
| | RG-58A/U | COAXIAL CABLE - BULK ITEM | A/R | |
| | 29752 | CONNECTOR - CONNECTS TO REAR RECEIVER PLATE | REF | |
| | | SUPPLIED WITH RECEIVER | | |
| | UG-88C/U | PLUG - COAXIAL - WING ROOT CONNECTION | 1 | |
| - 67 | | CABLE ASSY WING ROOT TO BOOM CONNECTION - OMNI CABLE | N/P | |
| | | 337 ONLY | | |
| | RG-58A/U | COAXIAL CABLE - BULK ITEM | A/R | |
| | UG-89/U | JACK - COAXIAL-----WING ROOT END | 1 | |
| | UG-88C/U | PLUG - COAXIAL-----BOOM CONNECTION END | 1 | |
| - 68 | | CABLE ASSY BOOM CONNECTION TO BALUN STUB - OMNI CABLE | N/P | |
| | | 337 ONLY | | |
| | RG-58A/U | COAXIAL CABLE - BULK ITEM | A/R | |
| | UG-89/U | JACK - COAXIAL-----BOOM CONNECTION END | 1 | |
| | UG-88C/U | PLUG - COAXIAL-----BALUN STUB END | 1 | |
| - 69 | | CABLE ASSY RECEIVER TO OMNI ANTENNA ALL MODELS | N/P | |
| | | EXCEPT 337 | | |
| | RG-58A/U | COAXIAL CABLE - BULK ITEM | A/R | |
| - 70 | 29752 | CONNECTOR-----CONNECTS TO REAR RECEIVER PLATE | REF | |
| | | SUPPLIED WITH RECEIVER | | |
| - 71 | | CABLE ASSY RECEIVER TO ACCESSORY UNIT & INDICATOR | N/P | |
| | MS3106A-20-27S | PLUG-----CONNECTS TO INDICATOR | 1 | |
| | MS3057-12A | CLAMP CONNECTS TO INDICATOR | 1 | |
| | 29747-0034 | CONNECTOR-----CONNECTS TO ACCESSORY UNIT | 1 | |
| - 72 | 29747-0018 | CONNECTOR-----CONNECTS TO REAR RECEIVER PLATE | REF | |
| | | SUPPLIED WITH RECEIVER | | |

CONTINUED ON NEXT PAGE

| FIGURE AND INDEX NO. | PART NUMBER | DESCRIPTION<br>1 2 3 4 5 6 7 | UNITS PER ASSY | USABLE ON CODE |
|---|---|---|---|---|
| 2-12- 73 | 1488-4 | TERMINAL LUG CONNECTS TO 29747-0018 CONNECTOR ----<br>SUPPLIED WITH RECEIVER | REF | |
| - 74 | 31398 | PLATE - REAR CONNECTS TO REAR OF RECEIVER ---------<br>SUPPLIED WITH RECEIVER | REF | |
| - 75 | 31396 | CLIP-----ATTACHES CABLE ASSEMBLIES TO 31389 REAR PLATE ON<br>RECEIVER SUPPLIED WITH RECEIVER<br>ATTACHING PARTS | REF | |
| - 76 | 338-4032 | SCREW SUPPLIED WITH RECEIVER ----------<br>---*--- | REF | |
| | | CABLE ASSY - OMNI ANTENNA CABLE TEE-----USED ONLY WHEN TWO<br>RECEIVERS ARE INSTALLED | N/P | |
| - 77 | RG-58A/U | COAXIAL CABLES-----RECEIVER TO TEE CONNECTOR LENGTHS ----<br>SHOULD BE 17 INCHES LONG | A/R | |
| - 78 | UG-274/U | TEE ADAPTER ---------- | 1 | |
| - 79 | UG-88C/U | PLUG-----CONNECTS TO 17 INCH LONG OMNI LEADS --------- | 2 | |
| - 80 | UG-89/U | JACK-----CONNECTS TO OMNI ANTENNA CABLE ---------- | 1 | |
| - 81 | | CABLE ASSY - ACCESSORY UNIT TO MARKER BEACON LIGHTS ---- | N/P | |
| | 28371-0007 | CONNECTOR-----CONNECTS TO ACCESSORY UNIT ---------- | 1 | |
| - 82 | | MARKER BEACON LIGHTS INSTALLATION SEE FIGURE 10-6 ---- | A/R | |
| | | CABLE ASSY - ACCESSORY UNIT TO MARKER BEACON ANTENNA ---- | N/P | |
| | | PLUG - COAXIAL-----TWO REQD ON 337 - CONNECTS TO--------<br>ACCESSORY UNIT | 1 | |

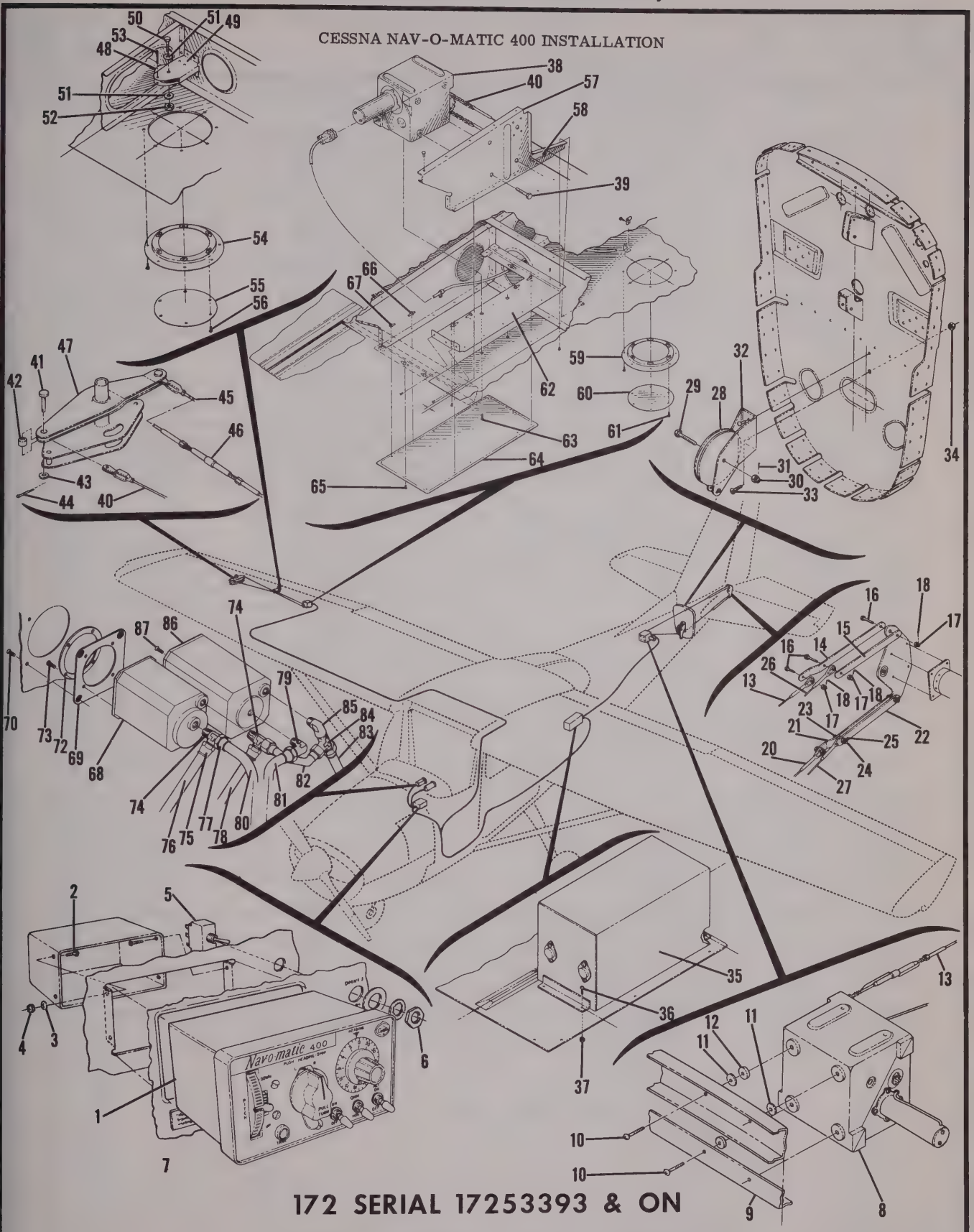


Figure 2-13. Cessna Nav-O-Matic 400 Installation

| FIGURE AND INDEX NO. | PART NUMBER | DESCRIPTION<br>1 2 3 4 5 6 7 | UNITS PER ASSY | USABLE ON CODE |
|---|---|---|---|---|
| 2-13- | | CESSNA NAV-O-MATIC 400 INSTALLATION 172 ONLY | N/P | |
| - 1 | 30510-1114 | CONTROLLER AMPLIFIER ARC | 1 | |
| | | ATTACHING PARTS | | |
| - 2 | AN507-632R6 | SCREW | 4 | |
| - 3 | AN960-6 | WASHER | 4 | |
| - 4 | MS20365-632C | NUT | 4 | |
| | | ---*--- | | |
| - 5 | S392-3 | SWITCH - USED WITH DUAL OMNI ONLY | 1 | |
| | | ATTACHING PARTS | | |
| - 6 | S1216-4 | NUT | 1 | |
| | | ---*--- | | |
| - 7 | 0713750-10 | PLACARD ASSY | 1 | |
| - 8 | 26360-0000 | ACTUATOR ARC | 1 | |
| | | ATTACHING PARTS | | |
| - 9 | 0513355-1 | ANGLE | 1 | |
| - 10 | AN520-10R10 | SCREW | 4 | |
| - 11 | AN960-10 | WASHER | 2 | |
| - 12 | S355-1 | SPACER | 2 | |
| | | ---*--- | | |
| - 13 | 0560007-4 | CABLE ASSY | 1 | |
| | | ATTACHING PARTS | | |
| - 14 | 0533133-2 | LINK | 1 | |
| - 15 | 0533133-1 | LINK | 1 | |
| - 16 | AN23-12 | BOLT | 3 | |
| - 17 | AN310-3 | NUT | 3 | |
| - 18 | MS24665-134 | PIN | 3 | |
| - 19 | | NOT USED | | |
| | | ---*--- | | |
| - 20 | 0560007-1 | CHAIN & CABLE ASSY | 1 | |
| | | ATTACHING PARTS | | |
| - 21 | 0533133-2 | LINK | 1 | |
| - 22 | 0533133-1 | LINK | 1 | |
| - 23 | AN23-8 | BOLT | 3 | |
| - 24 | AN310-3 | NUT | 3 | |
| - 25 | MS24665-134 | PIN | 3 | |
| | | ---*--- | | |
| - 26 | 0510105-218 | CABLE ASSY | 1 | |
| - 27 | 0510105-219 | CABLE ASSY | 1 | |
| - 28 | S378-4 | PULLEY | 1 | |
| | | ATTACHING PARTS | | |
| - 29 | AN4-10A | BOLT | 1 | |
| - 30 | MS20365-428C | NUT | 1 | |
| - 31 | MS2466S-285 | COTTER PIN | 1 | |
| | | ---*--- | | |
| - 32 | 0513354-1 | PULLEY BRACKET | 1 | |
| | | ATTACHING PARTS | | |
| - 33 | AN520-10R10 | SCREW | 1 | |
| - 34 | MS20365-1032C | NUT | 1 | |
| | | ---*--- | | |
| - 35 | 30520-0014 | COMPUTER AMPLIFIER ARC | 1 | |
| | | ATTACHING PARTS | | |
| - 36 | AN515-8R8 | SCREW | 4 | |
| - 37 | MS20365-832C | NUT | 4 | |
| | | ---*--- | | |
| - 38 | 26360-0000 | ACTUATOR | 1 | |
| | | ATTACHING PARTS | | |
| - 39 | AN3-4A | BOLT | 4 | |
| | | ---*--- | | |
| - 40 | 1200182-1 | CHAIN & CABLE ASSY | 1 | |
| | | ATTACHING PARTS | | |
| - 41 | MS20392-2-9 | PIN | 1 | |
| - 42 | 1200182-9 | BUSHING | 1 | |
| - 43 | AN960-10L | WASHER | 1 | |
| - 44 | MS24665-134 | COTTER PIN | 1 | |
| | | ---*--- | | |

CONTINUED ON NEXT PAGE

| FIGURE AND INDEX NO. | PART NUMBER | DESCRIPTION<br>1 2 3 4 5 6 7 | UNITS PER ASSY | USABLE ON CODE |
|---|---|---|---|---|
| 2-13- 45 | 1200182-2 | CABLE ASSY | 1 | |
| | | ATTACHING PARTS | | |
| | MS20392-2-9 | PIN | 1 | |
| | 1200182-9 | BUSHING | 1 | |
| | AN960-10L | WASHER | 1 | |
| | MS24665-134 | COTTER PIN | 1 | |
| - 46 | AN155-168 | BARREL | 1 | |
| | | ---*--- | | |
| - 47 | 1200180-1 | BELLCRANK ASSY | 1 | |
| - 48 | S378-3L | PULLEY | 1 | |
| | | ATTACHING PARTS | | |
| - 49 | 1200183-1 | BRACKET | 1 | |
| - 50 | AN4-10A | BOLT | 1 | |
| - 51 | AN960-416L | WASHER | 2 | |
| - 52 | MS20365-428C | NUT | 1 | |
| - 53 | MS20365-132 | COTTER PIN | 1 | |
| | | ---*--- | | |
| - 54 | S226-5F | DOUBLER | 1 | |
| - 55 | S225-4F | COVER | 1 | |
| | | ATTACHING PARTS | | |
| - 56 | S1022F8-8 | SCREW | 6 | |
| | | ---*--- | | |
| - 57 | 1200167-1 | RIB ASSEMBLY | 1 | |
| - 58 | S1050-1-3.90 | GROMMET BULK ITEM - 3.90 INCHES REQD | A/R | |
| - 59 | S226-5F | DOUBLER | 1 | |
| - 60 | S225-4F | COVER | 1 | |
| | | ATTACHING PARTS | | |
| - 61 | S1022Z8-8 | SCREW | 6 | |
| | | ---*--- | | |
| - 62 | 1200169-1 | DOUBLER ASSY | 1 | |
| - 63 | AN525-10R9 | SCREW | 2 | |
| - 64 | 1200168-1 | COVER | 1 | |
| | | ATTACHING PARTS | | |
| - 65 | AN525-832R7 | SCREW | 14 | |
| | | ---*--- | | |
| - 66 | NAS697A08 | NUTPLATE | 6 | |
| - 67 | NAS696A08 | NUTPLATE | 3 | |
| | S1360-10 | CIRCUIT BREAKER | 1 | |
| - 68 | 30475-0000 | GYRO - HORIZON | 1 | |
| | | ATTACHING PARTS | | |
| - 69 | 0713749-6 | PLATE | 1 | |
| - 70 | AN507-1032R5 | SCREW | 4 | |
| - 71 | | NOT USED | | |
| - 72 | 2104 | RING | 1 | |
| - 73 | AN515-6R14 | SCREW | 4 | |
| | | ---*--- | | |
| - 74 | S1521-1 | TEE | 2 | |
| - 75 | S1497-4 | FITTING - HOSE END | 1 | |
| - 76 | S1495-4 | HOSE 33 IN LG BULK ITEM REF S1495-4-33.00 | A/R | |
| - 77 | S1497-6 | FITTING - HOSE END | 8 | |
| - 78 | S1495-4 | HOSE 27.50 IN LG BULK ITEM REF S1495-4-27.50 | A/R | |
| - 79 | AN823-6D | ELBOW | 2 | |
| - 80 | S1495-6 | HOSE 10.00 IN LG BULK ITEM REF S1495-6-10.00 | A/R | |
| - 81 | S1495-6 | HOSE 12.50 IN LG BULK ITEM REF S1495-6-12.50 | A/R | |
| - 82 | 0500118-37 | LINE ASSEMBLY | 1 | |
| - 83 | S1495-6 | HOSE 16.50 IN LG BULK ITEM REF S1495-6-16.50 | A/R | |
| - 84 | AN826-6D | TEE | 1 | |
| - 85 | AN914-2D | ELBOW | 1 | |
| - 86 | 30370-0100 | DIRECTIONAL GYRO | 1 | |
| | | ATTACHING PARTS | | |
| - 87 | AN507-632R10 | SCREW | 3 | |
| | | ---*--- | | |

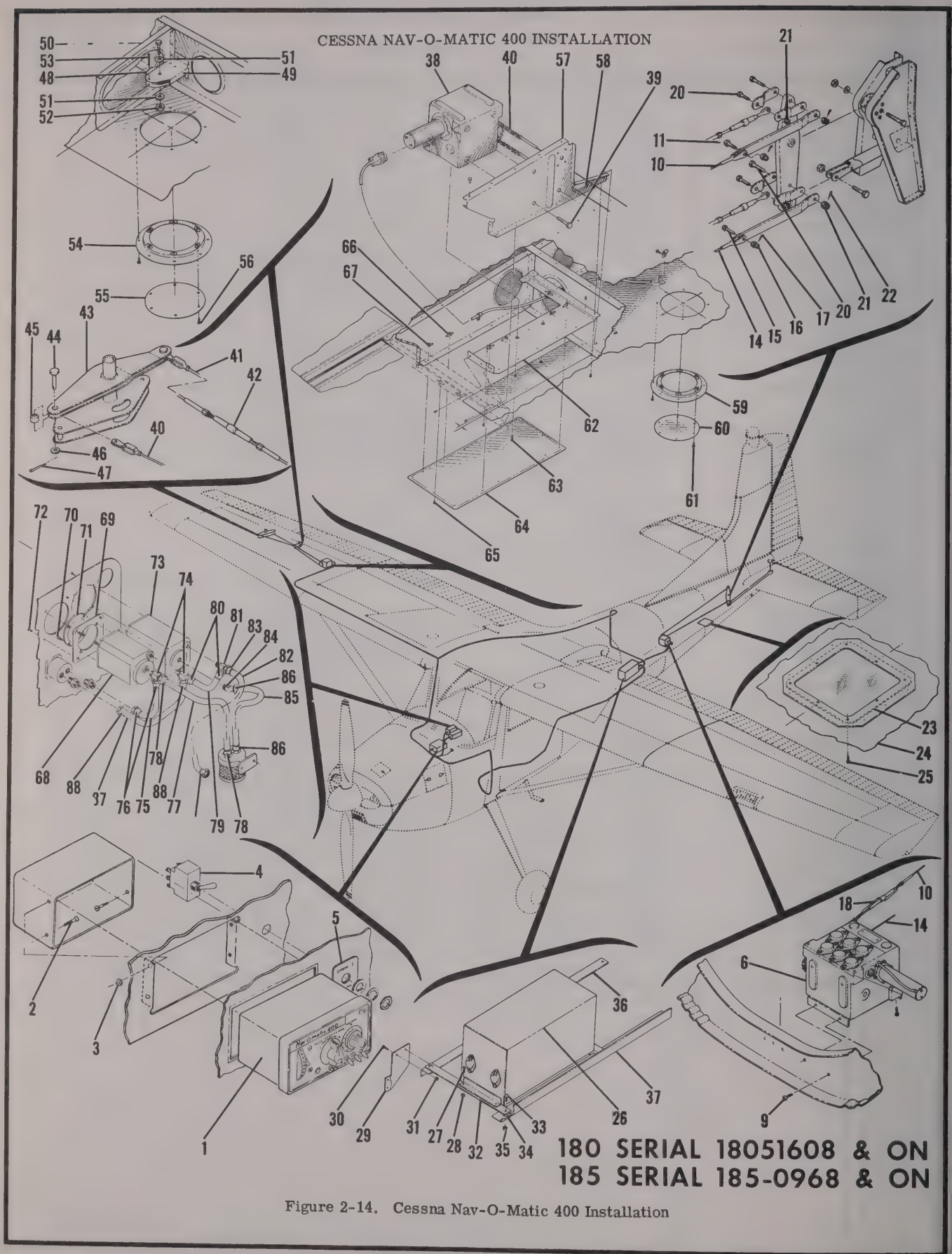


Figure 2-14. Cessna Nav-O-Matic 400 Installation

| FIGURE AND INDEX NO. | PART NUMBER | DESCRIPTION 1 2 3 4 5 6 7 | UNITS PER ASSY | USABLE ON CODE |
|---|---|---|---|---|
| 2-14- | | CESSNA NAV-O-MATIC 400 INSTALLATION 180 & 185 ONLY ---- | N/P | |
| - 1 | 30510-1114 | CONTROLLER AMPLIFIER ARC ---------- | 1 | |
| | | ATTACHING PARTS | | |
| - 2 | AN507-632R8 | SCREW ---------- | 4 | |
| - 3 | MS20365-632C | NUT ---------- | 4 | |
| | | ---*--- | | |
| - 4 | S392-3 | SWITCH - USED WITH DUAL OMNI ONLY ---------- | 1 | |
| - 5 | 0700145-1 | PLACARD ASSY ---------- | 1 | |
| | 0713750-8 | PLACARD - NAV-O-MATIC LIMITATIONS - NOT SHOWN---------- | 1 | |
| | | MOUNTED OUTSIDE NEAR TOP OF GLOVE BOX DOOR | | |
| - 6 | 26360-0000 | ACTUATOR ARC---------- | 1 | |
| | | ATTACHING PARTS | | |
| - 7 | AN520-10R8 | SCREW ---------- | 4 | |
| | | ---*--- | | |
| - 8 | 0770088-2 | BRACKET ASSY ---------- | 1 | |
| | | ATTACHING PARTS | | |
| - 9 | AN520-8R8 | SCREW ---------- | 4 | |
| | | ---*--- | | |
| - 10 | 0760004-4 | CABLE ASSY ---------- | 1 | |
| | | ATTACHING PARTS | | |
| - 11 | AN23-10 | BOLT ---------- | 1 | |
| - 12 | AN310-3 | NUT ---------- | 1 | |
| - 13 | MS24665 | PIN ---------- | 1 | |
| | | ---*--- | | |
| - 14 | 0760004-1 | CHAIN & CABLE ASSY ---------- | 1 | |
| | | ATTACHING PARTS | | |
| - 15 | AN23-10 | BOLT ---------- | 1 | |
| - 16 | AN310-3 | NUT ---------- | 1 | |
| - 17 | MS24665 | PIN ---------- | 1 | |
| - 18 | AN155-16S | BARREL---------- | 1 | |
| | | ---*--- | | |
| - 19 | 0760003-1 | LINK ---------- | 2 | |
| | | ATTACHING PARTS | | |
| - 20 | AN24-14 | BOLT ---------- | 2 | |
| - 21 | AN310-4 | NUT ---------- | 2 | |
| - 22 | MS24665-134 | COTTER PIN ---------- | 2 | |
| | | ---*--- | | |
| - 23 | 0712017-2 | DOUBLER ASSY ---------- | 1 | |
| - 24 | 0712017-1 | PLATE ---------- | 1 | |
| | | ATTACHING PARTS | | |
| - 25 | S1021Z8-8 | SCREW ---------- | 8 | |
| | | ---*--- | | |
| - 26 | 30520-0014 | COMPUTER ---------- | 1 | |
| | | ATTACHING PARTS | | |
| - 27 | AN515-8R8 | SCREW ---------- | 4 | |
| - 28 | MS20365-832C | NUT ---------- | 4 | |
| | | ---*--- | | |
| - 29 | 0770069-1 | BRACKET ---------- | 1 | |
| | | ATTACHING PARTS | | |
| - 30 | AN515-8R8 | SCREW ---------- | 2 | |
| - 31 | MS20365-832C | NUT ---------- | 2 | |
| | | ---*--- | | |
| - 32 | 0770713-1 | ANGLE ---------- | 2 | |
| | | ATTACHING PARTS | | |
| - 33 | AN515-8R8 | SCREW ---------- | 5 | |
| - 34 | S355 | SPACER---------- | 5 | |
| - 35 | MS20365-832C | NUT ---------- | 5 | |
| | | ---*--- | | |
| - 36 | 0770070-1 | ANGLE ---------- | 1 | |
| - 37 | 0770071-1 | ANGLE ---------- | 1 | |
| | S1360-10 | CIRCUIT BREAKER REQD WHEN MORE THAN ONE OMNI IS ---- | 1 | |
| | | INSTALLED | | |
| - 38 | 26360-0000 | ACTUATOR ---------- | 1 | |
| | | ATTACHING PARTS | | |
| - 39 | AN3-4A | BOLT ---------- | 4 | |
| | | ---*--- | | |

CONTINUED ON NEXT PAGE

| FIGURE AND INDEX NO. | PART NUMBER | DESCRIPTION<br>1 2 3 4 5 6 7 | UNITS PER ASSY | USABLE ON CODE |
|---|---|---|---|---|
| 2-14- 40 | 1200182-1 | CHAIN & CABLE ASSY | 1 | |
| - 41 | 1200182-2 | CABLE ASSY | 1 | |
| | | ATTACHING PARTS | | |
| | MS20392-2-9 | PIN | 1 | |
| | 1200182-9 | BUSHING | 1 | |
| | AN960-10L | WASHER | 1 | |
| | MS24665-134 | COTTER PIN | 1 | |
| - 42 | AN155-168 | BARREL | 1 | |
| | | ---*--- | | |
| - 43 | 1200180-1 | BELLCRANK ASSY | 1 | |
| | | ATTACHING PARTS | | |
| - 44 | MS20392-2-9 | PIN | 1 | |
| - 45 | 1200182-9 | BUSHING | 1 | |
| - 46 | AN960-10L | WASHER | 1 | |
| - 47 | MS24665-134 | COTTER PIN | 1 | |
| | | ---*--- | | |
| - 48 | S378-3L | PULLEY | 1 | |
| | | ATTACHING PARTS | | |
| - 49 | 1200183-1 | BRACKET | 1 | |
| - 50 | AN4-10A | BOLT | 1 | |
| - 51 | AN960-416L | WASHER | 2 | |
| - 52 | MS20365-428C | NUT | 1 | |
| - 53 | MS20365-132 | COTTER PIN | 1 | |
| | | ---*--- | | |
| - 54 | S226-5F | DOUBLER | 1 | |
| - 55 | S225-4F | COVER | 1 | |
| | | ATTACHING PARTS | | |
| - 56 | S1022F8-8 | SCREW | 6 | |
| | | ---*--- | | |
| - 57 | 1200167-1 | RIB ASSEMBLY | 1 | |
| - 58 | S1050-1-3.90 | GROMMET BULK ITEM - 3.90 INCHES REQD | A/R | |
| - 59 | S226-5F | DOUBLER | 1 | |
| - 60 | S225-4F | COVER | 1 | |
| | | ATTACHING PARTS | | |
| - 61 | S1022Z8-8 | SCREW | 6 | |
| | | ---*--- | | |
| - 62 | 1200169-1 | DOUBLER ASSY | 1 | |
| - 63 | AN525-10R9 | SCREW | 2 | |
| - 64 | 1200168-1 | COVER | 1 | |
| | | ATTACHING PARTS | | |
| - 65 | AN525-832R7 | SCREW | 14 | |
| | | ---*--- | | |
| - 66 | NAS697A08 | NUTPLATE | 6 | |
| - 67 | NAS696A08 | NUTPLATE | 3 | |
| - 68 | 30370-0100 | DIRECTIONAL GYRO | 1 | |
| | | ATTACHING PARTS | | |
| - 69 | 0713749-6 | PLATE | 1 | |
| - 70 | AN507-1032R6 | SCREW | 4 | |
| - 71 | 2104 | RING | 1 | |
| - 72 | AN515-6R12 | SCREW | 4 | |
| | | ---*--- | | |
| - 73 | 30370-0100 | GYRO - HORIZON | 1 | |
| - 74 | S1521-1 | TEE | 2 | |
| - 75 | S1495-6 | HOSE 10.50 IN LG BULK ITEM REF S1495-6-10.50 | A/R | |
| - 76 | S1497-6 | FITTING - HOSE END | 2 | |
| - 77 | S1495-4 | HOSE 12.00 IN LG BULK ITEM REF S1495-4-12.00 | A/R | |
| - 78 | S1497-4 | FITTING - HOSE END | 2 | |
| - 79 | S1495-6 | HOSE 5.50 IN LG BULK ITEM REF S1495-6-5.50 | A/R | |
| - 80 | S1497-6 | FITTING - HOSE END | 2 | |
| - 81 | AN826-6D | TEE | 1 | |
| - 82 | S1615-6 | HOSE 10.00 IN LG BULK ITEM REF S1615-6-10.00 | A/R | |
| - 83 | S1497-6 | FITTING - HOSE END | 1 | |
| - 84 | AN816-6D | NIPPLE | 1 | |
| - 85 | S1495-6 | HOSE 13.50 IN LG BULK ITEM REF S1495-6-13.50 | A/R | |
| - 86 | S1497-6 | FITTING - HOSE END | 2 | |
| - 87 | S1495-4 | HOSE 9.50 IN LG BULK ITEM REF S1495-4-9.50 | A/R | |
| - 88 | S1497-4 | FITTING - HOSE END | 2 | |

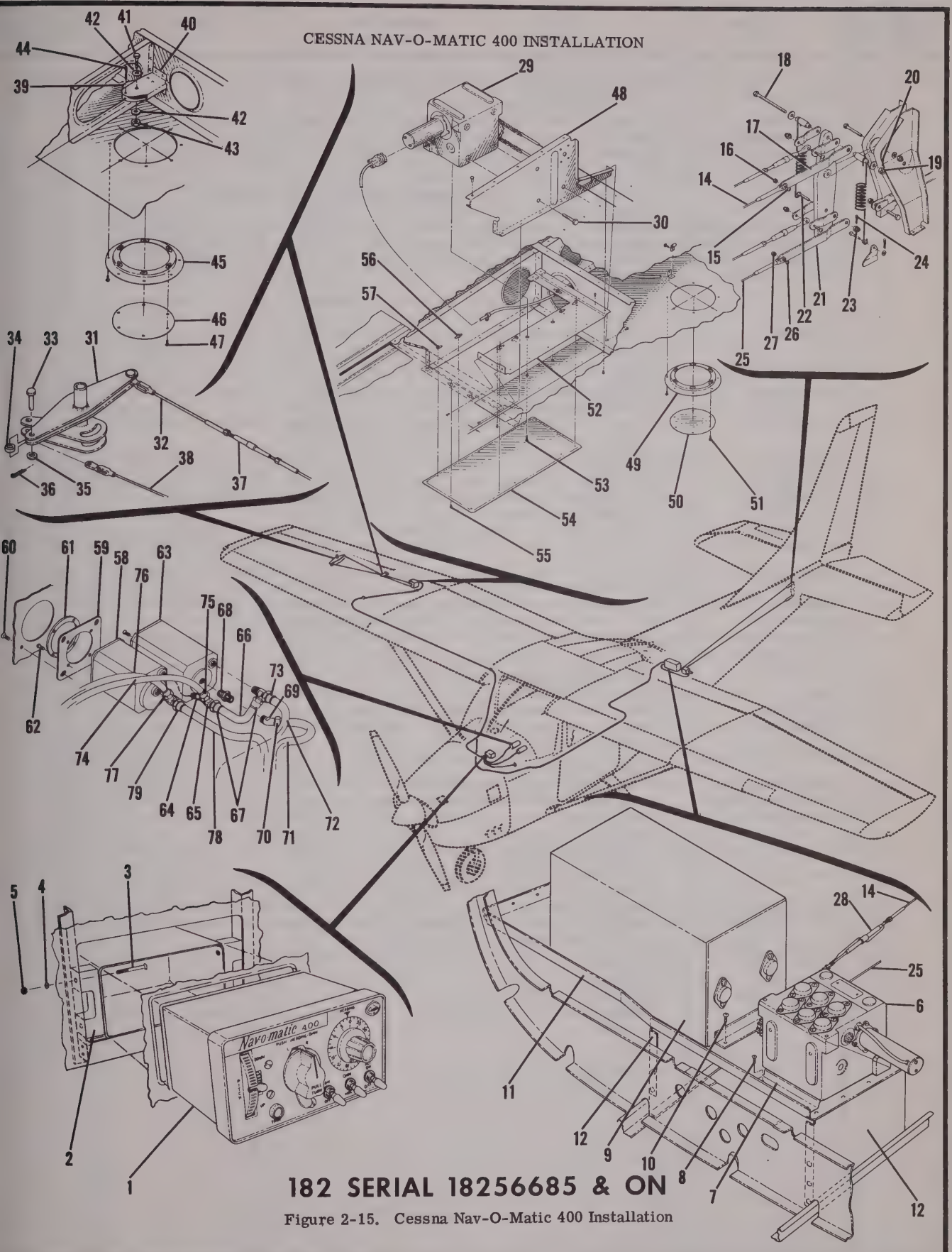


Figure 2-15. Cessna Nav-O-Matic 400 Installation

| FIGURE AND INDEX NO. | PART NUMBER | DESCRIPTION<br>1 2 3 4 5 6 7 | UNITS PER ASSY | USABLE ON CODE |
|---|---|---|---|---|
| 2-15- | | CESSNA NAV-O-MATIC 400 INSTALLATION 182 ONLY | N/P | |
| - 1 | 30510-1114 | CONTROLLER AMPLIFIER ARC | 1 | |
| | | ATTACHING PARTS | | |
| - 2 | 0713739-1 | SPACER | 2 | |
| - 3 | AN507-632R20 | SCREW | 4 | |
| - 4 | AN960-6 | WASHER | 4 | |
| - 5 | MS20365-632C | NUT | 4 | |
| | | ---*--- | | |
| | 0713750-1 | PLACARD ASSY NOT SHOWN - MOUNTED ABOVE AIRSPEED INDICATOR | 1 | |
| | R-12 1/2-75-RS34 | RHEOSTAT | 1 | |
| | S1163-2 | KNOB - REHOSTAT | 1 | |
| | S1360-10 | CIRCUIT BREAKER | 1 | |
| - 6 | 26360-0000 | ACTUATOR ARC | 1 | |
| | | ATTACHING PARTS | | |
| | AN3-4A | BOLT | 4 | |
| | | ---*--- | | |
| - 7 | 0770698-1 | MOUNTING BRACKET | 1 | |
| | | ATTACHING PARTS | | |
| - 8 | AN520-10R6 | SCREW | 4 | |
| | | ---*--- | | |
| - 9 | 30520-0014 | COMPUTER AMPLIFIER | 1 | |
| | | ATTACHING PARTS | | |
| - 10 | AN520-10R6 | SCREW | 4 | |
| | | ---*--- | | |
| - 11 | 0770699-1 | SHELF ASSY | 1 | |
| - 12 | 0770701-1 | BULKHEAD | 1 | |
| - 13 | 0770701-2 | BULKHEAD | 1 | |
| - 14 | 0770702-3 | CABLE ASSY | 1 | |
| | | ATTACHING PARTS | | |
| - 15 | MS525-10R9 | SCREW | 1 | |
| - 16 | MS20365-1032C | NUT | 1 | |
| | | ---*--- | | |
| - 17 | 1260442-1 | LINK | 1 | |
| | | ATTACHING PARTS | | |
| - 18 | AN24-14 | BOLT | 1 | |
| - 19 | AN320-4 | NUT | 1 | |
| - 20 | MS24665-134 | PIN | 1 | |
| | | ---*--- | | |
| - 21 | 1260442-1 | LINK | 1 | |
| | | ATTACHING PARTS | | |
| - 22 | AN24-15 | BOLT | 1 | |
| - 23 | AN320-4 | NUT | 1 | |
| - 24 | MS24665-134 | PIN | 1 | |
| | | ---*--- | | |
| - 25 | 0770702-1 | CABLE & CHAIN ASSY | 1 | |
| | | ATTACHING PARTS | | |
| - 26 | AN525-10R9 | SCREW | 1 | |
| - 27 | MS20365-1032C | NUT | 1 | |
| - 28 | AN155-16S | BARREL | 1 | |
| | | ---*--- | | |
| - 29 | 26360-0000 | ACTUATOR | 1 | |
| | | ATTACHING PARTS | | |
| - 30 | AN3-4A | BOLT | 4 | |
| | | ---*--- | | |
| - 31 | 1200174-1 | BELLCRANK ASSY | 1 | |
| - 32 | 1200182-2 | CABLE ASSY | 1 | |
| | | ATTACHING PARTS | | |
| - 33 | MS20392-2-9 | PIN | 1 | |
| - 34 | 1200182-9 | BUSHING | 1 | |
| - 35 | AN960-10L | WASHER | 1 | |
| - 36 | MS24665-134 | COTTER PIN | 1 | |
| - 37 | AN155-168 | BARREL | 1 | |
| | | ---*--- | | |

CONTINUED ON NEXT PAGE

| FIGURE AND INDEX NO. | PART NUMBER | DESCRIPTION<br>1 2 3 4 5 6 7 | UNITS PER ASSY | USABLE ON CODE |
|---|---|---|---|---|
| 2-15- 38 | 1200182 | CHAIN & CABLE ASSY | 1 | |
| | | ATTACHING PARTS | | |
| | MS20392-2-9 | PIN | 1 | |
| | 1200182-9 | BUSHING | 1 | |
| | AN960-10L | WASHER | 1 | |
| | MS24665-134 | COTTER PIN | 1 | |
| | | ---*--- | | |
| - 39 | S378-3L | PULLEY | 1 | |
| | | ATTACHING PARTS | | |
| - 40 | 1200183-1 | BRACKET | 1 | |
| - 41 | AN4-10A | BOLT | 1 | |
| - 42 | AN960-416L | WASHER | 2 | |
| - 43 | MS20365-428C | NUT | 1 | |
| - 44 | MS20365-132 | COTTER PIN | 1 | |
| | | ---*--- | | |
| - 45 | S226-5F | DOUBLER | 1 | |
| - 46 | S225-4F | COVER | 1 | |
| | | ATTACHING PARTS | | |
| - 47 | S1022F8-8 | SCREW | 6 | |
| | | ---*--- | | |
| - 48 | 1200167-1 | RIB ASSEMBLY | 1 | |
| | | GROMMET BULK ITEM - 3.90 INCHES LONG | 1 | |
| - 49 | S226-5F | DOUBLER | 1 | |
| - 50 | S225-4F | COVER | 1 | |
| | | ATTACHING PARTS | | |
| - 51 | S1022Z8-8 | SCREW | 6 | |
| | | ---*--- | | |
| - 52 | 1200169-1 | DOUBLER ASSY | 1 | |
| - 53 | AN515-10R9 | SCREW | 2 | |
| - 54 | 1200168-1 | COVER | 1 | |
| | | ATTACHING PARTS | | |
| - 55 | AN525-832R7 | SCREW | 14 | |
| | | ---*--- | | |
| - 56 | NAS697A08 | NUTPLATE | 6 | |
| - 57 | NAS696A08 | NUTPLATE | 3 | |
| - 58 | 30475-0100 | GYRO - HORIZON | 1 | |
| | | ATTACHING PARTS | | |
| - 59 | 0713749-6 | PLATE | 1 | |
| - 60 | AN507-1032R6 | SCREW | 4 | |
| - 61 | 2104 | RING | 1 | |
| - 62 | AN515-6R12 | SCREW | 4 | |
| | | ---*--- | | |
| - 63 | 30370-0100 | DIRECTIONAL GYRO | 1 | |
| - 64 | AN915-2D | ELBOW | 1 | |
| - 65 | S1521-1 | TEE | 1 | |
| - 66 | S1495-6 | HOSE 19.25 IN LG BULK ITEM REF S1495-6-19.25 | A/R | |
| - 67 | S1497-6 | FITTING - HOSE END | 2 | |
| - 68 | AN816-6D | NIPPLE | 1 | |
| - 69 | AN823-6D | ELBOW | 1 | |
| - 70 | S1615-6 | HOSE 10.00 IN LG BULK ITEM REF S1615-6-10.00 | A/R | |
| - 71 | S1497-6 | FITTING - HOSE END | 2 | |
| - 72 | S1495-6 | HOSE 11.00 IN LG BULK ITEM REF S1495-6-11.00 | A/R | |
| - 73 | S1497-6 | FITTING - HOSE END | 2 | |
| - 74 | S1495-6 | HOSE 11.00 IN LG BULK ITEM REF S1495-6-11.00 | A/R | |
| - 75 | S1497-6 | FITTING - HOSE END | 2 | |
| - 76 | S1495-6 | HOSE 11.00 IN LG BULK ITEM REF S1495-6-11.00 | A/R | |
| - 77 | S1497-6 | FITTING - HOSE END | 2 | |
| - 78 | S1495-6 | HOSE 11.00 IN LG BULK ITEM REF S1495-6-11.00 | A/R | |
| - 79 | S1497-6 | FITTING - HOSE END | 2 | |

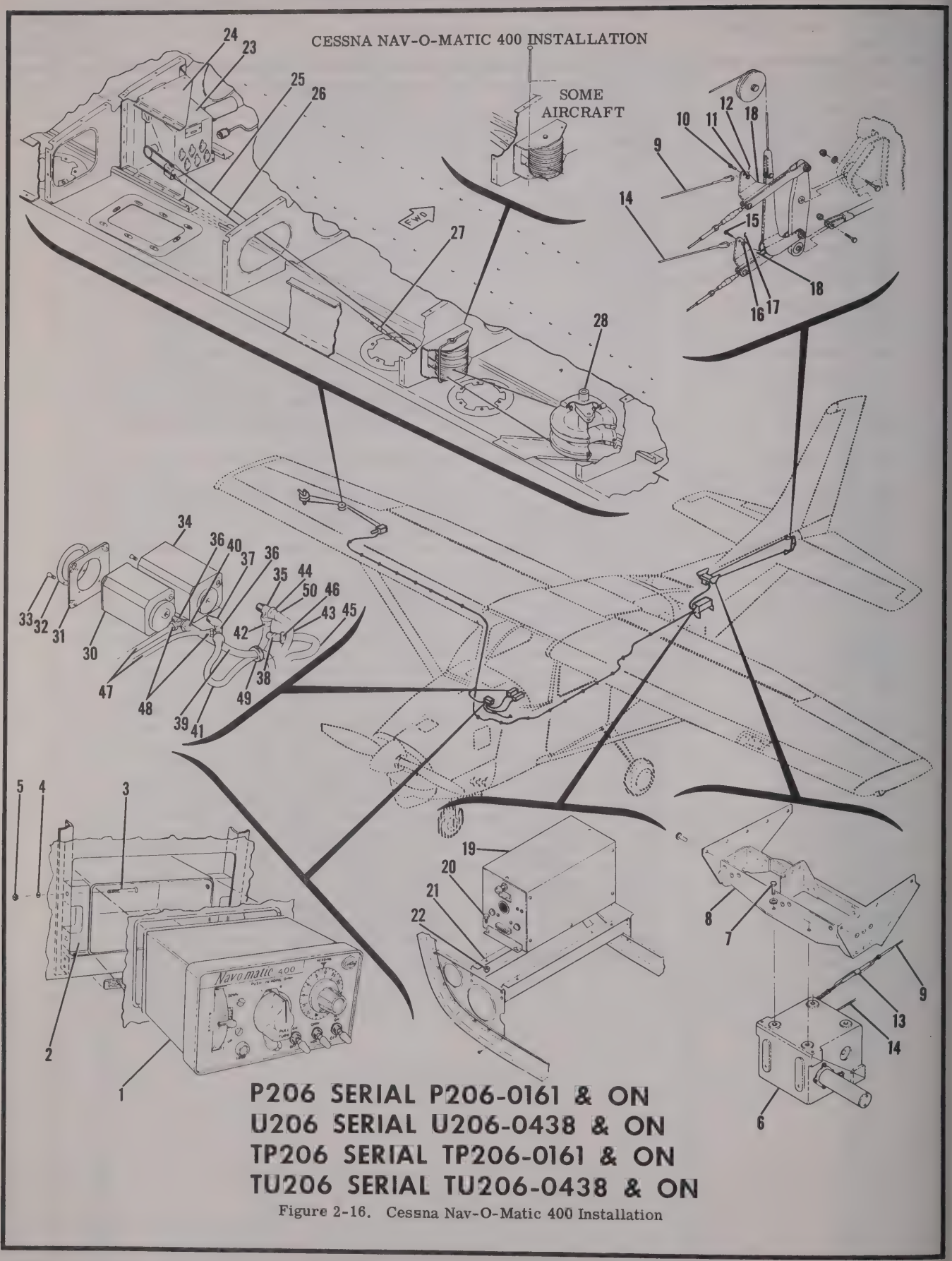


Figure 2-16. Cessna Nav-O-Matic 400 Installation

| FIGURE AND INDEX NO. | PART NUMBER | DESCRIPTION<br>1 2 3 4 5 6 7 | UNITS PER ASSY | USABLE ON CODE |
|---|---|---|---|---|
| 2-16- | | CESSNA NAV-O-MATIC 400 INSTALLATION P206, TP206, U206 & TU206 ONLY | N/P | |
| - 1 | 30510-1114 | CONTROLLER AMPLIFIER ARC | 1 | |
| | | ATTACHING PARTS | | |
| - 2 | 0713739-1 | SPACER | 2 | |
| - 3 | AN507-632R20 | SCREW | 4 | |
| - 4 | AN960-6 | WASHER | 4 | |
| - 5 | NAS697A06 | NUT | 4 | |
| | | ---*--- | | |
| | 0713749-4 | PLACARD ASSY NOT SHOWN - MOUNTED TO THE LEFT OF THE DIRECTIONAL GYRO | 1 | |
| | R12 1/2-75-RS34 | RHEOSTAT | 1 | |
| | S1163-2 | KNOB - RHEOSTAT | 1 | |
| | S1360-10 | CIRCUIT BREAKER | 1 | |
| - 6 | 26360-0000 | ACTUATOR ARC | 1 | |
| | | ATTACHING PARTS | | |
| - 7 | AN3-4A | BOLT | 4 | |
| - 8 | 1260651-1 | BRACKET ASSY | 1 | |
| | | ---*--- | | |
| - 9 | 0770702-12 | CABLE ASSY | 1 | |
| | | ATTACHING PARTS | | |
| - 10 | AN23-10 | BOLT | 1 | |
| - 11 | AN310-3 | NUT | 1 | |
| - 12 | MS24665-134 | PIN | 1 | |
| - 13 | AN155-16S | BARREL | 1 | |
| | | ---*--- | | |
| - 14 | 0770702-14 | CABLE & CHAIN ASSY | 1 | |
| | | ATTACHING PARTS | | |
| - 15 | AN23-10 | BOLT | 1 | |
| - 16 | AN310-3 | NUT | 1 | |
| - 17 | MS24665-134 | PIN | 1 | |
| | | ---*--- | | |
| - 18 | 1260645-1 | LINK | 2 | |
| - 19 | 30520-0014 | COMPUTER AMPLIFIER | 1 | |
| | | ATTACHING PARTS | | |
| - 20 | AN3-3A | BOLT | 4 | |
| - 21 | 1260652-1 | BRACKET ASSY | 1 | |
| - 22 | NAS679A3 | NUT | 4 | |
| | | ---*--- | | |
| - 23 | 26360-0000 | ACTUATOR | 1 | |
| | | ATTACHING PARTS | | |
| | AN3-4A | BOLT | 4 | |
| | | ---*--- | | |
| - 24 | 1220091-1 | BRACKET | 1 | |
| - 25 | 1270049-1 | CABLE & CHAIN ASSY | 1 | |
| | | ATTACHING PARTS | | |
| | AN21-9 | BOLT | 1 | |
| | AN320-1 | NUT | 1 | |
| | MS24665-132 | PIN | 1 | |
| | | ---*--- | | |
| - 26 | 1270049-3 | CABLE ASSY | 1 | |
| | | ATTACHING PARTS | | |
| - 27 | AN155B16S | BARREL | 1 | |
| | AN21-9 | BOLT | 1 | |
| | AN320-1 | NUT | 1 | |
| | MS24665-132 | PIN | 1 | |
| | | ---*--- | | |

CONTINUED ON NEXT PAGE

| FIGURE AND INDEX NO. | PART NUMBER | DESCRIPTION 1 2 3 4 5 6 7 | UNITS PER ASSY | USABLE ON CODE |
|---|---|---|---|---|
| 2-16- 28 | 1270051-1 | BELLCRANK | 1 | |
| | | ATTACHING PARTS | | |
| | AN21-9 | BOLT | 2 | |
| | AN320-1 | NUT | 2 | |
| | MS24665 | PIN - COTTER | 2 | |
| - 29 | MS20220-2 | PULLEY | 2 | |
| - 30 | 30475-0000 | GYRO HORIZON | 1 | |
| | | ATTACHING PARTS | | |
| - 31 | 0713749-6 | PLATE | 1 | |
| | AN507-1032R | SCREW | 4 | |
| - 32 | 2104 | RING | 1 | |
| - 33 | AN515-6R12 | SCREW | 4 | |
| | | ---*--- | | |
| - 34 | 30370-0100 | DIRECTIONAL GYRO | 1 | |
| - 35 | MS20826 | TEE | 1 | |
| - 36 | S1521-1 | TEE | 2 | |
| - 37 | AN915-2D | ELBOW | 1 | |
| - 38 | MS20823-6D | ELBOW | 1 | |
| | S1499-6LL-11.00 | HOSE ASSY | 1 | |
| - 39 | S1495-6 | HOSE-----11.00 IN LG | A/R | |
| - 40 | S1497-6 | FITTING | 2 | |
| | S1499-6LL-19.25 | HOSE ASSY | 1 | |
| - 41 | S1495-6 | HOSE-----19.25 IN LG | A/R | |
| - 42 | S1497-6 | FITTING | 2 | |
| | S1616-6LL-11.00 | HOSE ASSY | 1 | |
| - 43 | S1615-6 | HOSE-----11.00 IN LG | A/R | |
| - 44 | S1497-6 | FITTING | 2 | |
| | S1616-6LL-10.00 | HOSE ASSY | 1 | |
| - 45 | S1615-6 | HOSE | A/R | |
| - 46 | S1497-6 | FITTING | 2 | |
| | S1499-4JJ-32.00 | HOSE ASSY | 2 | |
| - 47 | S1495-4 | HOSE-----32.00 IN LG | 2 | |
| - 48 | S1497-4 | FITTING | 4 | |
| - 49 | NAS437-4B | CLAMP | 1 | |
| - 50 | NAS397-10 | CLAMP TWO EACH REQD TO ATTACH ITEM 43 & 45 | 4 | |

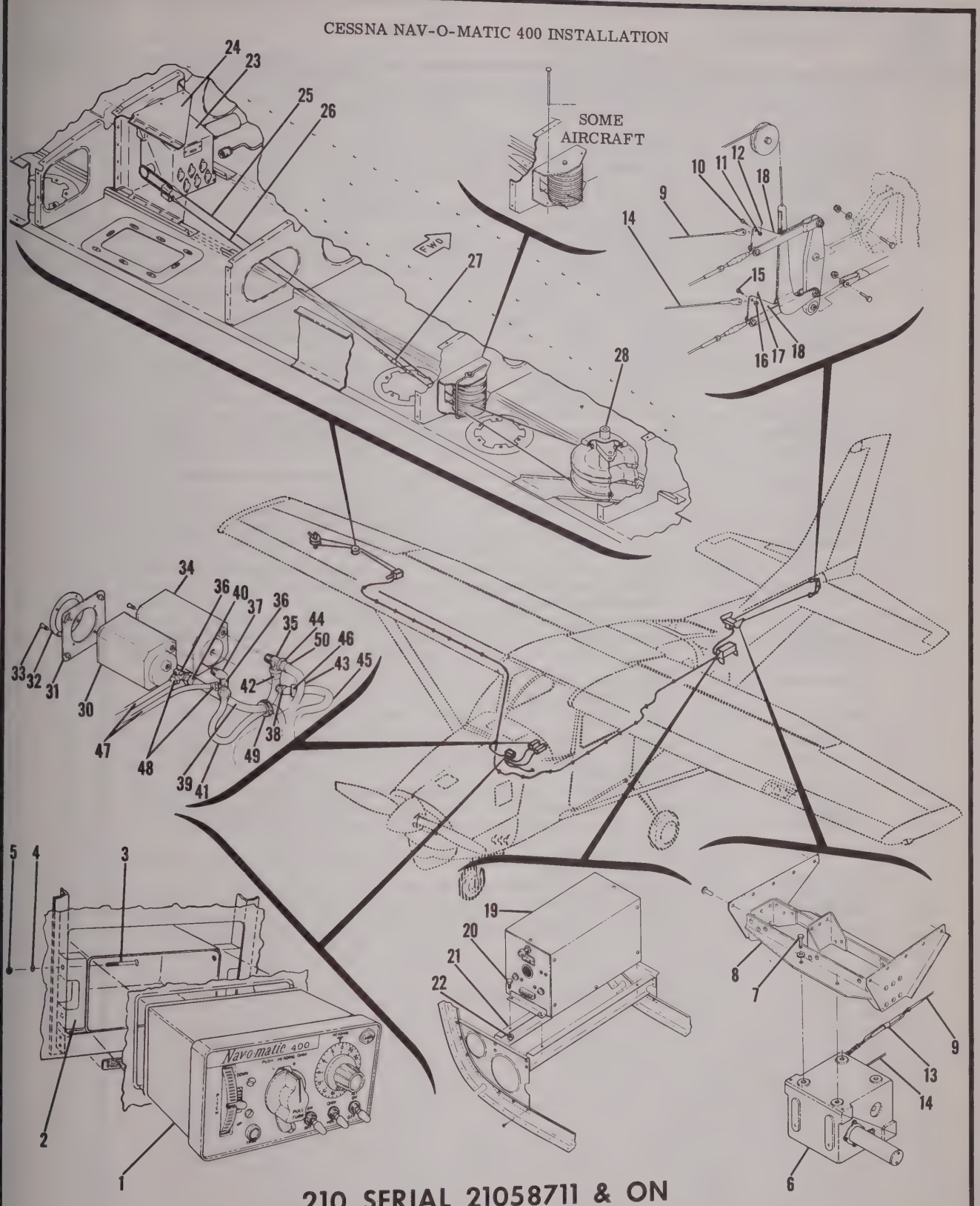


Figure 2-17. Cessna Nav-O-Matic 400 Installation

| FIGURE AND INDEX NO. | PART NUMBER | DESCRIPTION<br>1 2 3 4 5 6 7 | UNITS PER ASSY | USABLE ON CODE |
|---|---|---|---|---|
| 2-17- | | CESSNA NAV-O-MATIC 400 INSTALLATION 210 & T210 ONLY ---- | N/P | |
| - 1 | 30510-1114 | CONTROLLER AMPLIFIER ARC ---------- | 1 | |
| | | ATTACHING PARTS | | |
| - 2 | 0713739-1 | SPACER---------- | 2 | |
| - 3 | AN507-632R20 | SCREW ---------- | 4 | |
| - 4 | AN960-6 | WASHER---------- | 4 | |
| - 5 | NAS697A06 | NUT ---------- | 4 | |
| | | ---*--- | | |
| | 0713749-4 | PLACARD ASSY NOT SHOWN - MOUNTED TO THE LEFT OF THE---- | 1 | |
| | | DIRECTIONAL GYRO | | |
| | R12 1/2-75-RS34 | RHEOSTAT ---------- | 1 | |
| | S1163-2 | KNOB - RHEOSTAT ---------- | 1 | |
| | S1360-10 | CIRCUIT BREAKER ---------- | 1 | |
| - 6 | 26360-0000 | ACTUATOR ARC---------- | 1 | |
| | | ATTACHING PARTS | | |
| - 7 | AN3-4A | BOLT ---------- | 4 | |
| - 8 | 1260651-1 | BRACKET ASSY ---------- | 1 | |
| | | ---*--- | | |
| - 9 | 0770702-12 | CABLE ASSY ---------- | 1 | |
| | | ATTACHING PARTS | | |
| - 10 | AN23-10 | BOLT ---------- | 1 | |
| - 11 | AN310-3 | NUT ---------- | 1 | |
| - 12 | MS24665-134 | PIN ---------- | 1 | |
| - 13 | AN155-16S | BARREL---------- | 1 | |
| | | ---*--- | | |
| - 14 | 0770702-14 | CABLE & CHAIN ASSY ---------- | 1 | |
| | | ATTACHING PARTS | | |
| - 15 | AN23-10 | BOLT ---------- | 1 | |
| - 16 | AN310-3 | NUT ---------- | 1 | |
| - 17 | MS24665-134 | PIN ---------- | 1 | |
| | | ---*--- | | |
| - 18 | 1260649-1 | LINK ---------- | 2 | |
| - 19 | 30520-0014 | COMPUTER AMPLIFIER ---------- | 1 | |
| | | ATTACHING PARTS | | |
| - 20 | AN3-3A | BOLT ---------- | 4 | |
| - 21 | 1260652-1 | BRACKET ASSY ---------- | 1 | |
| - 22 | NAS679A3 | NUT ---------- | 4 | |
| | | ---*--- | | |
| - 23 | 26360-0000 | ACTUATOR ---------- | 1 | |
| | | ATTACHING PARTS | | |
| | AN3-4A | BOLT ---------- | 4 | |
| | | ---*--- | | |
| - 24 | 1220091-1 | BRACKET ---------- | 1 | |
| - 25 | 1270049-1 | CABLE & CHAIN ASSY ---------- | 1 | |
| | | ATTACHING PARTS | | |
| | AN21-9 | BOLT ---------- | 1 | |
| | AN320-1 | NUT ---------- | 1 | |
| | MS24665-132 | PIN ---------- | 1 | |
| | | ---*--- | | |
| - 26 | 1270049-3 | CABLE ASSY ---------- | 1 | |
| | | ATTACHING PARTS | | |
| - 27 | AN155B16S | BARREL---------- | 1 | |
| | AN21-9 | BOLT ---------- | 1 | |
| | AN320-1 | NUT ---------- | 1 | |
| | MS24665-132 | PIN ---------- | 1 | |
| | | ---*--- | | |

CONTINUED ON NEXT PAGE

| FIGURE AND INDEX NO. | PART NUMBER | DESCRIPTION<br>1 2 3 4 5 6 7 | UNITS PER ASSY | USABLE ON CODE |
|---|---|---|---|---|
| 2-17- 28 | 1270051-1 | BELLCRANK | 1 | |
| | | ATTACHING PARTS | | |
| | AN21-9 | BOLT | 2 | |
| | AN320-1 | NUT | 2 | |
| | MS24665 | PIN - COTTER | 2 | |
| - 29 | MS20220-2 | PULLEY | 2 | |
| - 30 | 30475-0000 | GYRO HORIZON | 1 | |
| | | ATTACHING PARTS | | |
| - 31 | 0713749-6 | PLATE | 1 | |
| | AN507-1032R | SCREW | 4 | |
| - 32 | 2104 | RING | 1 | |
| - 33 | AN515-6R12 | SCREW | 4 | |
| | | ---*--- | | |
| - 34 | 30370-0100 | DIRECTIONAL GYRO | 1 | |
| - 35 | MS20826 | TEE | 1 | |
| - 36 | S1521-1 | TEE | 2 | |
| - 37 | AN915-2D | ELBOW | 1 | |
| - 38 | MS20823-6D | ELBOW | 1 | |
| | S1499-6LL-11.00 | HOSE ASSY | 1 | |
| - 39 | S1495-6 | HOSE-----11.00 IN LG | A/R | |
| - 40 | S1497-6 | FITTING | 2 | |
| | S1499-6LL-19.25 | HOSE ASSY | 1 | |
| - 41 | S1495-6 | HOSE-----19.25 IN LG | A/R | |
| - 42 | S1497-6 | FITTING | 2 | |
| | S1616-6LL-11.00 | HOSE ASSY | 1 | |
| - 43 | S1615-6 | HOSE-----11.00 IN LG | A/R | |
| - 44 | S1497-6 | FITTING | 2 | |
| | S1616-6LL-10.00 | HOSE ASSY | 1 | |
| - 45 | S1615-6 | HOSE | A/R | |
| - 46 | S1497-6 | FITTING | 2 | |
| | S1499-4JJ-32.00 | HOSE ASSY | 2 | |
| - 47 | S1495-4 | HOSE-----32.00 IN LG | 2 | |
| - 48 | S1497-4 | FITTING | 4 | |
| - 49 | NAS437-4B | CLAMP | 1 | |
| - 50 | NAS397-10 | CLAMP TWO EACH REQD TO ATTACH ITEM 43 & 45 | 4 | |

CESSNA NAV-O-MATIC 400 INSTALLATION

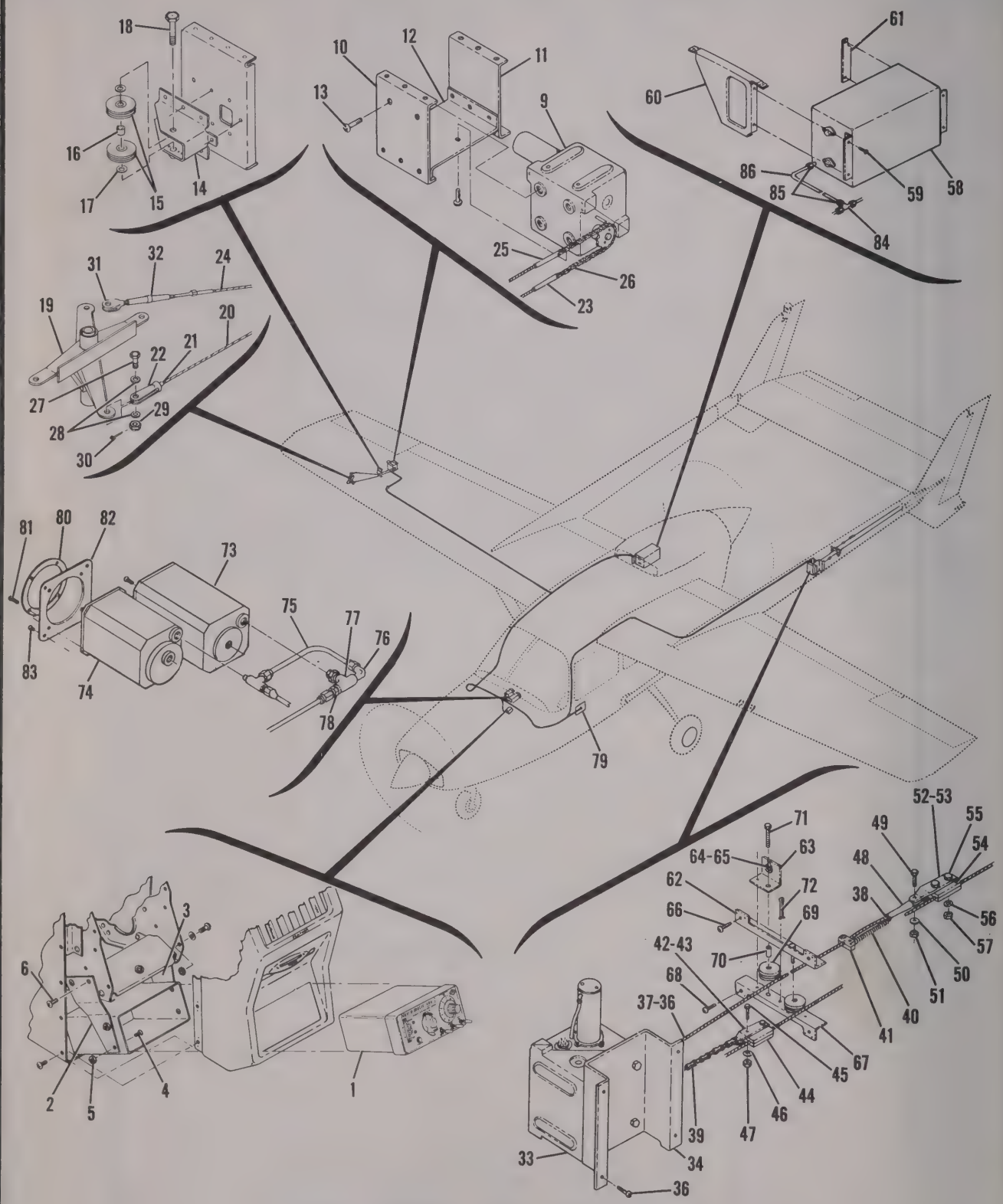


## 337 SERIAL 337-0240 & ON

Figure 2-18. Cessna Nav-O-Matic 400 Installation

| FIGURE AND INDEX NO. | PART NUMBER | DESCRIPTION<br>1 2 3 4 5 6 7 | UNITS PER ASSY | USABLE ON CODE |
|---|---|---|---|---|
| 2-18- | | CESSNA NAV-O-MATIC 400 INSTALLATION 337 ONLY | | |
| - 1 | 30510-1128 | CONTROLLER AMPLIFIER - 28 VOLT | 1 | |
| | | ATTACHING PARTS | 1 | |
| - 2 | 1470066-23 | BRACKET - CONTROLLER - L.H. | | |
| - 3 | 1470066-24 | BRACKET - CONTROLLER - R.H. | 1 | |
| - 4 | AN507-632R6 | SCREW | 1 | |
| - 5 | MS20365-632C | NUT | 4 | |
| - 6 | AN515-8R6 | SCREW STANDARD EQUIPMENT | 4 | |
| | | ---*--- | 4 | |
| - 7 | | NOT USED | | |
| - 8 | | NOT USED | | |
| - 9 | 29510-0000 | ACTUATOR ASSY 28 VOLT | | |
| | | ATTACHING PARTS | 1 | |
| - 10 | 1422023-1 | PLATE - 40 PER CENT CHORD TIE | | |
| - 11 | 1422023-2 | PLATE - 50 PERCENT CHORD TIE | 1 | |
| - 12 | 1422023-3 | PLATE - ACTUATOR SUPPORT | 1 | |
| | AN960-10 | WASHER | 1 | |
| - 13 | AN520-10R10 | SCREW | 4 | |
| | | ---*--- | 4 | |
| - 14 | 1470067-4 | BRACKET ASSY - PULLEY | 1 | |
| - 15 | S-378-1 | PULLEY | 2 | |
| | | ATTACHING PARTS | | |
| - 16 | NAS43-3-15 | SPACER | 1 | |
| - 17 | AN960-10L | WASHER - LOCK | 2 | |
| - 18 | AN3-12A | BOLT | 1 | |
| | | ---*--- | | |
| - 19 | 1462000-2 | BELLCRANK ASSY RH - AILERON | 1 | |
| | 1470067-6 | CHAIN & CABLE ASSY | 1 | |
| - 20 | 1470067-7 | CABLE ASSY - FWD | 1 | |
| | 1470067-13 | CABLE - FWD | 1 | |
| - 21 | AN664C3 | BALL - SHANK | 1 | |
| - 22 | RA2500-3 | FORK END STRAP | 1 | |
| - 23 | NAS287-25-3 | TERMINAL | 1 | |
| - 24 | 1470067-8 | CABLE ASSY - AFT | 1 | |
| | AN6693RH | TERMINAL | 1 | |
| | 1470067-14 | CABLE - AFT | 1 | |
| - 25 | NAS287-25-3 | TERMINAL | 1 | |
| - 26 | ASA#25 | CHAIN 8.25 INCHES REQD | A/R | |
| | | ATTACHING PARTS | | |
| - 27 | AN3-7 | BOLT | 2 | |
| - 28 | AN960-C10L | WASHER | 4 | |
| - 29 | AN310-C3 | NUT | 2 | |
| - 30 | MS24665-134 | COTTER PIN | 2 | |
| | | ---*--- | | |
| - 31 | AN161-16LS | FORK | 1 | |
| - 32 | AN155-16S | BARREL - TURNBUCKEL | 1 | |
| | S-1291-4 | GROMMET USED FOR WIRE ROUTING AT 20% WING CORD LINE | 1 | |
| - 33 | 29510-0400 | ACTUATOR - PITCH | 1 | |
| | | ATTACHING PARTS | | |
| - 34 | 1470066-26 | BRACKET ASSY | 1 | |
| - 35 | AN525-832R8 | SCREW | 4 | |
| | | ---*--- | | |
| | 1470067-27 | CHAIN & CABLE ASSY | N/P | |
| - 36 | 1470067-28 | CABLE ASSY | 1 | |
| | 1470067-5 | CABLE - PITCH | 1 | |
| - 37 | NAS287-25-3 | TERMINAL | 1 | |
| - 38 | AN664C3 | BALL - SHANK | 1 | |
| - 39 | 1470067-23 | CHAIN 14 INCHES REQD | A/R | |
| - 40 | 1470066-54 | SPRING | 1 | |
| | | ATTACHING PARTS | | |
| - 41 | 1460326-1 | BLOCK - STOP | 2 | |
| | AN515-8R6 | SCREW | 2 | |
| | | ---*--- | | |

CONTINUED ON NEXT PAGE

| FIGURE AND INDEX NO. | PART NUMBER | DESCRIPTION 1 2 3 4 5 6 7 | UNITS PER ASSY | USABLE ON CODE |
|---|---|---|---|---|
| 2-18- 42 | 1470066-33 | LINK | 1 | |
| - 43 | 1470066-32 | LINK | 1 | |
| | | ATTACHING PARTS | | |
| - 44 | 0861520-1 | CLAMP HALF | 2 | |
| - 45 | AN3-10A | BOLT | 2 | |
| - 46 | AN960-10 | WASHER | 2 | |
| - 47 | MS20365-1032C | NUT | 2 | |
| | | ---*--- | | |
| - 48 | RA2482-3 | EYE END ACA | 1 | |
| | | ATTACHING PARTS | | |
| - 49 | AN3-5A | BOLT | 1 | |
| - 50 | AN960-10 | WASHER | 1 | |
| - 51 | MS20365-1032C | NUT | 1 | |
| | | ---*--- | | |
| - 52 | 1470066-34 | LINK | 1 | |
| - 53 | 1470066-35 | LINK | 1 | |
| | | ATTACHING PARTS | | |
| - 54 | 0861520-1 | CLAMP HALF | 2 | |
| - 55 | AN3-10A | BOLT | 2 | |
| - 56 | AN960-10 | WASHER | 2 | |
| - 57 | MS20365-1032C | NUT | 2 | |
| | | ---*--- | | |
| - 58 | 30520-0028 | COMPUTER AMPLIFIER ASSY | 1 | |
| | | ATTACHING PARTS | | |
| - 59 | AN3-3A | BOLT | 4 | |
| | | ---*--- | | |
| - 60 | 1470066-50 | BRACKET ASSY - COMPUTER FWD | 1 | |
| - 61 | 1470066-52 | BRACKET ASSY - COMPUTER AFT | 1 | |
| - 62 | 1470066-14 | BRACKET ASSY - PULLEY | 1 | |
| - 63 | 1470066-55 | CLIP | 1 | |
| - 64 | S338-1 | FAIRLEAD | 2 | |
| - 65 | S339-1 | CLIP | 1 | |
| | | ATTACHING PARTS | | |
| - 66 | AN520-10R10 | SCREW | 2 | |
| | | ---*--- | | |
| - 67 | 1470066-12 | BRACKET ASSY - PULLEY | 1 | |
| | | ATTACHING PARTS | | |
| - 68 | AN520-10R10 | SCREW | 2 | |
| | | ---*--- | | |
| - 69 | S394 | PULLEY | 2 | |
| | | ATTACHING PARTS | | |
| - 70 | 0411783 | BUSHING | 2 | |
| - 71 | AN3-7A | BOLT | 2 | |
| - 72 | MS24665-287 | COTTER PIN | 1 | |
| | | ---*--- | | |
| - 73 | 30370-0100 | DIRECTIONAL GYRO - REFER TO PARTS CATALOG FOR | 1 | |
| | | VACUUM FITTINGS | | |
| - 74 | 30475-0000 | ATTITUDE GYRO | 1 | |
| - 75 | 1400106-170 | TUBE ASSY | 1 | |
| - 76 | MS20822-6D | ELBOW | 1 | |
| - 77 | AN917-2D | TEE | 1 | |
| - 78 | AN911-2D | NIPPLE | 1 | |
| - 79 | S-1360-5 | CIRCUIT BREAKER | 1 | |
| - 80 | 2104 | RING | 1 | |
| | | ATTACHING PARTS | | |
| - 81 | AN515-6R12 | SCREW | 4 | |
| | | ---*--- | | |
| - 82 | 0713749-6 | PLATE | 1 | |
| | | ATTACHING PARTS | | |
| - 83 | AN507-1032R6 | SCREW | 4 | |
| | | ---*--- | | |
| - 84 | S1137-1 | TEE | 1 | |
| - 85 | S1130-1 | NUT | 2 | |
| | S1131-1 | INSERT | 2 | |
| - 86 | S1071-1 | LINE BULK ITEM A | A/R | |

CESSNA ADF 500 - FIXED LOOP

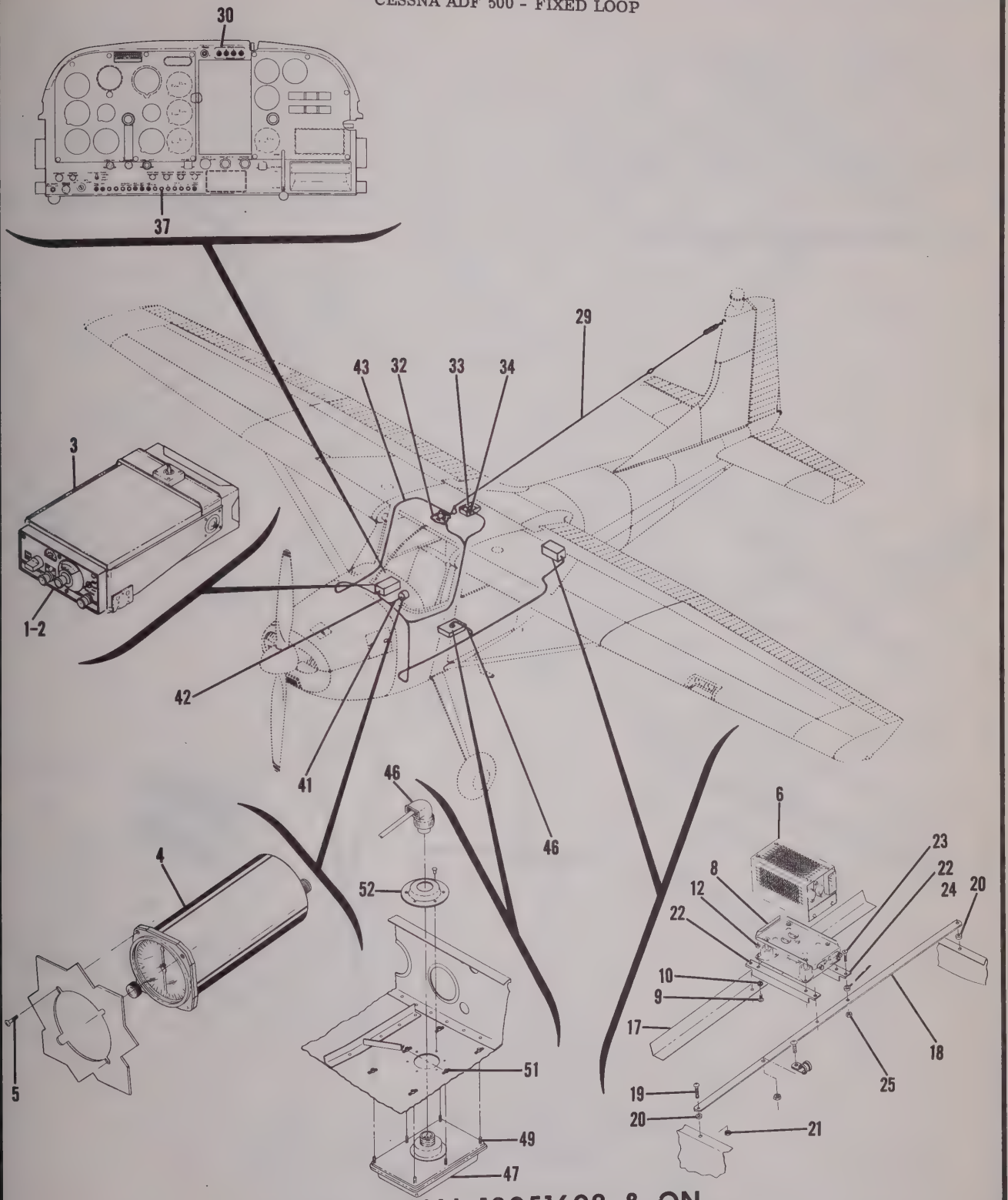


**180 SERIAL 18051608 & ON**
**185 SERIAL 185-0968 & ON**

Figure 2-19. Cessna ADF 500 (Type 318G - Fixed Loop) Installation - Sheet 1

CESSNA ADF 500 - FIXED LOOP

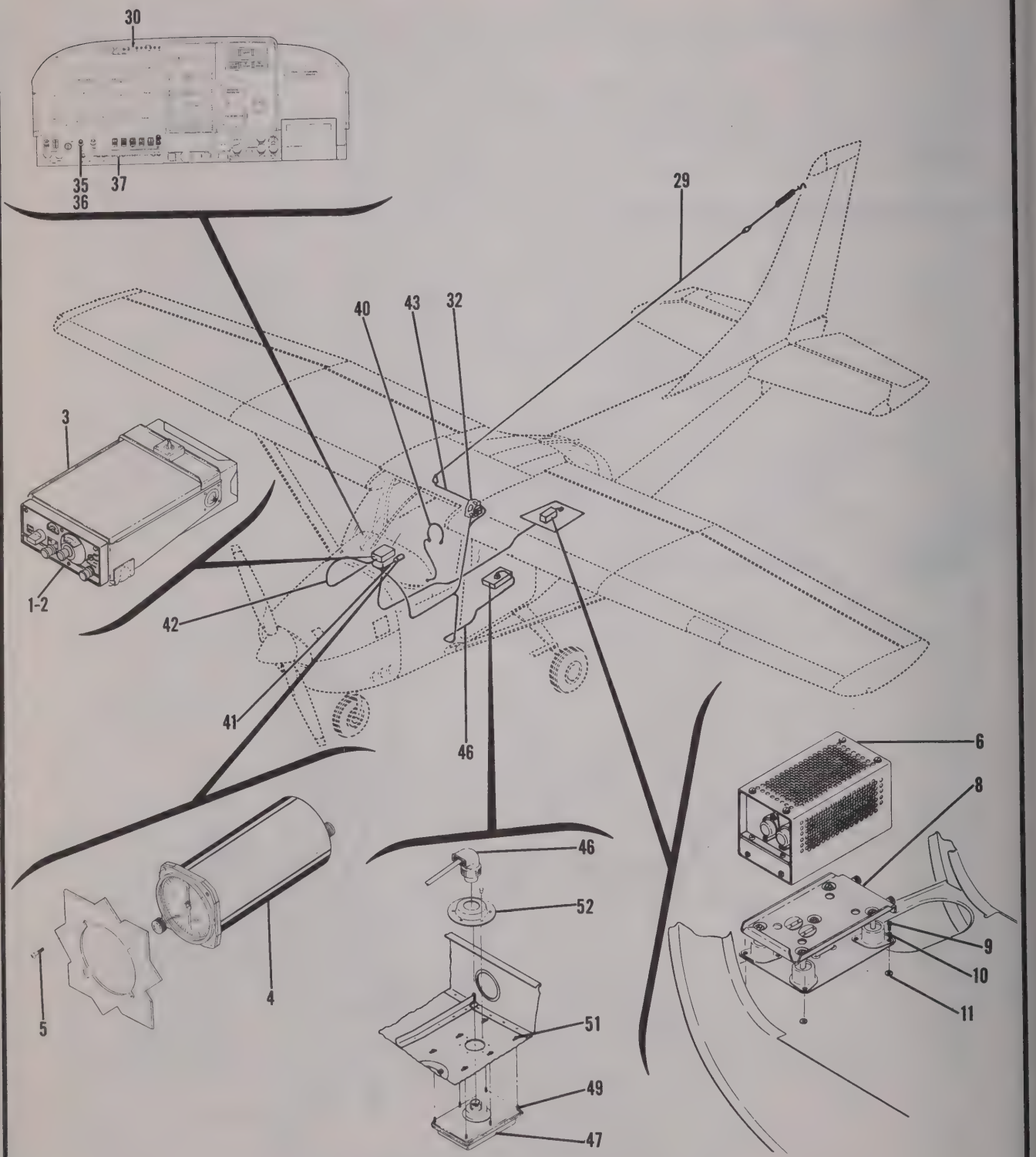


## 182 SERIAL 18256685 & ON

Figure 2-19. Cessna ADF 500 (Type 318G - Fixed Loop) Installation - Sheet 2

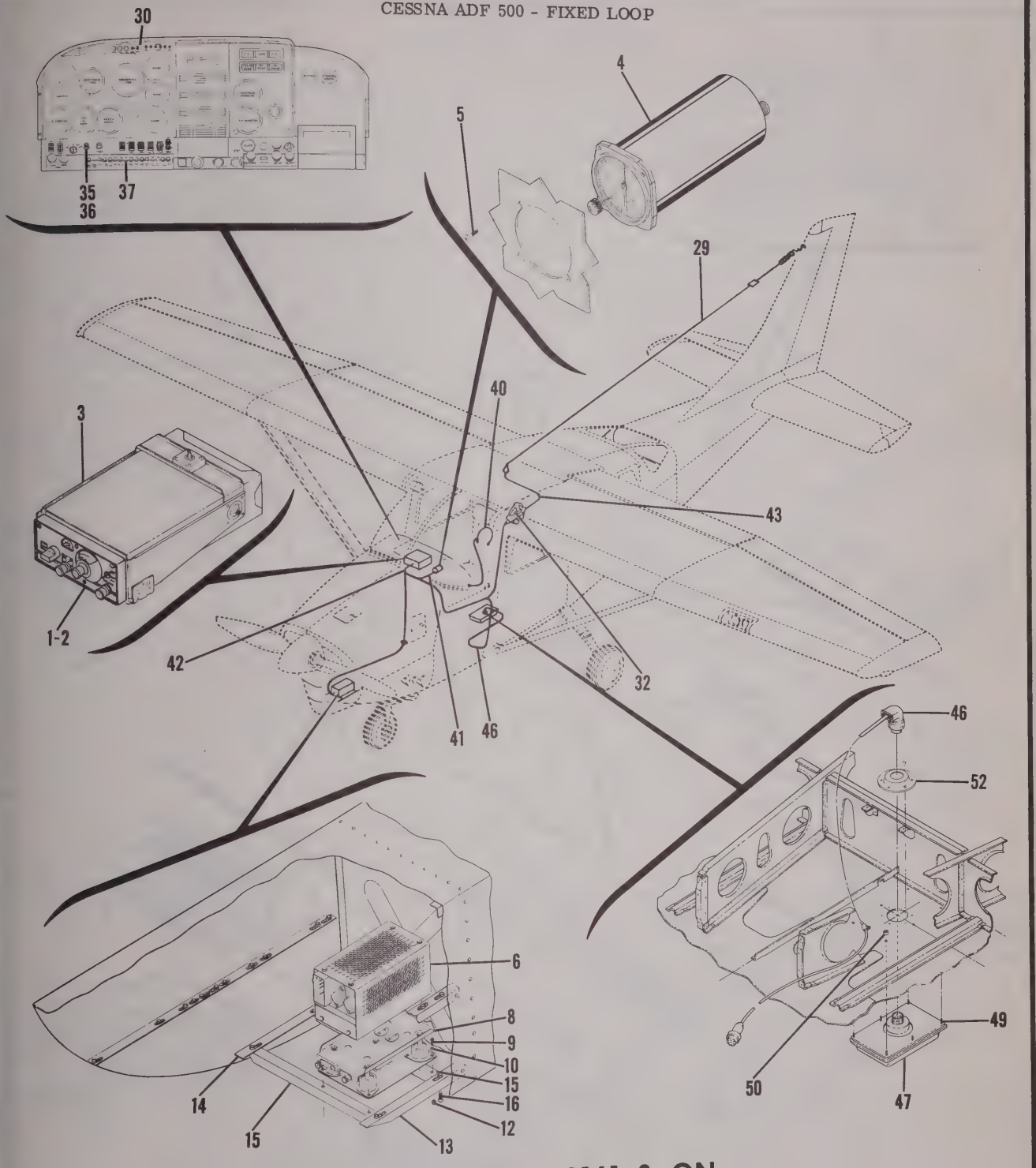


**P206 SERIAL P206-0161 & ON**
**U206 SERIAL U206-0438 & ON**
**TP206 SERIAL TP206-0161 & ON**
**TU206 SERIAL TU206-0438 & ON**

Figure 2-19. Cessna ADF 500 (Type 318G - Fixed Loop) Installation - Sheet 3

CESSNA ADF 500 - FIXED LOOP

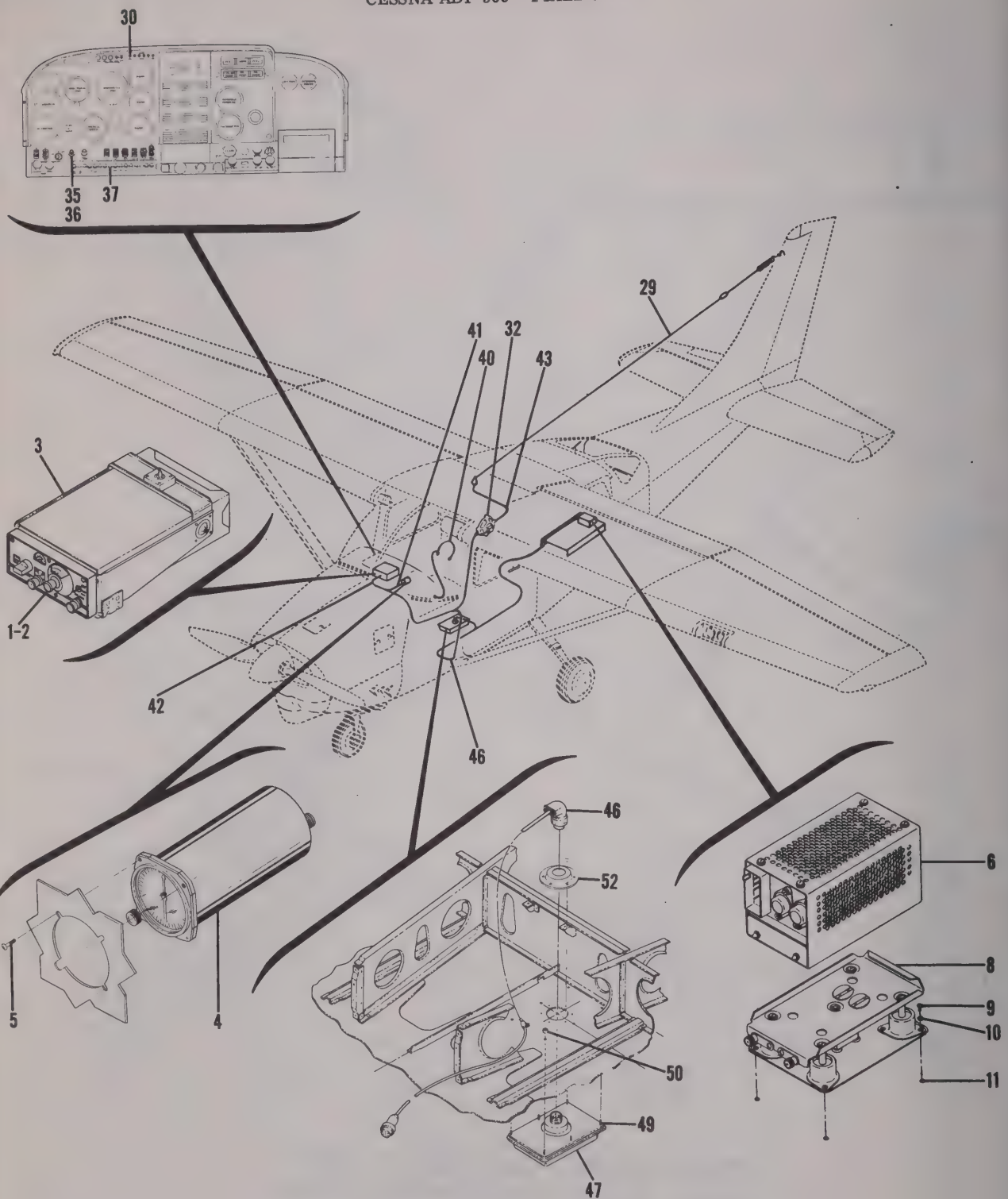


## 210 SERIAL 21058711 & ON
## T210 SERIAL T210-0001 & ON

Figure 2-19. Cessna ADF 500 (Type 318G - Fixed Loop) Installation - Sheet 4

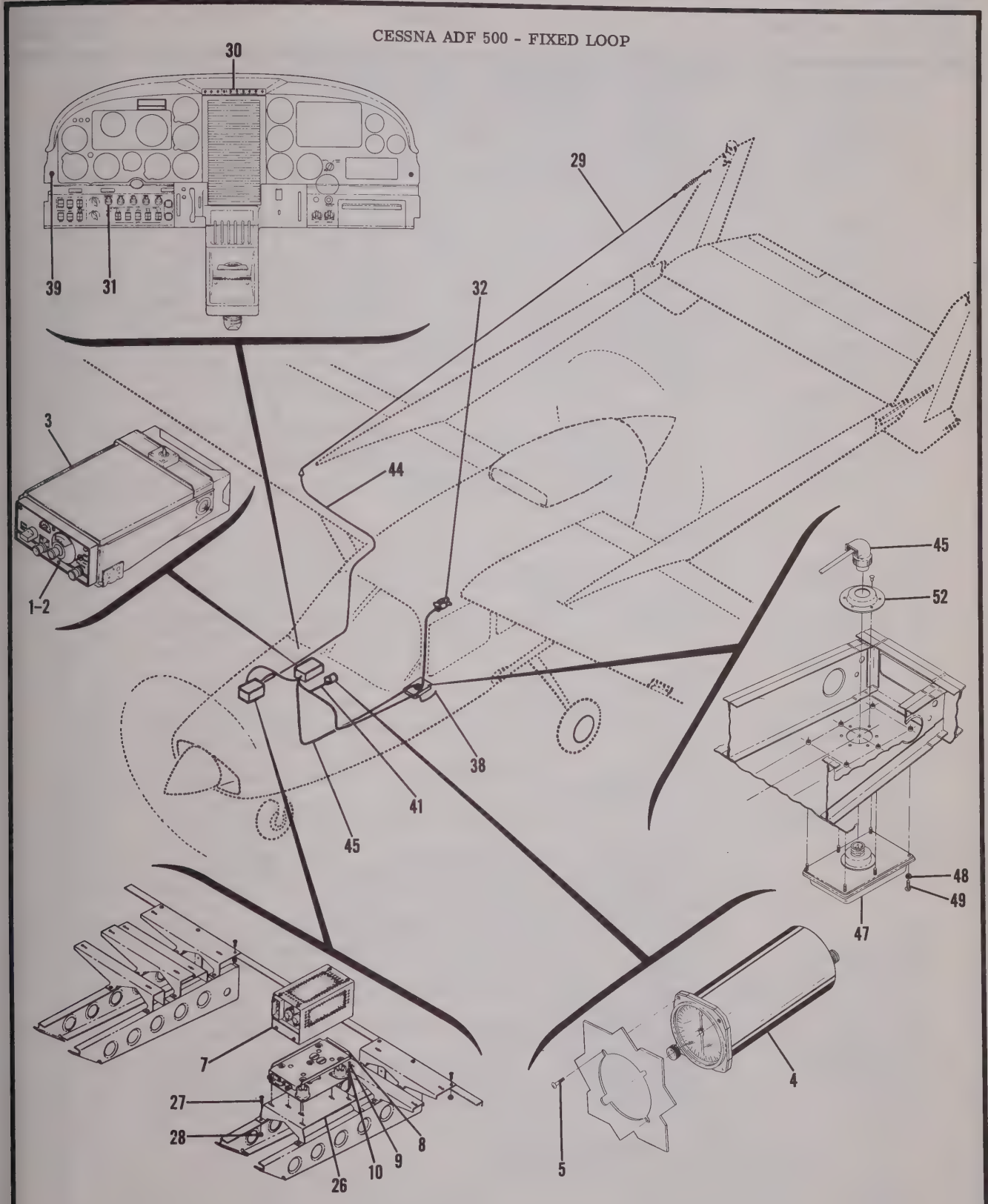


## 337 SERIAL 337-0240 & ON

Figure 2-19. Cessna ADF 500 (Type 318G - Fixed Loop) Installation - Sheet 5

| FIGURE AND INDEX NO. | PART NUMBER | DESCRIPTION<br>1 2 3 4 5 6 7 | UNITS PER ASSY | USABLE ON CODE |
|---|---|---|---|---|
| 2-19- | | CESSNA ADF 500 RADIO INSTALLATION - FIXED LOOP | N/P | |
| - 1 | 33230-1000 | RECEIVER - WITHOUT BFO - TYPE R-318G-10 - 14 & 28 VOLT | A/R | |
| - 2 | 33230-1200 | RECEIVER - WITH BFO - TYPE R-318G-12 - 14 & 28 VOLT | A/R | |
| - 3 | 33370 | MOUNTING - TYPE M-301G - SINGLE TSO | A/R | |
| | 0770722-1 | MOUNTING - DUAL TSO | A/R | |
| | 0770723-1 | MOUNTING - 3 OR 4 TSO RADIOS | A/R | |
| | | ATTACHING PARTS | | |
| | AN515-6R6 | SCREW - 6 REQD FOR DUAL MOUNTING & 8 REQD ON 3 OR 4 STACK MOUNTING | 4 | |
| | | ---*--- | | |
| - 4 | 33550 | INDICATOR - SINGLE RCVR - TYPE IN-21C | A/R | |
| | | ATTACHING PARTS | | |
| - 5 | AN507B632R12 | SCREW | 4 | |
| | | ---*--- | | |
| - 6 | 34660-0014 | DYNAVERTER - TYPE DV-318A-1 - 14 VOLT | A/R | |
| - 7 | 34660-0028 | DYNAVERTER - TYPE DV-318A-1 - 28 VOLT | A/R | |
| - 8 | 21650 | MOUNTING - TYPE M-28A | 1 | |
| | | ATTACHING PARTS | | |
| - 9 | AN515-8R16 | SCREW | 4 | |
| - 10 | AN936A8 | WASHER | 4 | |
| - 11 | A8K75 | RIVNUT-----182, 210, T210 & 337 ONLY | 4 | |
| - 12 | MS20365-832C | NUT ALL MODELS EXCEPT 182, 210, T210 & 337 | 4 | |
| | | ---*--- | | |
| - 13 | 1270627-29 | SIDE ANGLE ASSY - LH SIDE - OPT LOWER LOCATION 205,---- 206, P206, U206, TP206 & TU206 ONLY | 1 | |
| - 14 | 1270627-30 | SIDE ANGLE ASSY - RH SIDE - OPT LOWER LOCATION 205,---- 206, P206, U206, TP206 & TU206 ONLY | 1 | |
| - 15 | 1270627-70 | ATTACH ANGLE - OPT LOWER LOCATION 205, 206, P206, U206, TP206 & TU206 | 2 | |
| | | ATTACHING PARTS | | |
| - 16 | AN520-10R6 | SCREW | 4 | |
| | | ---*--- | | |
| - 17 | 0770712-1 | ANGLE - STD EQUIPMENT-----180 & 185 ONLY | REF | |
| - 18 | 0770049-1 | ANGLE 180 & 185 ONLY | 1 | |
| | | ATTACHING PARTS | | |
| - 19 | AN515-8R10 | SCREW | 1 | |
| - 20 | S355 | SPACER | 2 | |
| - 21 | MS20365-832C | NUT | 2 | |
| | | ---*--- | | |
| - 22 | 0770713-1 | ANGLE 180 & 185 ONLY | 2 | |
| | | ATTACHING PARTS | | |
| - 23 | AN515-8R10 | SCREW | 4 | |
| - 24 | S355 | SPACER | 4 | |
| - 25 | MS20365-832C | NUT | 4 | |
| | | ---*--- | | |
| - 26 | 1513631-1 | SUPPORT ASSY 337 ONLY | 1 | |
| | | ATTACHING PARTS | | |
| - 27 | AN515-8R8 | SCREW | 4 | |
| - 28 | MS20365-832C | NUT | 4 | |
| | | ---*--- | | |
| - 29 | | ADF - SENSE - ANTENNA INSTALLATION SEE FIGURE 8-6 | 1 | |
| - 30 | | TRANSMITTER & AUDIO SEL SW INSTALLATION SEE FIGURE 9-1 | 1 | |
| - 31 | | DROPPING RESISTOR - FLT INST & RADIO DIAL LT SEE FIGURE 10-2 337 ONLY | A/R | |
| | | RADIO COOLING INSTALLATION---- SEE FIGURE 10-1 | A/R | |
| - 32 | | SPEAKER INSTALLATION SEE FIGURE 9-3 | 1 | |
| | | RADIO NOISE FILTER INSTALLATION SEE FIGURE 10-5 | A/R | |
| - 33 | 0413126-5 | RHEOSTAT 180 & 185 ONLY | 1 | |
| - 34 | S1390-3 | KNOB ASSY 180 & 185 ONLY | 1 | |
| - 35 | R-12 1/2-75-RS34 | RHEOSTAT 182, 205, 206, P206, U206, TP206, TU206, 210 & T210 ONLY | 1 | |
| - 36 | S1163-2 | KNOB - RHEOSTAT 182, 205, 206, P206, U206, TP206, TU206, 210 & T210 ONLY | 1 | |
| - 37 | S1360-10 | CIRCUIT BREAKER ALL MODELS EXCEPT 337 | 1 | |
| - 38 | S1360-5 | CIRCUIT BREAKER 337 ONLY | 1 | |
| - 39 | S1103-1 | PHONE JACK | 1 | |
| - 40 | | HEADSET ASSY SEE FIGURE 9-5 | 1 | |

CONTINUED ON NEXT PAGE

| FIGURE AND INDEX NO. | PART NUMBER | DESCRIPTION<br>1 2 3 4 5 6 7 | UNITS PER ASSY | USABLE ON CODE |
|---|---|---|---|---|
| 2-19- 41 | 33488-0001 | CABLE ASSY - RCVR TO GONIO INDICATOR ---------- | 1 | |
| - 42 | | CABLE ASSY - MAIN ---------- | N/P | |
| | 26795 | CONNECTOR KIT - 15 PIN - MATES RCVR ---------- | 1 | |
| | 27881 | CONNECTOR KIT - 19 PIN - MATES DYNAVERTER ---------- | 1 | |
| | 33979 | CONNECTOR - 6 PIN - MATES RCVR ---------- | 1 | |
| - 43 | 18637-0000 | CABLE ASSY - RCVR TO SENSE ANT-----ALL MODELS EXCEPT 337<br>14 FEET LONG - LENGTH OF CABLE IS CRITICAL - DO NOT ALTER | 1 | |
| - 44 | 1570001-210 | CABLE ASSY - RCVR TO SENSE ANT-----337 ONLY 13 FEET----<br>LONG - LENGTH OF CABLE IS CRITICAL - DO NOT ALTER | 1 | |
| - 45 | 32803 | CABLE ASSY - GONIO INDICATOR TO LOOP ANT-----20 FEET LONG<br>337 ONLY | 1 | |
| - 46 | 33827 | CABLE ASSY - GONIO INDICATOR TO LOOP ANT-----9 FEET LONG<br>ALL MODELS EXCEPT 337 | 1 | |
| - 47 | 33890-1000 | LOOP ANTENNA TUPE L-318G ARC ----------<br>ATTACHING PARTS | 1 | |
| - 48 | AN936A6 | WASHER---------- | 6 | |
| - 49 | AN515-6R12 | SCREW ---------- | 6 | |
| - 50 | A6K75 | RIVNUT-----ALL MODELS EXCEPT 180 & 185 ---------- | 6 | |
| - 51 | NAS697A06L | NUTPLATE 180 & 185 ONLY ---------- | 6 | |
| - 52 | 1511005-1 | SHIELD - ADF LOOP ---------- | 1 | |

# SECTION III

# KING ELECTRONIC EQUIPMENT

TABLE OF CONTENTS


| Figure | | Page |
|---|---|---|
| 3-1 | King KY-90 or KY-95 Radio Installation | 3-2 |
| 3-2 | King KX-100 or KX-120 Radio Installation (See Figure 3-5) for Model 336) | 3-12 |
| 3-3 | King KX-150 Radio Installation | 3-20 |
| 3-4 | King KR-20 Marker Beacon Receiver Installation | 3-30 |
| 3-5 | King KX-120 or KX-130 Radio Installations (336 Only) | 3-32 |
| 3-6 | King KX-160 Radio Installation | 3-36 |
| 3-7 | King KN-60 DME Radio Installation | 3-45 |

KING KY-90 OR KY-95 RADIO INSTALLATION

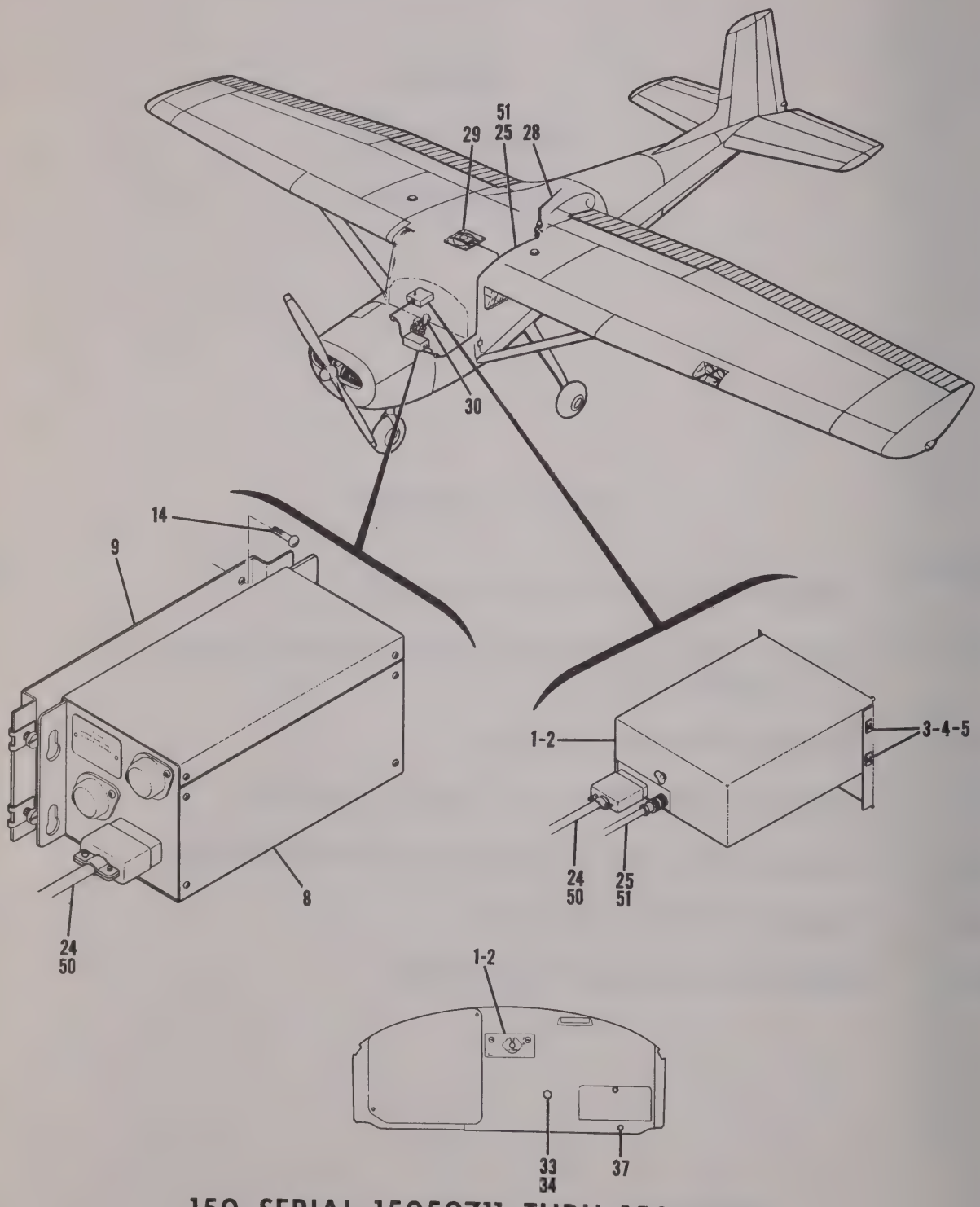


150 SERIAL 15059711 THRU 15060087

Figure 3-1. King KY-90 or KY-95 Radio Installation - Sheet 1

KING KY-90 OR KY-95 RADIO INSTALLATION

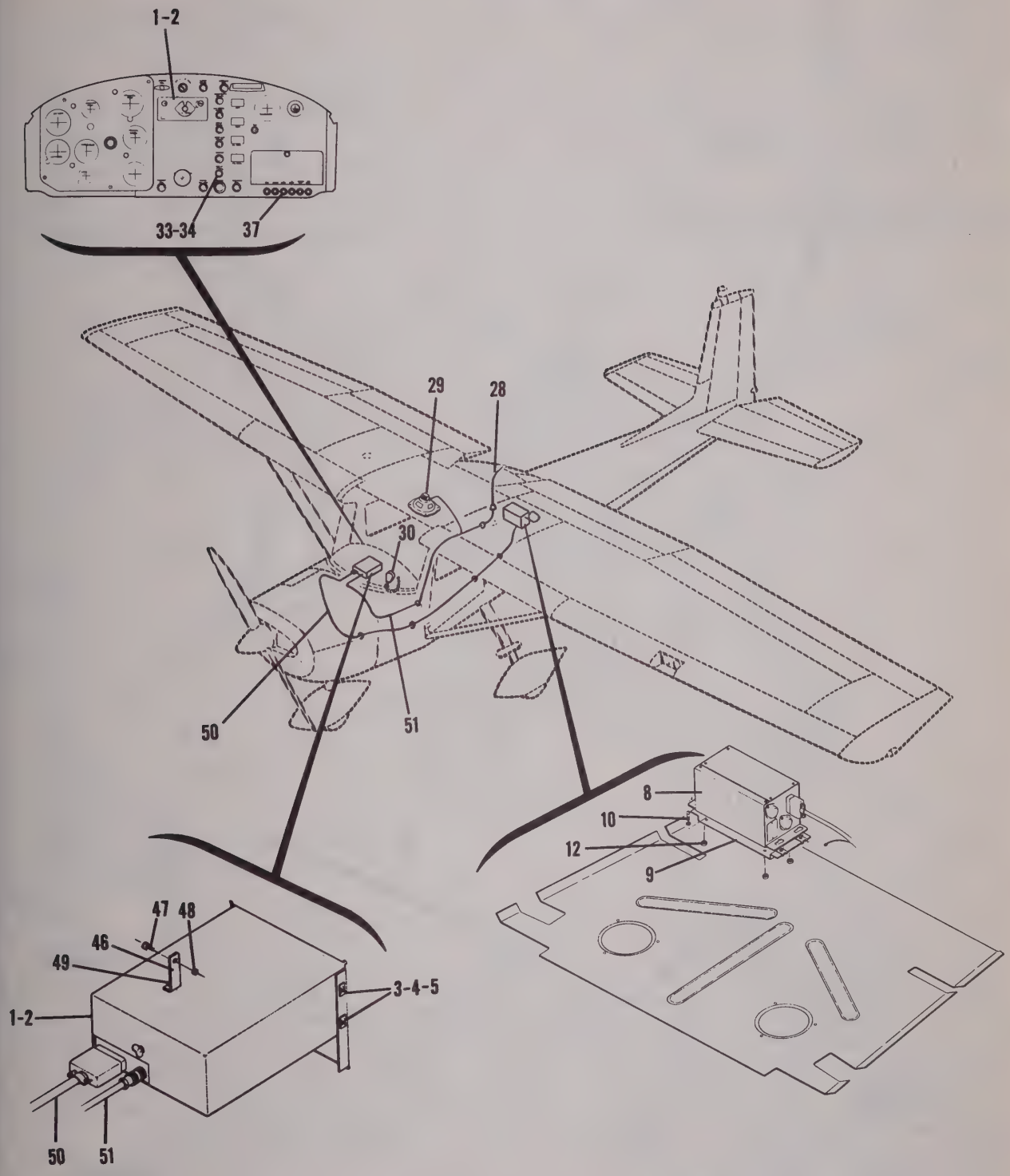


## 150 SERIAL 15060088 & ON

Figure 3-1. King KY-90 or KY-95 Radio Installation - Sheet 2

KING KY-90 OR KY-95 RADIO INSTALLATION

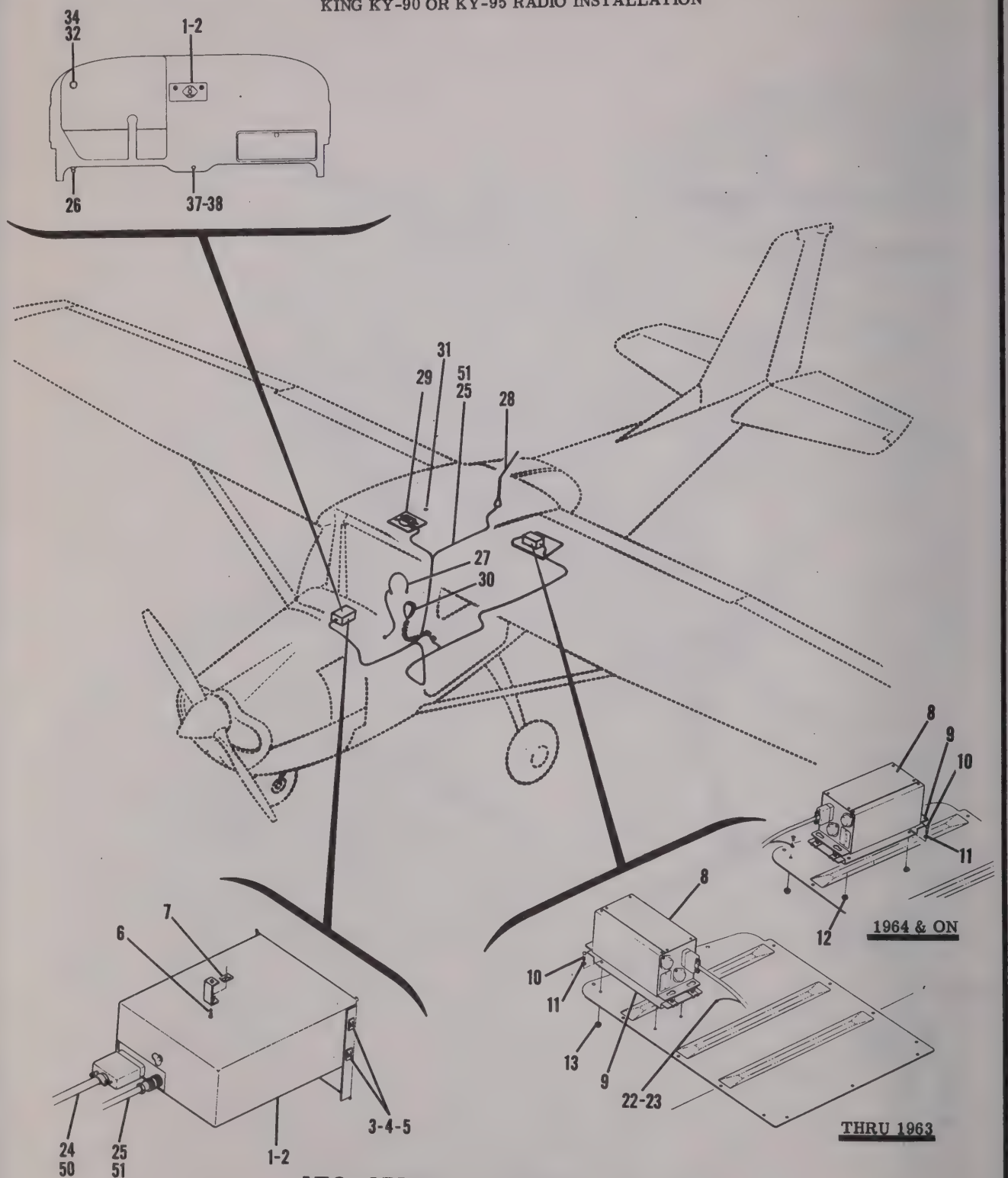


172 SERIAL 17249545 & ON
P172 SERIAL P17257120 & ON

Figure 3-1. King KY-90 or KY-95 Radio Installation - Sheet 3

KING KY-90 OR KY-95 RADIO INSTALLATION

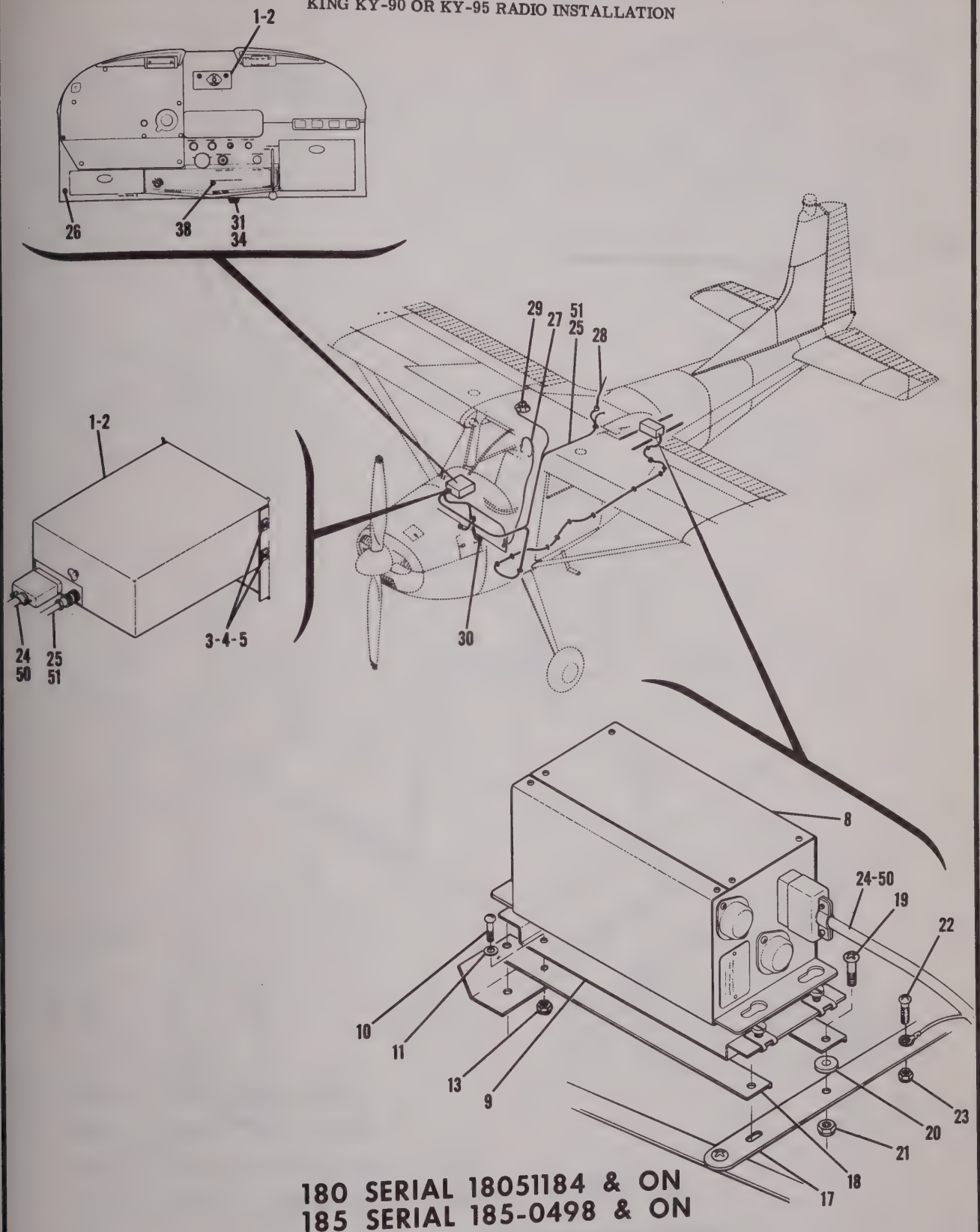


180 SERIAL 18051184 & ON
185 SERIAL 185-0498 & ON

Figure 3-1. King KY-90 or KY-95 Radio Installation - Sheet 4

KING KY-90 OR KY-95 RADIO INSTALLATION

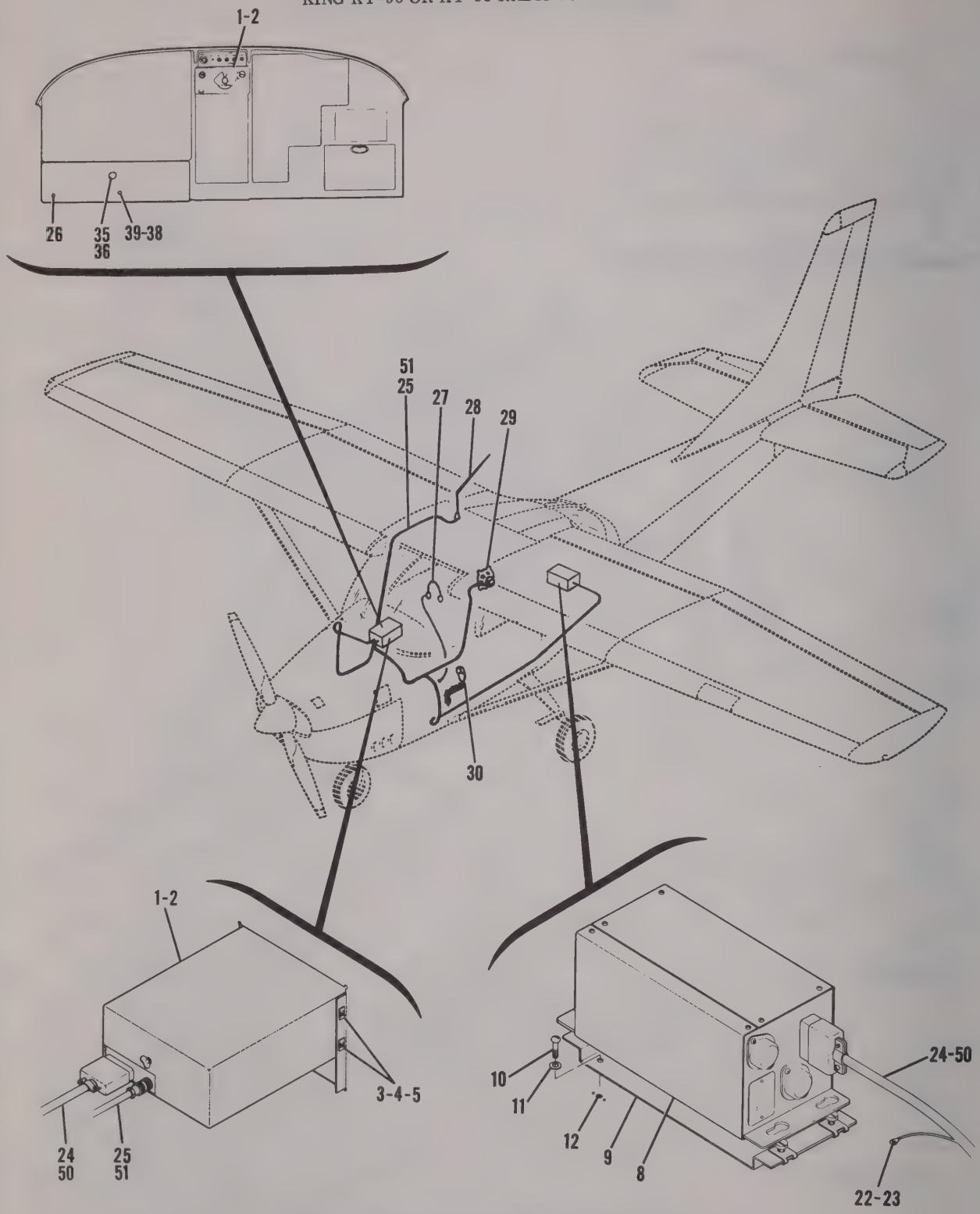


## 182 SERIAL 18254347 & ON

Figure 3-1. King KY-90 or KY-95 Radio Installation - Sheet 5

KING KY-90 OR KY-95 RADIO INSTALLATION

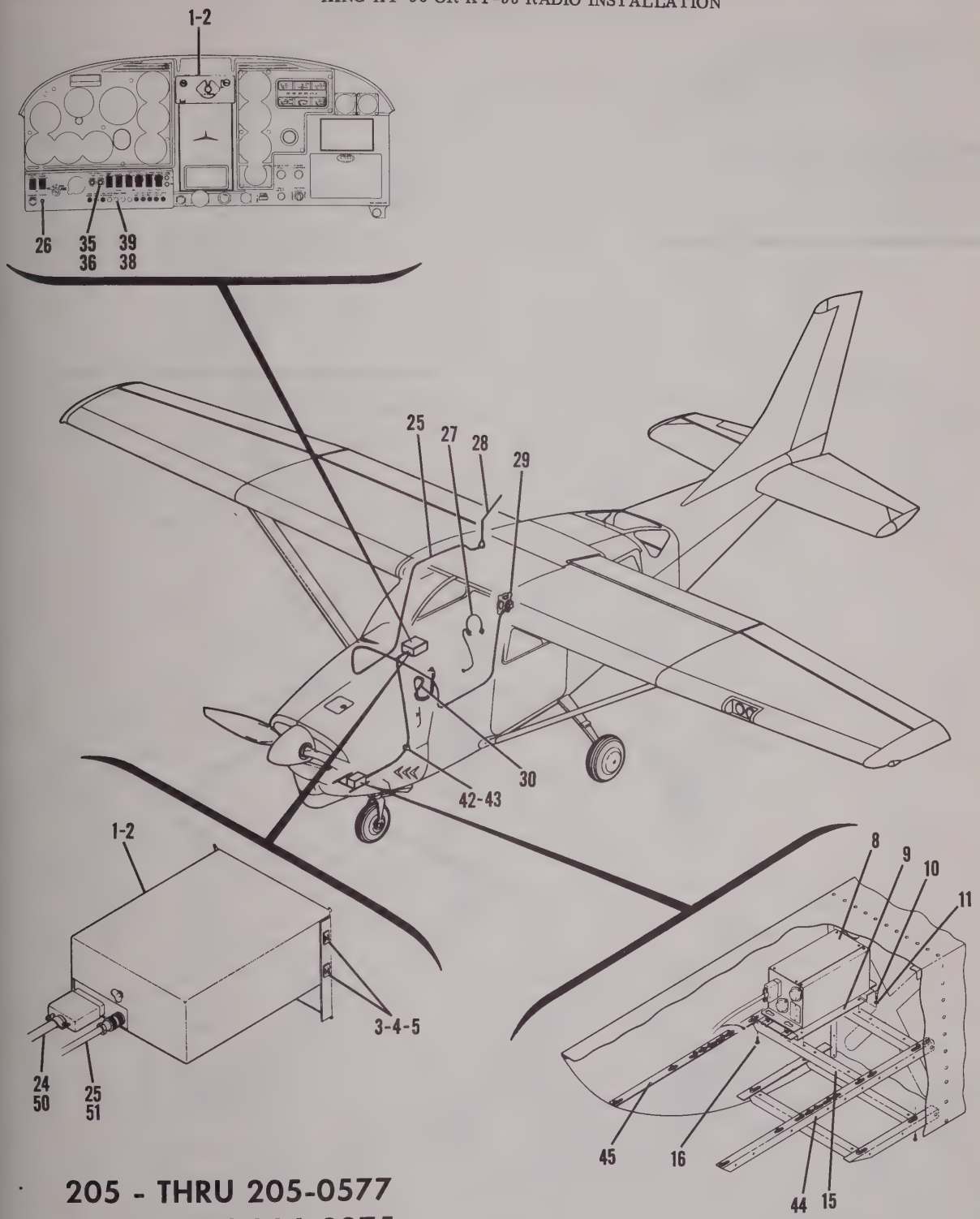


**205 - THRU 205-0577**
**206 - THRU 206-0275**
**P206 SERIAL P206-0001 & ON**
**U206 SERIAL U206-0276 & ON**

Figure 3-1. King KY-90 or KY-95 Radio Installation - Sheet 6

KING KY-90 OR KY-95 RADIO INSTALLATION

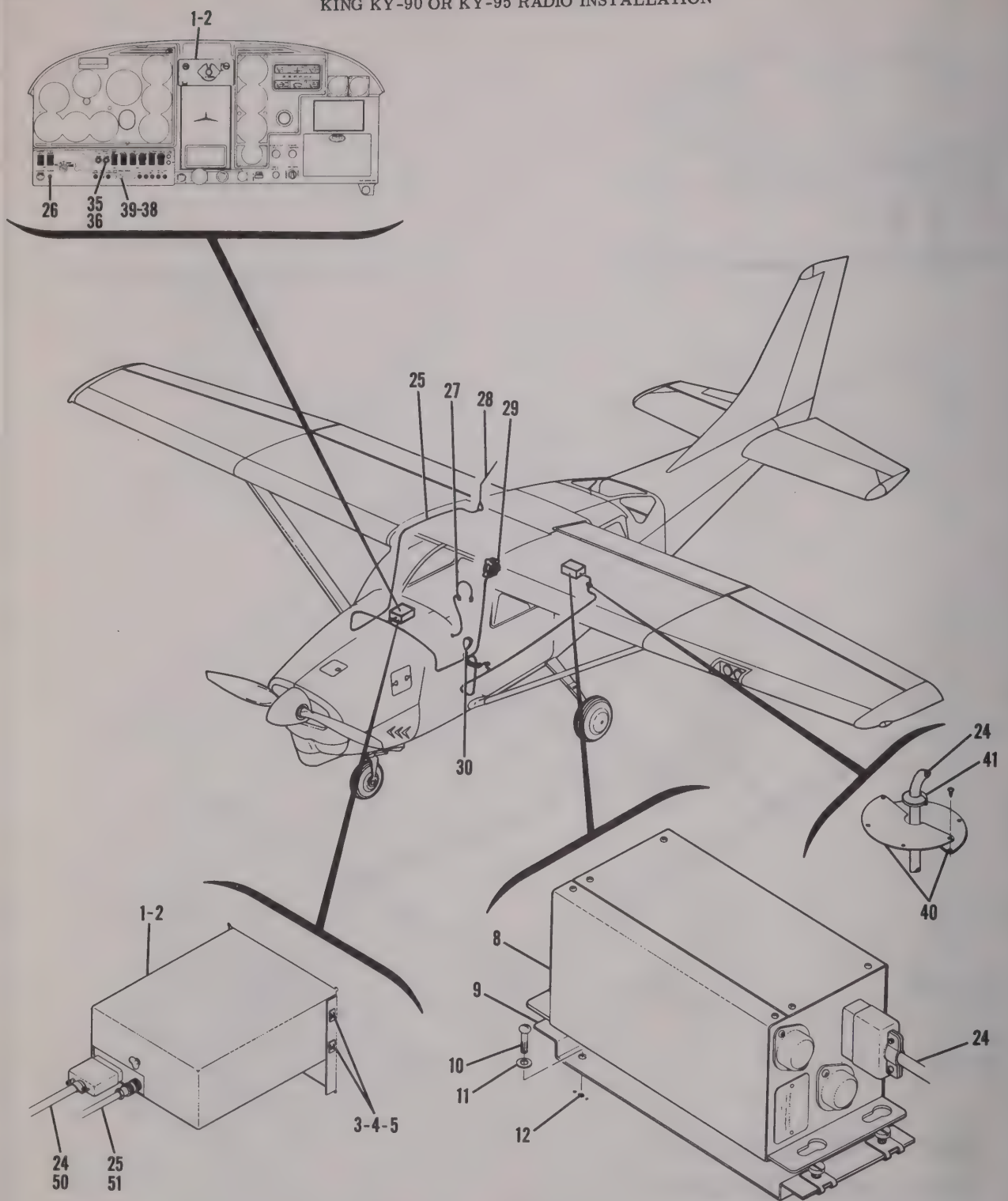


## 210 SERIAL 21058111 & ON

Figure 3-1. King KY-90 or KY-95 Radio Installation - Sheet 7

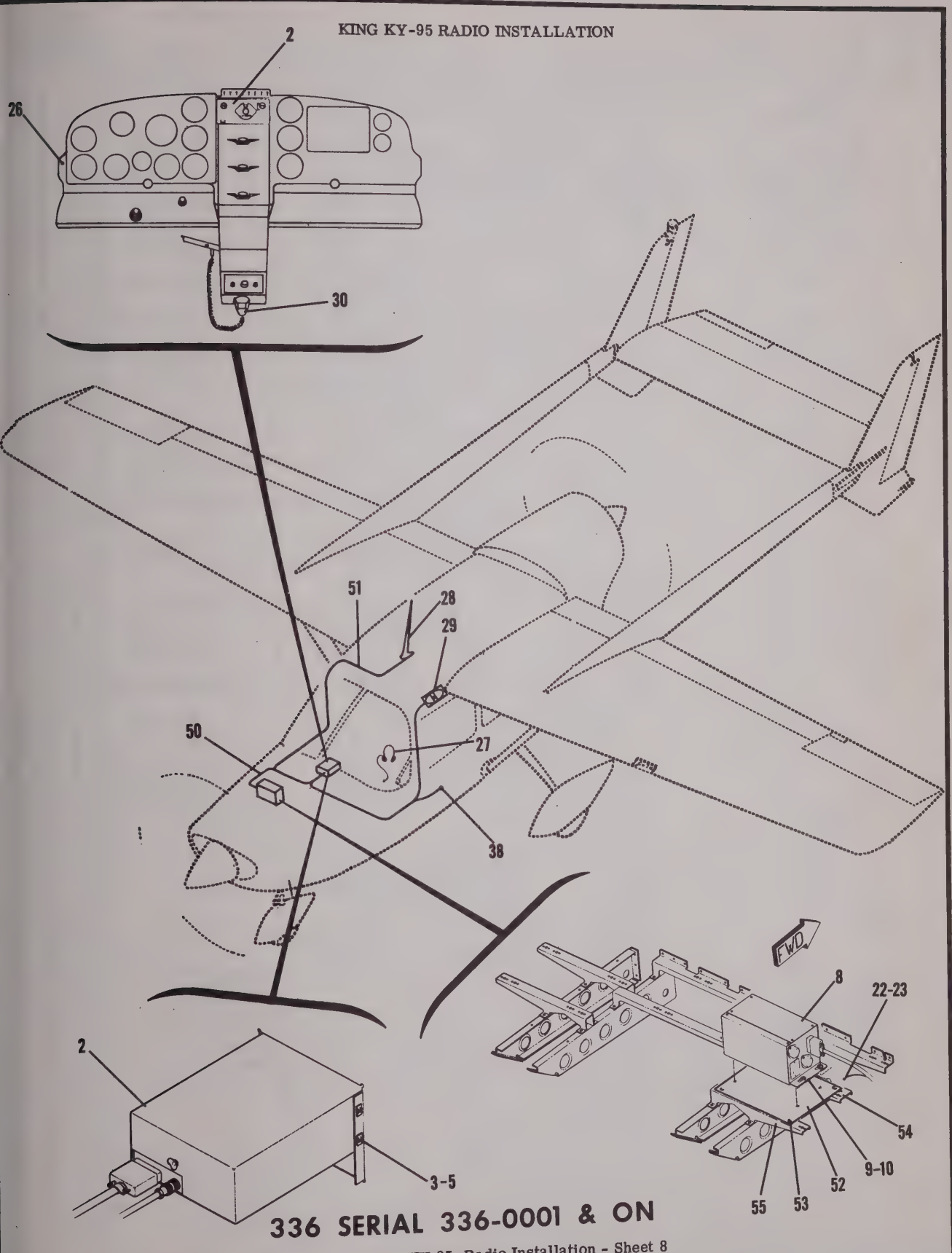


Figure 3-1. King KY-95 Radio Installation - Sheet 8

| FIGURE AND INDEX NO. | PART NUMBER | DESCRIPTION<br>1 2 3 4 5 6 7 | UNITS PER ASSY | USABLE ON CODE |
|---|---|---|---|---|
| 3-1- | | RADIO INSTALLATION-KING KY-90 OR KY-95---------- | NP | |
| - 1 | KY-90 | * TRANSCEIVER NOT USED WHEN KY-95 IS REQUIRED---------- | 1 | |
| - 2 | KY-95 | * TRANSCEIVER NOT USED WHEN KY-90 IS REQUIRED---------- | 1 | |
| | | ATTACHING PARTS | | |
| - 3 | S1021Z6-6 | SCREW ALL MODEL EXCEPT 336---------- | 4 | |
| | AN515-6R6 | SCREW 336 ONLY---------- | 4 | |
| - 4 | AN960-6L | WASHER ALL MODEL EXCEPT 336---------- | 4 | |
| - 5 | NAS446-2-3 | NUT ALL MODEL EXCEPT 336---------- | 4 | |
| | NAS697A06L | NUTPLATE 336 ONLY---------- | 4 | |
| - 6 | S1021Z6-6 | SCREW 172 & P172 ONLY---------- | A/R | |
| - 7 | NAS395-3-3 | NUT 172 & P172 ONLY---------- | A/R | |
| | | ---*--- | | |
| - 8 | KS-501A | * POWER SUPPLY 12 VOLT SYSTEM---------- | 1 | |
| | KS-501A | * POWER SUPPLY 24 VOLT SYSTEM---------- | 1 | |
| | | ATTACHING PARTS | | |
| - 9 | 047-1010-00 | * MOUNTING BASE---------- | 1 | |
| - 10 | AN515-8R-16 | SCREW ALL MODELS AND 1964 150 AND ON---------- | 4 | |
| | AN515-8R6 | SCREW 336 ONLY---------- | 4 | |
| - 11 | AN936A8 | WASHER ALL MODEL EXCEPT 150 & 336---------- | 4 | |
| - 12 | A8K75 | RIVNUT-----182 & 210 ALL MODELS- 150 & 172 1964 & ON------ | 4 | |
| - 13 | MS20365-832C | NUT 180, 185, 205, 206, P206 & U206 - 172 & P172------ | 4 | |
| | | THRU 1963 ONLY | | |
| - 14 | S1021Z6-6 | SCREW 150 THRU 1963 ONLY---------- | 4 | |
| | NAS443-2-3 | NUT 150 THRU 1963 ONLY---------- | 4 | |
| | | ---*--- | | |
| - 15 | 1270627-71 | ATTACH ANGLE 205, 206, P206 & U206 ONLY---------- | 2 | |
| | | ATTACHING PARTS | | |
| - 16 | AN520-10R6 | SCREW-ALTERNATE IS AN-3A BOLT TO BE USED WHEN INSTALLATION | 4 | |
| | | CLEARANCE IS LIMITED | | |
| | | ---*--- | | |
| - 17 | 0770049-1 | ANGLE-INBOARD 180 & 185 ONLY---------- | 1 | |
| - 18 | 0511030-7 | ANGLE 180 & 185 ONLY---------- | 1 | |
| | | ATTACHING PARTS | | |
| - 19 | AN515-8R10 | SCREW---------- | 4 | |
| - 20 | S355 | SPACER---------- | 4 | |
| - 21 | MS20365-832C | NUT ---------- | 4 | |
| | | ---*--- | | |
| - 22 | AM515-8R6 | SCREW GROUND ATTACHMENT---------- | 1 | |
| - 23 | MS20365-832C | NUT GROUND ATTACHMENT---------- | 1 | |
| - 24 | | CABLE ASSY-TRANSCEIVER TO POWER SUPPLY ALL MODELS----- | NP | |
| | | PRIOR TO 1964 | | |
| | 030-2000-00 | * RECEPTACLE-POWER SUPPLY END---------- | 1 | |
| | 092-0003-00 | * HOOD-POWER SUPPLY END---------- | 1 | |
| | 030-2002-00 | * RECEPTACLE-TRANSCEIVER END---------- | 1 | |
| | 092-0004-00 | * HOOD-TRANSCEIVER END---------- | 1 | |
| - 25 | | CABLE ASSY-TRANSCEIVER TO XMITTING ANT ALL MODELS EXCEPT | NP | |
| | | 336 PRIOR TO 1964. | | |
| | RG-58A/U | COAXIAL CABLE-BULK ITEM---------- | A/R | |
| | UG-913/U | PLUG-COAXIAL-RT ANGLE ALL EXCEPT 150, 172 & P172---- | 1 | |
| | UG-88C/U | PLUG-COAXIAL 150, 172 & P172 ONLY---------- | 1 | |
| | AMP31889 | TERMINAL 2 REQD ON 150, 172 & P172 MODELS---------- | 1 | |
| | AMP31902 | TERMINAL ALL MODELS EXCEPT 150, 172 & P172---------- | 1 | |
| - 26 | S1103-1 | PHONE JACK ALL MODELS EXCEPT 150---------- | 1 | |
| - 27 | 0770039-1 | HEADSET ALL MODELS EXCEPT 150 | | |
| - 28 | | VHF ANTENNA INSTALLATION SEE FIGURE 8-1---------- | 1 | |
| - 29 | | SPEAKER INSTALLTION SEE FIGURE 9-3---------- | 1 | |
| - 30 | | MICROPHONE INSTALLATION SEE FIGURE 9-4---------- | 1 | |
| | | RADIO NOISE FILTERS SEE FIGURE 10-5---------- | A/R | |
| | | DROPPING RESISTOR-FLT INST & RADIO DIAL LT 336 ONLY--- | 1 | |
| | | SEE FIGURE 10-2 | | |
| - 31 | 0413126-5 | RHEOSTAT 180 & 185 ALL MODELS & 172 1964 & ON--------- | 1 | |
| - 32 | 0413126-9 | RHEOSTAT 172 & P172 ONLY THRU 1963---------- | 1 | |
| - 33 | 0413126-6 | RHEOSTAT 150 ONLY---------- | 1 | |
| - 34 | 0413126-3 | KNOB-RHEOSTAT 150, 172, P172, 180 & 185 ONLY---------- | 1 | |
| - 35 | R-12 1/2-75-RS34 | RHEOSTAT 182, 205, 206, P206 & 210 ONLY---------- | 1 | |
| - 36 | S1163-2 | KNOB-RHEOSTAT 182, 205, 206, P206, U206 & 210 ONLY---- | 1 | |

CONTINUED ON NEXT PAGE

| FIGURE AND INDEX NO. | PART NUMBER | DESCRIPTION<br>1 2 3 4 5 6 7 | UNITS PER ASSY | USABLE ON CODE |
|---|---|---|---|---|
| 3-1- 37 | S1090-4 | FUSE HOLDER ASSY 150 ONLY-172 & P172 THRU 1963-------- | 1 | |
| | S1090-13 | CAP-15A 150 ONLY-172 AND P172 THRU 1963---------- | 1 | |
| | S1091-15 | FUSE 150 ONLY-172 & P172 THRU 1963---------- | 1 | |
| - 38 | S1360-15 | CIRCUIT BREAKER ALL MODELS EXCEPT 150 & 336 MODELS-1964 AND ON | 1 | |
| | S1360-5 | CIRCUIT BREAKER 336 ONLY---------- | 1 | |
| | PSM-15N | CIRCUIT BREAKER 180 & 185 THRU 1963---------- | 1 | |
| - 39 | S1232-10 | CIRCUIT BREAKER 182,205 & 210 THRU 1963---------- | 1 | |
| - 40 | S1261-1 | COVER PLATE THRU 1963 210 MODELS ONLY---------- | 2 | |
| - 41 | MS35489-S19 | GROMMET THRU 1963 210 MODELS ONLY---------- | 1 | |
| - 42 | 1213614-6 | COVER PLATE 205, 206, P206 & U206 ONLY---------- | 1 | |
| - 43 | NAS557-8A | GROMMET 205, 206, P206 & U206 ONLY---------- | 1 | |
| - 44 | 1270627-85 | SIDE ANGLE ASSY L.H.-STD EQUIP ON AFCT 205, 206, P206, AND U206 ONLY | 1 | |
| - 45 | 1270627-86 | SIDE ANGLE ASSY R.H.-STD EQUIP ON AFCT 205, 206, P206- AND U206 ONLY | 1 | |
| - 46 | 0570004-1 | STRAP 150 ONLY 1964 AND ON---------- | 1 | |
| | | ATTACHING PARTS | | |
| - 47 | S1021Z8-8 | SCREW---------- | 2 | |
| - 48 | NAS446-4-3 | NUT-ATTACHES TO CHANNEL FLANGE---------- | 1 | |
| - 49 | NAS395-14-3 | NUT-ATTACHES TO DUST COVER---------- | 1 | |
| | | ---*--- | | |
| - 50 | | CABLE ASSY-TRANSCEIVER TO POWER SUPPLY ALL MODELS----- 1964 AND ON | N/P | |
| | 030-2000-00 | * RECEPTACLE-POWER SUPPLY END---------- | 1 | |
| | 030-1009-00 | * HOOD-POWER SUPPLY END---------- | 1 | |
| | 030-1008-00 | * LEVER & PIVOT ASSY-POWER SUPPLY END & TRANSCEIVER------- | 2 | |
| | 030-2002-00 | * RECEPTACLE-TRANSCEIVER END---------- | 1 | |
| | 030-1010-00 | * HOOD-TRANSCEIVER END---------- | 1 | |
| - 51 | | CABLE ASSY-TRANSCEIVER TO VHF BROADBAND XMITTING ANT ALL MODELS 1964 AND ON | N/P | |
| | RG-58A/U | COAXIAL CABLE-BULK ITEM---------- | A/R | |
| | UG-913/U | PLUG-COAXIAL 180, 182, 185, 205, 206, P206, U206---- AND 210 ONLY | 2 | |
| | UG-88C/U | PLUG-COAXIAL 180, 172, P172 & 336 ONLY---------- | 2 | |
| - 52 | 1470111-1 | MOUNTING PLATE ASSY 336 ONLY---------- | 1 | |
| | | ATTACHING PARTS | | |
| - 53 | AN520-10R6 | SCREW---------- | 3 | |
| | AN515-8R6 | SCREW---------- | 1 | |
| | | ---*--- | | |
| - 54 | 1470056-4 | SUPPORT ASSY 336 ONLY---------- | 1 | |
| | | ATTACHING PARTS | | |
| | AN515-8R6 | SCREW---------- | 4 | |
| | NAS679A08 | NUT ---------- | 4 | |
| | | ---*--- | | |
| - 55 | 1470053-7 | SUPPORT ASSY 336 ONLY---------- | 1 | |
| | | ATTACHING PARTS | | |
| | AN515-8R6 | SCREW---------- | 4 | |
| | NAS679A08 | NUT ---------- | 4 | |
| | | ---*--- | | |

* ITEMS MARKED WITH ASTERISK SUPPLIED WHEN COMPLETE RADIO IS PURCHASED

KING KX-100 OR KX-120 RADIO INSTALLATION

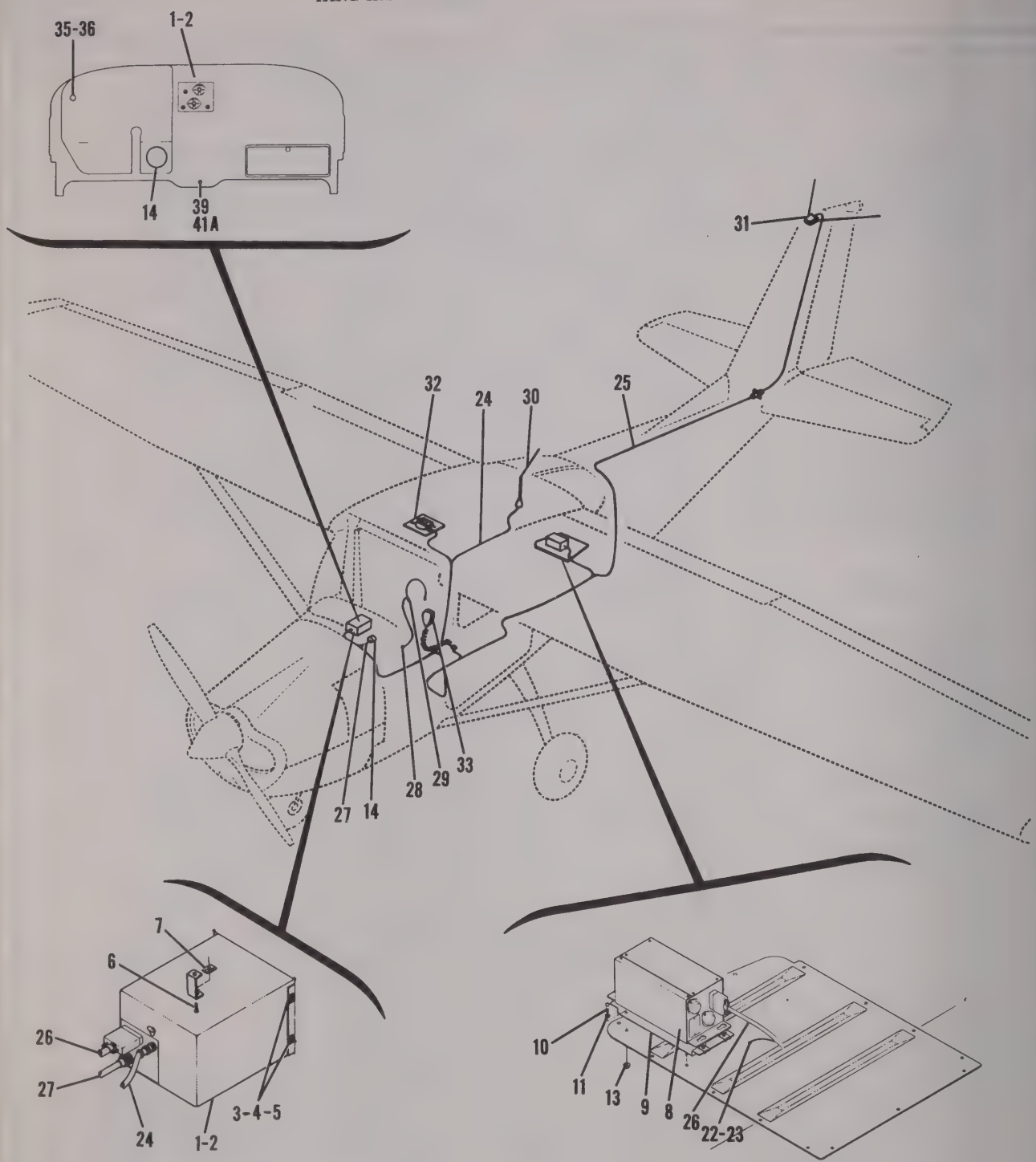


## P172 SERIAL P17257120 THRU P17257188
## 172 SERIAL 17249545 THRU 17253392

Figure 3-2. King KX-100 or KX-120 Radio Installation (Sheet 1 of 5)

KING KX-100 OR KX-120 RADIO INSTALLATION

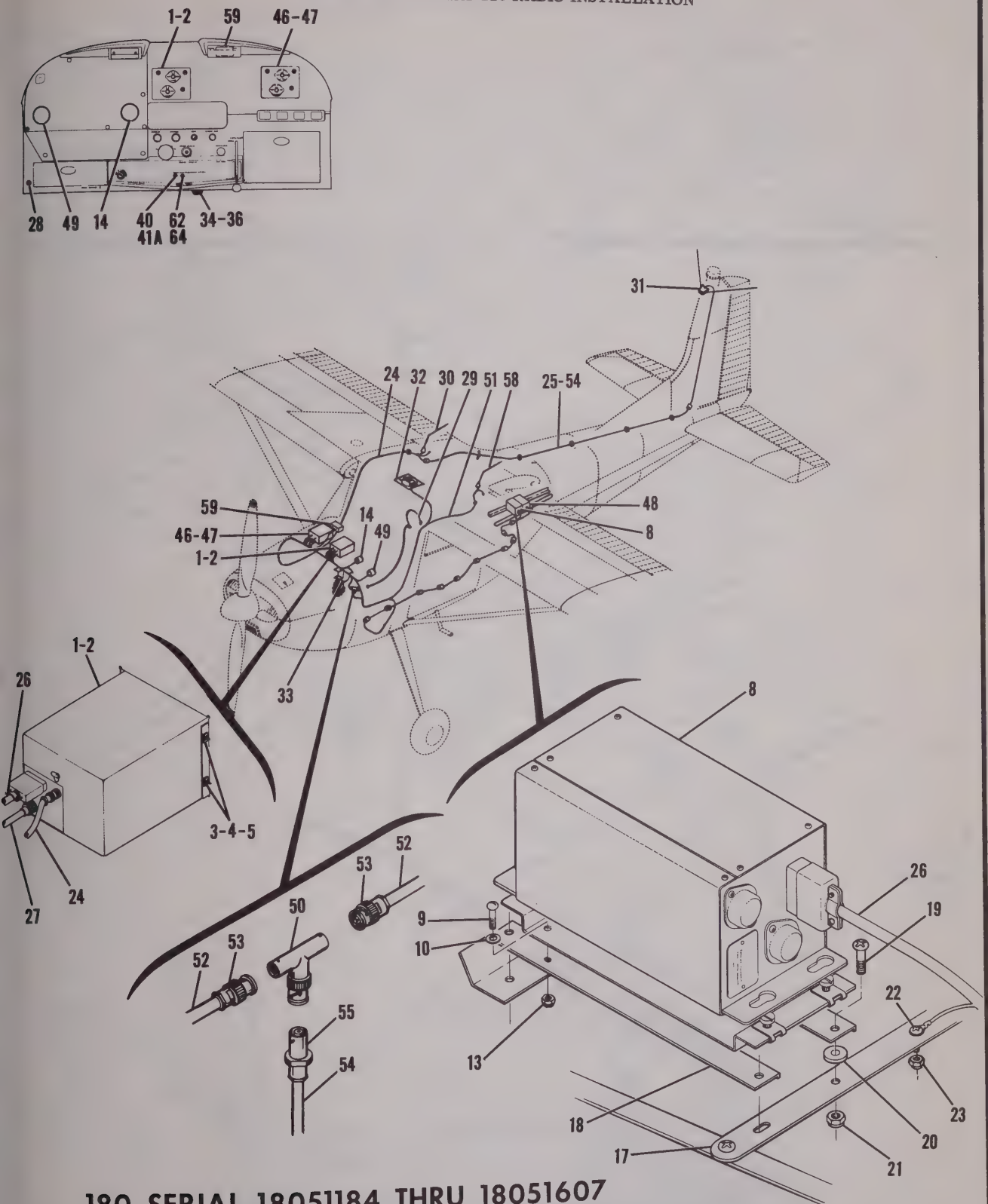


**180 SERIAL 18051184 THRU 18051607**
**185 SERIAL 185-0498 THRU 185-0967**

Figure 3-2. King KX-100 or KX-120 Radio Installation (Sheet 2 of 5)

KING KX-100 OR KX-120 RADIO INSTALLATION

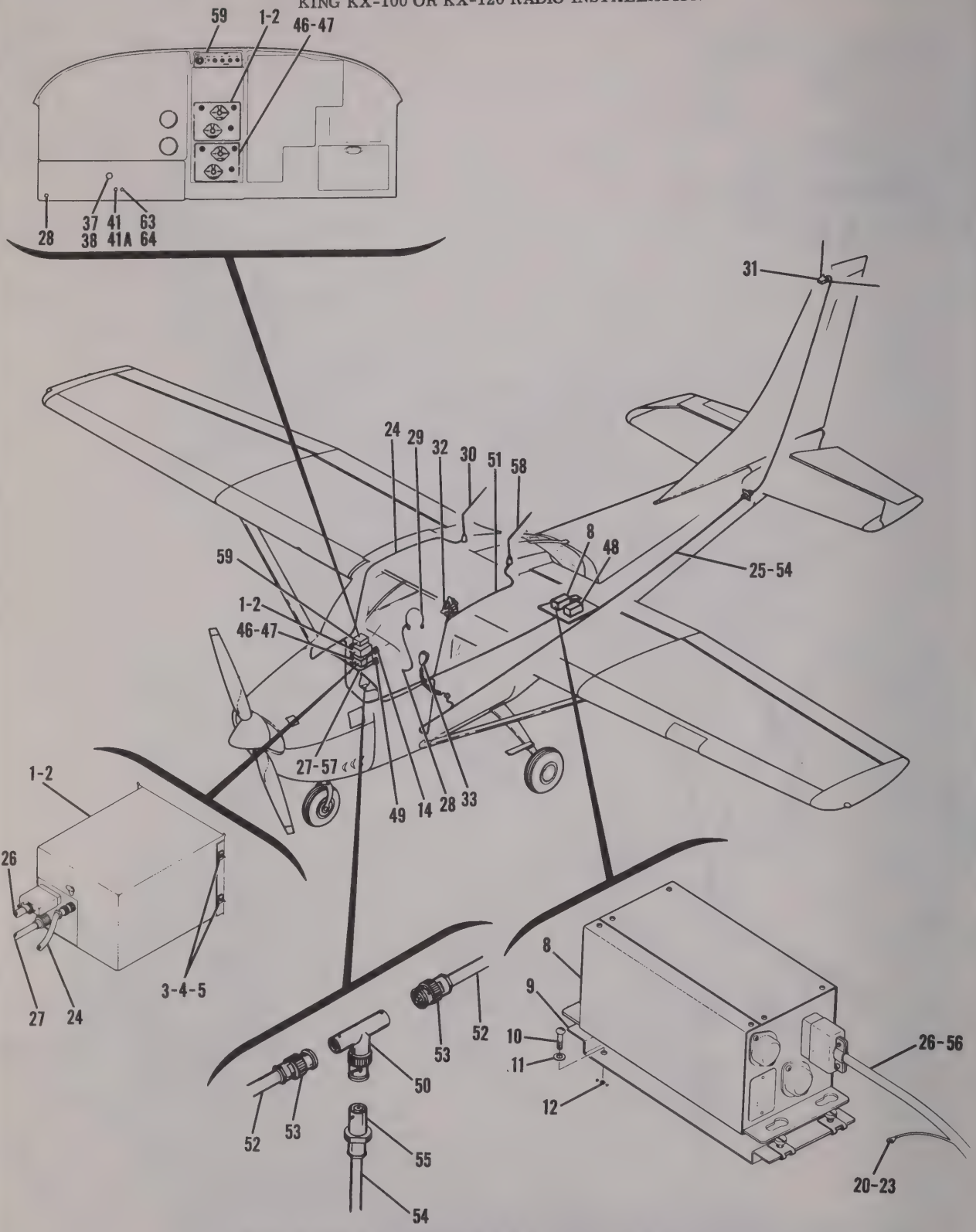


182 SERIAL 18254347 THRU 18256684

Figure 3-2. King KX-100 or KX-120 Radio Installation (Sheet 3 of 5)

KING KX-100 OR KX-120 RADIO INSTALLATION

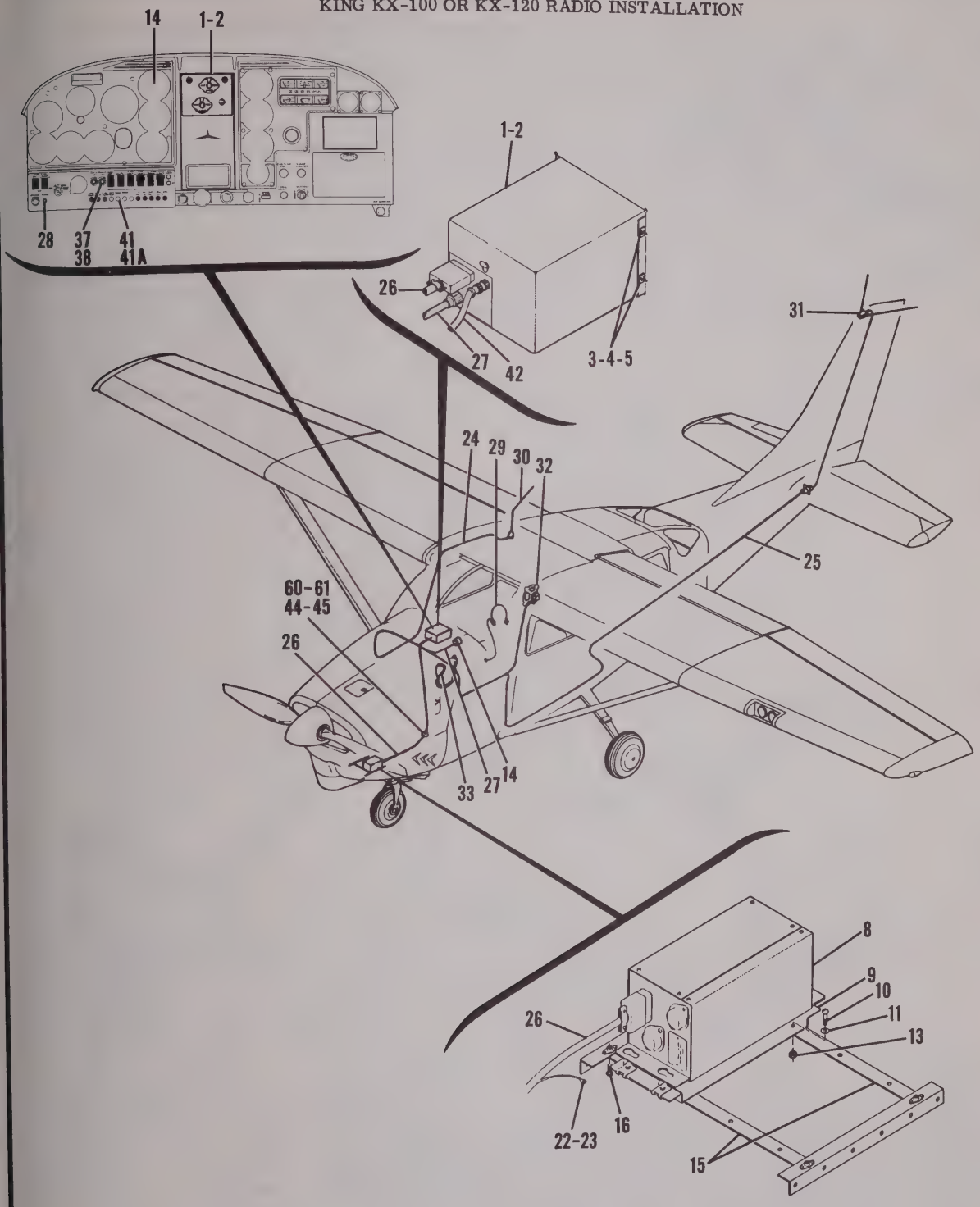


**205 SERIAL 205-0001 THRU 205-0577**
**206 SERIAL 206-0001 THRU 206-0275**
**P206 SERIAL P206-0001 THRU P206-0160**
**U206 SERIAL U206-0276 THRU U206-0437**

Figure 3-2. King KX-100 or KX-120 Radio Installation (Sheet 4 of 5)

KING KX-100 OR KX-120 RADIO INSTALLATION

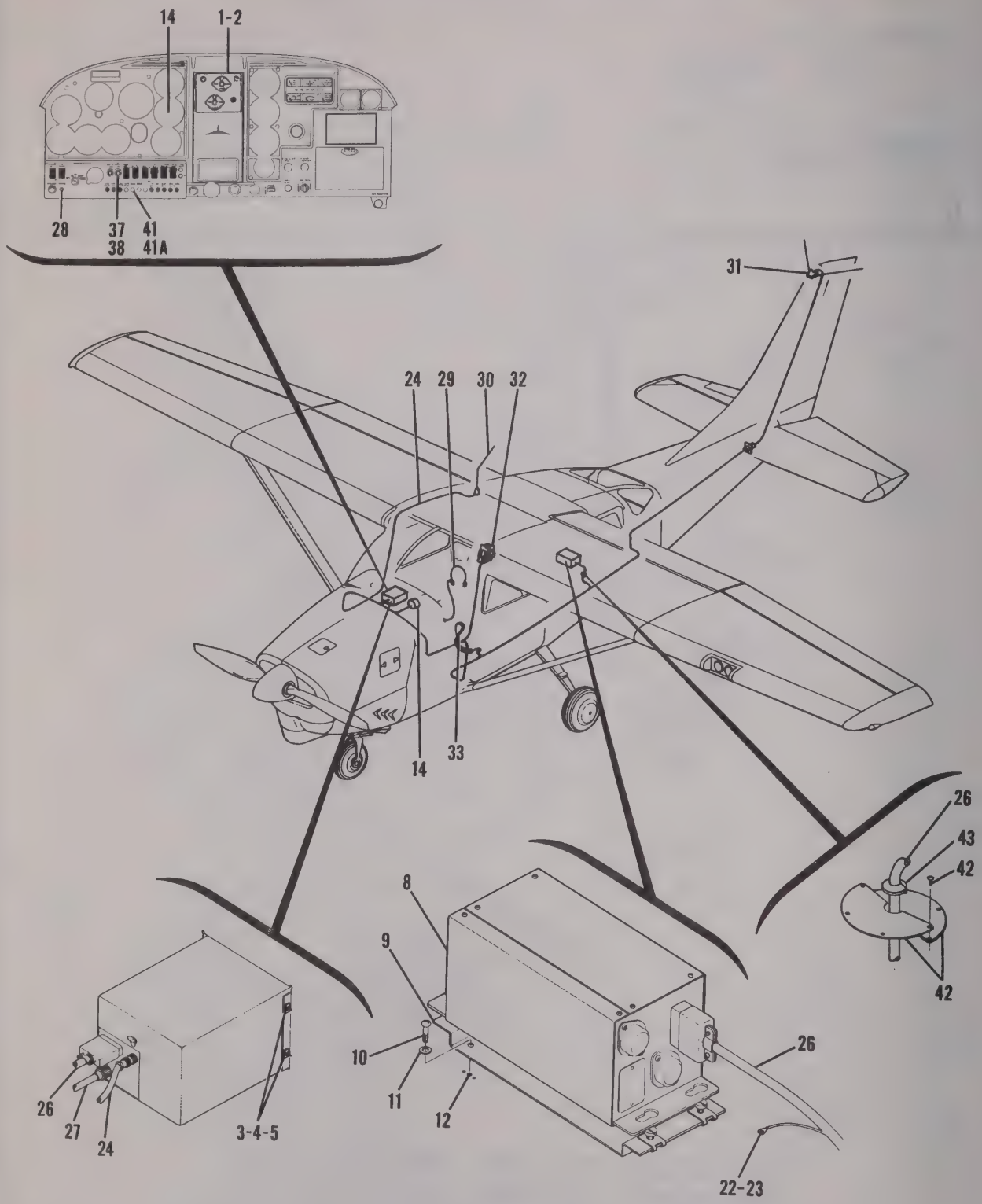


## 210 SERIAL 21058111 THRU 21058715

Figure 3-2. King KX-100 or KX-120 Radio Installation (Sheet 5 of 5)

| FIGURE AND INDEX NO. | PART NUMBER | DESCRIPTION<br>1 2 3 4 5 6 7 | UNITS PER ASSY | USABLE ON CODE |
|---|---|---|---|---|
| 3-2- | | RADIO INSTALLATION-KING KX-100 OR KX-120---------- | NP | |
| - 1 | KX-100 | * TRANSCEIVER NOT USED WHEN KX-120 IS REQUIRED---------- | 1 | |
| - 2 | KX-120 | * TRANSCEIVER NOT USED WHEN KX-100 IS REQUIRED---------- | 1 | |
| | | ATTACHING PARTS | | |
| - 3 | S1021Z6-6 | SCREW---------- | 4 | |
| - 4 | AN960-6L | WASHER---------- | 4 | |
| - 5 | NAS446-2-3 | NUT ---------- | 4 | |
| - 6 | S1021Z6-6 | SCREW 172 & P172 ONLY THRU 1963 ONLY---------- | 1 | |
| - 7 | NAS395-3-3 | NUT 172 & P172 ONLY THRU 1963 ONLY---------- | 1 | |
| | | ---*--- | | |
| - 8 | KS-501A | * POWER SUPPLY---------- | 1 | |
| | | ATTACHING PARTS | | |
| - 9 | 047-1010-00 | MOUNTING BASE---------- | 1 | |
| - 10 | AN515-8R-16 | SCREW---------- | 4 | |
| - 11 | AN936A8 | WASHER---------- | 4 | |
| - 12 | A8K75 | RIVNUT 182 & 210 ONLY---------- | 4 | |
| - 13 | MS20365-832C | NUT 172, P172, 180, 185, 205 AND 206 ONLY---------- | 4 | |
| | | ---*--- | | |
| - 14 | KI-200 | INDICATOR---------- | 1 | |
| | | ATTACHING PARTS | | |
| | AN515B6R10 | SCREW---------- | 3 | |
| | | ---*--- | | |
| -14A | 1270627-85 | SIDE ANGLE ASSY LH 205 AND 206 ONLY---------- | 1 | |
| -14B | 1270627-86 | SIDE ANGLE ASSY RH 205 AND 206 ONLY---------- | 1 | |
| - 15 | 1270627-71 | ATTACH ANGLE 205 AND 206 ONLY---------- | 2 | |
| | | ATTACHING PARTS | | |
| - 16 | AN520-10R6 | SCREW ALTERNATE IS AN-3A BOLT TO BE USED WHEN INSTALLATION CLEARANCE IS LIMITED | 1 | |
| | | ---*--- | | |
| - 17 | 0770049-1 | ANGLE 180 & 185 ONLY---------- | 1 | |
| - 18 | 0511030-7 | ANGLE 180 & 185 ONLY---------- | 2 | |
| | | ATTACHING PARTS | | |
| - 19 | AN515-8R10 | SCREW---------- | 4 | |
| - 20 | S355 | SPACER---------- | 4 | |
| - 21 | MS20365-832C | NUT ---------- | 4 | |
| | | ---*--- | | |
| - 22 | AN515-8R6 | SCREW GND WIRE ATTACHMENT---------- | 1 | |
| - 23 | MS20365-832C | NUT GND WIRE ATTACHMENT---------- | 1 | |
| - 24 | | CABLE ASSY-TRANSCEIVER TO VHF ANTENNA---------- | NP | |
| | RG-58A/U | COAXIAL CABLE-BULK ITEM---------- | AR | |
| | UG-913/U | PLUG-RIGHT ANGLE-COAXIAL TWO REQD WHEN USED---------- | 1 | |
| | | WITH 1470053-1 ANT ASSY AND ONE REQD | | |
| | | WHEN USED WITH 1270042-1 ANT ASSY | | |
| | AMP-31889 | TERMINAL-USED WITH 1270042-1 ANT ASSY---------- | 1 | |
| | AMP-31902 | TERMINAL-USED WITH 1270042-1 ANT ASSY---------- | 1 | |
| - 25 | | CABLE ASSY-TRANSCEIVER TO BALUN STUB---------- | NP | |
| | RG-58A/U | COAXIAL CABLE-BULK ITEM---------- | AR | |
| | PC500B | * PLUG-COAXIAL---------- | 1 | |
| | UG-88C/U | * PLUG-COAXIAL---------- | 1 | |
| - 26 | | CABLE ASSY-TRANSCEIVER TO POWER SUPPLY & AUDIO HOOK-UP---- | NP | |
| | 030-2002-00 | * PLUG RECEIVER END---------- | 1 | |
| | 092-0004-00 | * HOOD RECEIVER END---------- | 1 | |
| | 030-2000-00 | * PLUG POWER SUPPLY END---------- | 1 | |
| | 092-0003-00 | * HOOD POWER SUPPLY END---------- | 1 | |
| - 27 | | CABLE ASSY-TRANSCEIVER TO INDICATOR---------- | NP | |
| | 12-195 | * PLUG TRANSCEIVER END---------- | 1 | |
| | MS3106A10SL-3S | * RECEPTACLE INDICATOR END INACTIVE KING---------- | 1 | |
| | | SERIAL 3261 & ON | | |
| | 030-2038-00 | * RECEPTACLE INDICATOR END---------- | 1 | |
| | | KING SERIAL 3261 & ON | | |
| - 28 | S1103-1 | PHONE JACK---------- | 1 | |
| - 29 | 0770039-1 | HEADSET---------- | 1 | |
| - 30 | | VHF ANTENNA INSTALLATION SEE FIGURE 8-1---------- | 1 | |
| - 31 | | OMNI ANTENNA INSTALLATION SEE FIGURE 8-2---------- | 1 | |
| - 32 | | SPEAKER INSTALLATION SEE FIGURE 9-3---------- | 1 | |
| - 33 | | MICROPHONE INSTALLATION SEE FIGURE 9-4---------- | A/R | |
| | | RADIO NOISE FILTER INSTALLATION SEE FIGURE 10-5-------- | 1 | |
| | | RADIO COOLING INSTALLATION SEE FIGURE 10-1---------- | 1 | |
| - 34 | 0413126-5 | RHEOSTAT ALL 180 AND 185 MODELS AND 172 1964 AND ON--- | 1 | |
| - 35 | 0413126-9 | RHEOSTAT 172 AND P172 THRU 1963 ONLY---------- | 1 | |
| - 36 | 0413126-3 | KNOB-RHEOSTAT 172, P172, 180 & 185 ONLY---------- | 1 | |

CONTINUED ON NEXT PAGE

| FIGURE AND INDEX NO. | PART NUMBER | DESCRIPTION 1 2 3 4 5 6 7 | UNITS PER ASSY | USABLE ON CODE |
|---|---|---|---|---|
| 3-2- 37 | R-12 1/2-75-RS34 | RHEOSTAT 182, 205, 206 AND 210 ONLY | 1 | |
| - 38 | S1163-2 | KNOB-RHEOSTAT 182, 205, 206 AND 210 ONLY | 1 | |
| - 39 | S1090-4 | FUSE HOLDER 172 AND P172 THRU 1963 ONLY | 1 | |
| | S1091-13 | CAP-10A 172 AND P172 THRU 1963 ONLY | 1 | |
| | S1091-15 | FUSE 172 AND P172 THRU 1963 ONLY | 1 | |
| - 40 | PSM-15N | CIRCUIT BREAKER 180 AND 185 THRU 1963 ONLY | 1 | |
| - 41 | S1232-15 | CIRCUIT BREAKER 182, 205, AND 210 THRU 1963 ONLY | 1 | |
| -41A | S1360-15 | CIRCUIT BREAKER ALL MODELS 1964 AND ON | 1 | |
| - 42 | S1261-1 | COVER PLATE 210 THRU 1963 ONLY | 2 | |
| - 43 | MS35489-S19 | GROMMET 210 THRU 1963 ONLY | 1 | |
| - 44 | 1213614-6 | COVER PLATE 205 AND 206 ONLY | 1 | |
| - 45 | NAS557-8A | GROMMET 205 AND 206 ONLY | 1 | |
| | | DUAL RADIO INSTALLATION-THE FOLLOWING PARTS ARE REQUIRED IN ADDITION TO THOSE REQUIRED FOR A SINGLE RADIO INSTALLATION. ITEM 54 REPLACES ITEM 25, ITEM 60 REPLACES ITEM 44 AND ITEM 61 REPLACES ITEM 45 WHEN DUAL RADIOS ARE INSTALLED MODELS 180, 182, 185, 205, 206 AND 210 ONLY | | |
| - 46 | KX-100 | * TRANSCEIVER NOT USED WHEN KX-120 IS REQUIRED | 1 | |
| - 47 | KX-120 | * TRANSCEIVER NOT USED WHEN KX-100 IS REQUIRED | 1 | |
| | | ATTACHING PARTS | | |
| | S1021Z6-6 | SCREW | 4 | |
| | AN960-6L | WASHER | 4 | |
| | NAS446-2-3 | NUT | 4 | |
| | | ---*--- | | |
| - 48 | KS-501A | * POWER SUPPLY | 1 | |
| | | ATTACHING PARTS | | |
| | 047-1010-00 | MOUNTING BASE | 1 | |
| | AN515-8R-16 | SCREW | 4 | |
| | AN936A8 | WASHER | 4 | |
| | A8K75 | RIVNUT 182 & 210 ONLY | 4 | |
| | MS20365-832C | NUT 180, 185, 205 AND 206 ONLY | 4 | |
| | | ---*--- | | |
| - 49 | KJ-200 | INDICATOR | 1 | |
| | | ATTACHING PARTS | | |
| | AN515B6R10 | SCREW | 3 | |
| | | ---*--- | | |
| | 0511030-7 | ANGLE 180 & 185 ONLY | 2 | |
| | | ATTACHING PARTS | | |
| | AN515-8R10 | SCREW | 4 | |
| | S355 | SPACER | 4 | |
| | MS20365-832C | NUT | 4 | |
| | | ---*--- | | |
| | AN515-8R6 | SCREW GND WIRE ATTACHMENT | 1 | |
| | MS20365-832C | NUT GND WIRE ATTACHMENT | 1 | |
| - 50 | UG-274/U | TEE ADAPTER | 1 | |
| - 51 | | CABLE ASSY-TRANSCEIVER TO VHF ANTENNA | NP | |
| | RG-58A/U | COAXIAL CABLE-BULK ITEM | AR | |
| | UG-913/U | PLUG-RIGHT ANGLE-COAXIAL TWO REQD WHEN USED WITH 1470053-1 ANT ASSY AND ONE REQD WHEN USED WITH 1270042-1 ANT ASSY | 1 | |
| | AMP-31889 | TERMINAL-USED WITH 1270042-1 ANT ASSY | 1 | |
| | AMP-31902 | TERMINAL-USED WITH 1270042-1 ANT ASSY | 1 | |
| - 52 | | CABLE ASSY-TRANSCEIVER TO OMNI TEE ADAPTER TWO 33 INCH CABLES REQD | NP | |
| | RG-58A/U | COAXIAL CABLE-BULK ITEM | AR | |
| - 53 | UG-88C/U | PLUG-COAXIAL | 1 | |
| | 13B | PLUG-MOTOROLA TYPE | 1 | |
| - 54 | | CABLE ASSY-OMNI TEE TO BALUN STUB REPLACES ITEM 25 WHEN DUAL RADIOS ARE INSTALLED | NP | |
| | RG-58A/U | COAXIAL CABLE-BULK ITEM | AR | |
| | UG-88C/U | PLUG-COAXIAL | 1 | |
| - 55 | UG-89/U | RECEPTACLE-COAXIAL | 1 | |

CONTINUED ON NEXT PAGE

| FIGURE AND INDEX NO. | PART NUMBER | DESCRIPTION<br>1 2 3 4 5 6 7 | UNITS PER ASSY | USABLE ON CODE |
|---|---|---|---|---|
| 3-2- 56 | | CABLE ASSY-TRANSCEIVER TO POWER SUPPLY & AUDIO HOOK-UP ---- | NP | |
| | 030-2002-00 | * PLUG-----RECEIVER END ---------- | 1 | |
| | 092-0004-00 | * HOOD-----RECEIVER END ---------- | 1 | |
| | 030-2000-00 | * PLUG-----POWER SUPPLY END ---------- | 1 | |
| | 092-0003-00 | * HOOD-----POWER SUPPLY END ---------- | 1 | |
| - 57 | | CABLE ASSY-TRANSCEIVER TO INDICATOR---------- | NP | |
| | 125-195 | * PLUG---------- | 1 | |
| | MS3106A10SL-3S | * RECEPTACLE INDICATOR END-----INACTIVE KING --------- SERIAL 3261 & ON | 1 | |
| | 030-2038-00 | * RECEPTACLE INDICATOR END-----KING SERIAL --------- 3261 & ON | 1 | |
| - 58 | | VHF ANTENNA INSTALLATION SEE FIGURE 8-1 ---------- | 1 | |
| - 59 | | XMTR SELECTOR SW & AUDIO AMPLIFIER SEE FIGURE 9-1 ---- | 1 | |
| - 60 | 1213614-11 | COVER PLATE-----205 AND 206 ONLY REPLACES ITEM 44 WHEN DUAL RADIOS ARE INSTALLED | 1 | |
| - 61 | NAS557-10A | GROMMET 205 AND 206 ONLY REPLACES ITEM 45 WHEN ---- DUAL RADIOS ARE INSTALLED | 1 | |
| - 62 | PSM-15N | CIRCUIT BREAKER 180 AND 185 THRU 1963 ONLY --------- | 1 | |
| - 63 | S1232-15 | CIRCUIT BREAKER 182, 205, 206 AND 210 THRU 1963 ONLY | 1 | |
| - 64 | S1360-15 | CIRCUIT BREAKER 180, 182, 185, 205, 206 AND 210 ---- 1964 AND ON | 1 | |

ITEMS MARKED WITH ASTERISK SUPPLIED WHEN COMPLETE RADIO IS PURCHASED.

KING KX-150 RADIO INSTALLATION

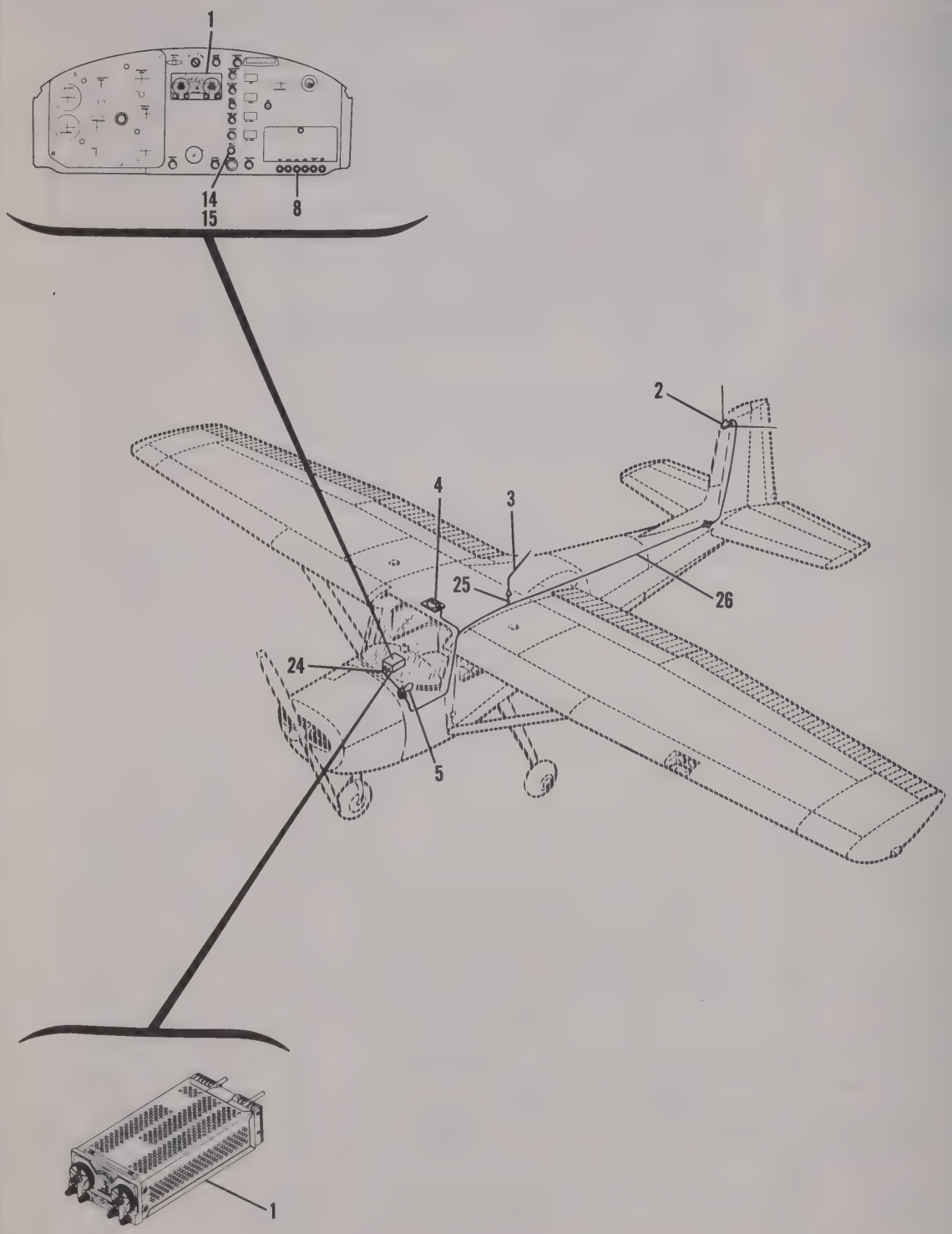


## 150 SERIAL 15059711 & ON

Figure 3-3. King KX-150 Radio Installation (Sheet 1 of 7)

KING KX-150 RADIO INSTALLATION

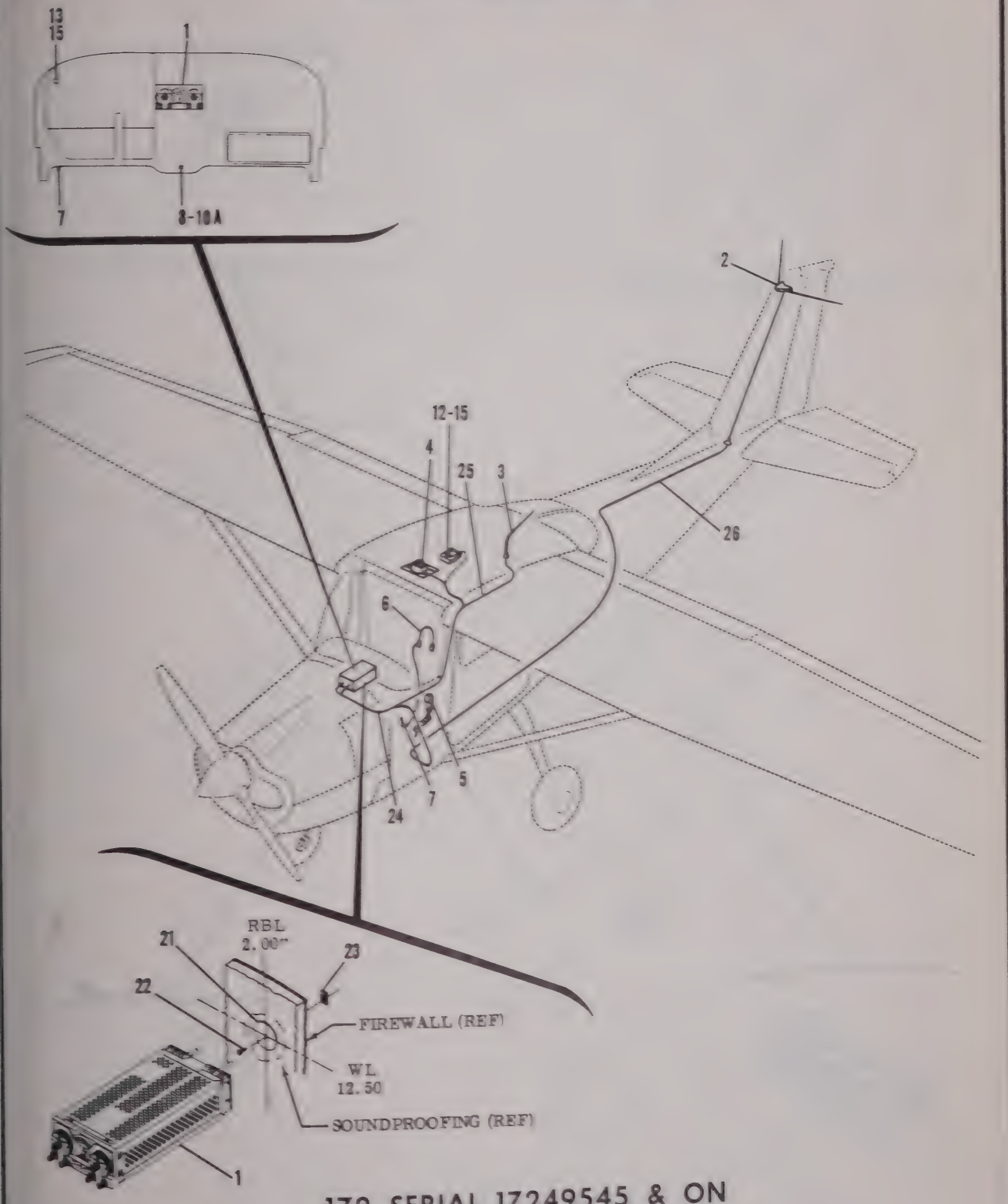


172 SERIAL 17249545 & ON
P172 SERIAL P17257120 & ON

Figure 3-3. King KX-150 Radio Installation (Sheet 2 of 7)

KING KX-150 RADIO INSTALLATION

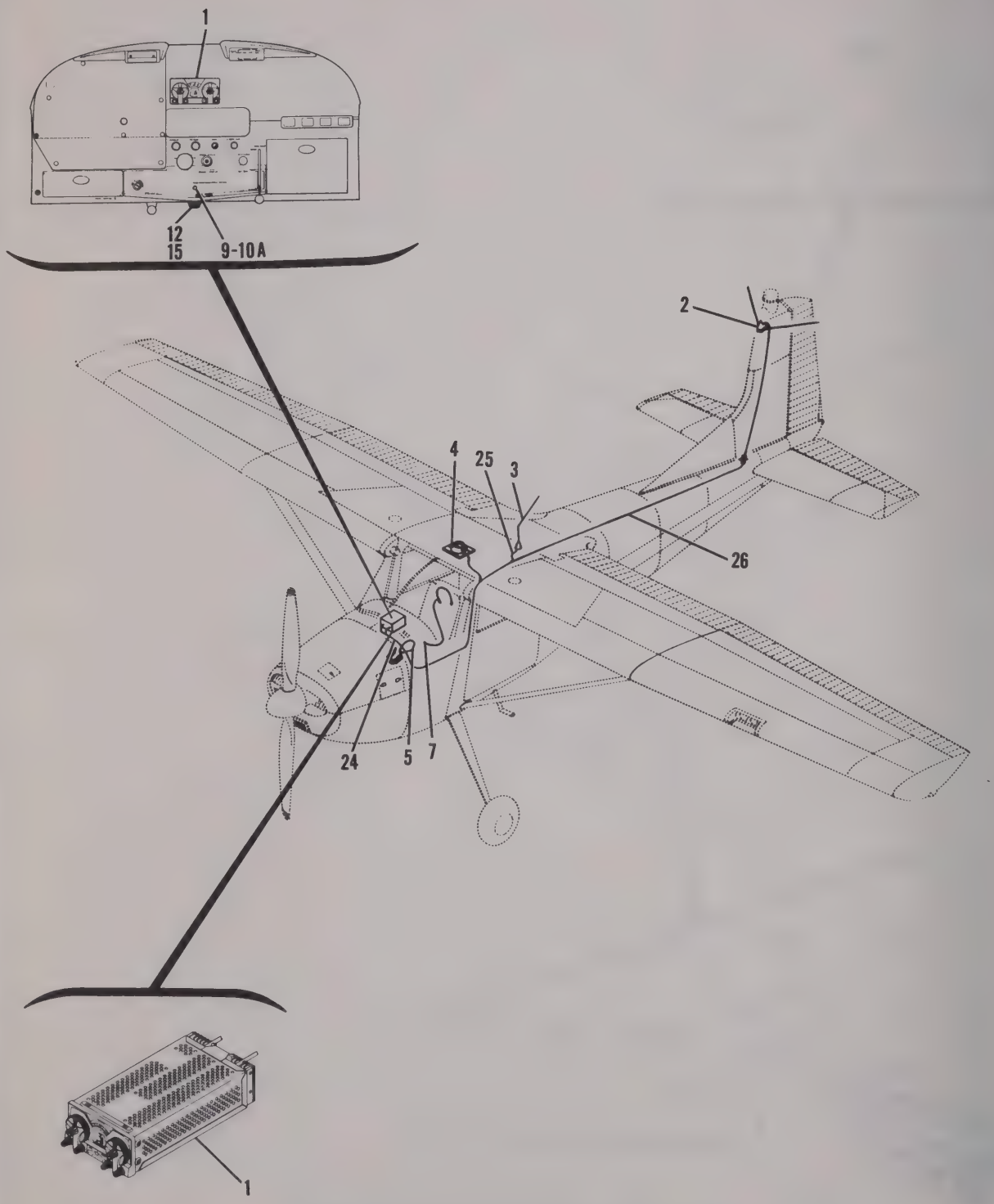


## 180 SERIAL 18051184 & ON
## 185 SERIAL 185-0498 & ON

Figure 3-3. King KX-150 Radio Installation (Sheet 3 of 7)

DUAL KING KX-150 RADIO INSTALLATION

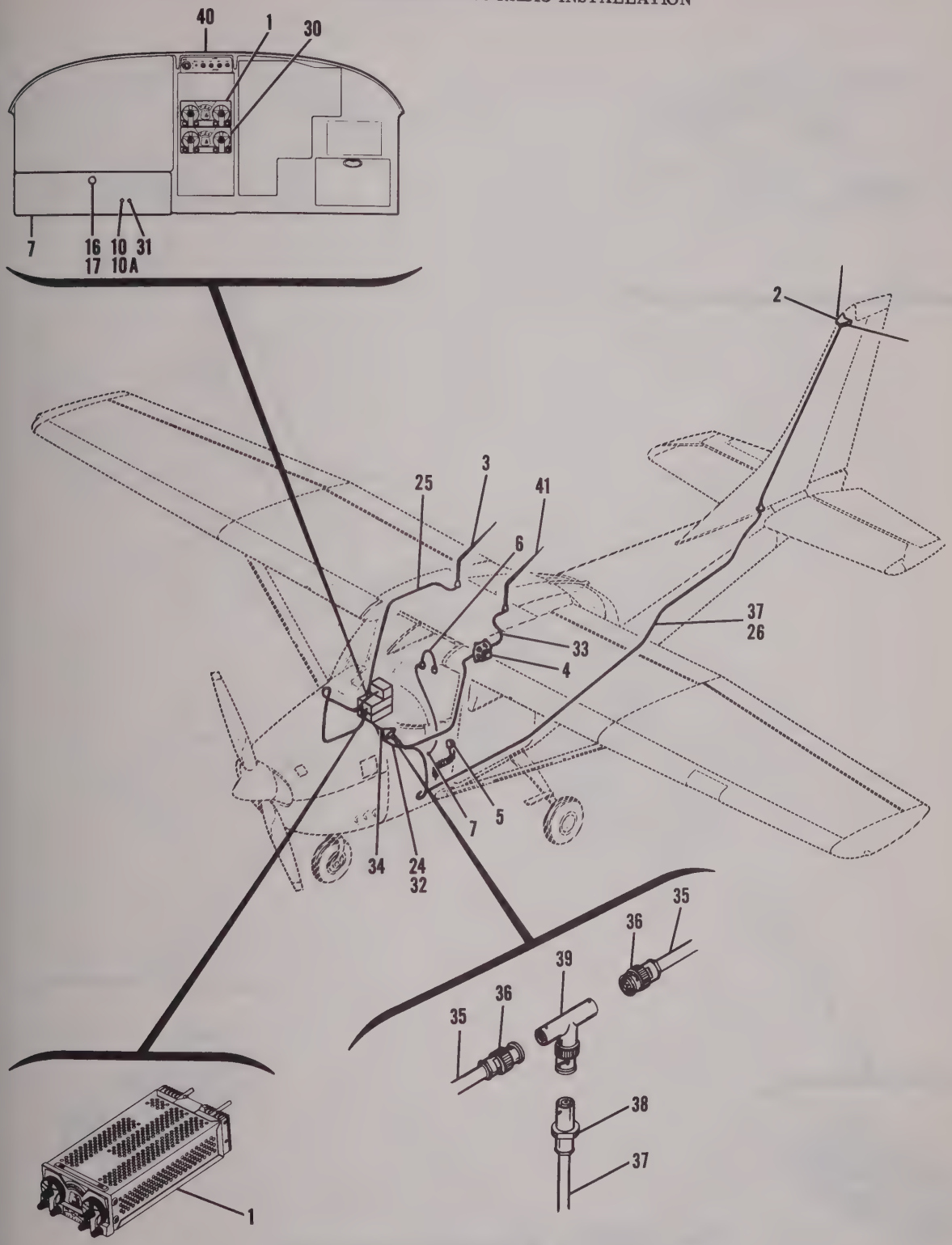


182 SERIAL 18254347 & ON

Figure 3-3. King KX-150 Radio Installation (Sheet 4 of 7)

KING KX-150 RADIO INSTALLATION

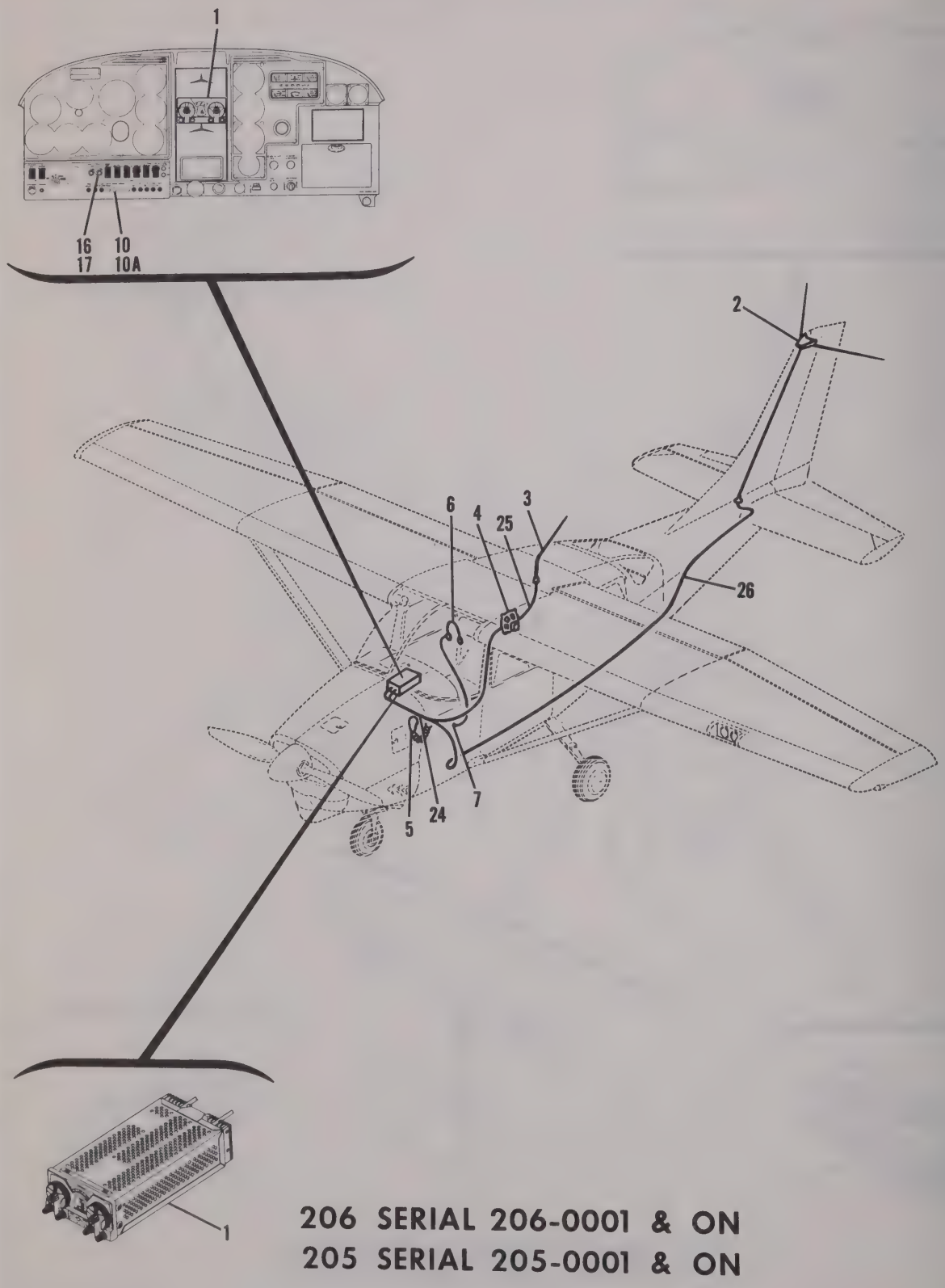


206 SERIAL 206-0001 & ON
205 SERIAL 205-0001 & ON

Figure 3-3. King KX-150 Radio Installation (Sheet 5 of 7)

KING KX-150 RADIO INSTALLATION

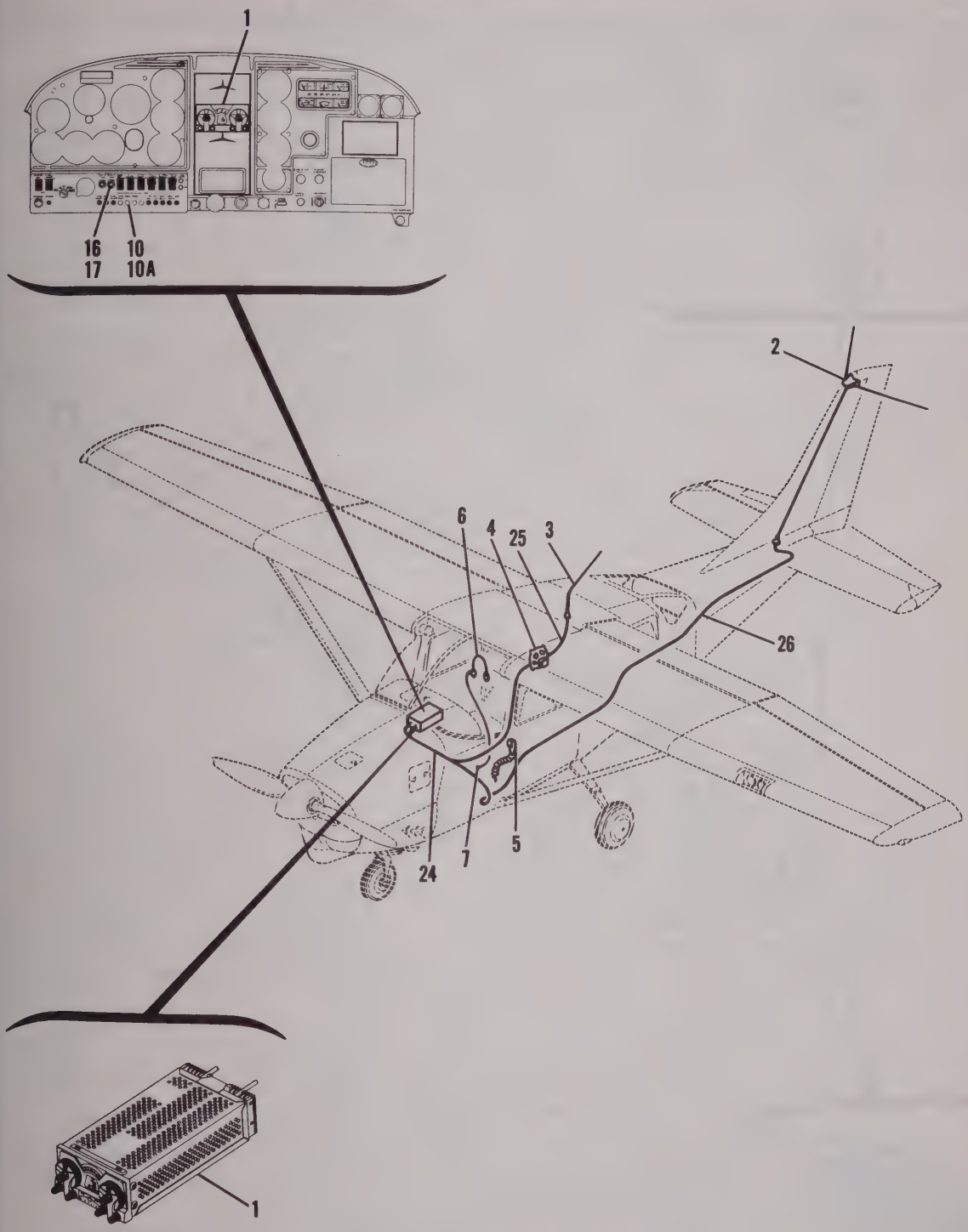


## 210 SERIAL 21058111 & ON

Figure 3-3. King KX-150 Radio Installation (Sheet 6 of 7)

KING KX-150 RADIO INSTALLATION

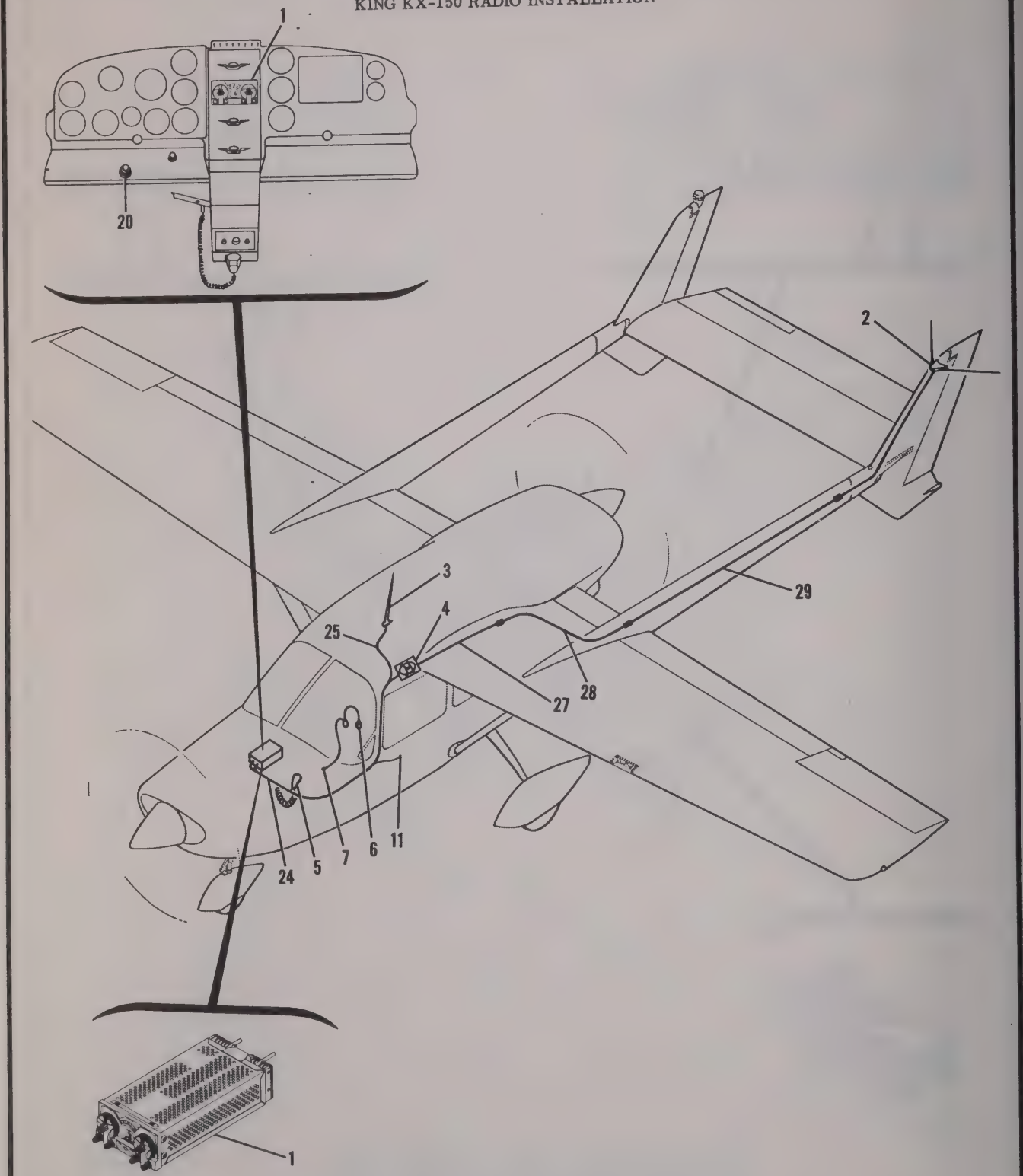


## 336 SERIAL 336-0001 THRU 336-0195

Figure 3-3. King KX-150 Radio Installation (Sheet 7 of 7)

| FIGURE AND INDEX NO. | PART NUMBER | DESCRIPTION<br>1 2 3 4 5 6 7 | UNITS PER ASSY | USABLE ON CODE |
|---|---|---|---|---|
| 3-3- | | RADIO INSTALLATION - KING KX-150 THRU 1964 ONLY, KX-150A THRU 1965 ONLY & KX-150B 1966 & ON | N/P | |
| | KX-150A | * DIRECTOR 14 OR 28 VOLTS FOR DOMESTIC USE ONLY THRU 1965 WHEN EXHAUSTED USE KX-150B | A/R | |
| | KX-150AE | * DIRECTOR 14 OR 28 VOLTS FOR EXPORT USE ONLY THRU 1965 WHEN EXHAUSTED USE KX-150BE | A/R | |
| - 1 | KX-150B | * DIRECTOR 14 OR 28 VOLTS FOR DOMESTIC USE ONLY 1966 & ON | A/R | |
| | KX-150BE | * DIRECTOR 14 OR 28 VOLTS FOR DOMESTIC USE ONLY 1966 & ON | A/R | |
| | S308CCT-L | * PLUG 8 PIN | 1 | |
| | | ATTACHING PARTS | | |
| | S1022Z6-6 | SCREW ALL MODELS EXCEPT 336 | 4 | |
| | NAS446-2-3 | NUT ALL MODELS EXCEPT 336 | 4 | |
| | AN507-632R6 | SCREW 336 ONLY | 4 | |
| | NAS697A06 | NUT 336 ONLY | 4 | |
| | | ---*--- | | |
| | S1021Z8-8 | SCREW-DUST COVER ATTACHMENT 180 & 185 ONLY | 1 | |
| | 0570004-1 | STRAP-DUST COVER ATTACHMENT MODIFY BY BENDING ONE EAR STRAIGHT 150 ONLY | 1 | |
| | | ATTACHING PARTS | | |
| | S1021Z8-8 | SCREW | 2 | |
| | NAS446-4-3 | NUT | 1 | |
| | NAS395-14-3 | NUT | 1 | |
| | | ---*--- | | |
| | 0570004-2 | STRAP-DUST COVER ATTACHMENT REPLACES 0570004-1 STRAP INSTALLED AS STANDARD EQUIPMENT 172 AND P172 THRU 1963 ONLY | 1 | |
| | | ATTACHING PARTS | | |
| | S1021Z8-8 | SCREW | 1 | |
| | NAS395-8-8 | NUT | 1 | |
| | | ---*--- | | |
| - 2 | | OMNI ANTENNA INSTALLATION ----SEE FIGURE 8-2 | 1 | |
| - 3 | | VHF ANTENNA INSTALLATION SEE FIGURE 8-1 | 1 | |
| - 4 | | SPEAKER INSTALLATION SEE FIGURE 9-3 | 1 | |
| - 5 | | MICROPHONE INSTALLATION SEE FIGURE 9-4 | 1 | |
| | | RADIO NOISE FILTER INSTALLATION SEE FIGURE 10-5 | 1 | |
| | | RADIO COOLING INSTALLATION---- SEE FIGURE 10-1 | 1 | |
| - 6 | | HEADSET INSTALLATION SEE FIGURE 9-5 | 1 | |
| - 7 | S1103-1 | PHONE JACK | 1 | |
| - 8 | S1090-4 | FUSE HOLDER ASSY-----150 ONLY-172 AND P172 THRU 1963 | 1 | |
| | S1091-13 | CAP-15A 150 ONLY-172 AND P172 THRU 1963 | 1 | |
| | S1091-15 | FUSE 150 ONLY-172 AND P172 THRU 1963 | 1 | |
| - 9 | PSM-15N | CIRCUIT BREAKER 180 AND 185 THRU 1963 | 1 | |
| - 10 | S1232-15 | CIRCUIT BREAKER 182, 205 AND 210 THRU 1963 | 1 | |
| -10A | S1360-15 | CIRCUIT BREAKER 172, 180, 182, 185, 205, 206 AND 210 1964 AND ON & ALL P206 & U206 MODELS | 1 | |
| - 11 | S1360-5 | CIRCUIT BREAKER 336 & 337 ONLY | 1 | |
| - 12 | 0413126-5 | RHEOSTAT 180 AND 185 ALL MODELS AND 172 1964 AND ON | 1 | |
| - 13 | 0413126-9 | RHEOSTAT 172 AND P172 THRU 1963 | 1 | |
| - 14 | 0413126-6 | RHEOSTAT 150 ONLY | 1 | |
| - 15 | 0413126-3 | KNOB-RHEOSTAT 150, 172, P172, 180 & 185 ONLY | 1 | |
| - 16 | R-12 1/2-75-RS34 | KNOB-RHEOSTAT 182, 205, 206, P206, U206, TP206, TU206, 210 & T210 ONLY | 1 | |
| - 17 | S1163-2 | RHEOSTAT 182, 205, 206, P206, U206, TP206, TU206, 210 & T210 ONLY | 1 | |
| - 18 | | NOT USED | NP | |
| - 19 | | NOT USED | NP | |
| - 20 | | DROPPING RESISTOR-FLT INST & RADIO DIAL LT 336 ONLY | 1 | |
| | | SEE FIGURE 10-2 | | |
| - 21 | 0400123-1 | DISC 172 AND P172 THRU 1963 ONLY | 1 | |
| | | ATTACHING PARTS | | |
| - 22 | S1021Z10-10 | SCREW | 1 | |
| - 23 | NAS446-5-3 | NUT | 1 | |
| | | ---*--- | | |
| - 24 | | CABLE ASSY-DIRECTOR TO AUDIO HOOK-UP | NP | |
| | S308CCT-K | RECEPTACLE 8 PIN CIN---- KX-150 ONLY | 1 | |
| | S312CCT-K | RECEPTACLE 12 PIN CIN KX-150A & KX-150B ONLY | 1 | |

CONTINUED ON NEXT PAGE

| FIGURE AND INDEX NO. | PART NUMBER | DESCRIPTION 1 2 3 4 5 6 7 | UNITS PER ASSY | USABLE ON CODE |
|---|---|---|---|---|
| 3-3- 25 | | CABLE ASSY-DIRECTOR TO VHF ANT---------- | NP | |
| | RG-58A/U | COAXIAL CABLE-BULK ITEM ---------- | AR | |
| | TENA9-10-1 | * JACK-COAXIAL ---------- | 1 | |
| | S1367-1-10 | TERMINAL ---------- | 1 | |
| | S1367-2-8 | TERMINAL ---------- | 1 | |
| - 26 | | CABLE ASSY-DIRECTOR TO OMNI ANTENNA-----ALL MODELS--------- | NP | |
| | | EXCEPT 336 | | |
| | RG-58A/U | COAXIAL CABLE-BULK ITEM ---------- | AR | |
| | 13A | * PLUG-PHONO-RCA TYPE---------- | 1 | |
| | UG-88C/U | PLUG-COAXIAL 180, 182, 185, 205, 206, P206, U206,---- | 1 | |
| | | TP206, TU206, 210 & T210 ONLY | | |
| | UG-291/U | RECEPTACLE-COAXIAL 150, 172 & P172---------- | 1 | |
| - 27 | | CABLE ASSY-DIRECTOR TO OMNI CABLE CONNECTION AT WING ---- | NP | |
| | | ROOT 336 ONLY | | |
| | RG-58A/U | COAXIAL CABLE-BULK ITEM ---------- | AR | |
| | 13A | * PLUG-PHONO RCA TYPE ---------- | 1 | |
| | UG-88C/U | PLUG-COAXIAL ---------- | 1 | |
| - 28 | | CABLE ASSY-WING ROOT TO BOOM CONNECTION-SUPPLIED ON ---- | REF | |
| | | AIRCRAFT AS STANDARD EQUIPMENT 336 ONLY | | |
| | RG-58A/U | COAXIAL CABLE-BULK ITEM ---------- | AR | |
| | UG-88C/U | PLUG-COAXIAL ---------- | 1 | |
| | UG-89/U | RECEPTACLE-COAXIAL ---------- | 1 | |
| - 29 | | CABLE ASSY-BOOM CONNECTION TO BALUN STUB-----336 ONLY ---- | NP | |
| | RG-58A/U | COAXIAL CABLE-BULK ITEM ---------- | 1 | |
| | UG-89/U | RECEPTACLE-COAXIAL ---------- | 1 | |
| | UG-88C/U | PLUG-COAXIAL ---------- | 1 | |
| | | DUAL RADIO INSTALLATION-THE FOLLOWING PARTS ARE REQUIRED IN ADDITION TO THOSE REQUIRED FOR A SINGLE RADIO INSTALLATION. ITEM 37 REPLACES ITEM 26. MODELS 182, 205, 206, P206, U206, TP206, TU206, 210, T210 & 336 ONLY | | |
| | KX-150A | * DIRECTOR 14 OR 28 VOLTS FOR DOMESTIC ---------- | A/R | |
| | | USE ONLY THRU 1965 WHEN EXHAUSTED USE KX-150B | | |
| | KX-150AE | * DIRECTOR 14 OR 28 VOLTS FOR EXPORT ---------- | A/R | |
| | | USE ONLY THRU 1965 WHEN EXHAUSTED USE KX-150BE | | |
| - 30 | KX-150B | * DIRECTOR 14 OR 28 VOLTS FOR DOMESTIC ---------- | A/R | |
| | | USE ONLY 1966 & ON | | |
| | KX-150BE | * DIRECTOR 14 OR 28 VOLTS FOR DOMESTIC ---------- | A/R | |
| | | USE ONLY 1966 & ON | | |
| | S308CCT-4 | * PLUG 8 PIN ---------- | 1 | |
| | | ATTACHING PARTS | | |
| | S1022Z6-6 | SCREW 182, 205, 206, P206, U206, TP206, TU206,---------- | 4 | |
| | | 210 & T210 ONLY | | |
| | NAS446-2-3 | NUT 182, 205, 206, P206, U206, TP206, TU206, ---------- | 4 | |
| | | 210 & T210 ONLY | | |
| | AN507-632R6 | SCREW 336 ONLY ---------- | 4 | |
| | NAS697A06 | NUT 336 ONLY---------- | 4 | |
| | 1270465-2 | STRAP 150 ONLY ---------- | 1 | |
| | | ATTACHING PARTS | | |
| | S1022Z-6-6 | SCREW ---------- | 2 | |
| | NAS446-2-3 | NUT ---------- | 2 | |
| | | ---*--- | | |
| - 31 | S1232-10 | CIRCUIT BREAKER 182, 205, AND 210 THRU 1963 ONLY ---- | 1 | |
| | S1360-15 | CIRCUIT BREAKER 182, 205, 206, P206, U206, TP206, ---- | 1 | |
| | | TU206, 210 & T210 ONLY 1964 AND ON | | |
| | S1360-5 | CIRCUIT BREAKER 336 ONLY ---------- | 1 | |
| - 32 | | CABLE ASSY-DIRECTOR TO AUDIO HOOK-UP ---------- | NP | |
| | S308CCT-K | * RECEPTACLE 8 PIN CIN---- KX-150 ONLY ---------- | 1 | |
| | S312CCT-K | RECEPTACLE 12 PIN CIN KX-150A & KX-150B ONLY ---- | 1 | |
| - 33 | | CABLE ASSY-DIRECTOR TO VHF ANT---------- | NP | |
| | RG-58A/U | COAXIAL CABLE-BULK ITEM ---------- | AR | |
| | TENA9-10-1 | * JACK-COAXIAL ---------- | 1 | |
| | S1367-1-10 | TERMINAL ---------- | 1 | |
| | S1367-2-8 | TERMINAL ---------- | 1 | |

CONTINUED ON NEXT PAGE

| FIGURE AND INDEX NO. | PART NUMBER | DESCRIPTION<br>1 2 3 4 5 6 7 | UNITS PER ASSY | USABLE ON CODE |
|---|---|---|---|---|
| 3-3- 34 | | CABLE ASSY-DIRECTOR TO OMNI TEE ---------- | NP | |
| - 35 | RG-58A/U | COAXIAL CABLE-BULK ITEM ----17.5 INCHES LONG ---------- | AR | |
| | 13A | * PLUG-PHONO RCA TYPE ---------- | 2 | |
| - 36 | UG-260/U | PLUG-COAXIAL ---------- | 2 | |
| - 37 | | CABLE ASSY-OMNI TEE CONNECTOR TO BALUN STUB REPLACES ITEM 26 ALL MODELS EXCEPT 336 | NP | |
| | RG-58A/U | COAXIAL CABLE-BULK ITEM ---------- | AR | |
| | UG-88C/U | PLUG-COAXIAL ---------- | 1 | |
| - 38 | UG-89/U | JACK-COAXIAL ---------- | 1 | |
| | | CABLE ASSY-OMNI TEE TO OMNI CABLE CONNECTION AT WING ROOT 336 ONLY ---- | NP | |
| | RG-58A/U | COAXIAL CABLE-BULK ITEM ---------- | AR | |
| | UG-89/U | JACK-COAXIAL CONNECTS TO TEE ---------- | 1 | |
| | UG-88C/U | PLUG-COAXIAL ---------- | 1 | |
| - 39 | UG-274/U | TEE CONNECTOR ---------- | 1 | |
| - 40 | | TRANSMITTER SELECTOR SWITCH AND AUDIO AMPLIFIER ALL MODELS SEE FIGURE 9-1 ---------- | 1 | |
| - 41 | | VHF ANTENNA INSTALLATION SEE FIGURE 8-1 - ALL MODELS | 1 | |

* ITEMS MARKED WITH ASTERISK SUPPLIED WHEN COMPLETE RADIO IS PURCHASED

KING KR-20 MARKER BEACON RECEIVER INSTALLATION

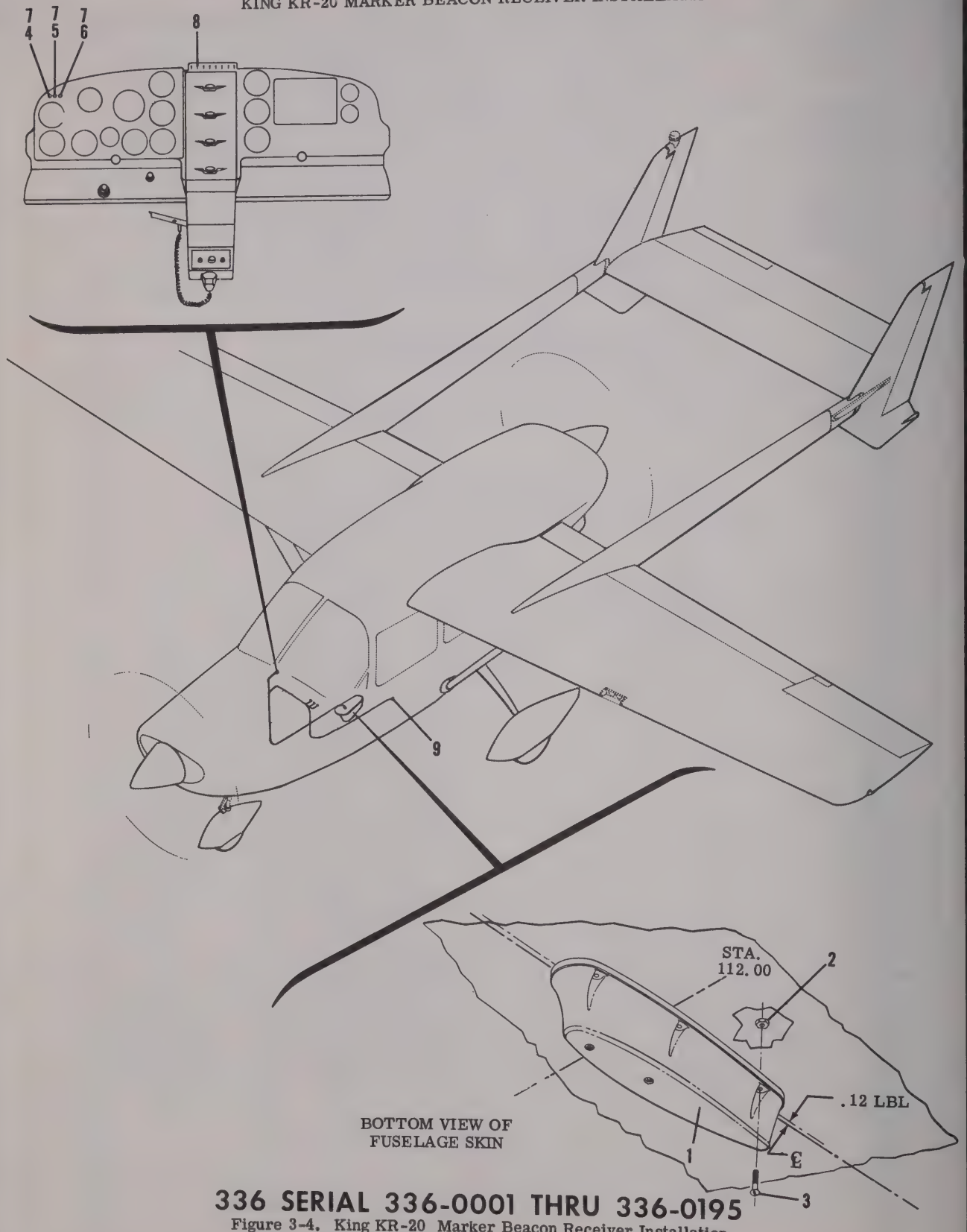


**336 SERIAL 336-0001 THRU 336-0195**

Figure 3-4. King KR-20 Marker Beacon Receiver Installation

| FIGURE AND INDEX NO. | PART NUMBER | DESCRIPTION 1 2 3 4 5 6 7 | UNITS PER ASSY | USABLE ON CODE |
|---|---|---|---|---|
| 3-4- | | MARKER BEACON RECEIVER INSTALLATION-KING KR-20 336 ONLY- | NP | |
| - 1 | KR-20 | * MARKER BEACON RECEIVER | 1 | |
| | 030-2036-00 | PLUG | 1 | |
| | | ATTACHING PARTS | | |
| - 2 | NAS686A08K | NUT | 6 | |
| - 3 | AN500-8-16 | * SCREW | 6 | |
| | | ---*--- | | |
| - 4 | VM-911M-1A | LAMP ASSY MARKED AIRWAYS | 2 | |
| - 5 | VM-911M-10A | LAMP ASSY MARKED OUTER | 1 | |
| - 6 | VM-911M-4A | LAMP ASSY MARKED MIDDLE | 1 | |
| - 7 | 328 | LAMP | 3 | |
| - 8 | 8867K1 | SWITCH | 1 | |
| - 9 | S1360-2 | CIRCUIT BREAKER | 1 | |

* ITEMS MARKED WITH ASTERISK SUPPLIED WHEN COMPLETE RADIO IS PURCHASED

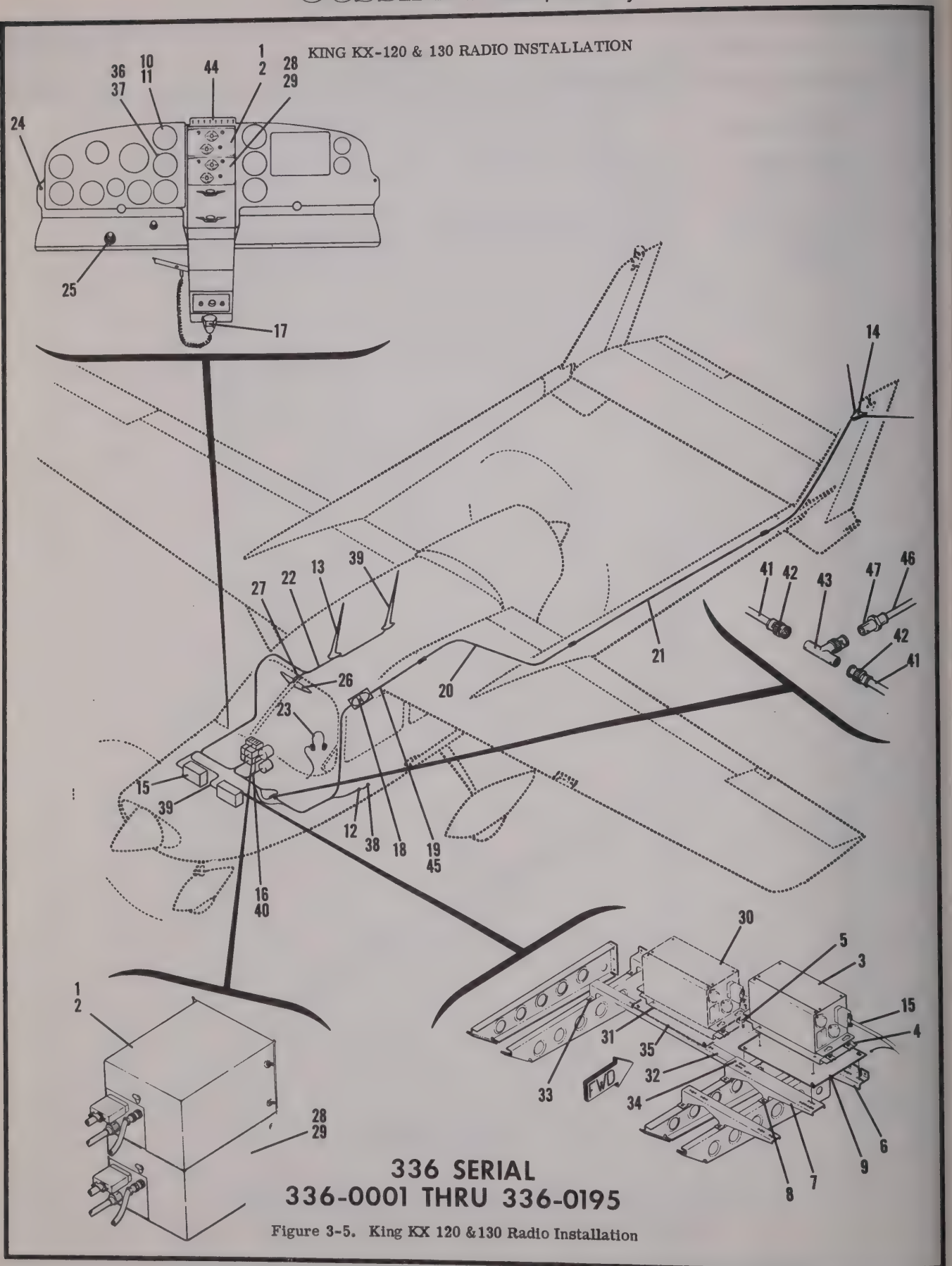


Figure 3-5. King KX 120 &130 Radio Installation

| FIGURE AND INDEX NO. | PART NUMBER | DESCRIPTION 1 2 3 4 5 6 7 | UNITS PER ASSY | USABLE ON CODE |
|---|---|---|---|---|
| 3-5- | | RADIO INSTALLATION-KING KX-120 OR KX-130-336 ONLY---------- | N/P | |
| - 1 | KX-120 | TRANSCEIVER- AS REQUIRED---------- | 1 | |
| - 2 | KX-130 | TRANSCEIVER- AS REQUIRED---------- | 1 | |
| | | ATTACHING PARTS | | |
| | AN507-632R6 | SCREW---------- | 4 | |
| | NAS680A06 | NUTPLATE---------- | 4 | |
| | | ---*--- | | |
| - 3 | KS-502 | POWER SUPPLY- 24 VOLT SYSTEM- STANDARD LOCATI3N---------- | 1 | |
| | | ATTACHING PARTS | | |
| - 4 | 047-1010-00 | MOUNTING PLATE---------- | 1 | |
| - 5 | AN515-8R8 | SCREW---------- | 4 | |
| | | ---*--- | | |
| - 6 | 1470056-1 | SUPPORT ASSY-REPLACES 1413501-18 SUPPORT INSTALLED-------- | 1 | |
| | | AS STD EQUIP WHEN R.H. RADIO RACK IS NOT USED. | | |
| | | ATTACHING PARTS | | |
| | AN520-10R6 | SCREW---------- | 4 | |
| | MS20364-1032C | NUT ---------- | 7 | |
| | AN515-8R8 | SCREW---------- | 1 | |
| | AN520-10R8 | SCREW---------- | 2 | |
| | | ---*--- | | |
| - 7 | 1470056-4 | SUPPORT ASSY---------- | 1 | |
| | | ATTACHING PARTS | | |
| - 8 | AN520-10R8 | SCREW---------- | 4 | |
| | MS20364-1032C | NUT ---------- | 4 | |
| | | ---*--- | | |
| - 9 | 1470111-1 | MOUNTING PLATE---------- | 1 | |
| | | ATTACHING PARTS | | |
| | AN520-10R8 | SCREW---------- | 2 | |
| | | ---*--- | | |
| - 10 | KI-200 | INDICATOR- USED ON KX-120 ONLY- AS REQUIRED---------- | 1 | |
| - 11 | KI-210 | INDICATOR- USED ON KX-130 ONLY- AS REQUIRED---------- | 1 | |
| | | ATTACHING PARTS | | |
| | | SCREW---------- | 3 | |
| | | ---*--- | | |
| - 12 | S1360-5 | CIRCUIT BREAKER---------- | 1 | |
| - 13 | | VHF ANTENNA INSTALLATION SEE FIGURE 8-1---------- | 1 | |
| - 14 | | OMNI ANTENNA INSTALLATION SEE FIGURE 8-2---------- | 1 | |
| - 15 | | CABLE ASSY-TRANSCEIVER TO POWER SUPPLY---------- | N/P | |
| | 030-2002-00 | PLUG-TRANSCEIVER END---------- | 1 | |
| | 030-2000-00 | PLUG-POWER SUPPLY END---------- | 1 | |
| - 16 | | CABLE ASSY-TRANSCEIVER TO INDICATOR---------- | N/P | |
| | 030-2013-00 | PLUG-TRANSCEIVER END- 4 PINS---------- | 1 | |
| | 030-2038-00 | PLUG - ATTACHES TO KI-210 INDICATOR---------- | 1 | |
| | 030-2017-00 | PLUG - ATTACHES TO KI-200 INDICATOR---------- | 1 | |
| - 17 | | MICROPHONE INSTALLATION SEE FIGURE 9-5---------- | 1 | |
| - 18 | | SPEAKER INSTALLATION SEE FIGURE 9-4---------- | 1 | |
| - 19 | | CABLE ASSY-TRANSCEIVER TO OMNI CABLE CONNECTION---------- | N/P | |
| | | AT WING ROOT | | |
| | RG-58A/U | COAXIAL CABLE-BULK ITEM---------- | A/R | |
| | 030-0008-00 | PLUG-CONNECTS TO TRANSCEIVER---------- | 1 | |
| | UG-88C/U | PLUG-COAXIAL---------- | 1 | |
| - 20 | | CABLE ASSY-WING ROOT TO BOOM CONNECTION-SUPPLIED ON------- | N/P | |
| | | AIRCRAFT AS STANDARD EQUIPMENT | | |
| | RG-58A/U | COAXIAL CABLE-BULK ITEM---------- | A/R | |
| | UG-88C/U | PLUG-COAXIAL---------- | 1 | |
| | UG-89/U | RECEPTACLE-COAXIAL---------- | 1 | |
| - 21 | | CABLE ASSY-BOOM CONNECTION TO BALUN STUB---------- | N/P | |
| | RG-58A/U | COAXIAL CABLE-BULK ITEM---------- | A/R | |
| | UG-89/U | RECEPTACLE-COAXIAL---------- | 1 | |
| | UG-88C/U | PLUG-COAXIAL---------- | 1 | |
| - 22 | | CABLE ASSY-TRANSCEIVER TO VHF BROADBAND ANT---------- | N/P | |
| | RG-58A/U | COAXIAL CABLE---------- | 1 | |
| | UG-88C/U | PLUG---------- | 2 | |

CONTINUED ON NEXT PAGE

| FIGURE AND INDEX NO. | PART NUMBER | DESCRIPTION<br>1 2 3 4 5 6 7 | UNITS PER ASSY | USABLE ON CODE |
|---|---|---|---|---|
| 3-5- 23 | 0770039-1 | HEADSET ASSY | 1 | |
| | | RADIO NOISE FILTER INSTALLATION SEE FIGURE 10-5 | 1 | |
| - 24 | S1103-1 | PHONE JACK | 1 | |
| - 25 | | DROPPING RESISTOR-FLT INST & RADIO DIAL LT-OPT SEE FIGURE 10-2 | 1 | |
| - 26 | | VHF GLIDE SLOPE ANTENNA INSTL SEE FIGURE 8-3 | N/P | |
| - 27 | | CABLE ASSY-TRANSCEIVER TO GLIDE SLOPE ANTENNA USED ON KX-130 ONLY | A/R | |
| | RG-58A/U | COAXIAL CABLE-BULK ITEM | 1 | |
| | 030000300 | RECEPTACLE-COAXIAL | 1 | |
| | | RADIO COOLING INSTALLATION SEE FIGURE 10-1 | | |
| | | DUAL KX-120 RADIO INSTALLATION OR KX-120 & KX-130 RADIO COMBINATION-THE FOLLOWING PARTS ARE REQUIRED IN ADDITION TO THOSE REQUIRED FOR A SINGLE RADIO INSTALLATION. ITEM 29 IS REPLACED BY ITEM 45 WHEN DUAL RADIOS ARE INSTALLED. | | |
| - 28 | KX-120 | TRANSCEIVER- AS REQUIRED | 1 | |
| - 29 | KX-130 | TRANSCEIVER- AS REQUIRED | 1 | |
| | | ATTACHING PARTS | | |
| | AN507-632R6 | SCREW | 4 | |
| | NAS680A06 | NUTPLATE | 4 | |
| | | ---*--- | | |
| - 30 | KS-502 | POWER SUPPLY - 24 VOLT SYSTEM | 1 | |
| | | ATTACHING PARTS | | |
| - 31 | 047-1010-00 | MOUNTING PLATE | 1 | |
| | AN515-8R8 | SCREW | 4 | |
| | | ---*--- | | |
| - 32 | 1470056-13 | SUPPORT ASSY | 1 | |
| | | ATTACHING PARTS | | |
| | 1470056-14 | ANGLE | 1 | |
| - 33 | AN520-10R8 | SCREW | 4 | |
| | MS20364-1032C | NUT | 4 | |
| - 34 | AN515-8R8 | SCREW | 1 | |
| | MS20364-832C | NUT | 1 | |
| | | ---*--- | | |
| - 35 | 1470111-1 | MOUNTING PLATE | 1 | |
| | | ATTACHING PARTS | | |
| | AN520-10R8 | SCREW | 4 | |
| | | ---*--- | | |
| - 36 | KI-200 | INDICATOR - AS REQUIRED - USED WITH KX-120 | 1 | |
| - 37 | KI-210 | INDICATOR - AS REQUIRED - USED WITH KX-130 | 1 | |
| | | ATTACHING PARTS | | |
| | AN507B632R12 | SCREW | 3 | |
| | | ---*--- | | |
| - 38 | S1360-5 | CIRCUIT BREAKER | 1 | |
| - 39 | | VHF ANTENNA INSTALLATION SEE FIGURE 8-1 | 1 | |
| | | CABLE ASSY-TRANSCEIVER TO POWER SUPPLY | N/P | |
| | 030-2002-00 | PLUG - TRANSCEIVER END | 1 | |
| | 030-2000-00 | PLUG - POWER SUPPLY END | 1 | |
| - 40 | | CABLE ASSY - TRANSCEIVER TO INDICATOR | N/P | |
| | 030-2013-00 | PLUG - TRANSCEIVER END - 4 PINS | 1 | |
| | 030-2038-00 | PLUG - ATTACHES TO KI-210 INDICATOR | 1 | |
| | 030-2017-00 | PLUG - ATTACHES TO KI-200 INDICATOR | 1 | |
| | | CABLE ASSY - TRANSCEIVER TO OMNI TEE ADAPTER | N/P | |
| - 41 | RG-58A/U | COAXIAL CABLE-BULK ITEM | A/R | |
| - 42 | UG-88C/U | PLUG - COAXIAL | 1 | |
| | 030-0008-00 | PLUG - CONNECTS TO TRANSCEIVER | 1 | |
| - 43 | UG-274/U | TEE ADAPTER | 1 | |

CONTINUED ON NEXT PAGE

| FIGURE AND INDEX NO. | PART NUMBER | 1 2 3 4 5 6 7 DESCRIPTION | UNITS PER ASSY | USABLE ON CODE |
|---|---|---|---|---|
| 3-5- 44 | | AUDIO ISOLATION AMPLIFIER & TRANSMITTER SELECTOR---------- | 1 | |
| | | SWITCH INSTL SEE FIGURE 9-1 | | |
| - 45 | | CABLE ASSY-TEE CONNECTOR TO OMNI CABLE CONNECTION AT------ | N/P | |
| | | WING ROOT-REPLACES ITEM 29 WHEN DUAL RADIOS | | |
| | | ARE INSTALLED | | |
| - 46 | RG-58A/U | COAXIAL CABLE - BULK ITEM - EACH LEAD 17 IN. LONG------- | A/R | |
| - 47 | UG-89/U | JACK - COAXIAL---------- | 1 | |
| | UG-88C/U | PLUG - COAXIAL---------- | 1 | |

KING KX-160 RADIO INSTALLATION

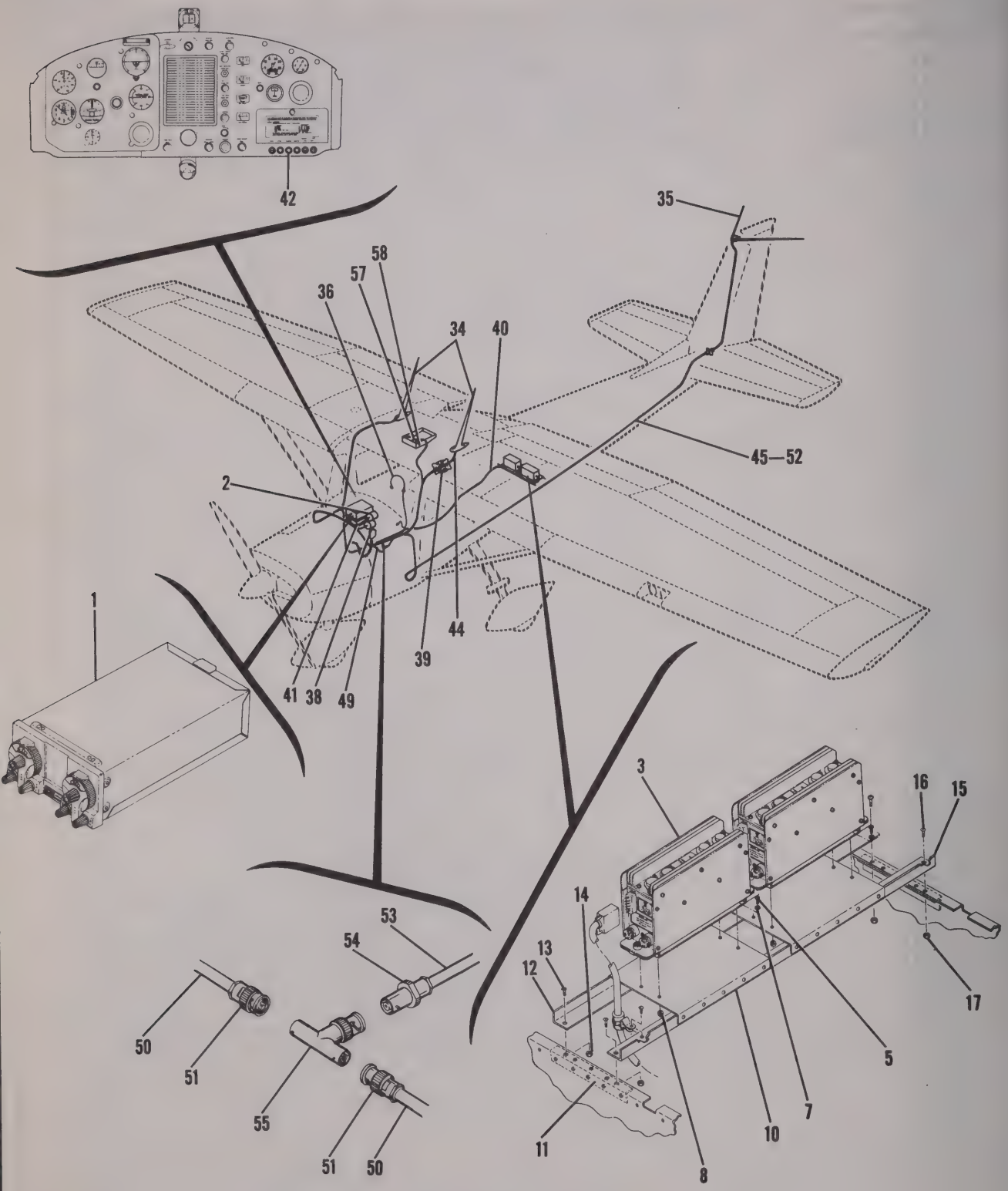


## 150 SERIAL 15061533 & ON

Figure 3-6. King KX-160 Radio Installation - Sheet 1

KING KX-160 RADIO INSTALLATION

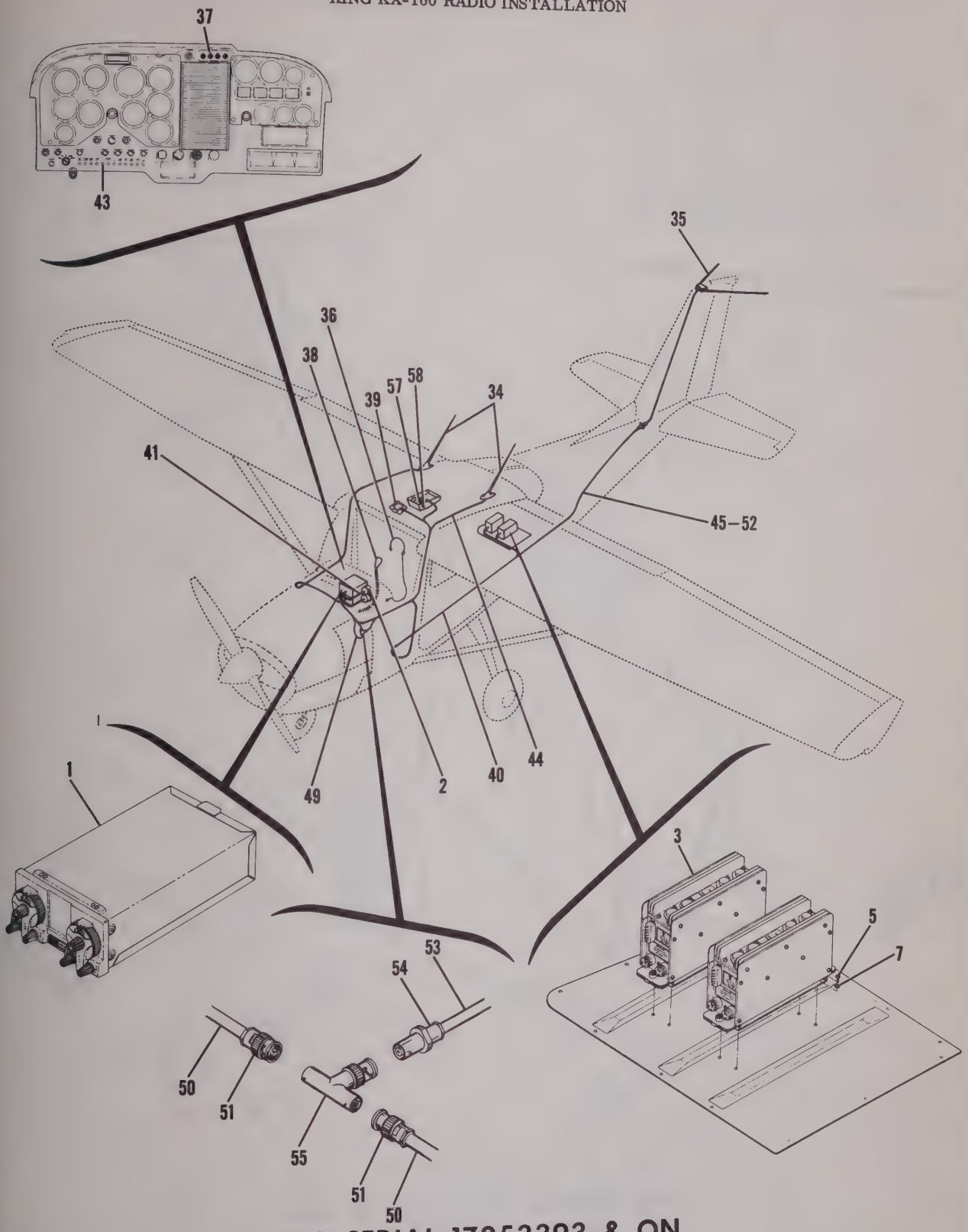


172 SERIAL 17253393 & ON

Figure 3-6. King KX-160 Radio Installation - Sheet 2

KING KX-160 RADIO INSTALLATION

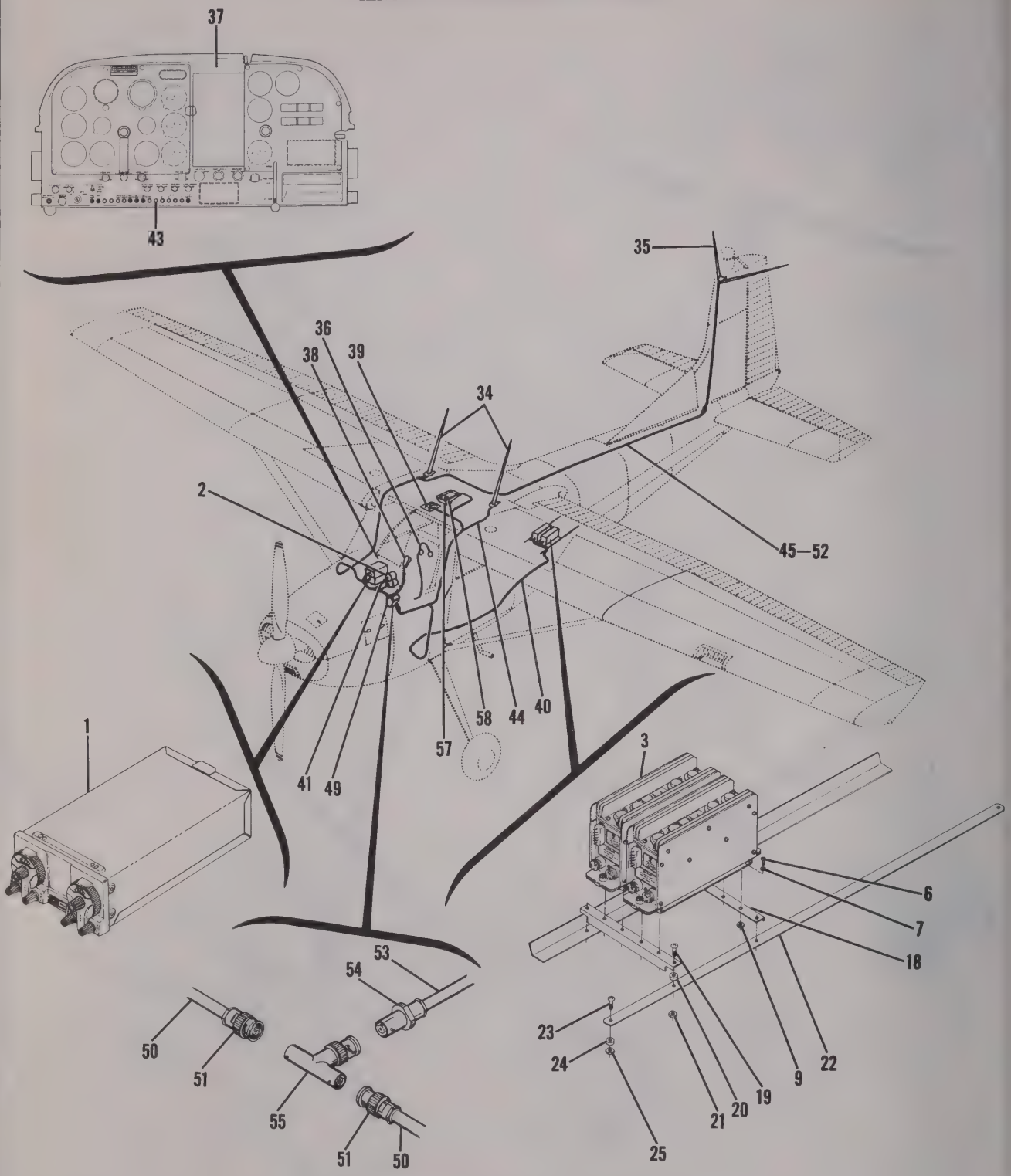


**180 SERIAL 18051608 & ON**
**185 SERIAL 185-0968 & ON**

Figure 3-6. King KX-160 Radio Installation - Sheet 3

KING KX-160 RADIO INSTALLATION

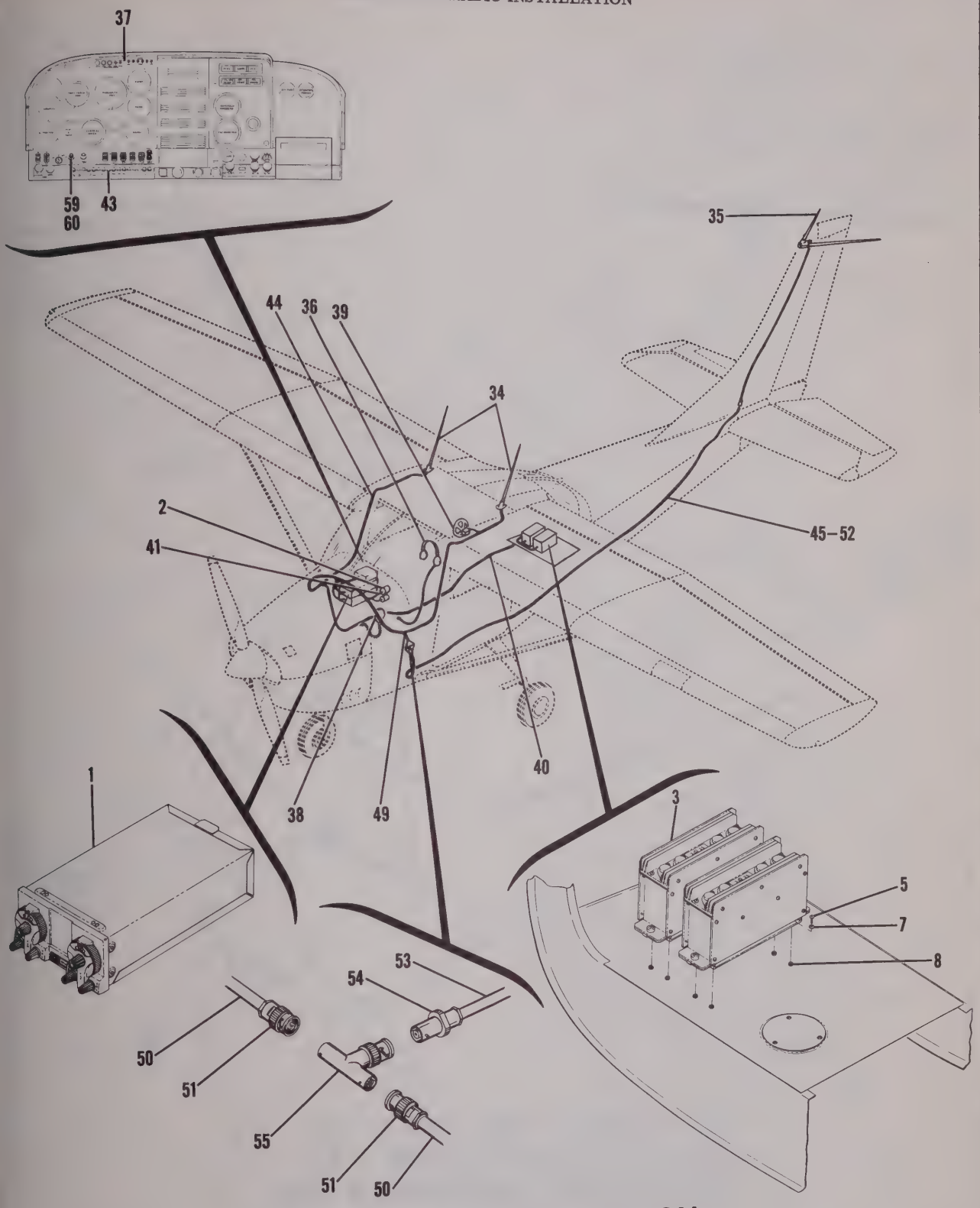


**182 SERIAL 18256685 & ON**

Figure 3-6. King KX-160 Radio Installation - Sheet 4

KING KX-160 RADIO INSTALLATION

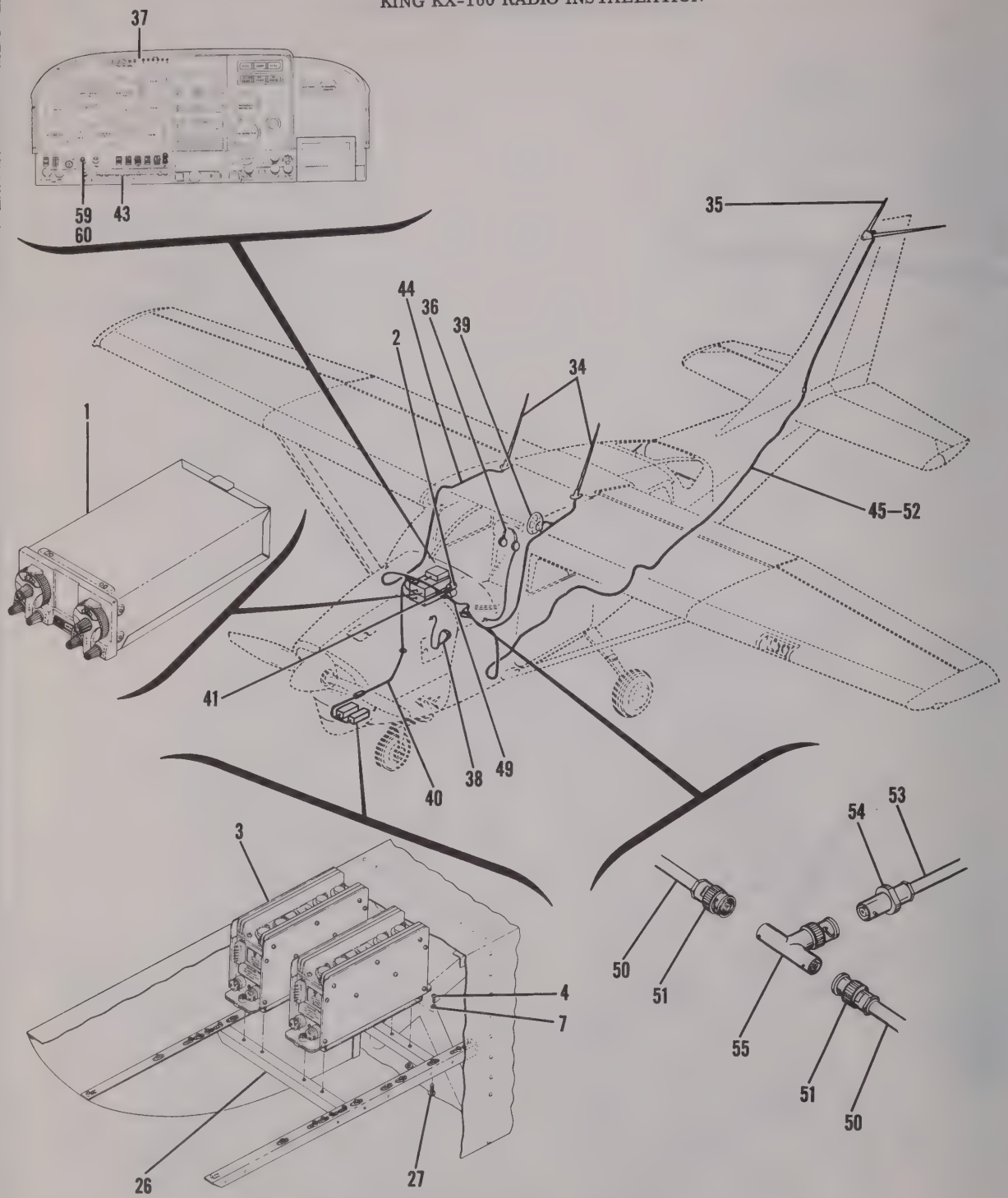


**P206 SERIAL P206-0161 & ON**
**U206 SERIAL U206-0438 & ON**
**TP206 SERIAL TP206-0161 & ON**
**TU206 SERIAL TU206-0438 & ON**

Figure 3-6. King KX-160 Radio Installation - Sheet 5

KING KX-160 RADIO INSTALLATION

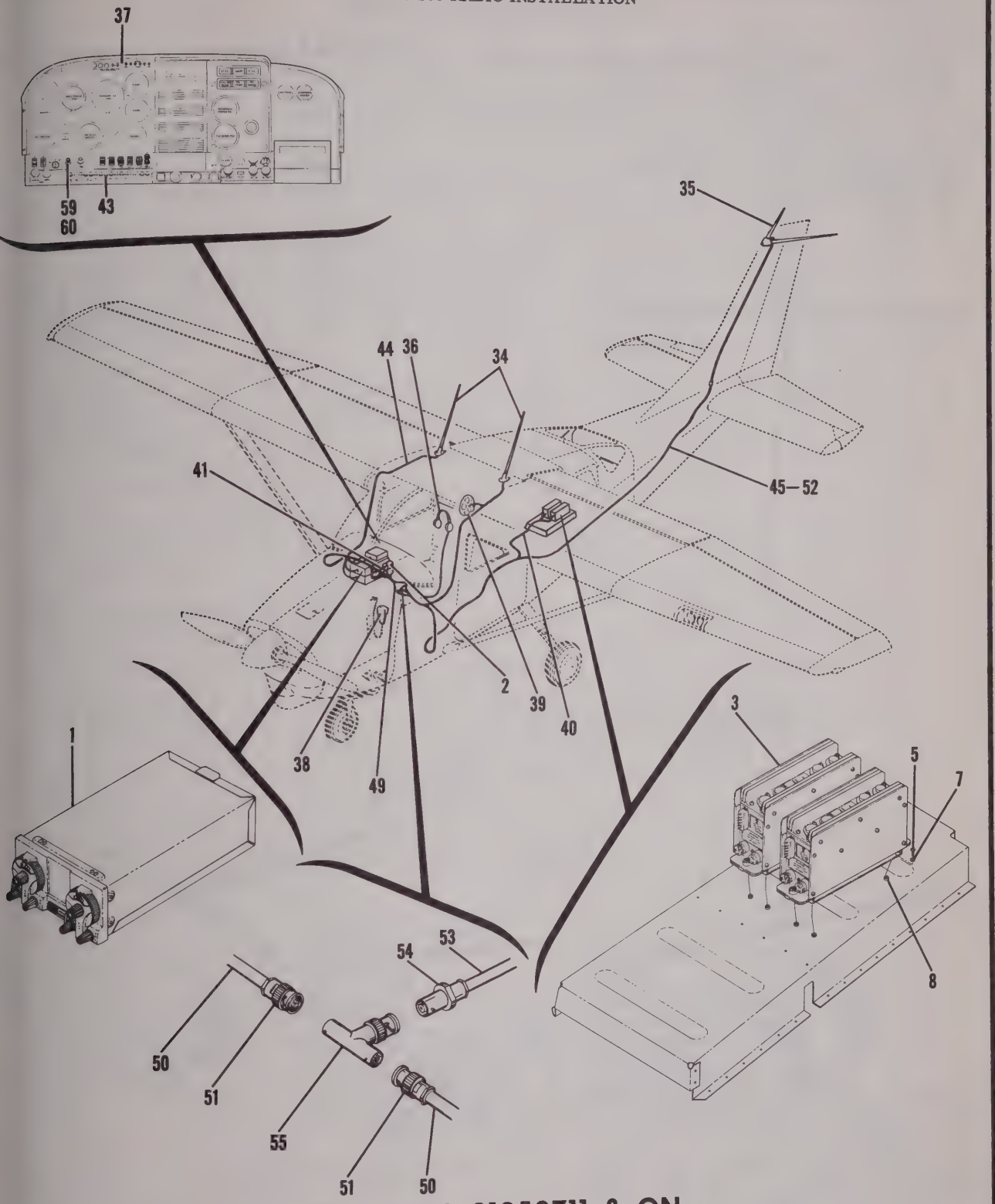


**210 SERIAL 21058711 & ON**
**T210 SERIAL T210-0001 & ON**

Figure 3-6. King KX-160 Radio Installation - Sheet 6

KING KX-160 RADIO INSTALLATION

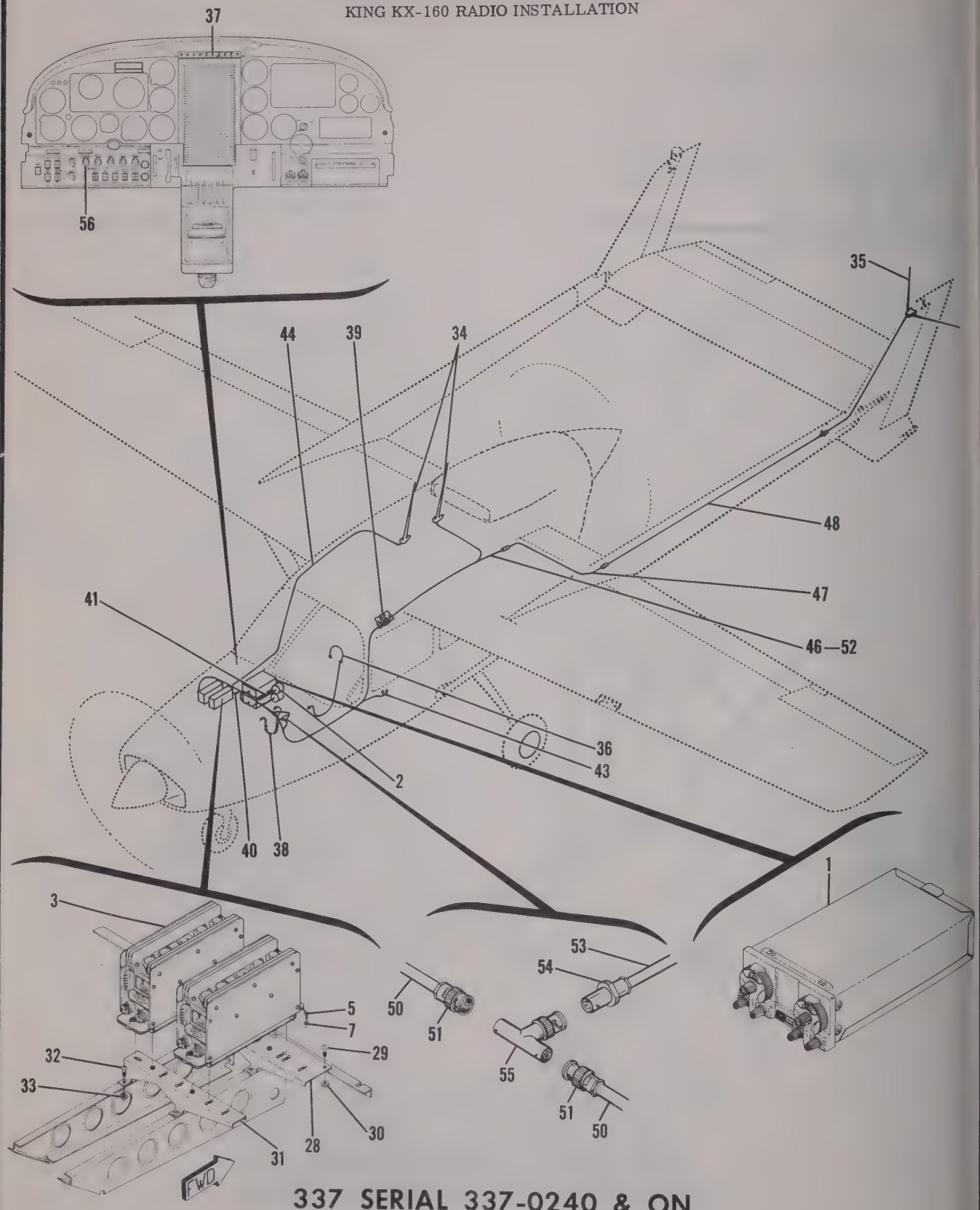


337 SERIAL 337-0240 & ON

Figure 3-6. King KX-160 Radio Installation - Sheet 7

| FIGURE AND INDEX NO. | PART NUMBER | DESCRIPTION<br>1 2 3 4 5 6 7 | UNITS PER ASSY | USABLE ON CODE |
|---|---|---|---|---|
| 3-6- | | KING KX-160E - RADIO INSTALLATION - NAV/COM | | |
| - 1 | KX-160E | TRANSCEIVER-----KG | N/P | |
| | | ATTACHING PARTS | 1 | |
| | S1021Z8-6 | SCREW | 4 | |
| | NAS446-4-3 | NUT | 4 | |
| | | ---*--- | | |
| - 2 | KI-201 | INDICATOR KG | 1 | |
| | | ATTACHING PARTS | | |
| | AN515B6R10 | SCREW | 3 | |
| | | ---*--- | | |
| - 3 | KS-505 | POWER SUPPLY KG | 1 | |
| | | ATTACHING PARTS | | |
| - 4 | AN515-8R8 | SCREW P206, U206, TP206 & TU206 ONLY | 4 | |
| - 5 | AN515-8R16 | SCREW 150, 172, 182, 210, T210 & 337 ONLY | 4 | |
| - 6 | AN515-8R7 | SCREW 180 & 185 ONLY | 4 | |
| - 7 | AN936A8 | WASHER-----ALL MODELS | 4 | |
| - 8 | S1648-08-75 | NUT 150, 172, 182, 210, T210 & 337 ONLY | 4 | |
| - 9 | NAS679A04 | NUT 180, 185, P206, U206, TP206 & TU206 ONLY | 4 | |
| | | ---*--- | | |
| - 10 | 0412012-1 | BRACKET 150 ONLY | 1 | |
| - 11 | 0412011-1 | STIFFENER 150 ONLY | 2 | |
| - 12 | 0411547-2 | SUPPORT 150 ONLY | 1 | |
| | | ATTACHING PARTS | | |
| - 13 | AN515-8R8 | SCREW | 2 | |
| - 14 | NAS679A08 | NUT | 2 | |
| | | ---*--- | | |
| - 15 | 0411547-1 | SUPPORT 150 ONLY | 1 | |
| | | ATTACHING PARTS | | |
| - 16 | AN515-8R8 | SCREW | 2 | |
| - 17 | NAS679A08 | NUT | 2 | |
| | | ---*--- | | |
| - 18 | 0770713-1 | ANGLE 180 & 185 ONLY | 2 | |
| | | ATTACHING PARTS | | |
| - 19 | AN515-8R10 | SCREW | 4 | |
| - 20 | S355 | SPACER | 4 | |
| - 21 | NAS679A08 | NUT | 4 | |
| | | ---*--- | | |
| - 22 | 0770049-1 | ANGLE 180 & 185 ONLY | 1 | |
| | | ATTACHING PARTS | | |
| - 23 | S355 | SCREW | 2 | |
| - 24 | AN515-8R10 | SPACER | 2 | |
| - 25 | MS20365-832C | NUT | 2 | |
| | | ---*--- | | |
| - 26 | 1270627-90 | ATTACH ANGLE P206, TP206, U206 & TU206 ONLY | 2 | |
| | | ATTACHING PARTS | | |
| - 27 | AN520-10R6 | SCREW | 4 | |
| | | ---*--- | | |
| - 28 | 1513629-1 | SUPPORT ASSY 337 ONLY | 1 | |
| | | ATTACHING PARTS | | |
| - 29 | AN515-8R8 | SCREW | 5 | |
| - 30 | NAS679A08 | NUT | 5 | |
| | | ---*--- | | |
| - 31 | 1513635-1 | SUPPORT ASSY 337 ONLY | 1 | |
| | | ATTACHING PARTS | | |
| - 32 | AN515-8R8 | SCREW | 4 | |
| - 33 | NAS679A08 | NUT | 4 | |
| | | ---*--- | | |
| - 34 | | VHF ANTENNA INSTALLATION SEE FIGURE 8-1 | 1 | |
| - 35 | | OMNI ANTENNA INSTALLATION ---SEE FIGURE 8-2 | 1 | |
| - 36 | | HEADSET INSTALLATION SEE FIGURE 9-5 | 1 | |
| - 37 | | TRANSMITTER SELECTOR SWITCH & AUDIO AMPLIFIER INSTL | 1 | |
| | | SEE FIGURE 9-1 | | |
| - 38 | | MICROPHONE INSTALLATION SEE FIGURE 9-4 | 1 | |
| - 39 | | SPEAKER INSTALLATION SEE FIGURE 9-3 | 1 | |
| | | RADIO COOLING INSTALLATION---- SEE FIGURE 10-1 | 1 | |

CONTINUED ON NEXT PAGE

| FIGURE AND INDEX NO. | PART NUMBER | DESCRIPTION<br>1 2 3 4 5 6 7 | UNITS PER ASSY | USABLE ON CODE |
|---|---|---|---|---|
| 3-6- | | RADIO NOISE FILTER INSTALLATION SEE FIGURE 10-5 ---- 337 ONLY | 1 | |
| - 40 | | CABLE ASSY TRANSCEIVER TO POWER SUPPLY ---------- | N/P | |
| | 030-2002-00 | * RECEPTACLE - 20 PINS TRANSCEIVER END KG --------- | 1 | |
| | 030-2000-00 | * RECEPTACLE - 14 PINS POWER SUPPLY END KG--------- | 1 | |
| - 41 | | CABLE ASSY TRANSCEIVER TO INDICATOR ---------- | N/P | |
| | 030-2044-00 | * RECEPTACLE - 8 PINS-----TRANSCEIVER END KG --------- | 1 | |
| | 030-2000-00 | * RECEPTACLE - 14 PINS INDICATOR END-----KG --------- | 1 | |
| - 42 | S1090-4 | FUSE-HOLDER ASSY-----150 ONLY - STANDARD EQUIPMENT ON AFCT | 1 | |
| | S1090-9 | BODY ASSY - FUSE-HOLDER ---------- | 1 | |
| | S1090-13 | CAP - FUSE-HOLDER 15 AMP MARKING ---------- | 1 | |
| | S1091-15 | FUSE - 15 AMP 150 ONLY---------- | 1 | |
| - 43 | S1360-15 | CIRCUIT BREAKER ALL MODELS EXCEPT 150 ---------- | 1 | |
| - 44 | | CABLE ASSY TRANSCEIVER TO VHF ANTENNA ---------- | N/P | |
| | RG-58A/U | COAXIAL CABLE BULK ITEM ---------- | A/R | |
| | 030-0005-00 | * CONNECTOR-----TRANSCEIVER END KG ---------- | 1 | |
| - 45 | | CABLE ASSY TRANSCEIVER TO OMNI ANT BALUN STUB ALL MODELS EXCEPT 337 | N/P | |
| | RG-58A/U | COAXIAL CABLE BULK ITEM ---------- | A/R | |
| | 030-0028-00 | * CONNECTOR-----TRANSCEIVER END---------- | 1 | |
| | UG-88C/U | PLUG - COAXIAL-----ALL MODELS EXCEPT 150 & 172 --------- | 1 | |
| | UG-291/U | PLUG - COAXIAL-----150 & 172 ONLY---------- | 1 | |
| - 46 | | CABLE ASSY TRANSCEIVER TO OMNI CABLE CONNECTION AT ---- WING ROOT 337 ONLY | N/P | |
| | RG-58A/U | COAXIAL CABLE BULK ITEM ---------- | A/R | |
| | 030-0028-00 | * CONNECTOR-----TRANSCEIVER END ---------- | 1 | |
| | UG-88C/U | PLUG - COAXIAL-----WING ROOT END ---------- | 1 | |
| - 47 | | CABLE ASSY WING ROOT CONNECTION TO BOOM CONNECTION ---- SUPPLIED ON AIRCRAFT AS STANDARD EQUIPMENT 337 ONLY | N/P | |
| | RG-58A/U | COAXIAL CABLE BULK ITEM ---------- | A/R | |
| | UG-88C/U | PLUG - COAXIAL-----BOOM END ---------- | 1 | |
| | UG-89/U | RECEPTACLE - COAXIAL WING ROOT END---------- | 1 | |
| - 48 | | CABLE ASSY - BOOM CONNECTION TO BALUN STUB 337 ONLY---- | N/P | |
| | RG-58A/U | COAXIAL CABLE BULK ITEM ---------- | A/R | |
| | UG-89/U | RECEPTACLE - COAXIAL ---------- | 1 | |
| | UG-88C/U | PLUG - COAXIAL-----BALUN STUB END---------- | 1 | |
| | | THE FOLLOWING ADDITIONAL PARTS ARE REQUIRED WHEN DUAL RADIOS ARE INSTALLED. ITEM 45 REPLACES ITEM 46. | | |
| - 49 | | CABLE ASSY - TRANSCEIVER TO OMNI TEE CONNECTOR REPLACES ITEMS 45 AND 46 WHEN DUAL RADIOS ARE INSTALLED | N/P | |
| - 50 | RG-58A/U | COAXIAL CABLE BULK ITEM 17 INCH LEADS --------- | 2 | |
| | 030-0028-00 | * CONNECTOR-----TRANSCEIVER END KG ---------- | 2 | |
| - 51 | UG-88C/U | PLUG - COAXIAL-----OMNI TEE END ---------- | 2 | |
| - 52 | | CABLE ASSY - OMNI TEE TO BALUN STUB ON ALL MODELS EXCEPT 337 AND OMNI TEE TO WING ROOT CONNECTOR ON MODEL 337 REPLACES ITEM 45 OR 46 WHEN DUAL RADIOS ARE INSTALLED. | N/P | |
| - 53 | RG-58A/U | COAXIAL CABLE BULK ITEM ---------- | A/R | |
| - 54 | UG-89/U | JACK - COAXIAL-----OMNI TEE END ---------- | 1 | |
| | UG-88C/U | PLUG - COAXIAL-----ALL MODELS EXCEPT 150 & 172 --------- | 1 | |
| | UG-291/U | PLUG - COAXIAL-----150 & 172 ONLY---------- | 1 | |
| - 55 | UG-274/U | TEE CONNECTOR ---------- | 1 | |
| - 56 | | DROPPING RESISTOR - FLT INST & RADIO DIAL LT SEE FIGURE 10-2 337 ONLY | A/R | |
| - 57 | 0413126-5 | REHOSTAT 150, 172, 180 & 185 ONLY ---------- | 1 | |
| - 58 | S1390-3 | KNOB 150, 172, 180 & 185 ONLY ---------- | 1 | |
| - 59 | R-12 1/2-75-RS34 | REHOSTAT 182, P206, TP206, U206, TU206, 210 & T210 ONLY | 1 | |
| - 60 | S1163-2 | KNOB ASSY 182, P206, TP206, U206, TU206, ---------- 210 & T210 ONLY | 1 | |
| | | * ITEMS MARKED WITH ASTERISK - SUPPLIED WHEN COMPLETE RADIO IS PURCHASED | | |

KING KN-60 DME RADIO INSTALLATION

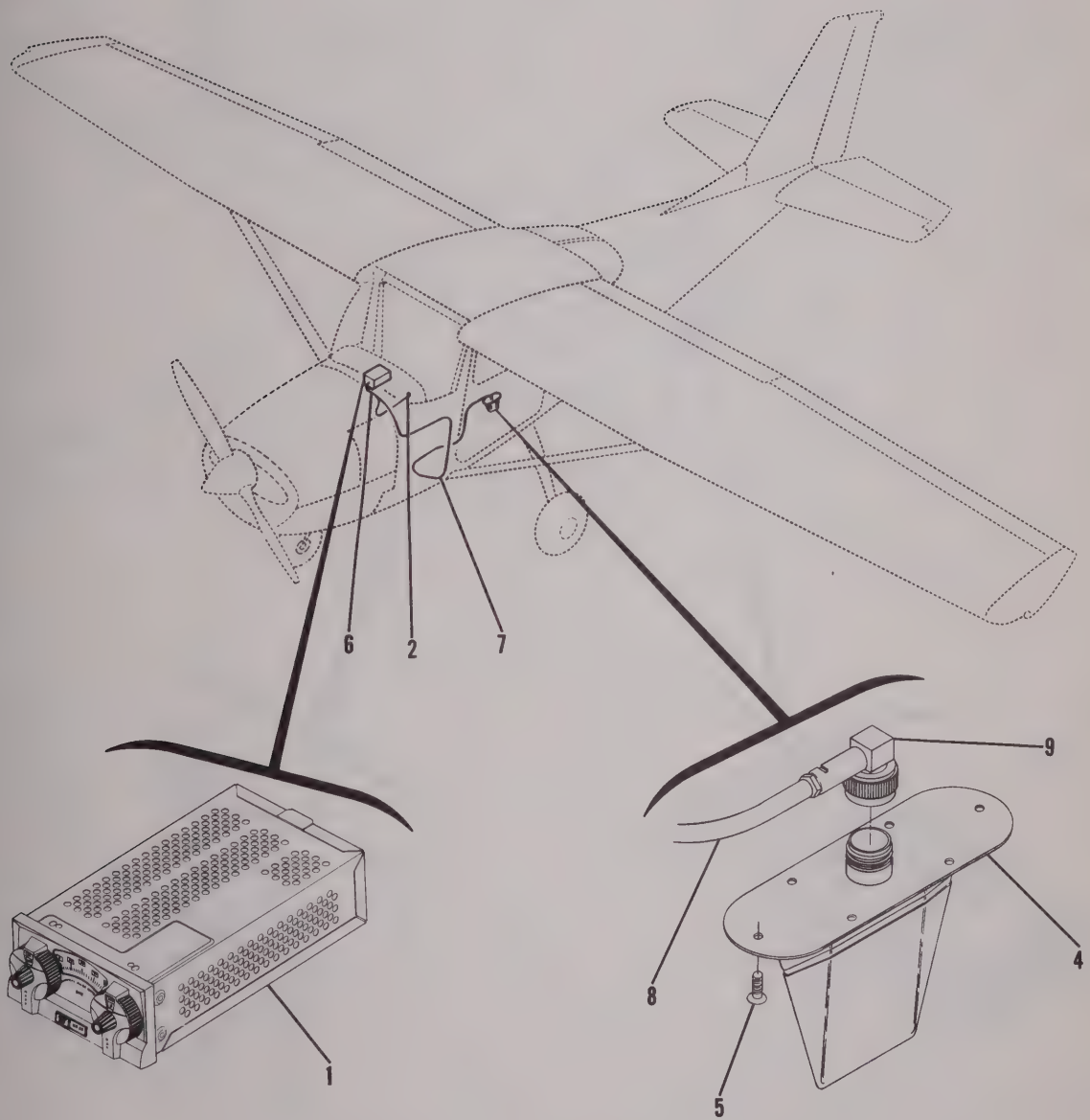


## 172 SERIAL 17253393 & ON

Figure 3-7. King KN-60 DME Radio Installation - Sheet 1

KING KN-60 DME RADIO INSTALLATION

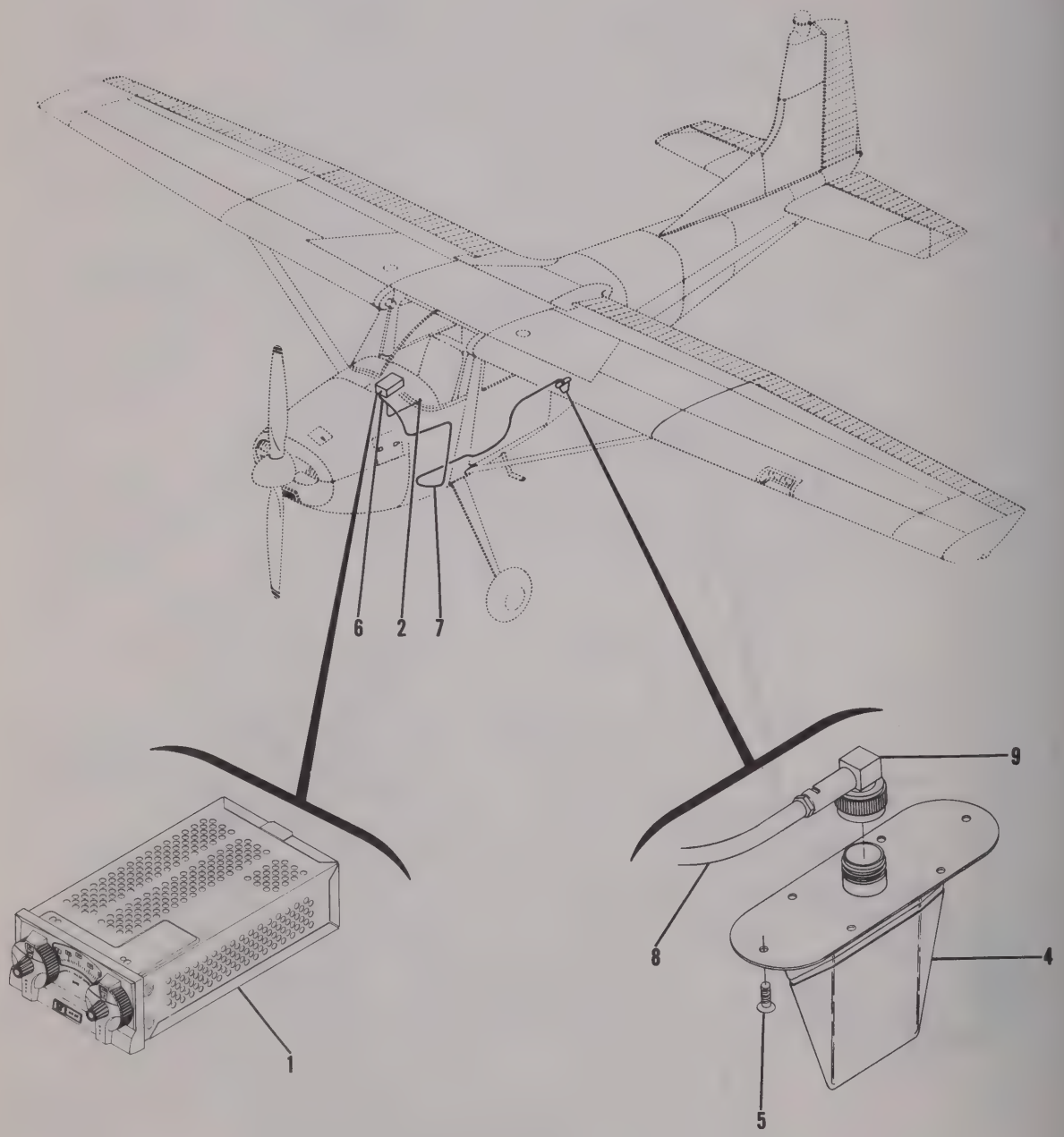


**180 SERIAL 18051608 & ON**
**185 SERIAL 185-0968 & ON**

Figure 3-7. King KN-60 DME Radio Installation - Sheet 2

KING KN-60 DME RADIO INSTALLATION

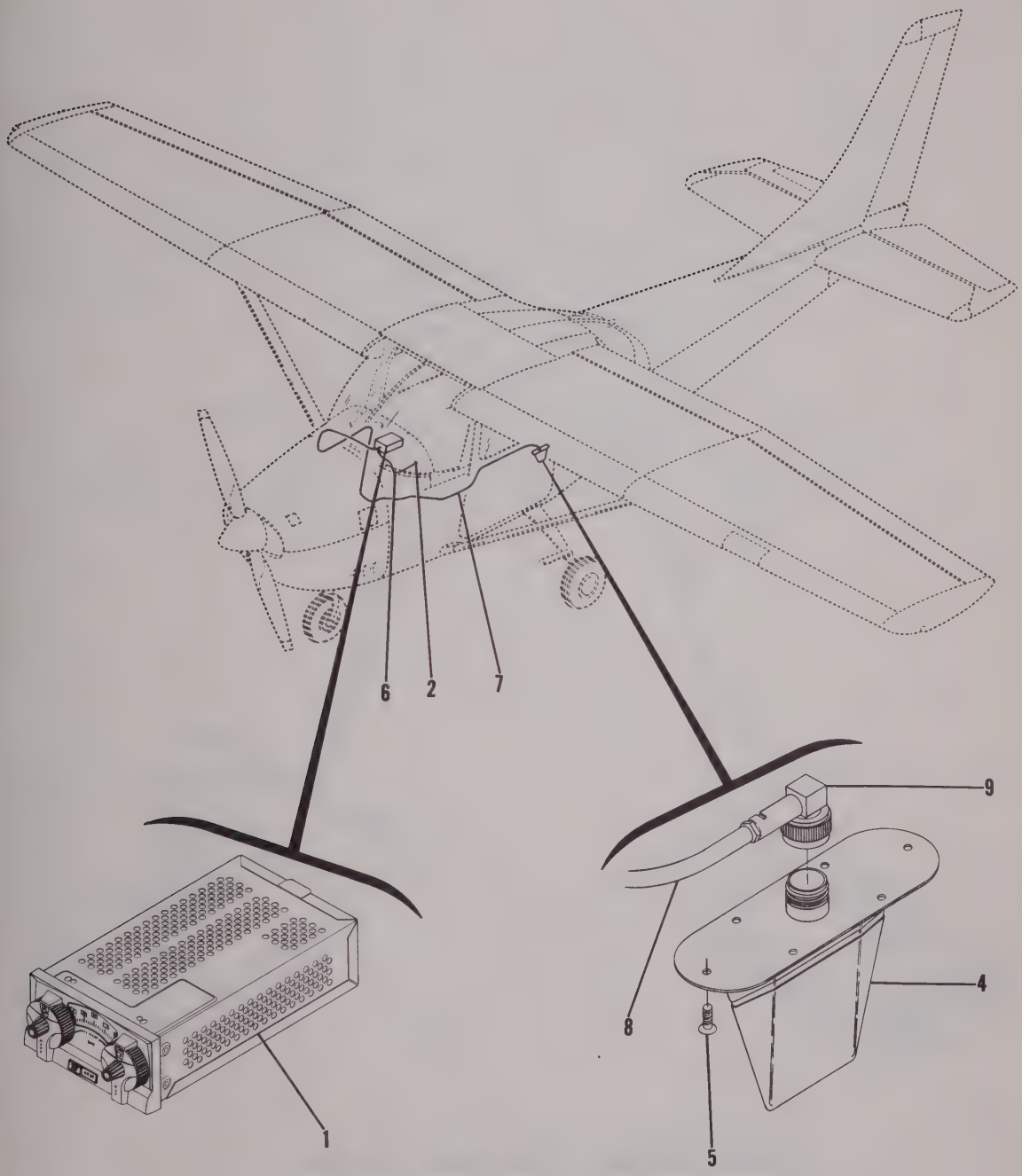


## 182 SERIAL 18256685 & ON

Figure 3-7. King KN-60 DME Radio Installation - Sheet 3

KING KN-60 DME RADIO INSTALLATION

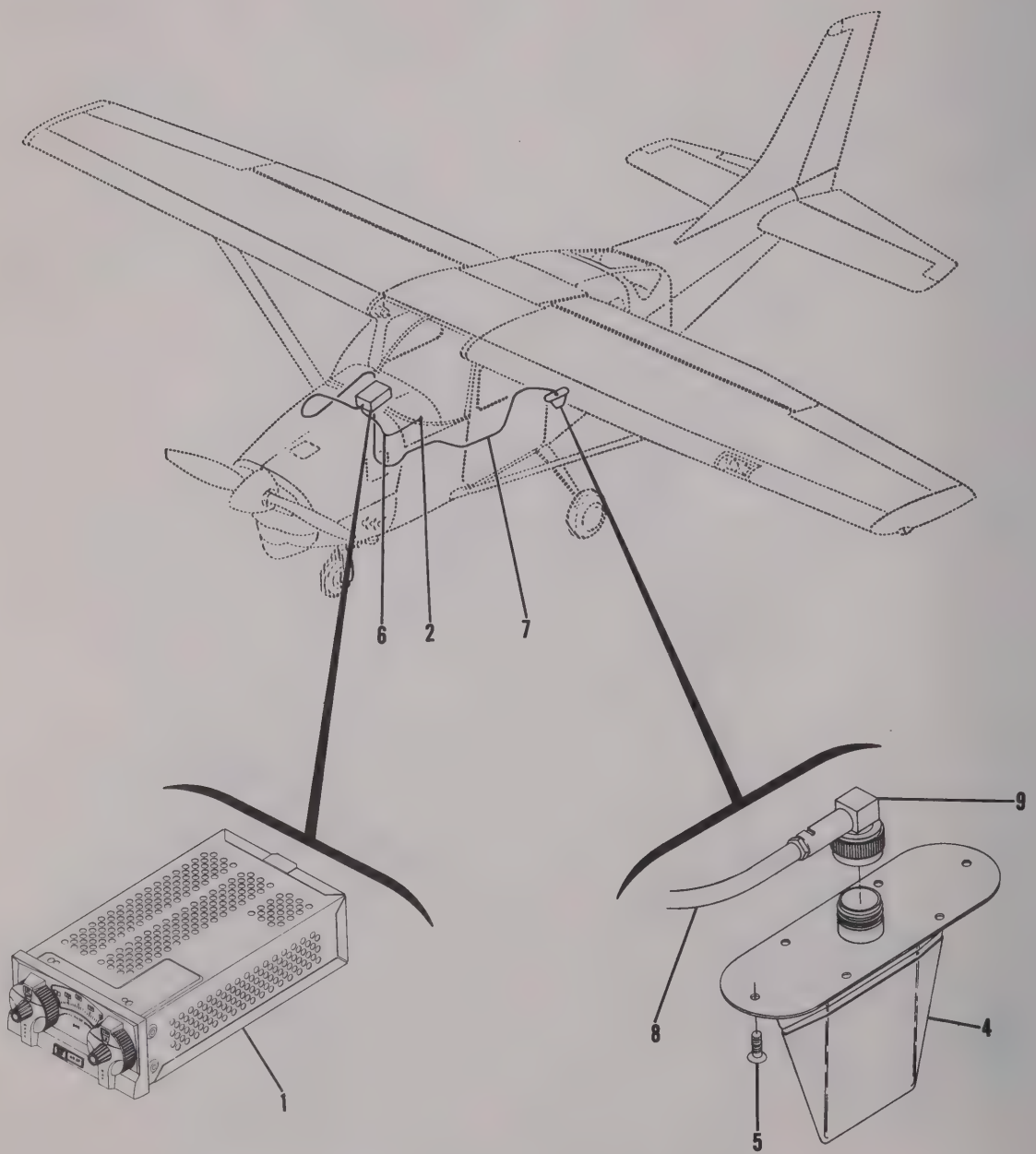


**P206 SERIAL P206-0161 & ON**
**U206 SERIAL U206-0438 & ON**
**TP206 SERIAL TP206-0161 & ON**
**TU206 SERIAL TU206-0438 & ON**

Figure 3-7. King KN-60 DME Radio Installation - Sheet 4

KING KN-60 DME RADIO INSTALLATION

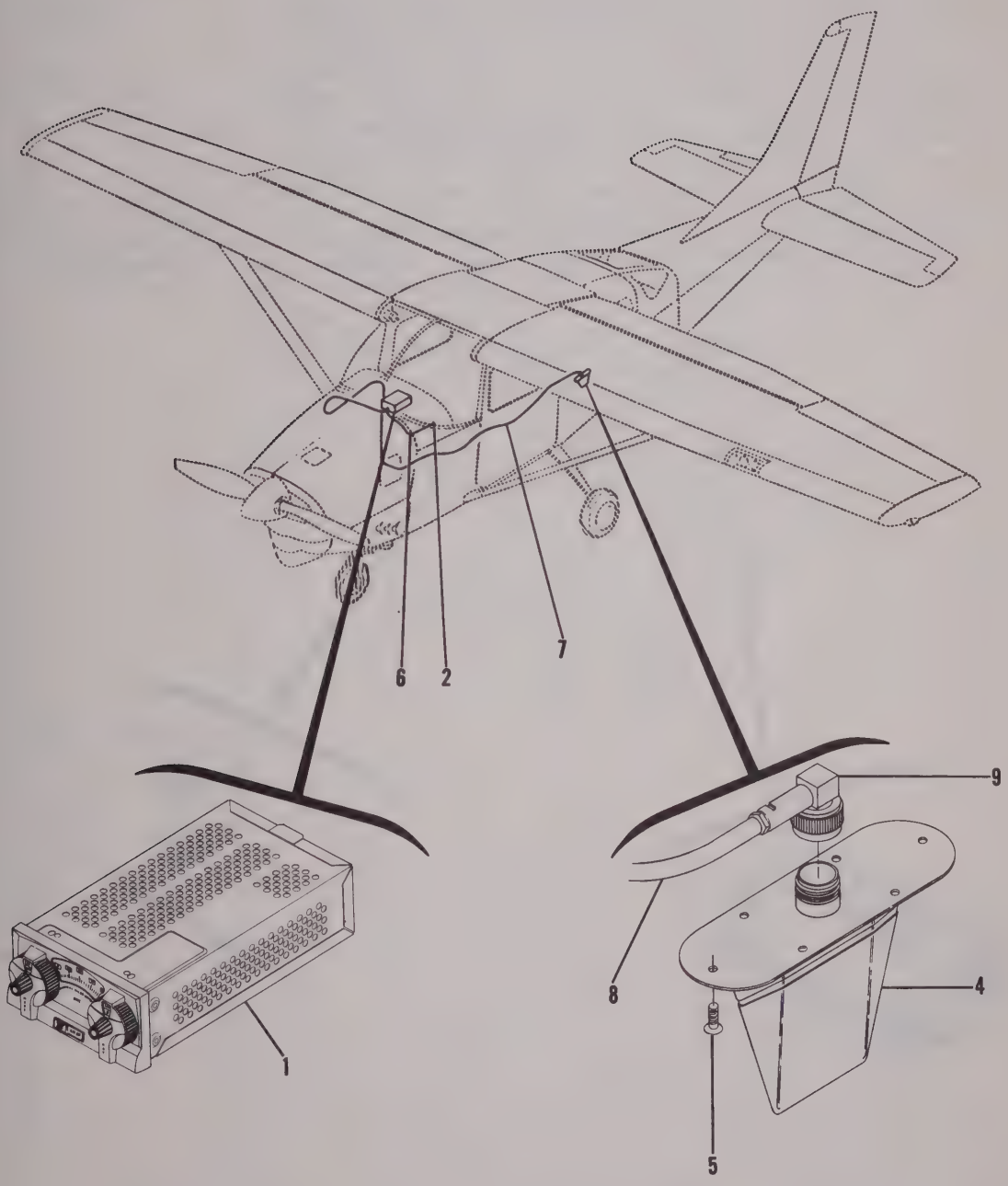


## 210 SERIAL 21058711 & ON
## T210 SERIAL T210-0001 & ON

Figure 3-7. King KN-60 DME Radio Installation - Sheet 5

KING KN-60 DME RADIO INSTALLATION

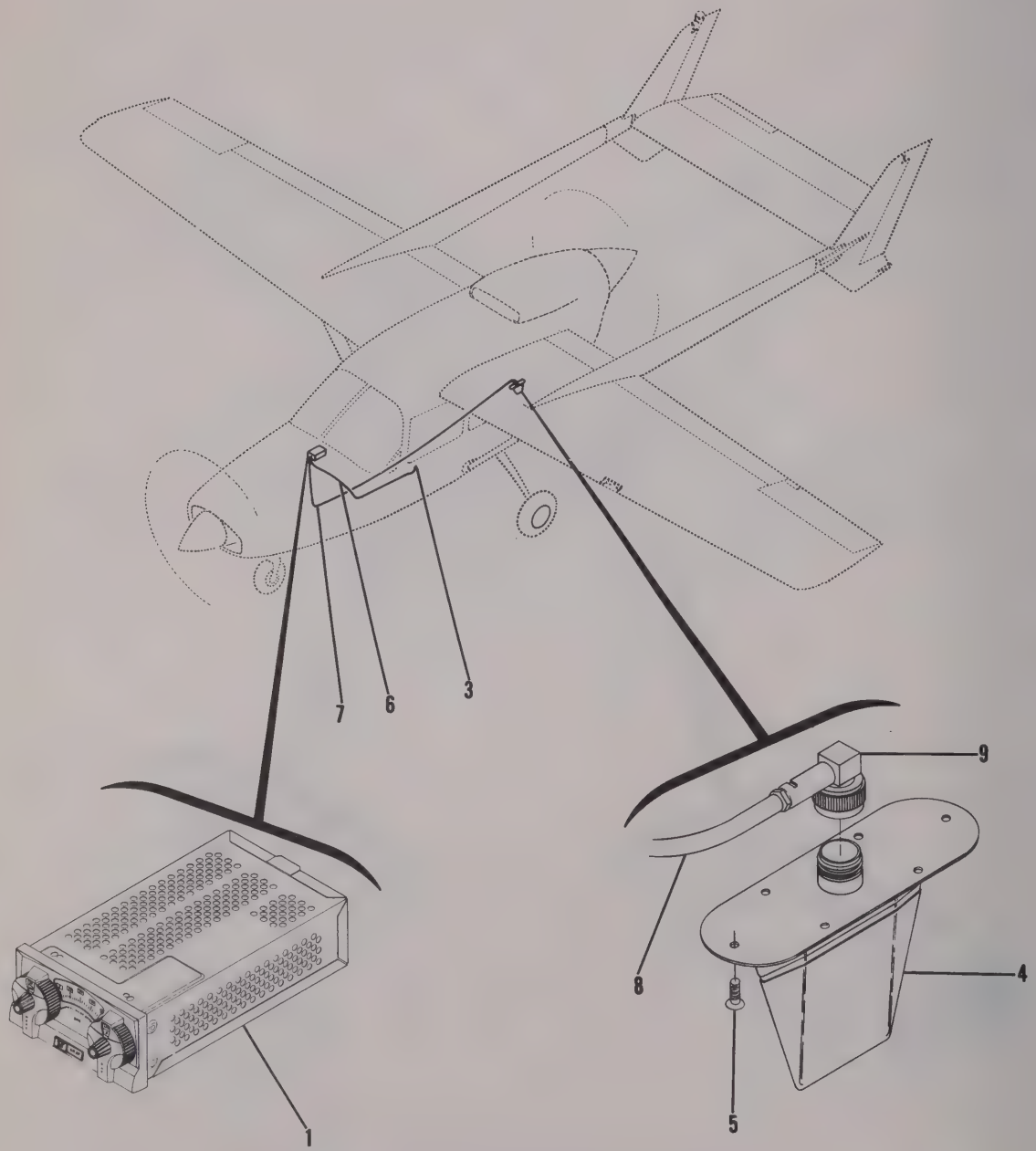


## 337 SERIAL 337-0240 & ON

Figure 3-7. King KN-60 DME Radio Installation - Sheet 6

| FIGURE AND INDEX NO. | PART NUMBER | DESCRIPTION<br>1 2 3 4 5 6 7 | UNITS PER ASSY | USABLE ON CODE |
|---|---|---|---|---|
| 3-7- | | KING KN-60 DME RADIO INSTALLATION 1966 & ON ALL MODELS EXCEPT MODEL 150 | N/P | |
| - 1 | KN-60 | * DME UNIT KG | 1 | |
| | | ATTACHING PARTS | | |
| | S1021Z8-6 | SCREW | 4 | |
| | NAS446-4-3 | NUT | 4 | |
| | | ---*--- | | |
| - 2 | S1360-10 | CIRCUIT BREAKER ALL MODELS EXCEPT 337 | 1 | |
| - 3 | S1360-5 | CIRCUIT BREAKER 337 ONLY | 1 | |
| - 4 | KA-15 | * DME ANTENNA-----KG | 1 | |
| | | ATTACHING PARTS | | |
| | A6K75 | RIVNUT | 6 | |
| - 5 | AN507-632R8 | SCREW | 6 | |
| | | ---*--- | | |
| | | RADIO COOLING INSTALLATION---- SEE FIGURE 10-1 | 1 | |
| | | SELECTOR SWITCH & ISOLATION AMPLIFIER INSTALLATION-----SEE FIGURE 9-1 | 1 | |
| - 6 | | CABLE ASSY - MAIN CABLE ASSY | N/P | |
| | 030-2043-00 | * PLUG - 8 PIN KG | 1 | |
| - 7 | | CABLE ASSY - DME UNIT TO DME ANT | N/P | |
| - 8 | 024-0001-00 | * RF CABLE KG | 1 | |
| - 9 | 030-0024-00 | * CONNECTOR - RIGHT ANGLE ----KG | 1 | |
| | 030-0021-01 | * CONNECTOR-----KG | 1 | |

* SUPPLIED WHEN COMPLETE RADIO IS PURCHASED

# SECTION IV

# MOTOROLA AUTOMATIC DIRECTION FINDER

TABLE OF CONTENTS


| Figure | | Page |
|---|---|---|
| 4-1 | Bendix ADF-T12C Radio Installation (Formerly Motorola ADF-T12) | 4-2 |

BENDIX ADF-T12C RADIO INSTALLATION
(FORMERLY MOTOROLA ADF-T12B)

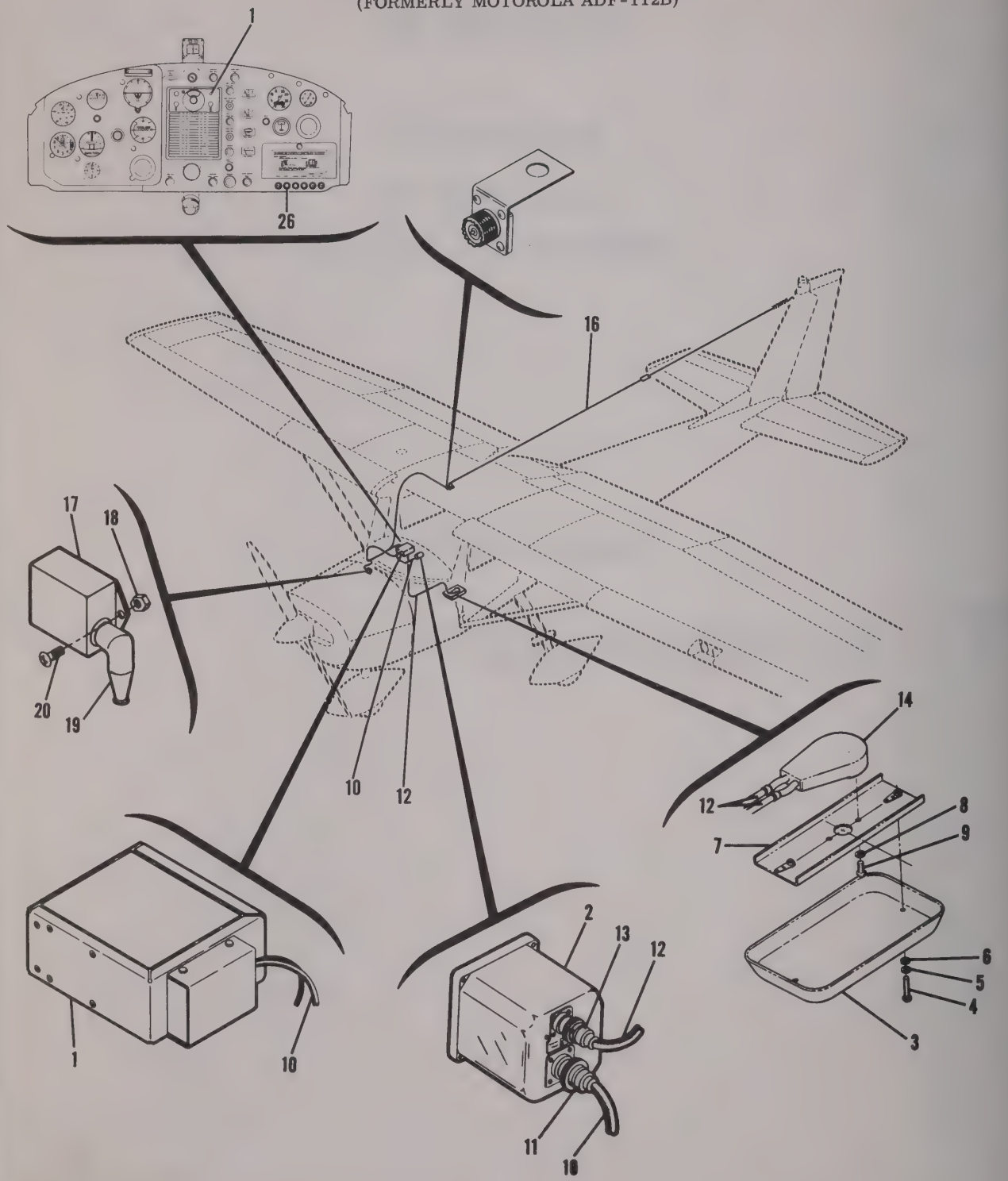


## 150 SERIAL 15061533 & ON

Figure 4-1. Bendix ADF-T12C (Formerly Bendix ADF-T12B) Radio Installation - Sheet 1

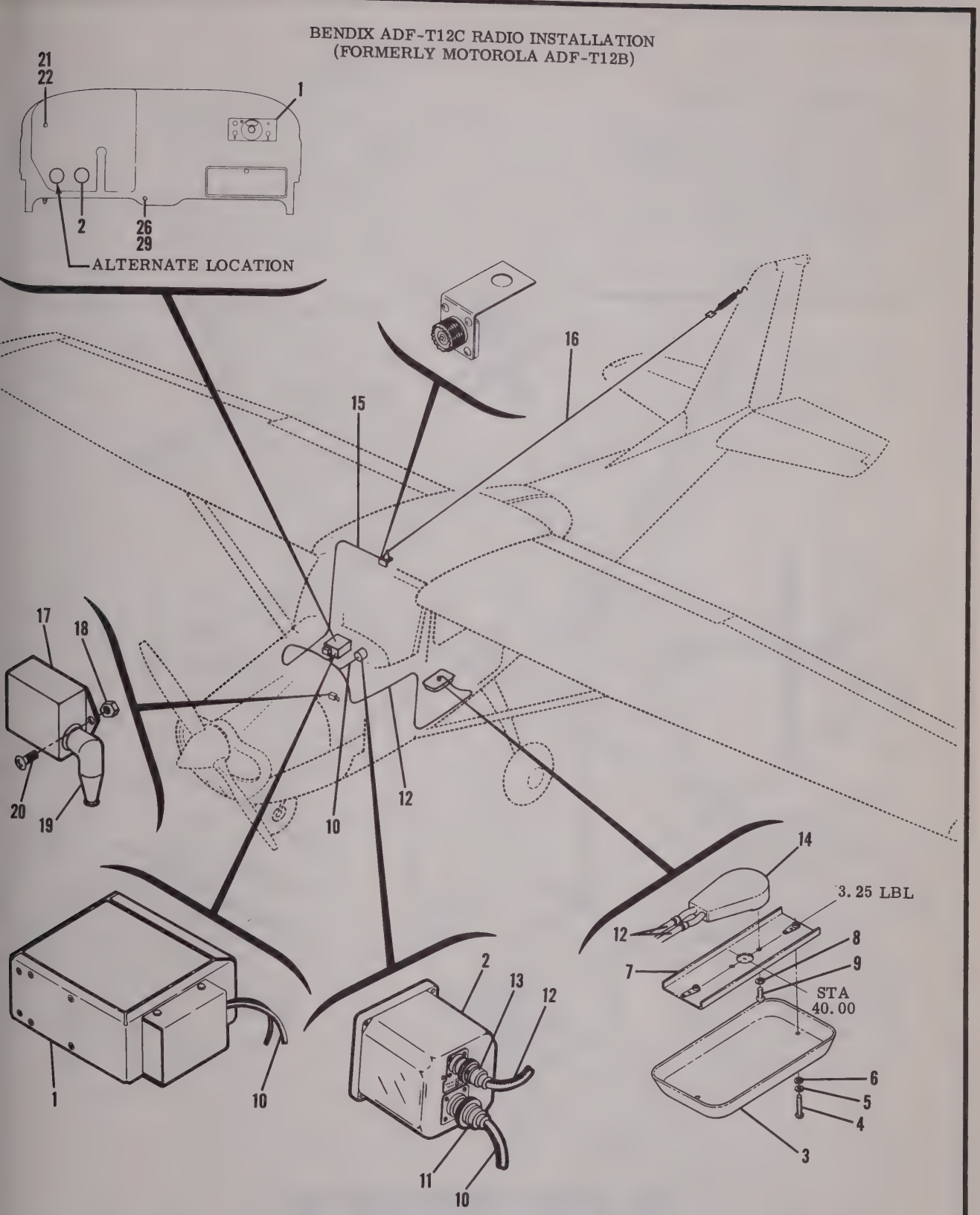


**172 SERIAL 17249545 & ON**
**P172 SERIAL P17257120 & ON**

Figure 4-1. Bendix ADF-T12C (Formerly Bendix ADF-T12B) Radio Installation - Sheet 2

BENDIX ADF-T12C RADIO INSTALLATION
(FORMERLY MOTOROLA ADF-T12B)

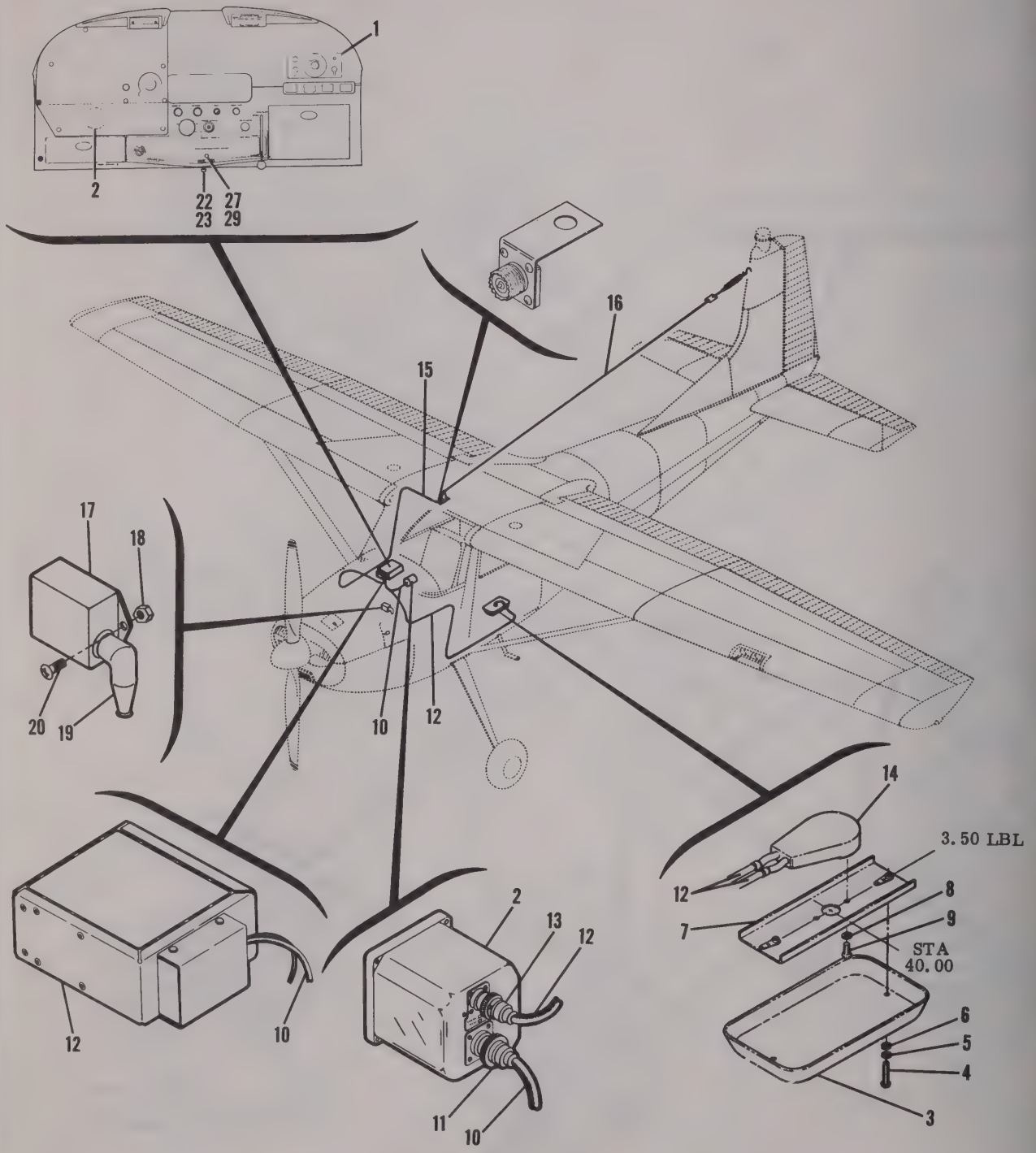


**180 SERIAL 18051184 & ON**
**185 SERIAL 185-0498 & ON**

Figure 4-1. Bendix ADF-T12C (Formerly Bendix ADF-T12B) Radio Installation - Sheet 3

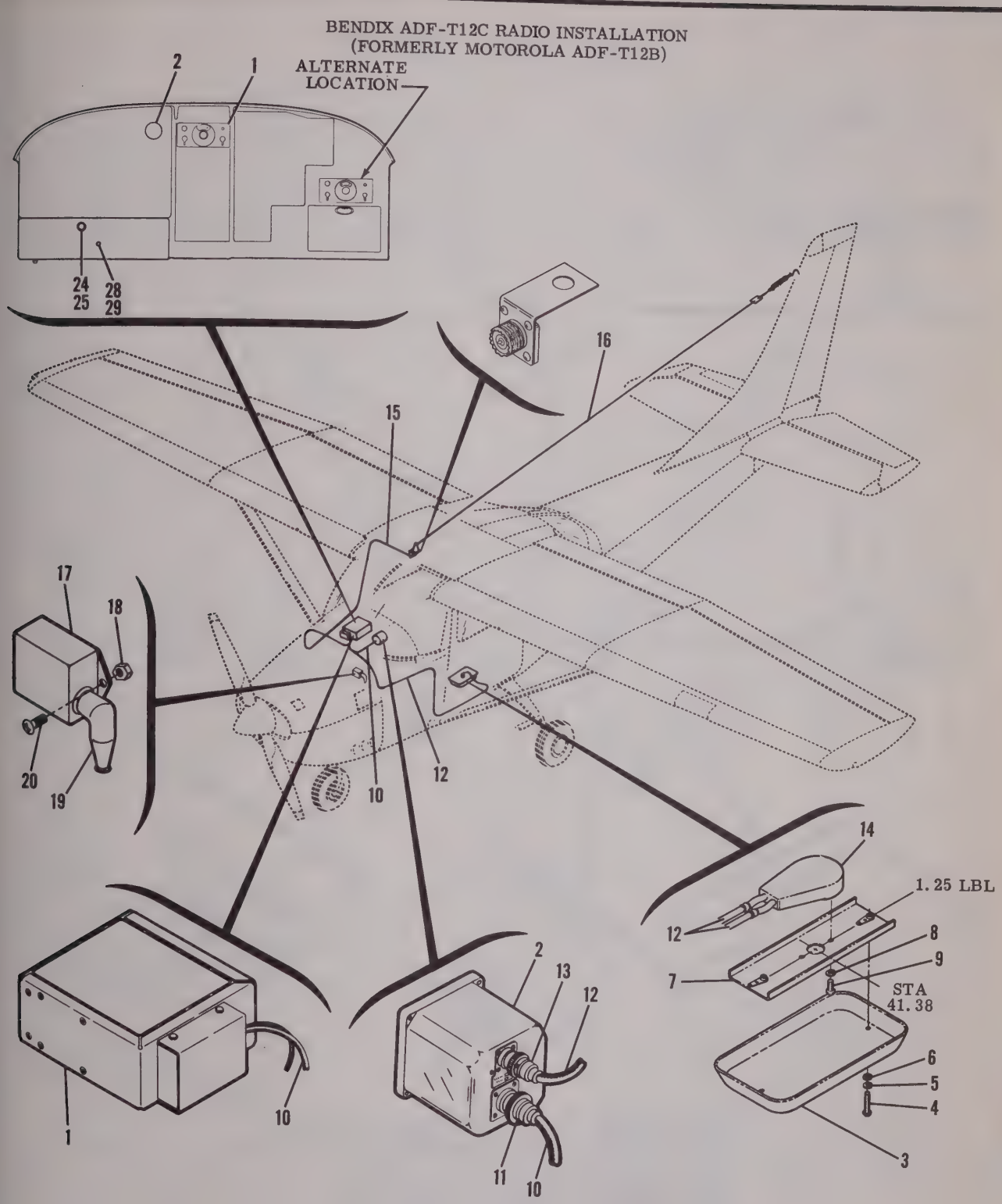


## 182 SERIAL 18254347 & ON

Figure 4-1. Bendix ADF-T12C (Formerly Bendix ADF-T12B) Radio Installation - Sheet 4

BENDIX ADF-T12C RADIO INSTALLATION
(FORMERLY MOTOROLA ADF-T12B)

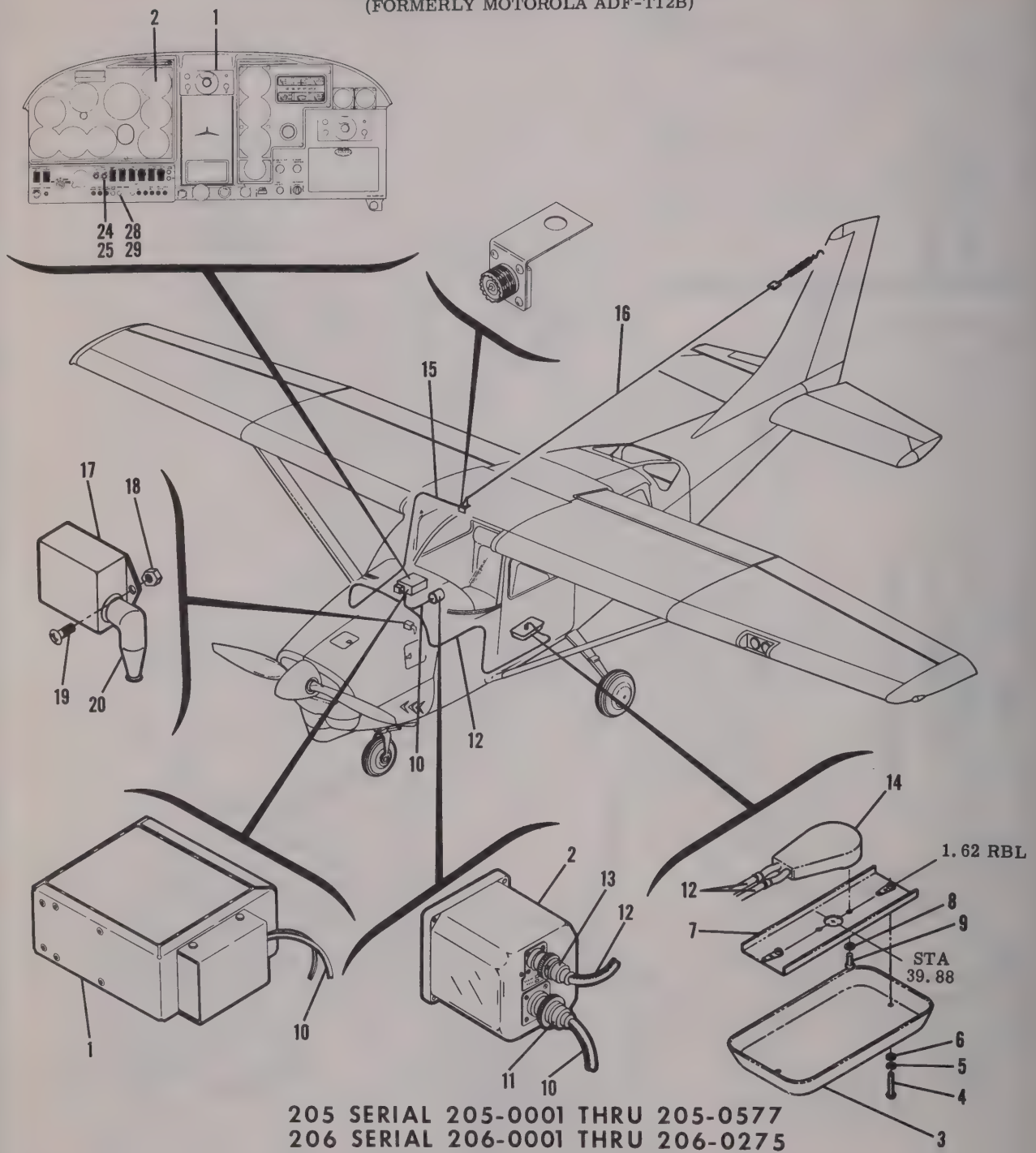


205 SERIAL 205-0001 THRU 205-0577
206 SERIAL 206-0001 THRU 206-0275
P206 SERIAL P206-0161 & ON
U206 SERIAL U206-0438 & ON
TP206 SERIAL TP206-0161 & ON
TU206 SERIAL TU206-0438 & ON
210 SERIAL 21058111 & ON
T210 SERIAL T210-0001 & ON

Figure 4-1. Bendix ADF-T12C (Formerly Bendix ADF-T12B) Radio Installation - Sheet 5

BENDIX ADF-T12C RADIO INSTALLATION
(FORMERLY MOTOROLA ADF-T12B)

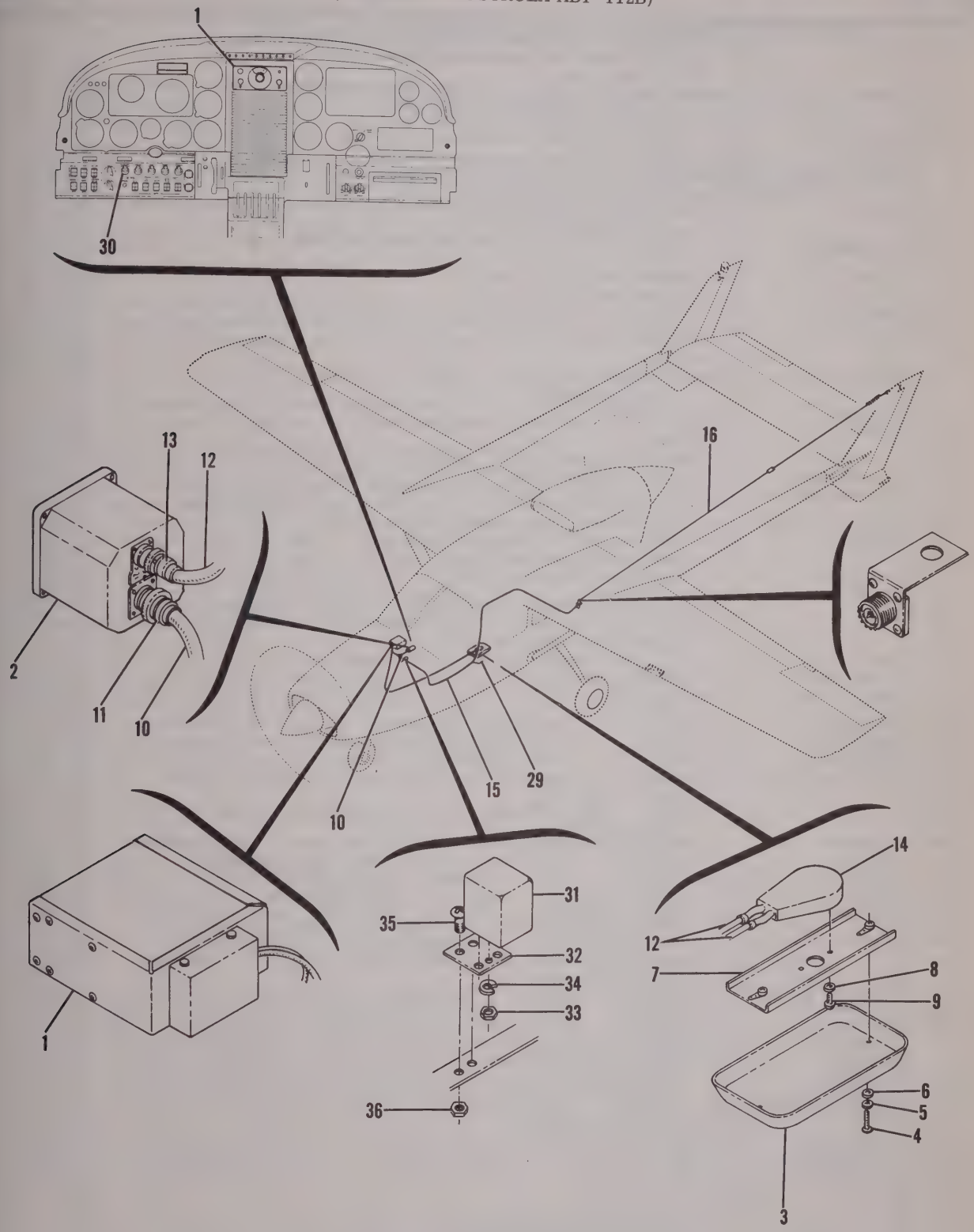


## 337 SERIAL 337-0001 & ON

Figure 4-1. Bendix ADF-T12C (Formerly Bendix ADF-T12B) Radio Installation - Sheet 6

| FIGURE AND INDEX NO. | PART NUMBER | DESCRIPTION<br>1 2 3 4 5 6 7 | UNITS PER ASSY | USABLE ON CODE |
|---|---|---|---|---|
| 4-1- | | BENDIX ADF-T12C RADIO INSTALLATION - ALL MODELS---------- 1966 & ON FORMERLY MOTOROLA ADF-T12B RADIO INSTALLATION FOR ALL MODELS EXCEPT 150, 336 & 337 THRU 1965. | N/P | |
| - 1 | 201D | * RECEIVER BX REPLACES 201A RECEIVER ---------- SUPPLIED BY MOTOROLA THRU 1965 | 1 | |
| | | ATTACHING PARTS | | |
| | S1021Z6-6 | SCREW ---------- | 4 | |
| | AN960-6L | WASHER---------- | 4 | |
| | NAS446-2-3 | NUT ---------- | 4 | |
| | | ---*--- | | |
| - 2 | 551A | * INDICATOR & SERVO AMPLIFIER BX ---------- | 1 | |
| | | ATTACHING PARTS | | |
| | AN515B6R10 | SCREW ---------- | 3 | |
| | | ---*--- | | |
| - 3 | 2321E | * ANTENNA ASSY-FIXED LOOP ---------- | 1 | |
| | | ATTACHING PARTS | | |
| - 4 | AN515-8R16 | SCREW ---------- | 2 | |
| - 5 | AN960-8L | WASHER---------- | 2 | |
| - 6 | S350 | WASHER-SEALING ---------- | 2 | |
| | | ---*--- | | |
| - 7 | 62B102-01 | * LOOP MOUNTING PLATE BX---------- | 1 | |
| | | ATTACHING PARTS | | |
| - 8 | AN936A6 | LOCKWASHER ---------- | 2 | |
| - 9 | AN5156R8 | SCREW ---------- | 2 | |
| | | ---*--- | | |
| - 10 | | * CABLE ASSY-RECEIVER TO INDICATOR & SERVO AMLIFIER ---------- | NP | |
| | 26-4200-16S | * PLUG 16 CONTACT-RECEIVER END-----BX ---------- | 1 | |
| - 11 | GK-9-21C-1/2 | * PLUG 9 PIN FEMALE-INDICATOR END BX---------- | 1 | |
| - 12 | | * CABLE ASSY-INDICATOR & SERVO AMPLIFIER TO FIXED LOOP ---- | NP | |
| - 13 | WK-4-21C-5/16 | * RECEPTACLE 4 PIN FEMALE-INDICATOR END BX --------- | 1 | |
| - 14 | 716144 | * RECEPTACLE 7 PINS-FIXED LOOP END BX ---------- | 1 | |
| - 15 | | * CABLE ASSY-RECEIVER TO SENSE ANT ---------- | NP | |
| | RG-114/U | * COAXIAL CABLE-BULK ITEM ---------- | AR | |
| | PL-259 | * PLUG-COAXIAL ---------- | 2 | |
| - 16 | | ADF SENSE ANTENNA INSTALLATION-----SEE FIGURE 8-6 --------- | 1 | |
| - 17 | | RADIO NOISE FILTER SEE FIGURE 9-5 ---------- | A/R | |
| | | ATTACHING PARTS | | |
| - 18 | MS20365-832C | NUT ---------- | 2 | |
| - 19 | NAS446-4-3 | NIPPLE---------- | 1 | |
| - 20 | AN515-8R6 | SCREW ---------- | 2 | |
| | | ---*--- | | |
| - 21 | 0413126-9 | RHEOSTAT 150, 172 & P172 ONLY ---------- | 1 | |
| - 22 | S1390-3 | KNOB 150, 172, P172, 180 & 185 ONLY ---------- | 1 | |
| - 23 | 0413126-5 | RHEOSTAT 180 & 185 ONLY ---------- | 1 | |
| - 24 | R12 1/2-75-RS34 | RHEOSTAT 182, 205, 206, P206, U206, TP206, TU206, ---- | 1 | |
| | | 210 & T210 ONLY | | |
| - 25 | S1163-2 | KNOB 182, 205, 206, P206, U206, TP206, TU206, --------- | 1 | |
| | | 210 & T210 ONLY | | |
| - 26 | S1090-3 | FUSE HOLDER ASSY-----172 & P172 THRU 1964 & ALL 150 MODELS | 1 | |
| | S1090-12 | CAP-10A 172 & P172 THRU 1964 & ALL 150 MODELS ---- | 1 | |
| | S1091-10 | FUSE-10A 172 & P172 THRU 1964 & ALL 150 MODELS--------- | 1 | |
| - 27 | PSM-10N | CIRCUIT BREAKER 180 & 185 THRU 1963 ONLY ---------- | 1 | |
| - 28 | S1360-5 | CIRCUIT BREAKER 182, 205, 206, P206, U206 & 210 THRU | 1 | |
| | | 1965 ONLY, AND 172, 180 & 185 1964 THRU 1965 ONLY | | |
| - 29 | S1360-2 | CIRCUIT BREAKER ALL MODELS EXCEPT 150 1966 & ON ---- | 1 | |
| - 30 | | DROPPING RESISTOR - FLT INST & RADIO DIAL LT 337 ONLY | 1 | |
| | | SEE FIGURE 10-2 | | |
| | 1570001-240 | CABLE ASSY - RELAY 337 ONLY ---------- | 1 | |
| - 31 | KHP17D11 | RELAY PBR ---------- | 1 | |
| - 32 | 1470085-2 | BRACKET ---------- | 1 | |
| | 5 OHM 10W | RESISTOR ---------- | 1 | |
| | AN340-3 | NUT ---------- | 1 | |
| - 33 | AN936A4 | LOCK WASHER ---------- | 1 | |
| - 34 | S1367-1-8 | TERMINAL ---------- | 1 | |
| | FIT-105 3/32X.80 | TUBING ALW---------- | 8 | |
| | | ATTACHING PARTS | | |
| - 35 | AN515-6R6 | SCREW ---------- | 2 | |
| - 36 | MS20365-632C | NUT ---------- | 2 | |
| | | ---*--- | | |

CONTINUED ON NEXT PAGE

| FIGURE AND INDEX NO. | PART NUMBER | DESCRIPTION<br>1 2 3 4 5 6 7 | UNITS PER ASSY | USABLE ON CODE |
|---|---|---|---|---|
| 4-1- | | NOTE. ITEMS LISTED BELOW ARE OPTIONAL AND ONLY REQUIRED WHEN STANDARD CIRCUIT BREAKER LOCATIONS ARE FULL. 182, 205 & 210 THRU 1964 ONLY | | |
| | 1270640-1 | STRAP 182, 205 & 210 THRU 1964 ONLY ---------- | 1 | |
| | AN507-632R6 | SCREW 182, 205 & 210 THRU 1964 ONLY ---------- | 2 | |
| | MS20365-632C | NUT 182, 205 & 210 THRU 1964 ONLY ---------- | 2 | |
| | | NOTE. THIS INSTALLATION IS DESIGNED TO BE INSTALLED WITH OTHER RADIO INSTALLATIONS. REFER TO OTHER RADIO INSTALLATIONS FOR HEADSET AND SPEAKER REQUIREMENTS. | | |
| | | * ITEMS MARKED WITH ASTERISK SUPPLIED WHEN COMPLETE RADIO IS PURCHASED | | |

# SECTION V

# NARCO ELECTRONIC EQUIPMENT

TABLE OF CONTENTS


| Figure | | Page |
|---|---|---|
| 5-1 | Narco Mark II Omnigator Radio Installation | 5-2 |
| 5-2 | Narco Mark IV Superhomer Radio Installation | 5-11 |
| 5-3 | Narco Mark V Radio Installation | 5-15 |
| 5-4 | Narco Mark X Radio Installation | 5-25 |
| 5-5 | Narco MBT-12 Marker Beacon Receiver Installation | 5-34 |
| 5-6 | Narco UDI-2 DME Installation | 5-38 |
| 5-7 | Narco (UGR-1) Glide Slope Receiver Installation | 5-44 |
| 5-8 | Narco Mark XII With VOA-4, VOA-5 or VOA-6 Radio Installations | 5-53 |
| 5-9 | Narco Mark VII Radio Installation | 5-64 |

NARCO MARK II OMNIGATOR RADIO INSTALLATION

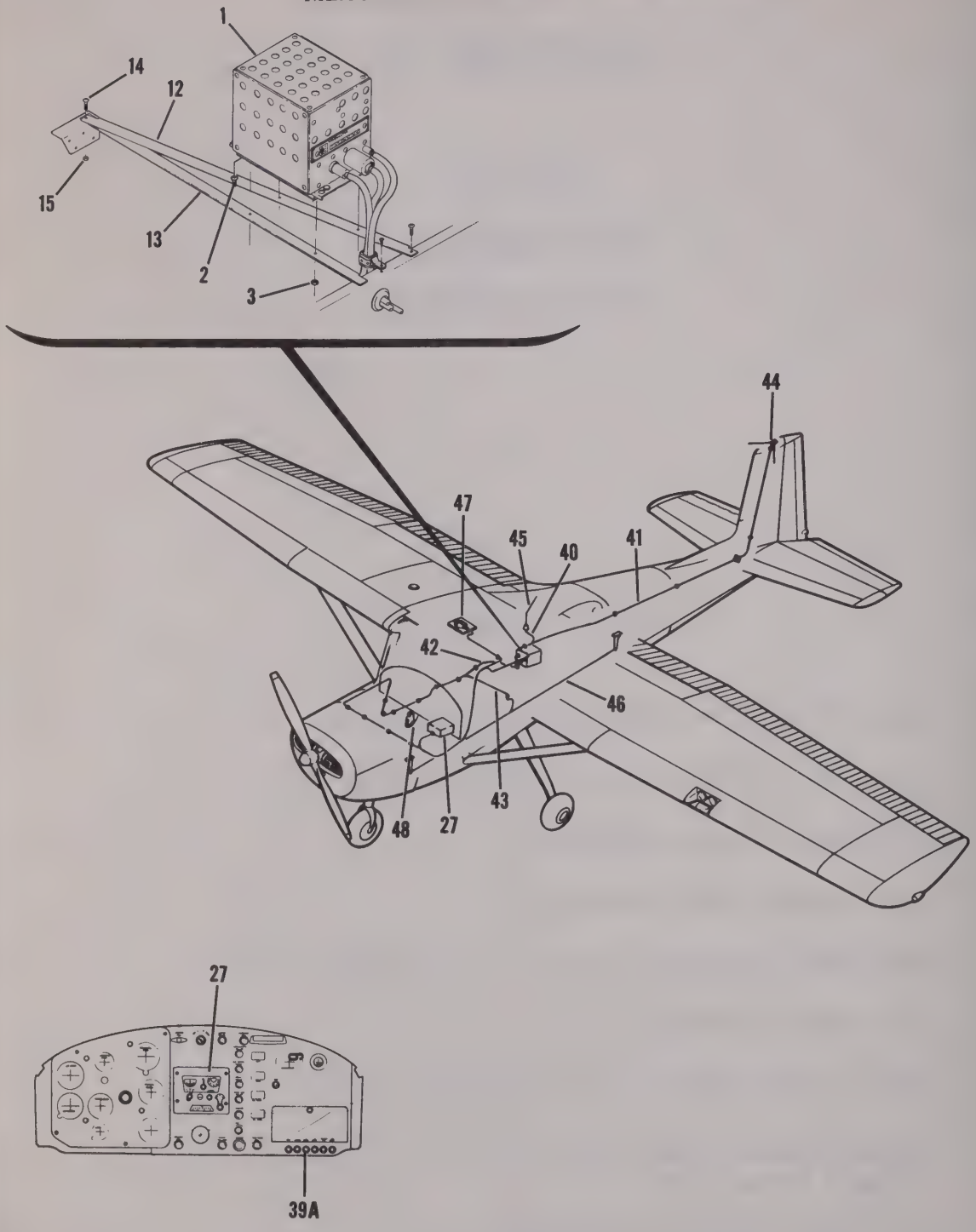


## 150 SERIAL 15059711 THRU 15060087

Figure 5-1. Narco Mark II Omnigator Radio Installation (Sheet 1 of 6)

NARCO MARK II OMNIGATOR RADIO INSTALLATION

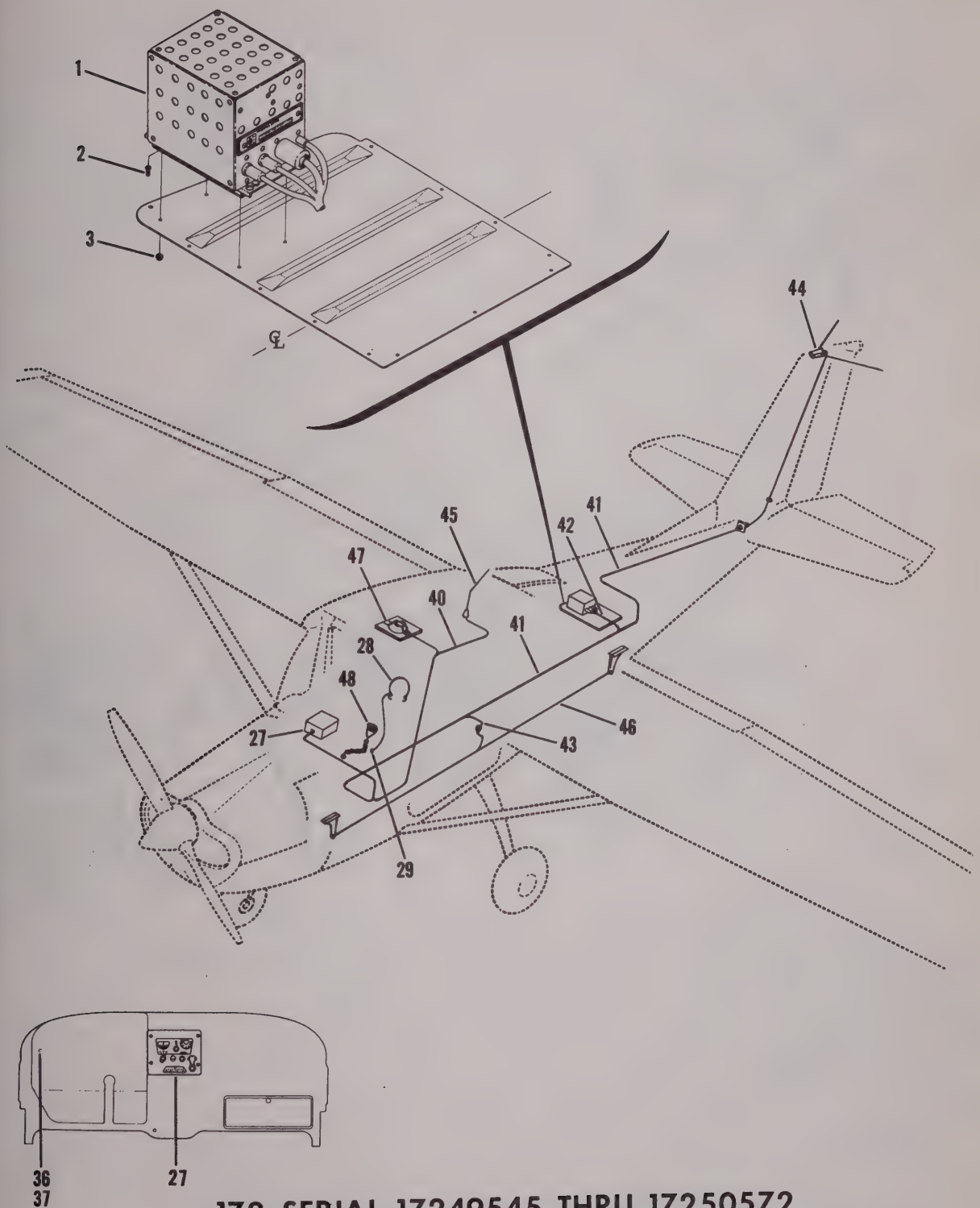


**172 SERIAL 17249545 THRU 17250572**
**P172 SERIAL P17257120 THRU P17257188**

Figure 5-1. Narco Mark II Omnigator Radio Installation (Sheet 2 of 6)

NARCO MARK II OMNIGATOR RADIO INSTALLATION

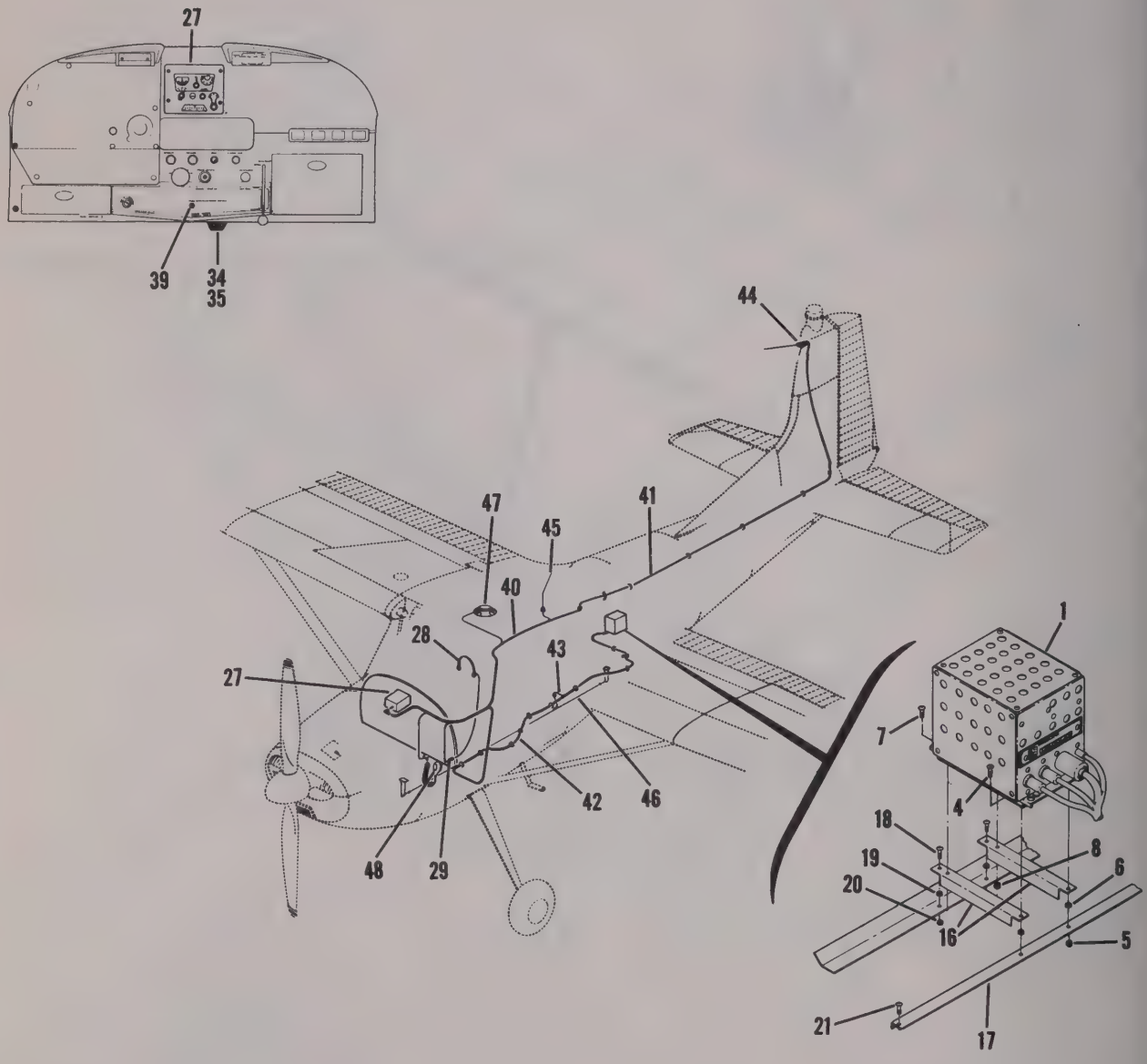


## 180 SERIAL 18051184 THRU 18051312
## 185 SERIAL 185-0498 THRU 185-0653

Figure 5-1. Narco Mark II Omnigator Radio Installation (Sheet 3 of 6)

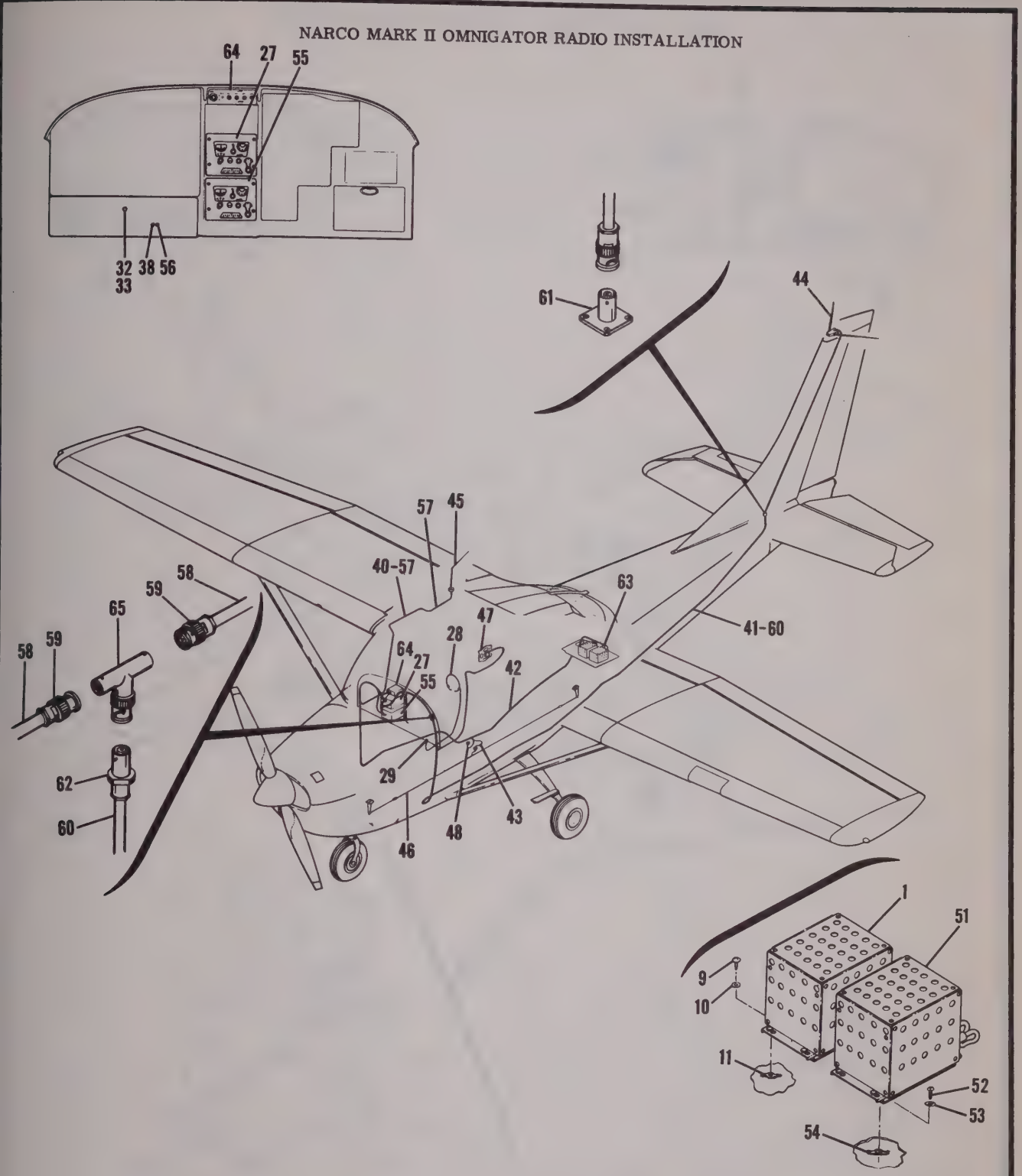


## 182 SERIAL 18254347 THRU 18255058

Figure 5-1. Narco Mark II Omnigator Radio Installation (Sheet 4 of 6)

NARCO MARK II OMNIGATOR RADIO INSTALLATION

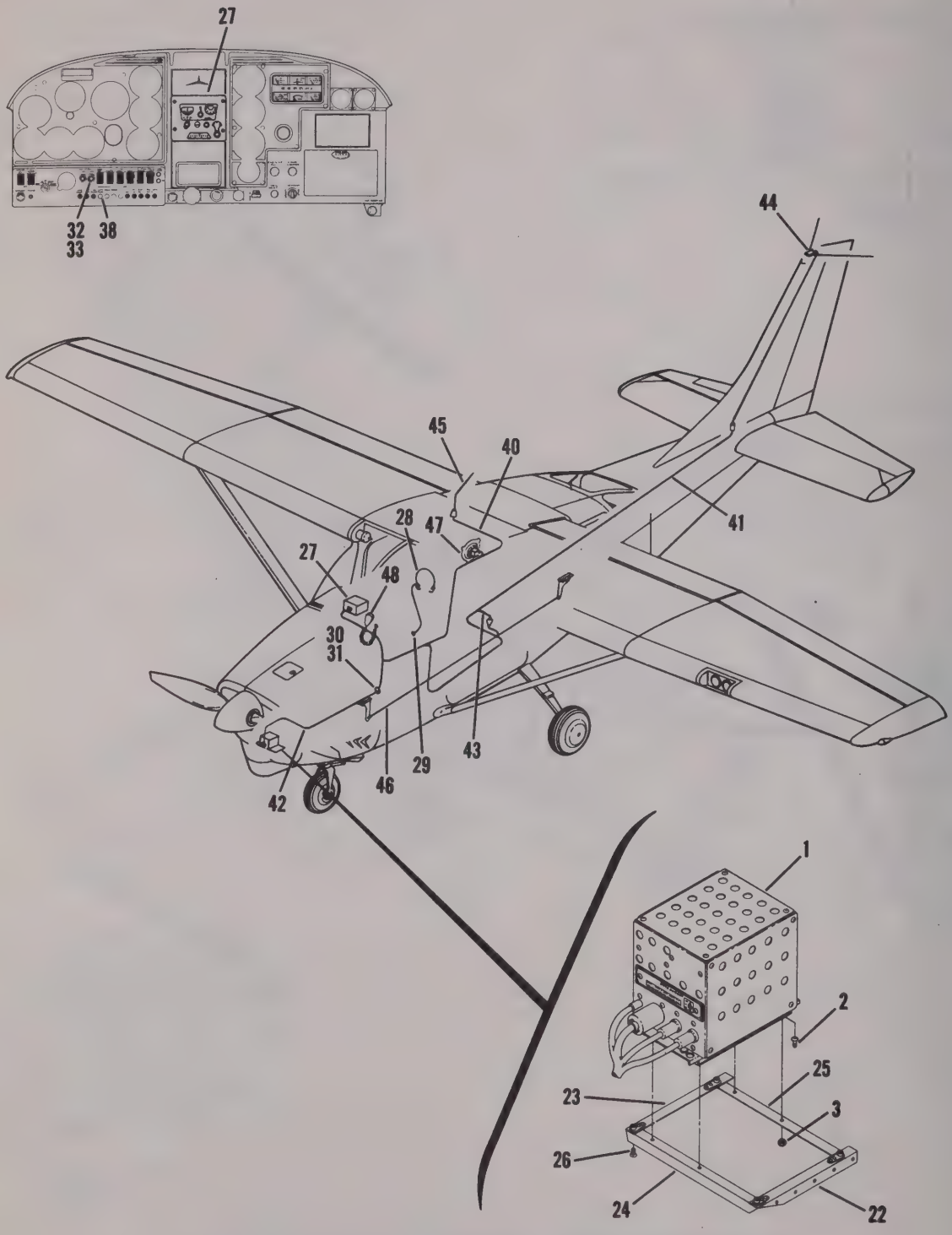


## 205 SERIAL 205-0001 THRU 205-0480

Figure 5-1. Narco Mark II Omnigator Radio Installation (Sheet 5 of 6)

NARCO MARK II OMNIGATOR RADIO INSTALLATION

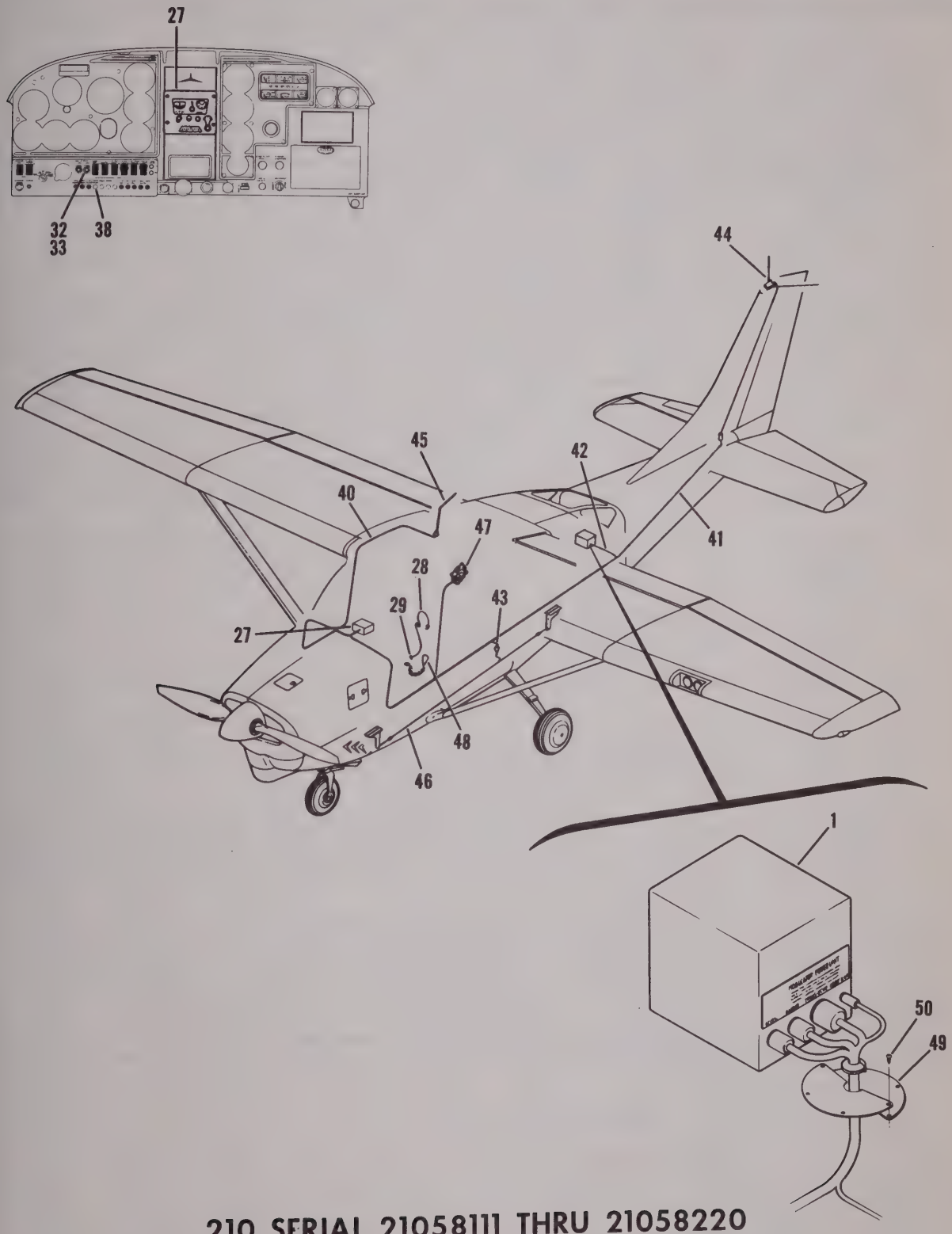


210 SERIAL 21058111 THRU 21058220

Figure 5-1. Narco Mark II Omnigator Radio Installation (Sheet 6 of 6)

| FIGURE AND INDEX NO. | PART NUMBER | DESCRIPTION<br>1 2 3 4 5 6 7 | UNITS PER ASSY | USABLE ON CODE |
|---|---|---|---|---|
| 5-1- | | RADIO INSTALLATION-NARCO OMNIGATOR HIGH & LOW BANDS | NP | |
| - 1 | V12MP-2A | * POWER UNIT | 1 | |
| | | ATTACHING PARTS | | |
| - 2 | AN520-10R10 | SCREW 150, 172, 205 & 210 | 4 | |
| - 3 | MS20365-1032C | NUT 150, 172, 205 & 210 | 4 | |
| - 4 | AN515-8R10 | SCREW 180 & 185 ONLY | 2 | |
| - 5 | MS20365-832C | NUT 180 & 185 ONLY | 2 | |
| - 6 | S355-2 | SPACER 180 & 185 ONLY | 2 | |
| - 7 | AN515-8R6 | SCREW 180 & 185 ONLY | 4 | |
| - 8 | MS20365-832C | NUT 180 & 185 ONLY | 4 | |
| - 9 | AN515-8R16 | SCREW 182 ONLY | 4 | |
| - 10 | AN936A8 | WASHER 182 ONLY | 4 | |
| - 11 | A8K75 | RIVNUT GD 182 ONLY | 4 | |
| | | ---*--- | | |
| - 12 | 0410112-36 | ANGLE 150 ONLY | 1 | |
| - 13 | 0410112-37 | ANGLE 150 ONLY | 1 | |
| | | ATTACHING PARTS | | |
| - 14 | AN520-10R8 | SCREW 150 ONLY | 3 | |
| - 15 | MS20365-1032C | NUT 150 ONLY | 3 | |
| | | ---*--- | | |
| - 16 | 0511030-7 | ANGLE 180 & 185 ONLY | 2 | |
| - 17 | 0770049-1 | ANGLE 180 & 185 ONLY | 1 | |
| | | ATTACHING PARTS | | |
| - 18 | AN515-8R10 | SCREW 180 & 185 ONLY | 2 | |
| - 19 | S355-2 | SPACER 180 & 185 ONLY | 2 | |
| - 20 | MS20365-823C | NUT 180 & 185 ONLY | 2 | |
| | | ---*--- | | |
| - 21 | AN515-8R10 | SCREW 180 & 185 ONLY | 2 | |
| | S355-2 | SPACER 180 & 185 ONLY | 2 | |
| | MS20365-832C | NUT 180 & 185 ONLY | 2 | |
| | | ---*--- | | |
| - 22 | 1270627-17 | SIDE ANGEL ASSY L.H. 205 ONLY | 1 | |
| | NAS697A3 | NUTPLATE 205 ONLY | 1 | |
| | NAS696A3 | NUTPLATE 205 ONLY | 1 | |
| | 1270627-19 | SIDE ANGLE 205 ONLY | 1 | |
| - 23 | 1270627-18 | SIDE ANGLE ASSY R.H. 205 ONLY | 1 | |
| | NAS697A3 | NUTPLATE 205 ONLY | 1 | |
| | NAS696A3 | NUTPLATE 205 ONLY | 1 | |
| | 1270627-20 | SIDE ANGEL 205 ONLY | 1 | |
| - 24 | 1270627-60 | ATTACH ANGLE-FRONT 205 ONLY | 1 | |
| - 25 | 1270627-61 | ATTACH ANGLE-REAR 205 ONLY | 1 | |
| | | ATTACHING PARTS | | |
| - 26 | AN515-10R6 | SCREW 205 ONLY | 4 | |
| | | ---*--- | | |
| - 27 | VTR-2A | * OMNIGATOR LOW BAND | 1 | |
| | VTR-2AH | * OMNIGATOR HIGH BAND | 1 | |
| | | ATTACHING PARTS | | |
| | S1021Z6-6 | SCREW ALL MODELS EXCEPT 172 & P172 | 4 | |
| | AN960-6L | WASHER ALL MODELS EXCEPT 172 & P172 | 4 | |
| | NAS446-2-3 | NUT ALL MODELS EXCEPT 172 & P172 | 4 | |
| | S1021Z8-6 | SCREW 172 & P172 ONLY | 1 | |
| | NAS395-18-3 | NUT 172 & P172 ONLY | 1 | |
| | NAS43-4-32 | SPACER 180 & 185 ONLY | 1 | |
| | | ---*--- | | |
| - 28 | 0770039-1 | HEADSET ALL MODELS EXCEPT 150 | 1 | |
| - 29 | S1103-1 | PHONE JACK ALL MODELS EXCEPT 150 | 1 | |
| - 30 | 1213614-7 | COVER ASSY 205 ONLY | 1 | |
| - 31 | 1213614-8 | COVER ASSY 205 ONLY | 1 | |
| - 32 | 0111-351 | RHEOSTAT 182, 205 & 210 ONLY | 1 | |
| - 33 | S1163-2 | KNOB 182, 205 & 210 ONLY | 1 | |
| - 34 | 0413126-5 | RHEOSTAT 180 & 185 ONLY | 1 | |
| - 35 | 0413126-3 | KNOB 180 & 185 ONLY | 1 | |
| - 36 | 0413126-9 | RHEOSTAT 172 ONLY | 1 | |
| - 37 | 1450 | KNOB 172 ONLY | 1 | |

CONTINUED ON NEXT PAGE

| FIGURE AND INDEX NO. | PART NUMBER | DESCRIPTION 1 2 3 4 5 6 7 | UNITS PER ASSY | USABLE ON CODE |
|---|---|---|---|---|
| 5-1- 38 | S1232-10 | CIRCUIT BREAKER 182, 205 & 210 ONLY | 1 | |
| - 39 | PSM-10N | CIRCUIT BREAKER 180 & 185 ONLY | 1 | |
| -39A | S1090-3 | FUSE HOLDER ASSY-----150, 172 & P172 | 1 | |
| | S1090-12 | CAP-10A 150, 172 & P172 ONLY | 1 | |
| | S1091-10 | FUSE-10A 150, 172 & P172 ONLY | 1 | |
| - 40 | | CABLE ASSY-OMNIGATOR TO VHF TRANSMITTING ANTENNA | NP | |
| | RG-58A/U | COAXIAL CABLE-BULK ITEM | AR | |
| | 13A | * PLUG-----RCA PHONO TYPE | 1 | |
| | AMP22-18 | TERMINAL | 1 | |
| - 41 | | CABLE ASSY-OMNIGATOR TO OMNI ANTENNA | NP | |
| | RG-58A/U | COAXIAL CABLE-BULK ITEM | AR | |
| | 13B | * PLUG-----MOTOROLA TYPE | 1 | |
| | UG-88C/U | PLUG-----180, 182, 185, 205 & 210 | 1 | |
| | UG-291/U | RECEPTACLE-COAXIAL 150, 172 & P172 | 1 | |
| | | CABLE ASSY-AUDIO CABLE-POWER UNIT TO SPKR, MIC & PHONES | NP | |
| | 91-MPF6S | * RECEPTACLE 6 PIN | 1 | |
| - 42 | | CABLE ASSY-OMNIGATOR TO POWER UNIT | NP | |
| | 86-PM11 | * PLUG 11 PIN | 1 | |
| | 86-PF11 | * RECEPTACLE 11 PIN | 1 | |
| - 43 | | CABLE ASSY-OMNIGATOR TO MARKER BEACON ANTENNA | NP | |
| | RG-58A/U | COAXIAL CABLE-BULK ITEM | AR | |
| | AMP-31882 | TERMINAL | 1 | |
| | AMP-31905 | TERMINAL | 1 | |
| | 13E | * PLUG-MOTOROLA TYPE | 1 | |
| - 44 | | OMNI ANTENNA INSTALLATION ----SEE FIGURE 8-2 | 1 | |
| - 45 | | VHF ANTENNA INSTALLATION SEE FIGURE 8-1 | 1 | |
| - 46 | | MARKER BEACON ANTENNA INSTALLATION SEE FIGURE 8-4 | 1 | |
| - 47 | | SPEAKER INSTALLATION SEE FIGURE 9-3 | 1 | |
| - 48 | | MICROPHONE INSTALLATION SEE FIGURE 9-4 | 1 | |
| - 49 | 1270014-1 | PLATE-COVER-----210 ONLY | 2 | |
| | | ATTACHING PARTS | | |
| - 50 | S1021Z8-8 | SCREW 210 ONLY | 6 | |
| | | ---*--- | | |
| | 0770622-1 | FILTER-MAGNETO 150 & 182 ONLY | 1 | |
| | | DUAL RADIO INSTALLATIONS-THE FOLLOWING PARTS ARE REQUIRED IN ADDITION TO THOSE REQUIRED FOR A SINGLE RADIO INSTALLATION 180, 185, 205 & 210 ONLY | | |
| - 51 | V12MP-2A | * POWER UNIT | 1 | |
| | | ATTACHING PARTS | | |
| | AN520-10R10 | SCREW 150, 172, 205 & 210 ONLY | 4 | |
| | MS20365-1032C | NUT 150, 172, 205 & 210 ONLY | 4 | |
| | AN515-8R10 | SCREW 180 & 185 ONLY | 2 | |
| | MS20365-832C | NUT 180 & 185 ONLY | 2 | |
| | S355-2 | SPACER-----180 & 185 ONLY | 2 | |
| | AN515-8R6 | SCREW 180 & 185 ONLY | 4 | |
| | MS20365-832C | NUT 180 & 185 ONLY | 4 | |
| - 52 | AN515-8R16 | SCREW 182 ONLY | 4 | |
| - 53 | AN936A8 | WASHER-----182 ONLY | 4 | |
| - 54 | A8K75 | RIVNUT-----GD 182 ONLY | 4 | |
| | | ---*--- | | |
| | 0511030-7 | ANGLE 180 & 185 ONLY | 2 | |
| | | ATTACHING PARTS | | |
| | AN515-8R-10 | SCREW 180 & 185 ONLY | 2 | |
| | S355-2 | SPACER-----180 & 185 ONLY | 2 | |
| | MS20365-832C | NUT 180 & 185 ONLY | 2 | |
| | | ---*--- | | |

CONTINUED ON NEXT PAGE

| FIGURE AND INDEX NO. | PART NUMBER | DESCRIPTION<br>1 2 3 4 5 6 7 | UNITS PER ASSY | USABLE ON CODE |
|---|---|---|---|---|
| 5-1- | 1270627-17 | SIDE ANGLE ASSY L.H. 205 ONLY | 1 | |
| | 1270627-18 | SIDE ANGLE ASSY R.H. 205 ONLY | 1 | |
| | 1270627-60 | ATTACH ANGLE-FRONT 205 ONLY | 1 | |
| | 1270627-61 | ATTACH ANGLE-REAR 205 ONLY | 1 | |
| | | ATTACHING PARTS | | |
| | AN515-10R6 | SCREW 205 ONLY | 4 | |
| | | ---*--- | | |
| - 55 | VTR-2A | * OMNIGATOR LOW BAND | 1 | |
| | VTR-2AH | * OMNIGATOR HIGH BAND | 1 | |
| | | ATTACHING PARTS | | |
| | S1021Z6-6 | SCREW ALL MODELS | 4 | |
| | AN960-6L | WASHER-----ALL MODELS | 4 | |
| | NAS446-2-3 | NUT ALL MODELS | 4 | |
| | NAS43-4-32 | SPACER-----180 & 185 ONLY | 1 | |
| | | ---*--- | | |
| | 1213614-6 | COVER ASSY-REPLACES ITEMS 30 & 31 205 ONLY | 2 | |
| - 56 | S1232-10 | CIRCUIT BREAKER 182, 205 & 210 ONLY | 1 | |
| | PSM-10N | CIRCUIT BREAKER 180 & 185 ONLY | 1 | |
| - 57 | | CABLE ASSY-XMTR SELECTOR SW TO XMTR ANT REPLACES ITEM 40 | NP | |
| | RG-58A/U | COAXIAL CABLE-BULK ITEM | AR | |
| | UG-913/U | PLUG-COAXIAL-RT ANGLE | 1 | |
| | AMP-31889 | TERMINAL | 1 | |
| | AMP-31902 | TERMINAL | 1 | |
| - 58 | | CABLE ASSY-OMNIGATOR TO OMNI TEE | NP | |
| | RG-58A/U | COAXIAL CABLE-BULK ITEM 33 IN LONG | AR | |
| | 13B | * PLUG-MOTOROLA TYPE | 2 | |
| - 59 | UG-88C/U | PLUG-COAXIAL | 2 | |
| - 60 | | CABLE ASSY-OMNI TEE TO OMNI ANTENNA-----REPLACES ITEM 41 | NP | |
| | RG-58A/U | COAXIAL CABLE-BULK ITEM | AR | |
| - 61 | UG-89/U | * RECEPTACLE-COAXIAL | 1 | |
| - 62 | UG-88C/U | * PLUG-COAXIAL | 1 | |
| - 63 | | CABLE ASSY-OMNIGATOR TO POWER SUPPLY | NP | |
| | 86-PM11 | * PLUG 11 PIN | 1 | |
| | 86-PF11 | * RECEPTACLE 11 PIN | 1 | |
| - 64 | | TRANSMITTER SELECTOR SWITCH SEE FIGURE 9-1 | 1 | |
| | | RADIO COOLING SEE FIGURE 10-1 | 1 | |
| - 65 | UG-274/U | TEE CONNECTOR-COAXIAL | 1 | |

* ITEMS MARKED WITH ASTERISK SUPPLIED WHEN COMPLETE RADIO IS PURCHASED

NARCO MARK IV SUPERHOMER RADIO INSTALLATION

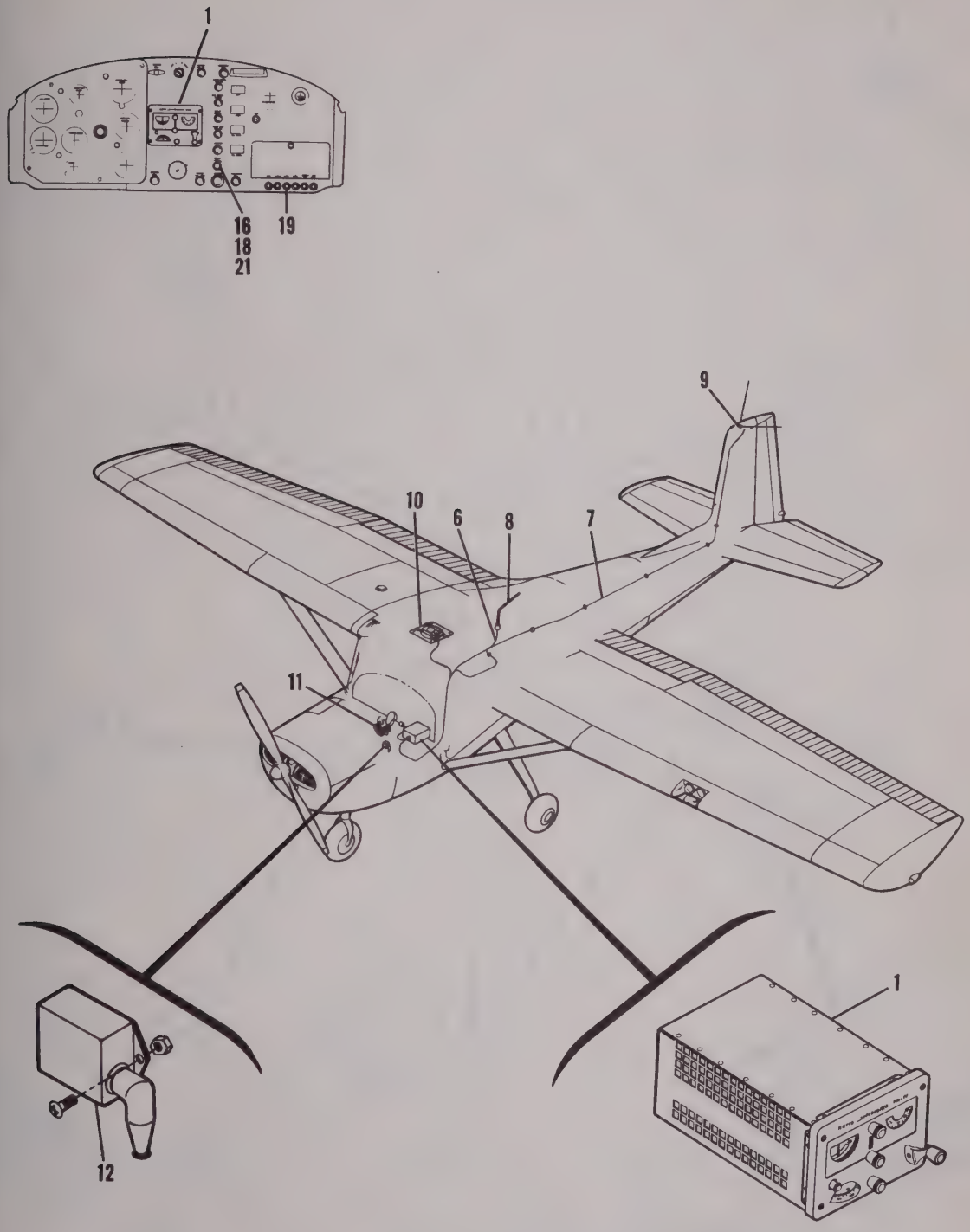


## 150 SERIAL 15059711 THRU 15061532

Figure 5-2. Narco Mark IV Superhomer Radio Installation (Sheet 1 of 3)

NARCO MARK IV SUPERHOMER RADIO INSTALLATION

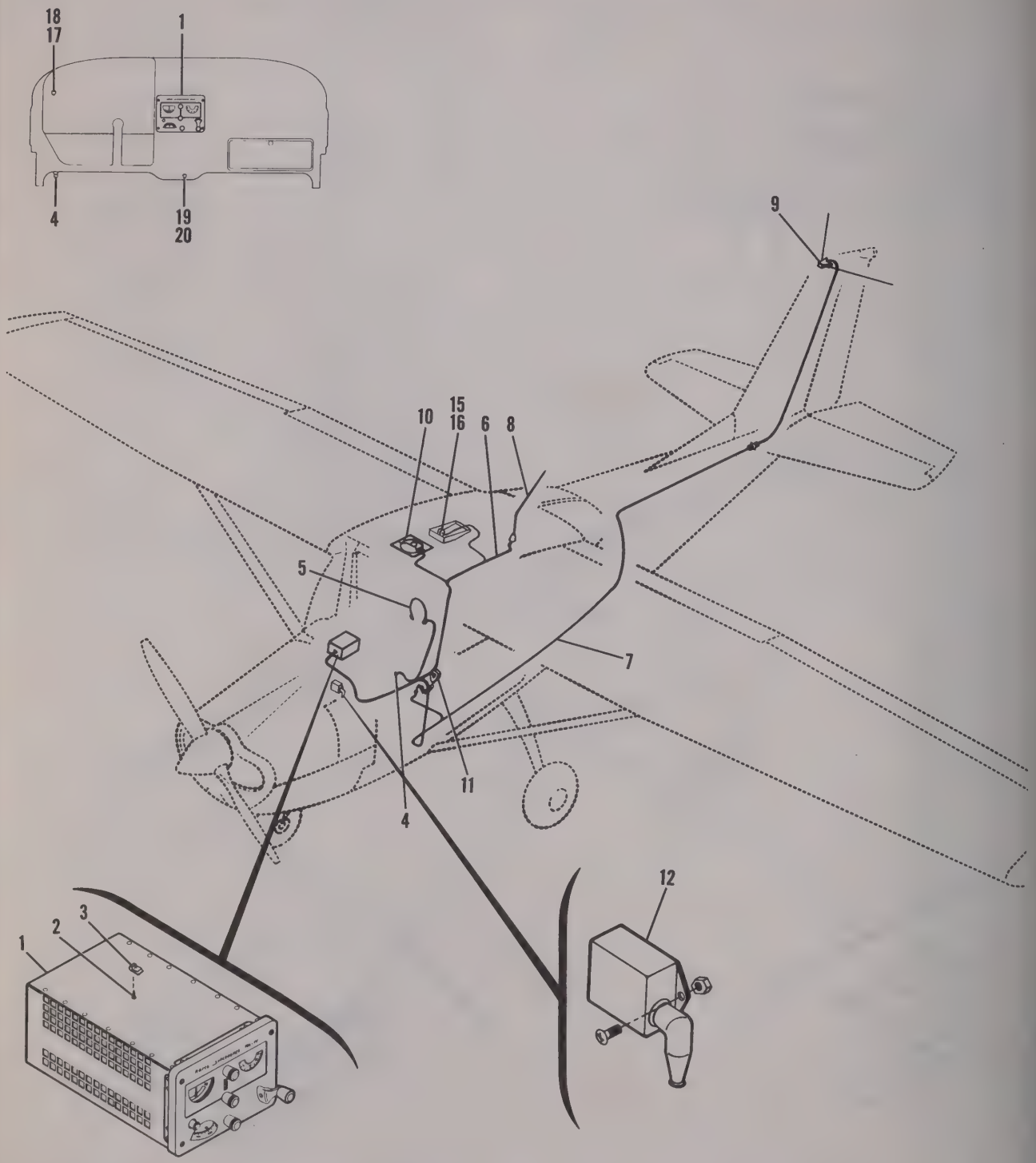


**172 SERIAL 17249545 THRU 17253392**
**P172 SERIAL P17257120 THRU P17257188**

Figure 5-2. Narco Mark IV Superhomer Radio Installation (Sheet 2 of 3)

NARCO MARK IV SUPERHOMER RADIO INSTALLATION

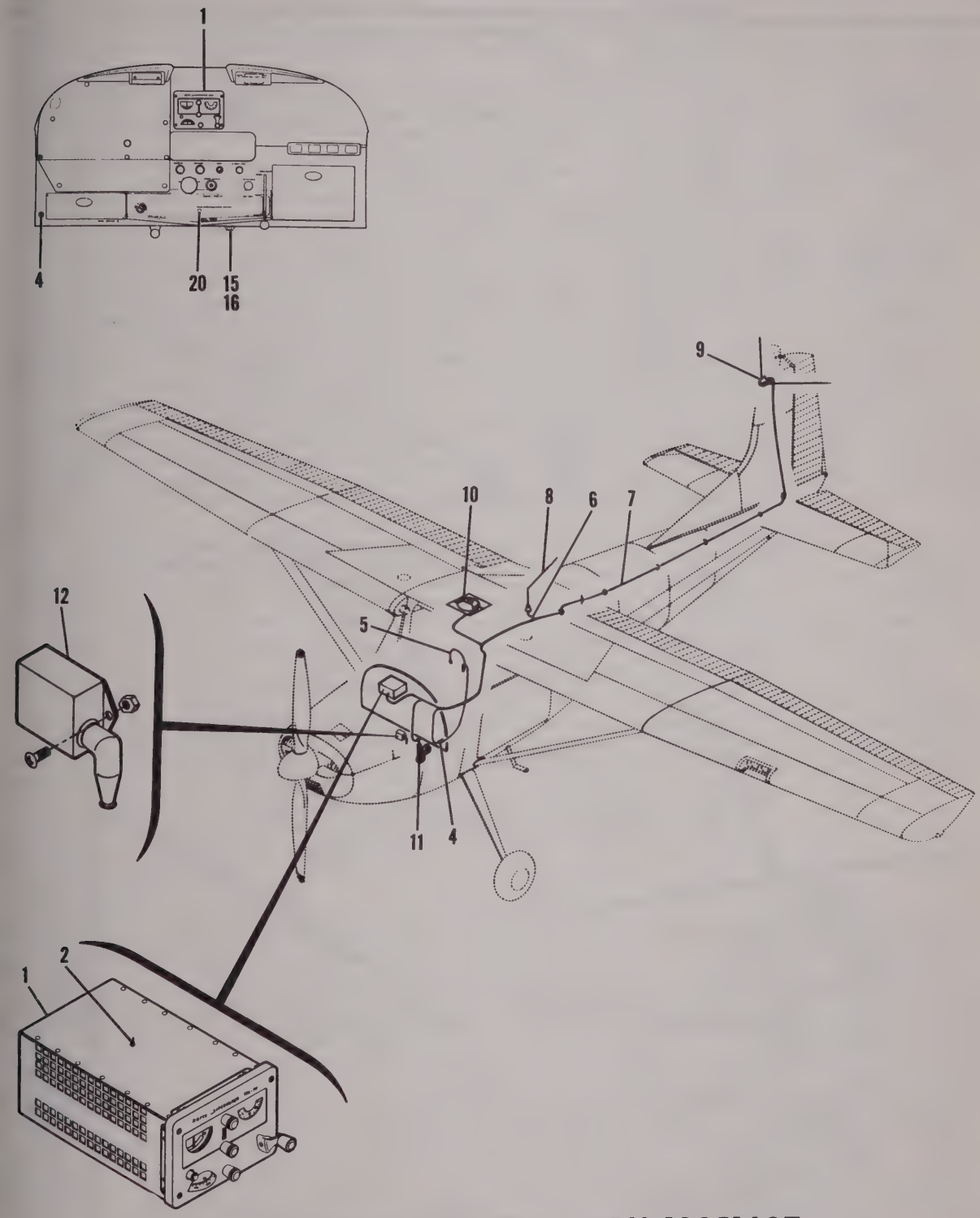


**180 SERIAL 18051184 THRU 18051607**
**185 SERIAL 185-0498 THRU 185-0967**

Figure 5-2. Narco Mark IV Superhomer Radio Installation (Sheet 3 of 3)

| FIGURE AND INDEX NO. | PART NUMBER | DESCRIPTION<br>1 2 3 4 5 6 7 | UNITS PER ASSY | USABLE ON CODE |
|---|---|---|---|---|
| 5-2- | | RADIO INSTALLATION-NARCO MARK IV SUPERHOMER---------- | NP | |
| - 1 | MARK IV | * SUPERHOMER VHT-4---------- | 1 | |
| | | ATTACHING PARTS | | |
| | S1021Z6-6 | SCREW---------- | 4 | |
| | NAS446-2-3 | NUT ---------- | 4 | |
| - 2 | S1021Z8-6 | SCREW USED ON ALL MODELS EXCEPT 150 & 1964 172 MODELS- | 1 | |
| - 3 | NAS395-18-3 | NUT 172 & &172 THRU 1963 ONLY---------- | 1 | |
| | | ---*--- | | |
| - 4 | S1103-1 | PHONE JACK ALL MODELS EXCEPT 150---------- | 1 | |
| - 5 | 0770039-1 | HEADSET ASSY ALL MODELS EXCEPT 150---------- | 1 | |
| - 6 | | * CABLE ASSY-VHF XMITTING ANT CABLE---------- | NP | |
| | RG-58A/U | * CABLE-COAXIAL-BULK ITEM---------- | AR | |
| | 13A | PLUG-RCA PHONO TYPE---------- | 1 | |
| | S1367-2-8 | * TERMINAL---------- | 1 | |
| | S1367-1-10 | * TERMINAL---------- | 1 | |
| - 7 | | CABLE ASSY-OMNI ANT---------- | NP | |
| | RG-58A/U | * CABLE-COAXIAL-BULK ITEM---------- | AR | |
| | 13B | * PLUG-MOTOROLA TYPE---------- | 1 | |
| | UG-88C/U | PLUG-COAXIAL 180 AND 185 ONLY---------- | 1 | |
| | UG-291/U | RECEPTACLE-COAXIAL 150, 172 & P172 ONLY---------- | 1 | |
| | | * CABLE ASSY-AUDIO---------- | NP | |
| | 91-MPF6S | * RECEPTACLE 6 PIN---------- | 1 | |
| - 8 | | VHF ANTENNA INSTALLATION SEE FIGURE 8-1---------- | 1 | |
| - 9 | | OMNI ANTENNA INSTALLATION SEE FIGURE 8-2---------- | 1 | |
| - 10 | | SPEAKER INSTALLATION SEE FIGURE 9-3---------- | 1 | |
| - 11 | | MICROPHONE INSTALLATION SEE FIGURE 9-4---------- | 1 | |
| - 12 | | RADIO FILTER INSTALLATION SEE FIGURE 10-5---------- | A/R | |
| | | RADIO COOLING SEE FIGURE 10-1---------- | 1 | |
| - 13 | | NOT USED | | |
| - 14 | | NOT USED | | |
| - 15 | 0413126-5 | RHEOSTAT ALL 180 AND 185 MODELS AND 172 1964 AND ON--- | 1 | |
| - 16 | 0413126-3 | KNOB ALL 180 AND 185 MODELS AND 150 AND 172 1964 AND ON | 1 | |
| - 17 | 0413126-9 | RHEOSTAT 172 AND P172 THRU 1963 ONLY---------- | 1 | |
| - 18 | 1450 | KNOB 150, 172 AND P172 THRU 1963 ONLY---------- | 1 | |
| - 19 | S1090-3 | FUSE HOLDER ASSY ALL 150 MODELS AND 172 AND P172------ | 1 | |
| | | THRU 1963 ONLY | | |
| | S1090-12 | CAP-10A ALL 150 MODELS AND 172 AND P172---------- | 1 | |
| | | THRU 1963 ONLY | | |
| | S1090-10 | FUSE-10A ALL 150 MODELS AND 172 AND P172---------- | 1 | |
| | | THRU 1963 | | |
| - 20 | PSM-10N | CIRCUIT BREAKER 180 AND 185 THRU 1963 ONLY---------- | 1 | |
| | S1360-5 | CIRCUIT BREAKER ALL MODELS EXCEPT 150 1964 AND ON----- | 1 | |
| - 21 | 0413126-7 | RHEOSTAT 150 ONLY---------- | 1 | |
| | | * ITEMS MARKED WITH ASTERISK SUPPLIED WHEN COMPLETE RADIO IS PURCHASED | | |

NARCO MARK V RADIO INSTALLATION

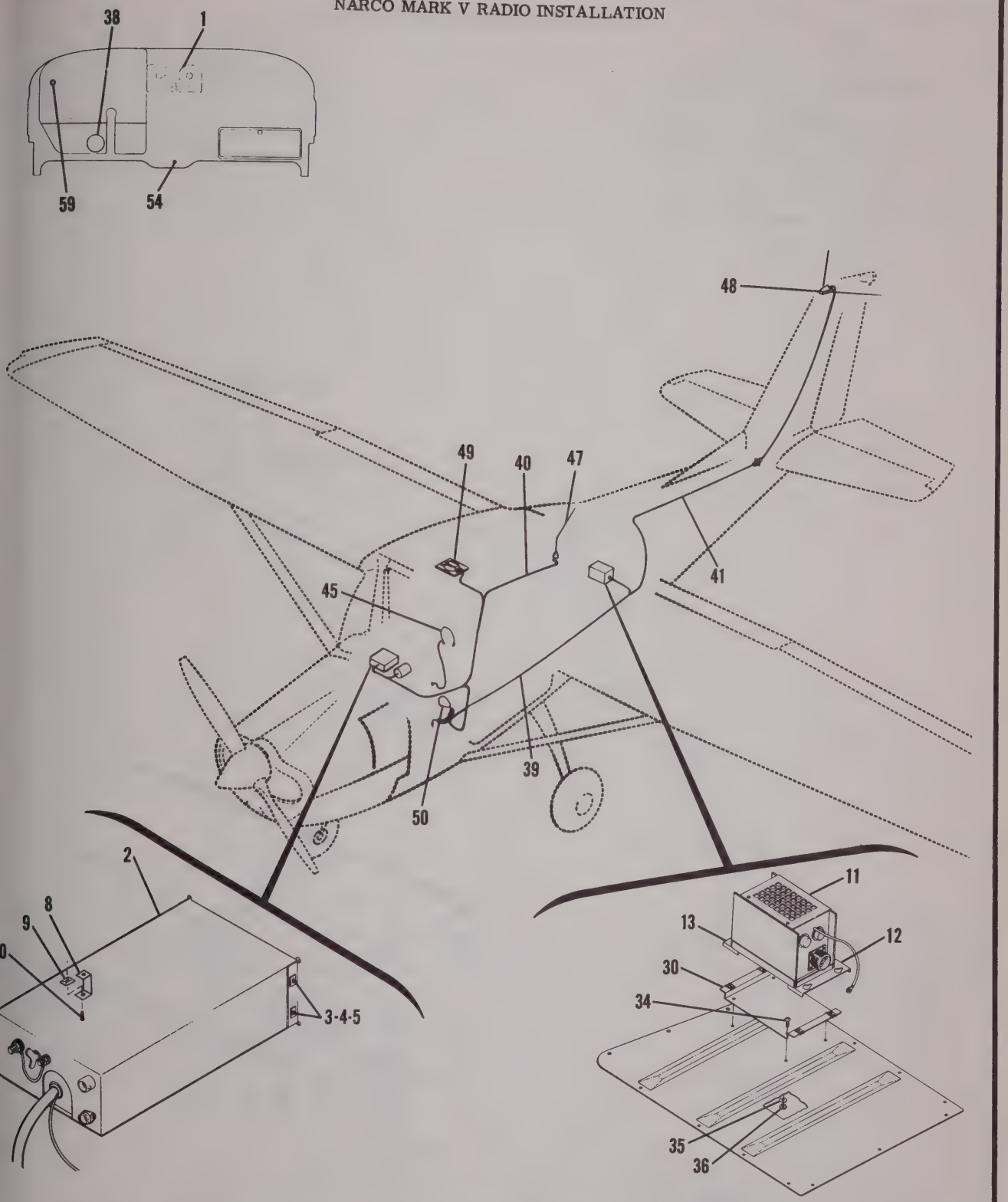


**172 SERIAL 17249545 THRU 17250572**
**P172 SERIAL P17257120 THRU P17257188**

Figure 5-3. Narco Mark V Radio Installation (Sheet 1 of 6)

NARCO MARK V RADIO INSTALLATION

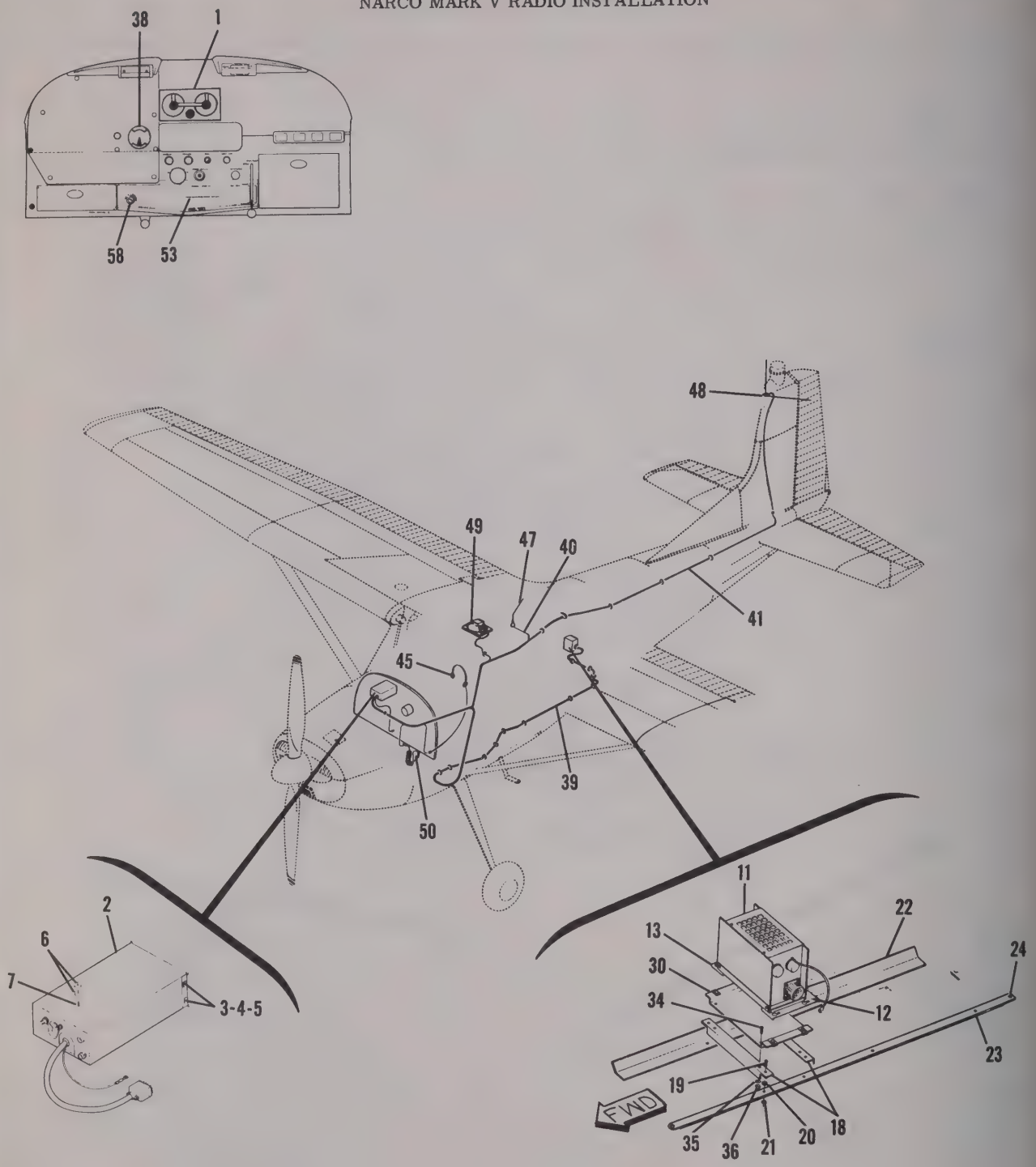


## 180 SERIAL 18051184 THRU 18051312
## 185 SERIAL 185-0498 THRU 185-0653

Figure 5-3. Narco Mark V Radio Installation (Sheet 2 of 6)

NARCO MARK V RADIO INSTALLATION

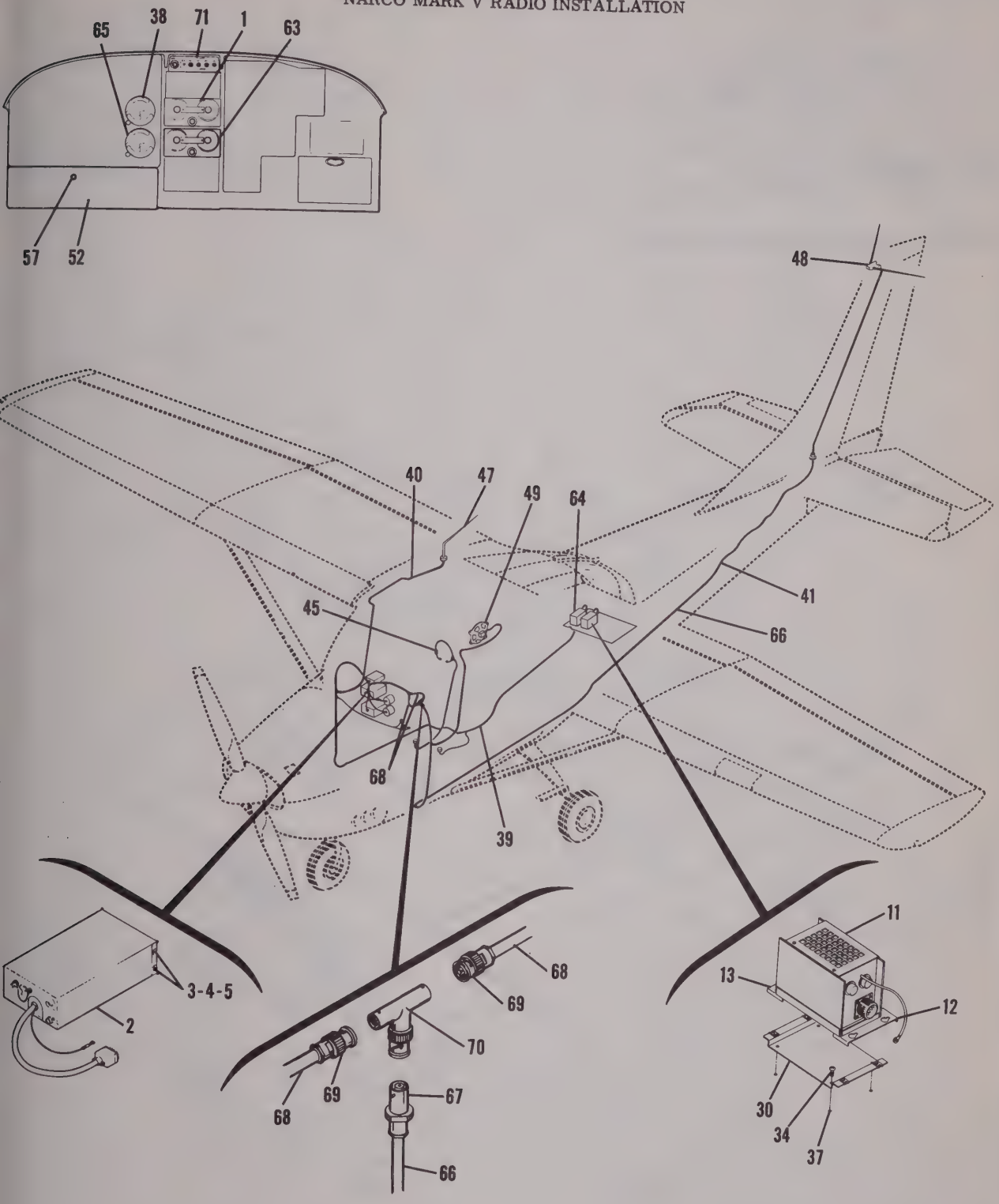


## 182 SERIAL 18254347 THRU 18255058

Figure 5-3. Narco Mark V Radio Installation (Sheet 3 of 6)

NARCO MARK V RADIO INSTALLATION

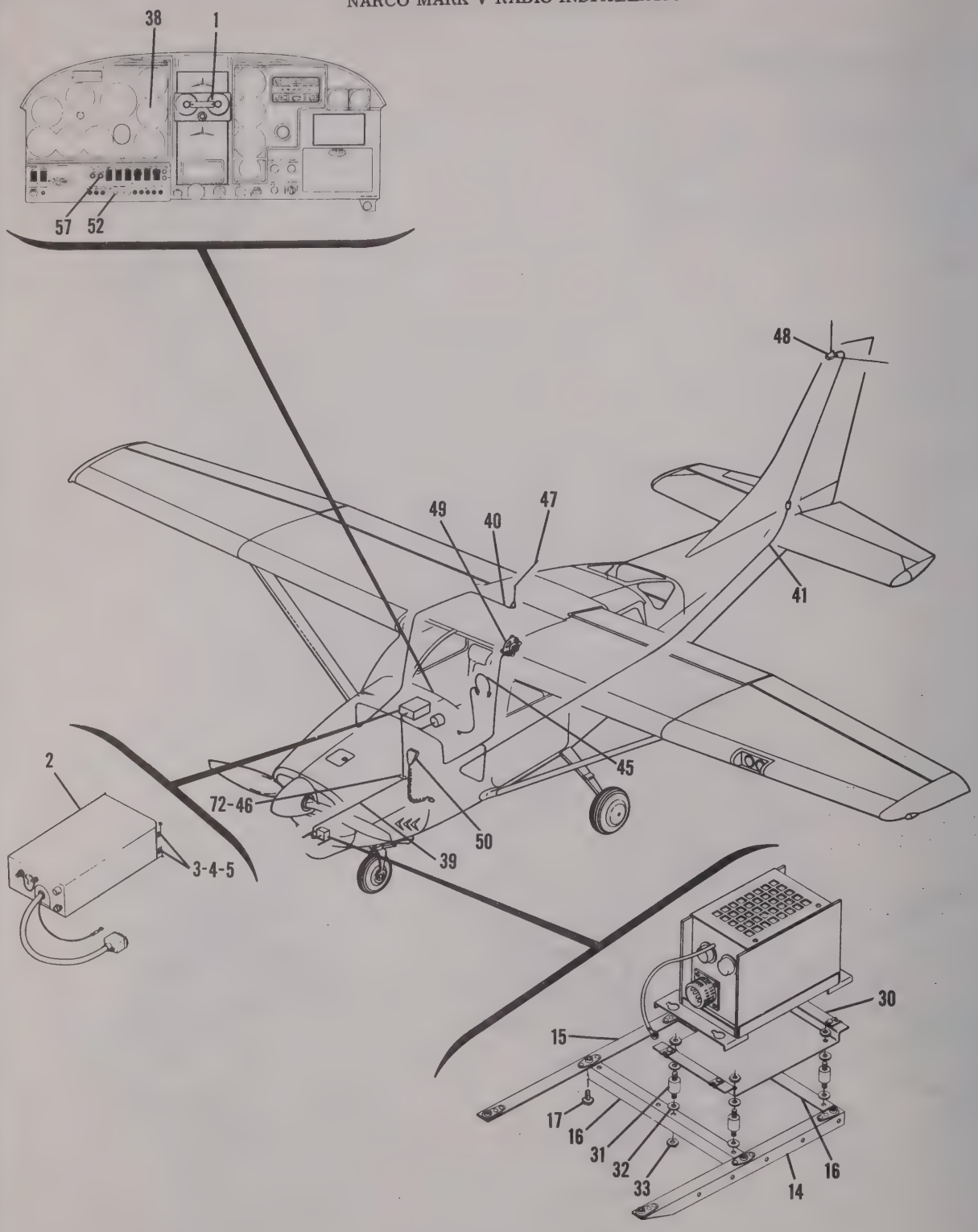


## 205 SERIAL 205-0001 THRU 205-0480

Figure 5-3. Narco Mark V Radio Installation (Sheet 4 of 6)

NARCO MARK V RADIO INSTALLATION

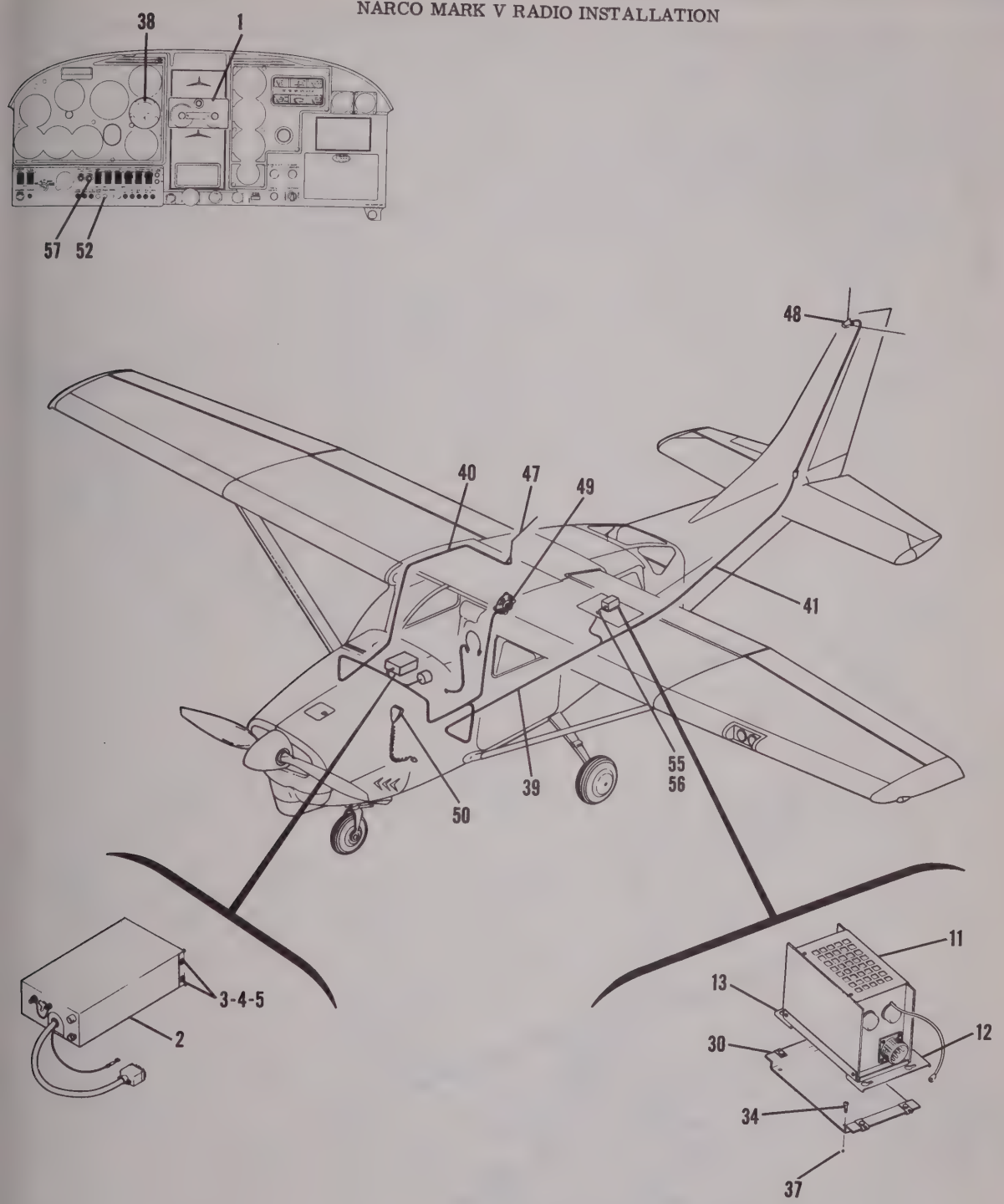


## 210 SERIAL 21058111 THRU 21058220

Figure 5-3. Narco Mark V Radio Installation (Sheet 5 of 6)

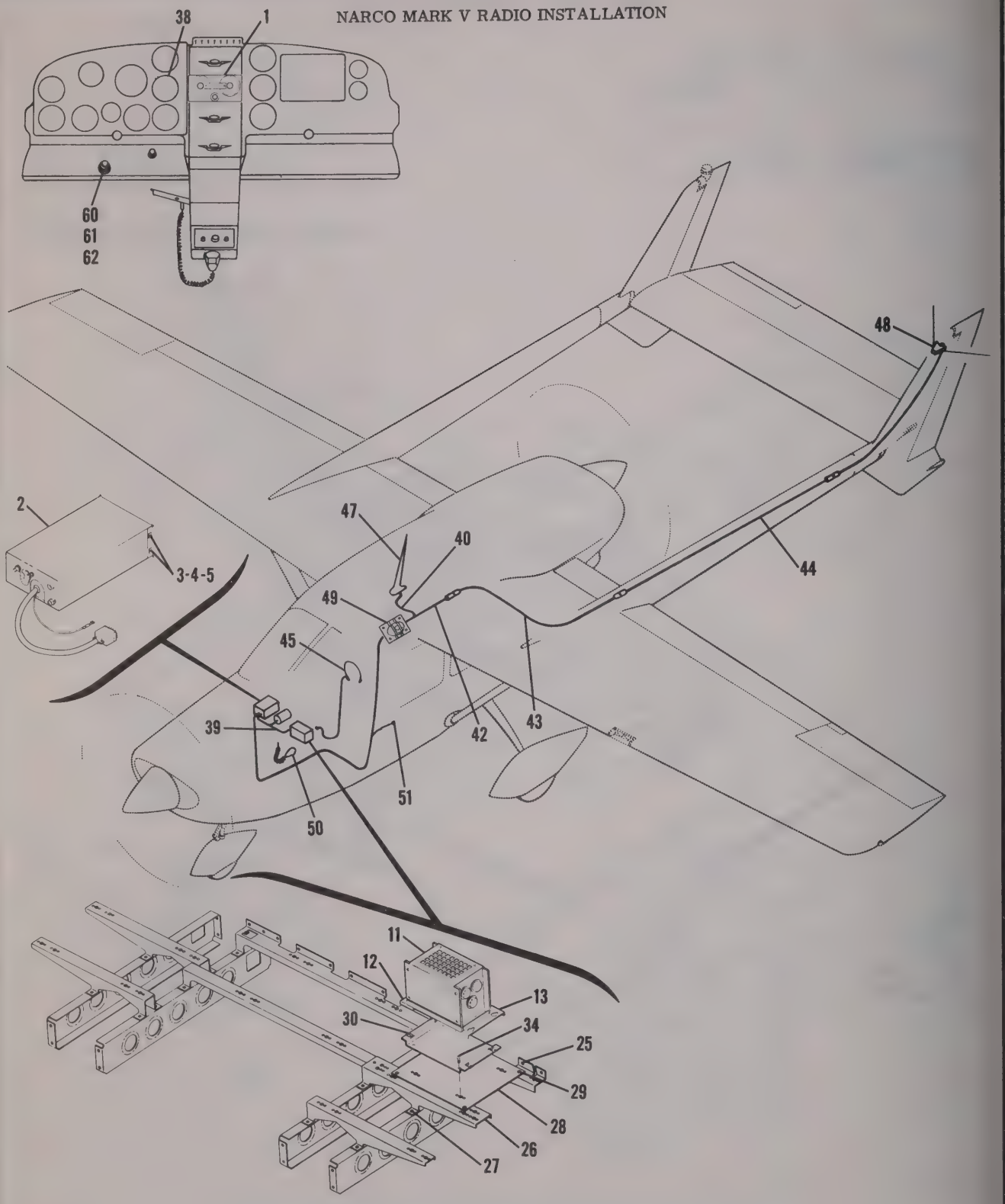


## 336 SERIAL 336-0001 THRU 336-0195

Figure 5-3. Narco Mark V Radio Installation (Sheet 6 of 6)

| FIGURE AND INDEX NO. | PART NUMBER | DESCRIPTION<br>1 2 3 4 5 6 7 | UNITS PER ASSY | USABLE ON CODE |
|---|---|---|---|---|
| 5-3- | | RADIO INSTALLATION-NARCO MARK V WITH VOA-4 OR VOA-5--------- | NP | |
| - 1 | MARK V | * RECEIVER-TRANSMITTER UNIT-NARCO MARK V CHASSIS---------- | 1 | |
| - 2 | 0770034-2 | * DUST COVER---------- | 1 | |
| | | ATTACHING PARTS | | |
| - 3 | S1021Z6-6 | SCREW---------- | 4 | |
| - 4 | AN960-6 | WASHER---------- | 4 | |
| - 5 | NAS446-2-3 | NUT ---------- | 4 | |
| - 6 | S355-2 | SPACER 180 & 185 ONLY---------- | 2 | |
| - 7 | S1021Z6-12 | SCREW 180 & 185 ONLY---------- | 1 | |
| - 8 | 0570004-1 | STRAP-SUPPORT 172 & P172 ONLY---------- | 1 | |
| - 9 | NAS395-18-3 | NUT 172 & P172 ONLY---------- | 1 | |
| - 10 | S1021Z8-6 | SCREW 172 & P172 ONLY---------- | 1 | |
| | | ---*--- | | |
| - 11 | T12MP-7 | * MODULATOR-POWER UNIT 14 VOLT SYSTEM---------- | 1 | |
| | | ALL MODELS EXCEPT 336 | | |
| | T24MP-8 | * MODULATOR-POWER UNIT 28 VOLT SYSTEM 336 ONLY------ | 1 | |
| - 12 | 0770034-11 | MOUNTING BRACKET---------- | 1 | |
| | | ATTACHING PARTS | | |
| | AN515-8R8 | SCREW---------- | 2 | |
| | MS20365-832C | NUT ---------- | 2 | |
| | | ---*--- | | |
| - 13 | 0770034-12 | MOUNTING BRACKET---------- | 1 | |
| | | ATTACHING PARTS | | |
| | AN515-8R8 | SCREW---------- | 2 | |
| | MS20365-832C | NUT ---------- | 2 | |
| | | ---*--- | | |
| - 14 | 1270627-5 | SIDE ANGLE ASSY L.H. 205 ONLY---------- | 1 | |
| | 1270627-7 | SIDE ANGLE L.H.---------- | 1 | |
| | NAS697A3 | NUTPLATE---------- | 1 | |
| | NAS696A3 | NUTPLATE---------- | 2 | |
| - 15 | 1270627-6 | SIDE ANGLE ASSY R.H. 205 ONLY---------- | 1 | |
| | 1270627-8 | SIDE ANGLE ASSEMBLY R.H.---------- | 1 | |
| | NAS697A3 | NUTPLATE---------- | 1 | |
| | NAS696A3 | NUTPLATE---------- | 2 | |
| - 16 | 1270627-56 | ATTACH ANGLE---------- | 2 | |
| | | ATTACHING PARTS | | |
| - 17 | AN520-10R6 | SCREW ALTERNATE IS AN3-3A BOLT-TO BE USED WHEN-------- | 4 | |
| | | INSTALLATION CLEARANCE IS LIMITED 205 ONLY | | |
| | | ---*--- | | |
| - 18 | 0511030-7 | ANGLE-MOUNTING 180 & 185 ONLY---------- | 2 | |
| | | ATTACHING PARTS | | |
| - 19 | AN515-8R10 | SCREW---------- | 4 | |
| - 20 | S355-2 | SPACER---------- | 4 | |
| - 21 | MS20365-832C | NUT ---------- | 4 | |
| | | ---*--- | | |
| - 22 | 0770048-1 | ANGLE INSTALLED ON PRODUCTION AIRCRAFT AS STANDARD---- | 1 | |
| | | EQUIPMENT 180 & 185 ONLY | | |
| - 23 | 0770049-1 | ANGLE 180 & 185 ONLY---------- | 1 | |
| | | ATTACHING PARTS | | |
| - 24 | AN515-8R10 | SCREW---------- | 2 | |
| | S355-2 | SPACER---------- | 2 | |
| | MS20365-832C | NUT ---------- | 2 | |
| | | ---*--- | | |
| - 25 | 1470056-1 | SUPPORT ASSY REPLACES 1413501-18 ON RIGHT SIDE OF SHIP---- | 1 | |
| | | 336 ONLY | | |
| | 1470056-5 | SUPPORT---------- | 1 | |
| | NAS686A3 | NUTPLATE---------- | 1 | |
| | NAS687A08 | NUTPLATE---------- | 1 | |
| | | ATTACHING PARTS | | |
| | AN515-8R6 | SCREW---------- | 2 | |
| | AN960-8 | WASHER---------- | 2 | |
| | MS20365-832C | NUT ---------- | 2 | |
| | | ---*--- | | |

CONTINUED ON NEXT PAGE

| FIGURE AND INDEX NO. | PART NUMBER | DESCRIPTION 1 2 3 4 5 6 7 | UNITS PER ASSY | USABLE ON CODE |
|---|---|---|---|---|
| 5-3- 26 | 1470056-4 | SUPPORT ASSY 336 ONLY | 1 | |
| | 1470056-5 | SUPPORT | 1 | |
| | NAS686A3 | NUTPLATE | 6 | |
| | NAS687A08 | NUTPLATE | 2 | |
| | | ATTACHING PARTS | | |
| - 27 | AN515-8R6 | SCREW | 4 | |
| | AN960-8 | WASHER | 4 | |
| | MS20365-832C | NUT | 4 | |
| | | ---*--- | | |
| - 28 | 1470056-16 | SUPPORT ASSY 336 ONLY | 1 | |
| | 1470056-15 | SUPPORT | 1 | |
| | NAS686A3 | NUTPLATE | 4 | |
| | | ATTACHING PARTS | | |
| - 29 | AN515-8R8 | SCREW | 4 | |
| | | ---*--- | | |
| - 30 | 0770034-3 | MOUNTING PLATE | 1 | |
| | | ATTACHING PARTS | | |
| - 31 | 0411059-3 | SHOCKMOUNT 205 ONLY | 4 | |
| - 32 | AN936A8 | WASHER 205 ONLY | 8 | |
| - 33 | AN340B8 | NUT 205 ONLY | 8 | |
| - 34 | AN515-8R16 | SCREW ALL MODELS EXCEPT 205 | 4 | |
| - 35 | AN936A8 | WASHER 172, P172, 180 & 185 ONLY | 4 | |
| - 36 | MS20365-832C | NUT 172, P172, 180 & 185 ONLY | 4 | |
| - 37 | A8K75 | RIVNUT 182 & 210 ONLY | 4 | |
| | | ---*--- | | |
| - 38 | VOA-4 | * CONVERTER-INDICATOR ASSEMBLY NOT USED WHEN VOA-5 IS USED | 1 | |
| | VOA-5 | * CONVERTER-INDICATOR ASSEMBLY NOT USED WHEN VOA-4 IS USED | 1 | |
| - 39 | | CABLE ASSY-TRANSCEIVER TO POWER SUPPLY & CONVERTER-INDICATOR | NP | |
| | 41240-101 | * RECEPTACLE & HOOD ASSY CONNECTS TO RECEIVER END | 1 | |
| | MS3106A-20-29S | * PLUG CONNECTS TO POWER UNIT | 1 | |
| | 41223-2 | PLUG CONNECTS TO INDICATOR END | 1 | |
| | MS3057-12A | * CLAMP ONE REQD ON INDICATOR END AND ONE REQD ON POWER UNIT END | 2 | |
| - 40 | | CABLE ASSY-TRANSCEIVER TO VHF ANTENNA | NP | |
| | RG-58A/U | COAXIAL CABLE-BULK ITEM | AR | |
| | 13B | PLUG-MOTOROLA TYPE | 1 | |
| | UG-88C/U | PLUG-COAXIAL | 1 | |
| - 41 | | CABLE ASSY-TRANSCEIVER TO OMNI ANTENNA ALL MODELS EXCEPT 336 | NP | |
| | RG-58A/U | COAXIAL CABLE-BULK ITEM | AR | |
| | 13B | PLUG-MOTOROLA TYPE TRANSCEIVER END | 1 | |
| | UG-88C/U | PLUG-COAXIAL ALL MODELS EXCEPT 172 & P172 | 1 | |
| | UG-291/U | RECEPTACLE-COAXIAL 172 & P172 ONLY | 1 | |
| | | ATTACHING PARTS | | |
| | AN520-3R4 | SCREW | 4 | |
| | | ---*--- | | |
| - 42 | | CABLE ASSY-TRANSCEIVER TO OMNI CABLE CONNECTION AT WING ROOT 336 ONLY | NP | |
| | RG-58A/U | COAXIAL CABLE-BULK ITEM | AR | |
| | UG-88C/U | PLUG-COAXIAL | 1 | |
| | 13B | PLUG-MOTOROLA TYPE | 1 | |
| - 43 | | CABLE ASSY-WING ROOT TO BOOM CONNECTION-SUPPLIED ON AIRCRAFT AS STANDARD EQUIPMENT 336 ONLY | REF | |
| | RG-58A/U | COAXIAL CABLE-BULK ITEM | AR | |
| | UG-88C/U | PLUG-COAXIAL | 1 | |
| | UG-89/U | JACK-COAXIAL | 1 | |
| - 44 | | CABLE ASSY-BOOM CONNECTION TO BALUN STUB 336 ONLY | NP | |
| | RG-58A/U | COAXIAL CABLE-BULK ITEM | AR | |
| | UG-89/U | JACK-COAXIAL | 1 | |
| | UG-88C/U | PLUG-COAXIAL | 1 | |
| - 45 | 0770039-1 | HEADSET | 1 | |
| - 46 | 1213614-5 | COVER PLATE 205 ONLY | 2 | |
| | NAS557-8A | GROMMET 205 ONLY | 1 | |
| - 47 | | VHF ANTENNA INSTALLATION SEE FIGURE 8-1 | 1 | |
| - 48 | | OMNI ANTENNA INSTALLATION SEE FIGURE 8-2 | 1 | |

CONTINUED ON NEXT PAGE

| FIGURE AND INDEX NO. | PART NUMBER | 1 2 3 4 5 6 7 DESCRIPTION | UNITS PER ASSY | USABLE ON CODE |
|---|---|---|---|---|
| 5-3- 49 | | SPEAKER INSTALLATION SEE FIGURE 9-3 | | |
| - 50 | | MICROPHONE INSTALLATION SEE FIGURE 9-4 | 1 | |
| | S1103-1 | PHONE JACK | 1 | |
| - 51 | S1360-5 | CIRCUIT BREAKER 336 ONLY | 1 | |
| - 52 | S1232-10 | CIRCUIT BREAKER 182, 205 & 210 ONLY | 1 | |
| - 53 | PSM-10N | CIRCUIT BREAKER 180 & 185 ONLY | 1 | |
| - 54 | S1090-3 | FUSE HOLDER ASSY 172 & P172 ONLY | 1 | |
| | S1090-12 | CAP-10A 172 & P172 ONLY | 1 | |
| | S1091-10 | FUSE-10A 172 & P172 ONLY | 1 | |
| - 55 | S1261-1 | COVER PLATE 210 ONLY | 1 | |
| - 56 | MS35489-S19 | GROMMET 210 ONLY | 2 | |
| | 0770622-1 | FILTER-MAGNETO 082 ONLY | 1 | |
| - 57 | R-12 1/2-75-RS34 | RHEOSTAT 182, 205 & 210 ONLY | 1 | |
| | S1163-2 | KNOB-RHEOSTAT 182, 205 & 210 ONLY | 1 | |
| - 58 | 0413126-5 | RHEOSTAT 180 & 185 ONLY | 1 | |
| | 0413126-3 | KNOB 180 & 185 ONLY | 1 | |
| - 59 | 0413126-9 | RHEOSTAT 172 & P172 ONLY | 1 | |
| | 1450 | KNOB 172 & P172 ONLY | 1 | |
| - 60 | | DROPPING RESISTOR-ENG INST LT DIM SEE 336 PARTS CATALOG | | |
| - 61 | X12871 | DROPPING RESISTOR-SW PANEL LT DIM SEE 336 PARTS CATALOG | | |
| - 62 | | DROPPING RESISTOR-FLT INST & RADIO DIAL LT OPT 336 ONLY SEE FIGURE 10-2 | 1 | |
| | 1470030-1 | KNOB 336 ONLY | 1 | |
| | 1470030-2 | KNOB 336 ONLY | 1 | |
| | 1470030-3 | KNOB 336 ONLY | 1 | |
| | 7751 | SPRING WASHER 336 ONLY | 1 | |
| | 7754 | SPRING WASHER 336 ONLY | 1 | |
| | 22653-718LR3 | SWITCH 336 ONLY | 1 | |
| | | DUAL RADIO INSTALLATION-THE FOLLOWING PARTS ARE REQUIRED IN ADDITION TO THOSE REQUIRED FOR A SINGLE RADIO INSTALLATION. ITEM 66 REPLACES ITEM 41 & ITEM 72 REPLACES ITEM 46. 182, 205 & 210 ONLY | | |
| - 63 | MARK V | * RECEIVER-TRANSMITTER UNIT-NARCO MARK V CHASSIS | 1 | |
| | 0770034-2 | * DUST COVER | 1 | |
| | | ATTACHING PARTS | | |
| | S1021Z6-6 | SCREW | 4 | |
| | AN960-6 | WASHER | 4 | |
| | NAS446-2-3 | NUT | 4 | |
| | | ---*--- | | |
| - 64 | T12MP-7 | * MODULATOR POWER UNIT 14 VOLT SYSTEM | 1 | |
| | | ALL MODELS EXCEPT 336 | | |
| | 0770034-11 | MOUNTING BRACKET | 1 | |
| | | ATTACHING PARTS | | |
| | AN515-8R8 | SCREW | 2 | |
| | MS20365-832C | NUT | 2 | |
| | | ---*--- | | |
| | 0770034-12 | MOUNTING BRACKET | 1 | |
| | | ATTACHING PARTS | | |
| | AN515-8R8 | SCREW | 2 | |
| | MS20365-832C | NUT | 2 | |
| | | ---*--- | | |
| | 0770034-3 | MOUNTING PLATE | 1 | |
| | | ATTACHING PARTS | | |
| | 0411059-3 | SHOCKMOUNT 205 ONLY | 4 | |
| | AN936A8 | WASHER 205 ONLY | 8 | |
| | AN340B8 | NUT 205 ONLY | 8 | |
| | AN515-8R16 | SCREW 182 & 210 ONLY | 4 | • |
| | A8K75 | RIVNUT 182 & 210 ONLY | 4 | |
| - 65 | VOA-4 | * CONVERTER-INDICATOR ASSEMBLY NOT USED WHEN VOA-5 IS USED | 1 | |
| | VOA-5 | * CONVERTER-INDICATOR ASSEMBLY NOT USED WHEN VOA-4 IS USED | 1 | |
| | | CABLE ASSY-TRANSCEIVER TO POWER SUPPLY & CONVERTER-INDICATOR | NP | |
| | 41240-101 | * RECEPTACLE & HOOD ASSY CONNECTS TO RECEIVER END | 1 | |
| | MS3106A-20-29S | * PLUG CONNECTS TO POWER UNIT | 1 | |
| | 41223-2 | PLUG CONNECTS TO INDICATOR END | 1 | |
| | MS3057-12A | * CLAMP ONE REQD ON INDICATOR END AND ONE REQD ON POWER UNIT END | 2 | |

CONTINUED ON NEXT PAGE

| FIGURE AND INDEX NO. | PART NUMBER | DESCRIPTION 1 2 3 4 5 6 7 | UNITS PER ASSY | USABL ON CODE |
|---|---|---|---|---|
| 5-3- 66 | | CABLE ASSY-TEE CONNECTOR TO OMNI ANTENNA---------- | NP | |
| | | REPLACES ITEM 41 | | |
| | RG-58A/U | COAXIAL CABLE-BULK ITEM---------- | AR | |
| | UG-88C/U | PLUG-COAXIAL CONNECTS TO BALUN STUB---------- | 1 | |
| - 67 | UG-89/U | JACK-COAXIAL CONNECTS TO TEE---------- | 1 | |
| - 68 | 0770033-33 | CABLE ASSY-TRANSCEIVER TO OMNI TEE---------- | NP | |
| | RG-58A/U | COAXIAL CABLE-BULK ITEM TWO 33 INCH CABLES REQD----- | AR | |
| - 69 | UG-88C/U | PLUG-COAXIAL---------- | 2 | |
| | 138 | PLUG-MOTOROLA TYPE---------- | 2 | |
| - 70 | UG-274/U | TEE CONNECTOR-COAXIAL---------- | 1 | |
| | S1232-10 | CIRCUIT BREAKER---------- | 1 | |
| - 71 | | TRANSMITTER SELECTOR SWITCH & AUDIO AMPLIFIER---------- | 1 | |
| | | SEE FIGURE 9-1 | | |
| | | RADIO COOLING INSTALLATION SEE FIGURE 10-1---------- | 1 | |
| - 72 | 1213614-6 | COVER PLATE REPLACES ITEM 46 205 ONLY---------- | 2 | |
| | NAS557-8A | GROMMET 205 ONLY---------- | 1 | |

* ITEMS MARKED WITH AN ASTERISK SUPPLIED WHEN COMPLETE RADIO IS PURCHASED

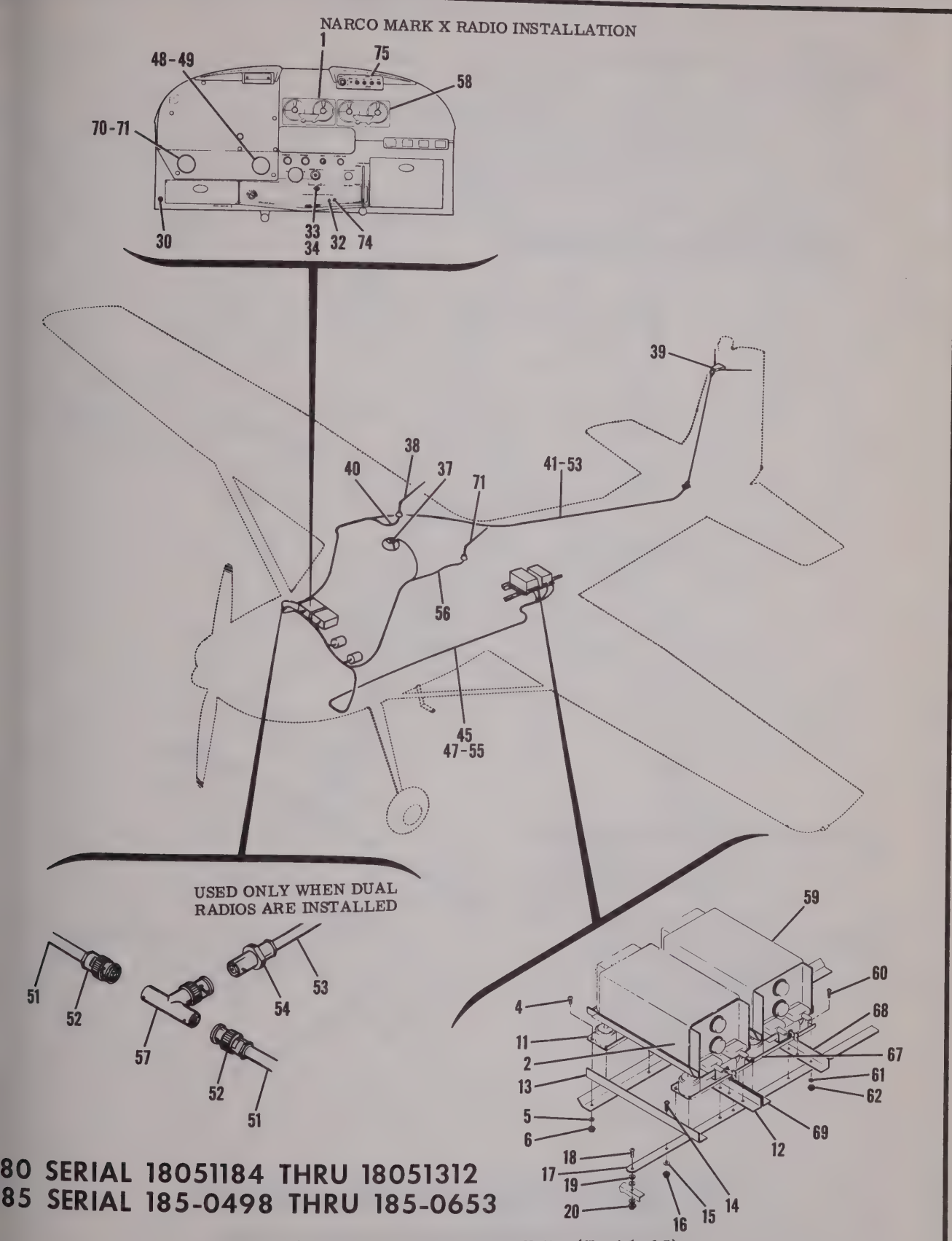


Figure 5-4. Narco Mark X Radio Installation (Sheet 1 of 5)

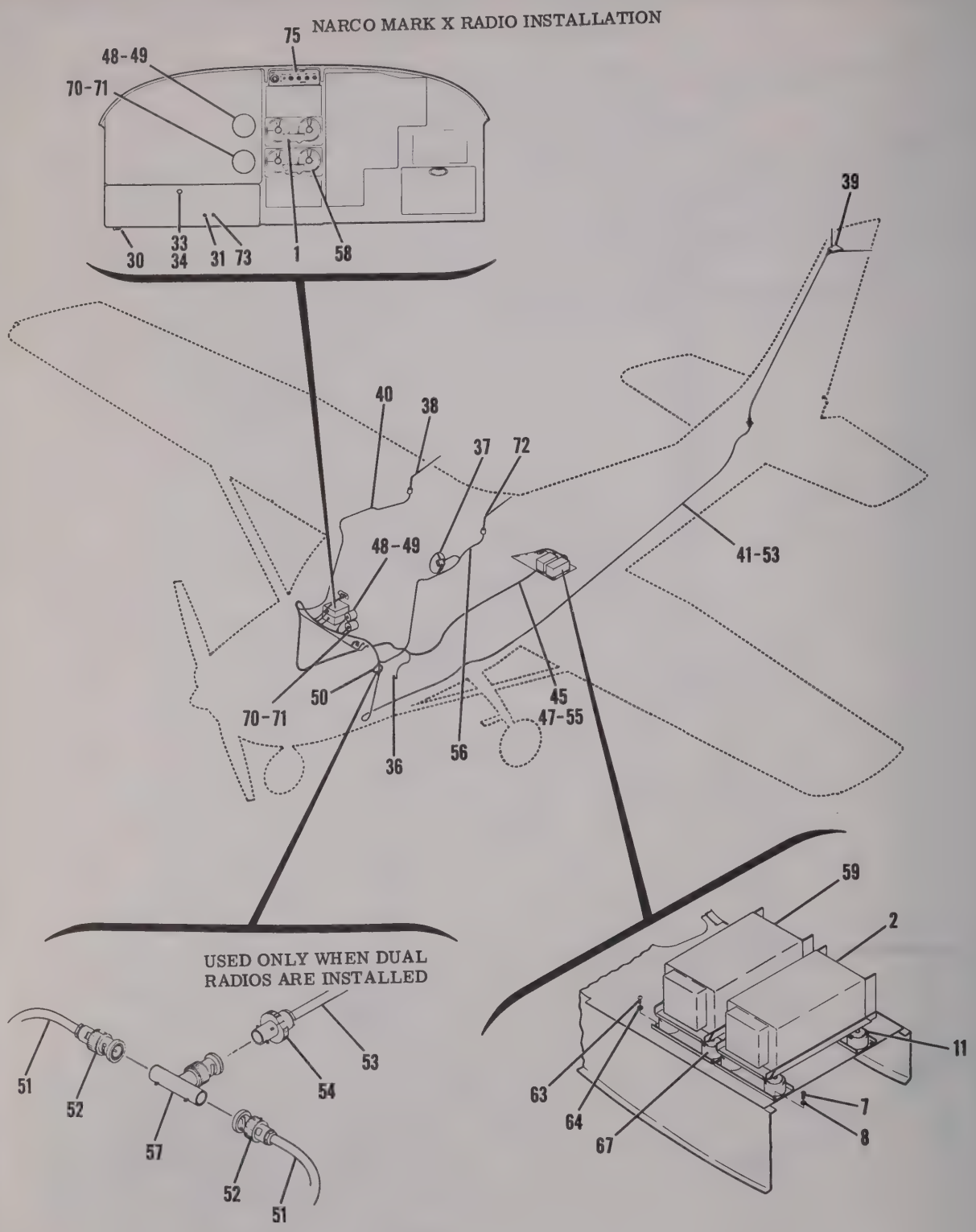


## 182 SERIAL 18254374 THRU 18255058

Figure 5-4. Narco Mark X Radio Installation (Sheet 2 of 5)

NARCO MARK X RADIO INSTALLATION

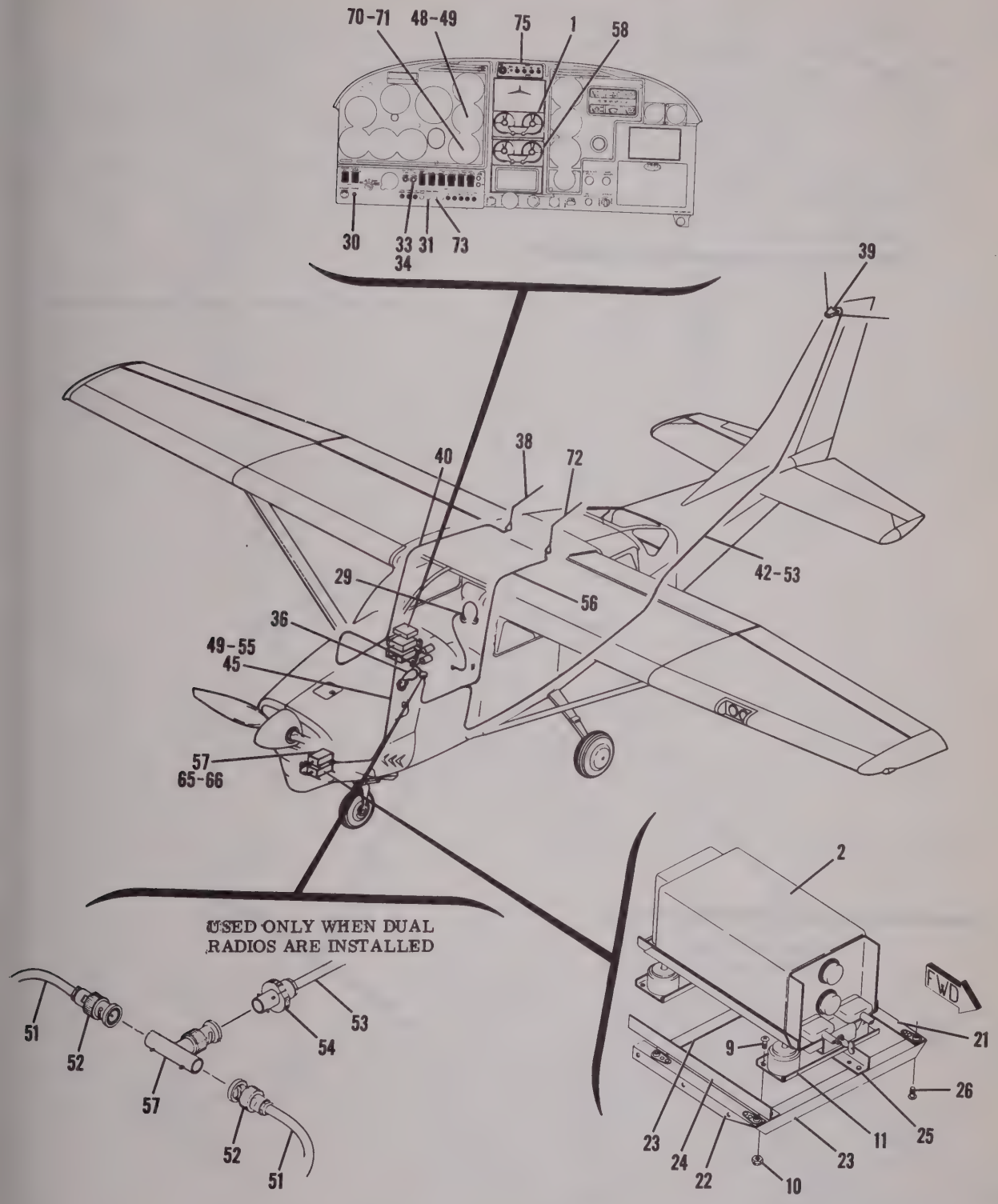


205 SERIAL 205-0001 THRU 205-0480

Figure 5-4. Narco Mark X Radio Installation (Sheet 3 of 5)

NARCO MARK X RADIO INSTALLATION

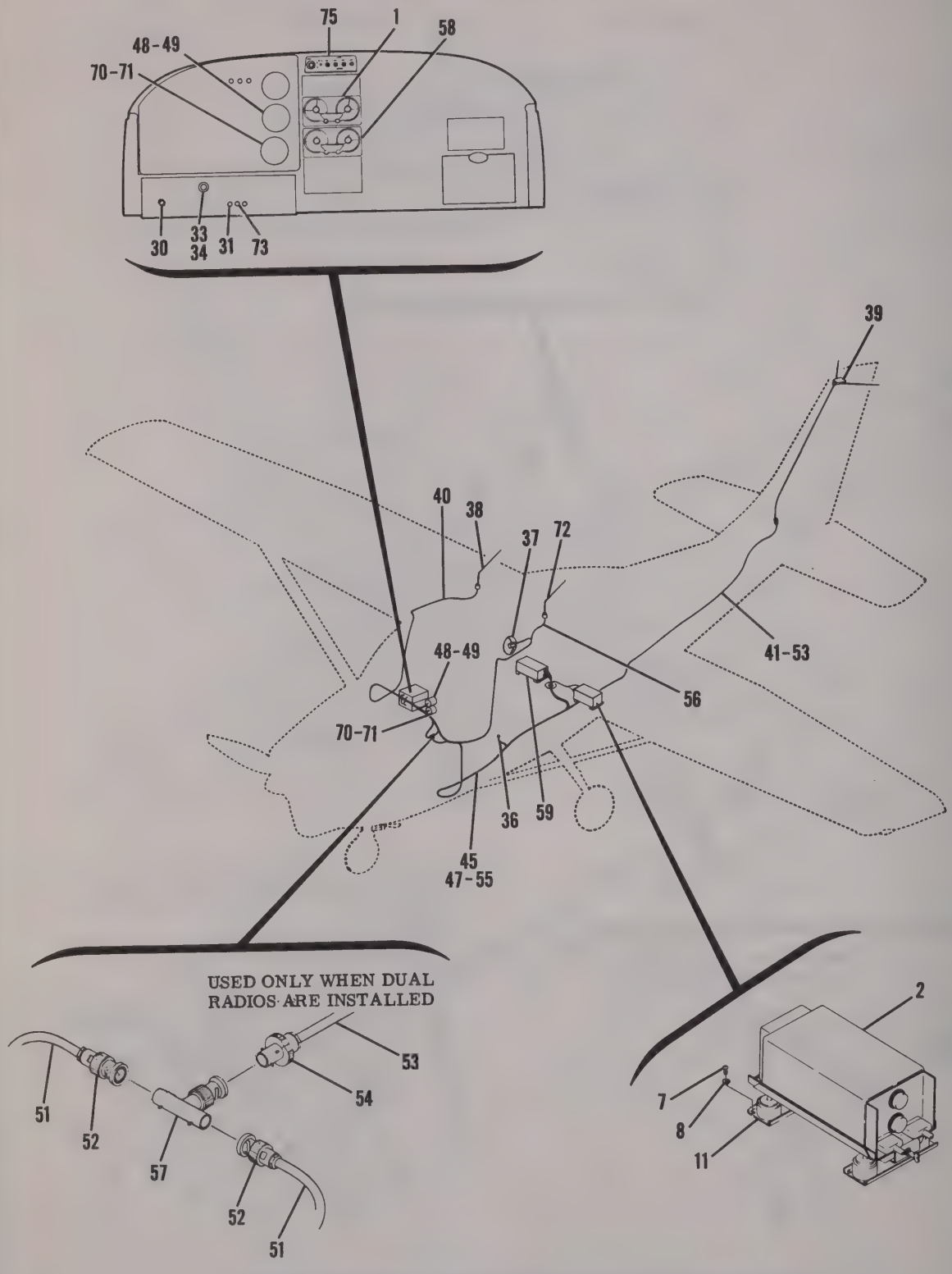


210 SERIAL 21058511 THRU 21058220

Figure 5-4. Narco Mark X Radio Installation (Sheet 4 of 5)

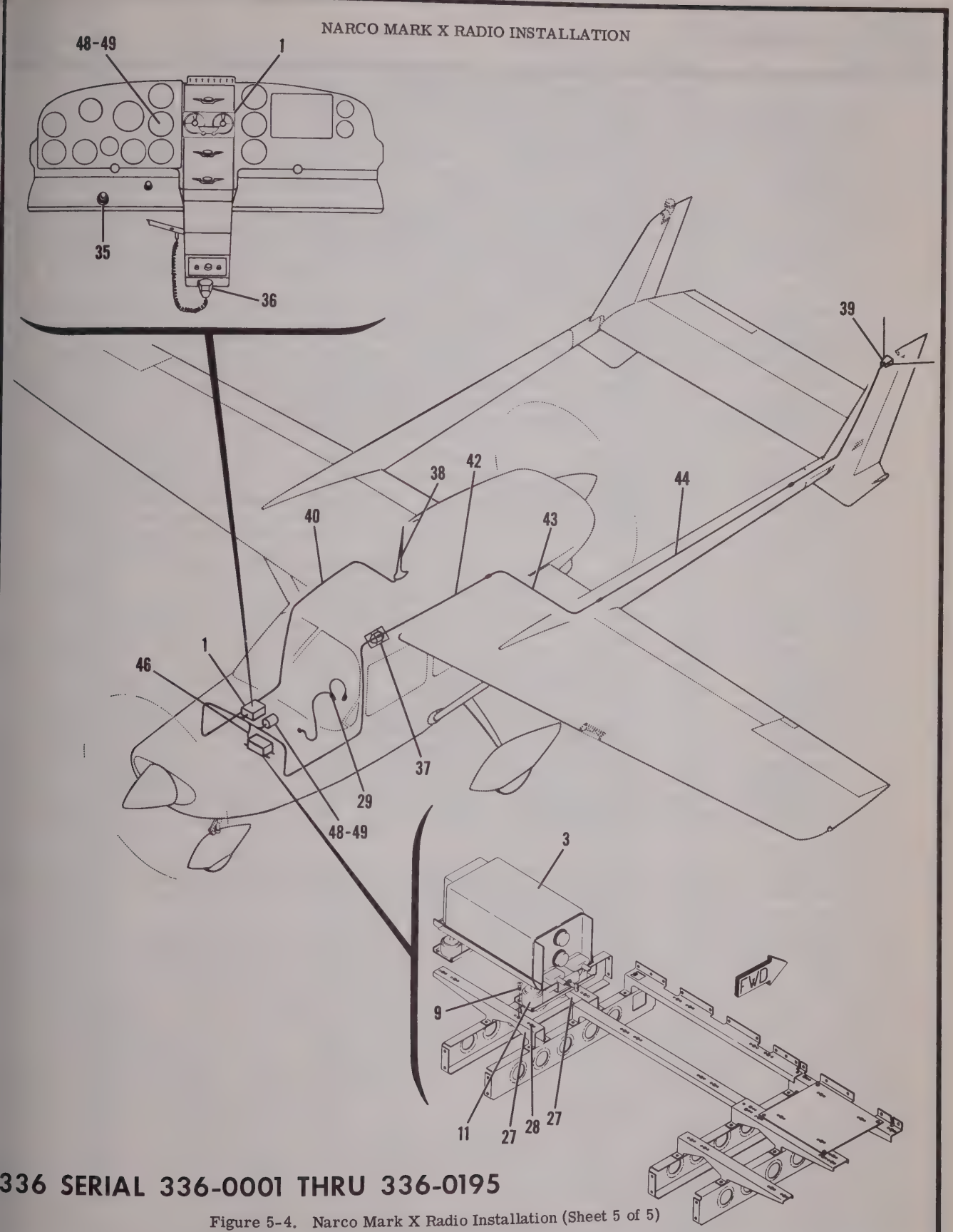


336 SERIAL 336-0001 THRU 336-0195

Figure 5-4. Narco Mark X Radio Installation (Sheet 5 of 5)

| FIGURE AND INDEX NO. | PART NUMBER | DESCRIPTION<br>1 2 3 4 5 6 7 | UNITS PER ASSY | USABLE ON CODE |
|---|---|---|---|---|
| 5-4- | | RADIO INSTALLATION-NARCO MARK X WITH VOA-4 OR VOA-5 | NP | |
| - 1 | MARK X | * TRANSCEIVER - USED ON DOMESTIC AIRCRAFT ONLY | A/R | |
| - 1 | MARK X-MODEL E | * TRANSCEIVER - USED ON EXPORT AIRCRAFT ONLY | A/R | |
| | M-REC3301-21A-GP-P | * RECEPTACLE | 1 | |
| | | ATTACHING PARTS | | |
| | S1021Z6-8 | SCREW | 4 | |
| | AN960-6L | WASHER-FLAT | 4 | |
| | NAS446-2-3 | NUT | 4 | |
| | | ---*--- | | |
| - 2 | T12MP-8 | * POWER UNIT-AUDIO ALL MODELS EXCEPT 336 | 1 | |
| - 3 | T24MP-8 | * POWER UNIT-AUDIO 336 ONLY | 1 | |
| | MRA20S-GH/VL | * PLUG ASSY-POWER CABLE | 1 | |
| | MI-18MHR-E | * PLUG-AUDIO CABLE | 1 | |
| | MRA-VL | * LEVER & PIVOT ASSY-AUDIO CABLE | 1 | |
| | | ATTACHING PARTS | | |
| - 4 | AN515-8R8 | SCREW 180 & 185 ONLY | 8 | |
| - 5 | AN960-8 | WASHER-FLAT 180 & 185 ONLY | 8 | |
| - 6 | MS20365-832C | NUT 180 & 185 ONLY | 8 | |
| - 7 | AN515-8R16 | SCREW 182 & 210 ONLY | 4 | |
| - 8 | AN936A8 | LOCKWASHER 182 & 210 ONLY | 4 | |
| | A8K75 | RIVNUT 182 & 210 ONLY | 4 | |
| - 9 | AN515-8R8 | SCREW 205 & 336 ONLY | 4 | |
| - 10 | MS20365-632C | NUT 205 ONLY | 4 | |
| - 11 | 54830-102 | * SHOCKMOUNT | 1 | |
| | | ---*--- | | |
| - 12 | 0511030-2 | ANGLE 180 & 185 ONLY | 1 | |
| - 13 | 0511030-3 | ANGLE 180 & 185 ONLY | 1 | |
| | | ATTACHING PARTS | | |
| - 14 | AN515-8R8 | SCREW | 4 | |
| - 15 | AN960-8 | WASHER-FLAT | 4 | |
| - 16 | MS20365-832C | NUT | 4 | |
| | | ---*--- | | |
| - 17 | 0770094-1 | ANGLE 180 & 185 ONLY | 1 | |
| | | ATTACHING PARTS | | |
| - 18 | AN515-8R10 | SCREW | 2 | |
| - 19 | AN960-10 | WASHER-FLAT | 2 | |
| - 20 | MS20365-832C | NUT | 2 | |
| | | ---*--- | | |
| - 21 | 1270627-9 | SIDE ANGLE ASSY-L.H. 205 ONLY | 1 | |
| | 1270627-11 | SIDE ANGLE | 1 | |
| | NAS697A3 | NUTPLATE | 1 | |
| | NAS696A3 | NUTPLATE | 1 | |
| - 22 | 1270627-10 | SIDE ANGLE ASSY-R.H. 205 ONLY | 1 | |
| | 1270627-12 | SIDE ANGLE | 1 | |
| | NAS697A3 | NUTPLATE | 1 | |
| | NAS696A3 | NUTPLATE | 1 | |
| | 1270627-65 | ATTACH ANGLE ASSY 205 ONLY | 1 | |
| - 23 | 1270627-66 | ATTACH ANGLE | 2 | |
| - 24 | 1270627-67 | ATTACH ANGLE | 1 | |
| - 25 | 1270627-68 | ATTACH ANGLE | 1 | |
| | | ATTACHING PARTS | | |
| - 26 | AN520-10R6 | SCREW 205 ONLY | 4 | |
| | | ---*--- | | |
| | 1470056-9 | SUPPORT ASSY 336 ONLY | 2 | |
| - 27 | 1470056-8 | SUPPORT | 2 | |
| - 28 | NAS686A3 | NUTPLATE | 8 | |
| | | ATTACHING PARTS | | |
| | AN515-8R6 | SCREW | 8 | |
| | MS20365-832C | NUT | 8 | |
| | AN960-8 | WASHER | 8 | |
| | | ---*--- | | |

CONTINUED ON NEXT PAGE

| FIGURE AND INDEX NO. | PART NUMBER | DESCRIPTION 1 2 3 4 5 6 7 | UNITS PER ASSY | USABLE ON CODE |
|---|---|---|---|---|
| 5-4- 29 | 0770039-1 | HEADSET ASSY | 1 | |
| - 30 | S1103-1 | PHONE JACK | 1 | |
| | 0770622-1 | FILTER-MAGNETO 182 ONLY | 1 | |
| - 31 | S1232-15 | CIRCUIT BREAKER 182,205 & 210 ONLY | 1 | |
| - 32 | PSM-10N | CIRCUIT BREAKER 180 & 185 ONLY | 1 | |
| | S1360-8 | CIRCUIT BREAKER 336 ONLY | 1 | |
| - 33 | 0111-351 | RHEOSTAT ALL MODELS EXCEPT 336 | 1 | |
| - 34 | S1163-2 | KNOB-RHEOSTAT ALL MODELS EXCEPT 336 | 1 | |
| - 35 | X12870 | DROPPING RESISTOR-ENG INST LT DIM-OPT 336 ONLY | 1 | |
| | X12871 | DROPPING RESISTOR-SW PANEL LT DIM-OPT 336 ONLY | 1 | |
| | | DROPPING RESISTOR-FLT INST & RADIO DIAL LT-OPT 336 ONLY SEE FIGURE 10-2 | 1 | |
| | 1470030-1 | KNOB 336 ONLY | 1 | |
| | 1470030-2 | KNOB 336 ONLY | 1 | |
| | 1470030-3 | KNOB 336 ONLY | 1 | |
| | 7751 | SPRING WASHER 336 ONLY | 1 | |
| | 7754 | SPRING WASHER 336 ONLY | 1 | |
| | 22653-718LR3 | SWITCH 336 ONLY | 1 | |
| - 36 | | MICROPHONE INSTALLATION SEE FIGURE 9-5 | 1 | |
| - 37 | | SPEAKER INSTALLATION SEE FIGURE 9-4 | 1 | |
| - 38 | | VHF TRANSMITTING ANTENNA SEE FIGURE 8-1 | 1 | |
| - 39 | | OMNI ANTENNA SEE FIGURE 8-2 | 1 | |
| - 40 | | CABLE ASSY-TRANSCEIVER TO VHF TRANSMITTING ANTENNA | NP | |
| | RG-58A/U | COAXIAL CABLE-BULK ITEM | AR | |
| | UG-913/U | PLUG-COAXIAL-RT ANGLE ALL MODELS EXCEPT 336 | 1 | |
| | AMP-31889 | TERMINAL ALL MODELS EXCEPT 336 | 1 | |
| | AMP-31902 | TERMINAL ALL MODELS EXCEPT 336 | 1 | |
| | UG-88C/U | PLUG-COAXIAL 336 ONLY | 2 | |
| - 41 | | CABLE ASSY-TRANSCEIVER TO OMNI ANTENNA ALL MODELS EXCEPT 336 | NP | |
| | RG-58A/U | COAXIAL CABLE-BULK ITEM | AR | |
| | UG-88C/U | PLUG-COAXIAL | 1 | |
| | 13B | PLUG-MOTOROLA TYPE | 1 | |
| - 42 | | CABLE ASSY-TRANSCEIVER TO OMNI CABLE CONNECTION AT WING ROOT 336 ONLY | NP | |
| | RG-58A/U | COAXIAL CABLE-BULK ITEM | AR | |
| | UG-88C/U | PLUG-COAXIAL | 1 | |
| | 13B | PLUG-MOTOROLA TYPE | 1 | |
| - 43 | | CABLE ASSY-WING ROOT TO BOOM CONNECTION-SUPPLIED ON AIRCRAFT AS STANDARD EQUIPMENT 336 ONLY | REF | |
| | RG-58A/U | COAXIAL CABLE-BULK ITEM | AR | |
| | UG-88C/U | PLUG-COAXIAL | 1 | |
| | UG-89/U | RECEPTACLE-COAXIAL | 1 | |
| - 44 | | CABLE ASSY-BOOM CONNECTION TO BALUN STUB 336 ONLY | NP | |
| | RG-58A/U | COAXIAL CABLE-BULK ITEM | AR | |
| | UG-89/U | RECEPTACLE-COAXIAL | 1 | |
| | UG-88C/U | PLUG-COAXIAL | 1 | |
| - 45 | 90603-60 | * CABLE ASSY-POWER SUPPLY TO TRANSCEIVER NOT USED WHEN NAV SYSTEM IS ADDED ALL MODELS EXCEPT 336 | 1 | |
| - 46 | 90603-16 | * CABLE ASSY-POWER SUPPLY TO TRANSCEIVER 336 ONLY | 1 | |
| | | SINGLE NAV COMM SYSTEM-THE FOLLOWING PARTS ARE REQUIRED IN ADDITON TO THE PRECEDING PARTS WHEN THE NAV SYSTEM IS ADDED. ITEM 47 REPLACES ITEM 45 ON ALL MODELS EXCEPT 336. EITHER ITEM 48 OR ITEM 49 IS USED | | |
| - 47 | 90609-60 | * CABLE ASSY-POWER SUPPLY TO TRANSCEIVER & VOA-4 OR -5 INDICATOR ITEM 47 REPLACES ITEM 45 ON ALL MODELS EXCEPT 336 | 1 | |
| - 48 | VOA-4 | * CONVERTER-INDICATOR | AR | |
| - 49 | VOA-5 | * CONVERTER-INDICATOR | AR | |
| | A3106A-20-27S | PLUG-INDICATOR | 1 | |
| | AN3057-12 | CLAMP | 1 | |
| | | ATTACHING PARTS | | |
| | AN515-B6R10 | SCREW | 3 | |
| | | ---*--- | | |

CONTINUED ON NEXT PAGE

| FIGURE AND INDEX NO. | PART NUMBER | DESCRIPTION<br>1 2 3 4 5 6 7 | UNITS PER ASSY | USABLE ON CODE |
|---|---|---|---|---|
| | | DUAL NAV COMM SYSTEM-THE FOLLOWING PARTS ARE REQUIRED IN ADDITION TO THOSE NECESSARY FOR A SINGLE NAV COMM SYSTEM ITEM 53 REPLACES ITEM 41. | | |
| - 50 | | CABLE ASSY-TRANSCEIVER TO TEE CONNECTOR | NP | |
| - 51 | RG-58A/U | COAXIAL CABLE-BULK ITEM | AR | |
| | 13B | PLUG-MOTOROLA TYPE | 2 | |
| - 52 | UG-88C/U | PLUG-COAXIAL | 2 | |
| - 53 | | CABLE ASSY-TEE CONNECTOR TO OMNI ANTENNA REPLACES ITEM 41 | NP | |
| | RG-58A/U | COAXIAL CABLE-BULK ITEM | AR | |
| | UG-88C/U | PLUG | 1 | |
| - 54 | UG-89/U | JACK-COAXIAL | 1 | |
| - 55 | 90609-60 | * CABLE ASSY-POWER SUPPLY TO TRANSCEIVER & VOA-4 OR VOA-5 INDICATOR | 1 | |
| - 56 | | CABLE ASSY-TRANSCEIVER TO VHF TRANSCEIVER ANTENNA | NP | |
| | RG-58A/U | COAXIAL CABLE-BULK ITEM | AR | |
| | UG-913/U | RECEPTACLE-COAXIAL | 1 | |
| | AMP-31889 | TERMINAL | 1 | |
| | AMP-31902 | TERMINAL | 1 | |
| - 57 | UG-274/U | TEE CONNECTOR-COAXIAL | 1 | |
| - 58 | MARK X | * TRANSCEIVER | 1 | |
| | 21A-GP-P | * RECEPTACLE | 1 | |
| | | ATTACHING PARTS | | |
| | S1021Z6-8 | SCREW | 4 | |
| | AN960-6L | WASHER-FLAT | 4 | |
| | NAS446-2-3 | NUT<br>---*-- | 4 | |
| - 59 | T12MP-8 | * POWER UNIT-AUDIO | 1 | |
| | MRA20S-GH/VL | PLUG ASSY-POWER CABLE | 1 | |
| | MI-18MHR-E | PLUG-AUDIO CABLE | 1 | |
| | MRA-VL | LEVER & PIVOT ASSY-AUDIO CABLE | 1 | |
| | | ATTACHING PARTS | | |
| - 60 | AN515-8R8 | SCREW 180 & 185 ONLY | 8 | |
| - 61 | AN960-8 | WASHER 180 & 185 ONLY | 8 | |
| - 62 | MS20365-832C | NUT 180 & 185 ONLY | 8 | |
| - 63 | AN515-8R16 | SCREW 182 & 210 ONLY | 4 | |
| - 64 | AN936A8 | LOCKWASHER 182 & 210 ONLY | 4 | |
| | A8K75 | RIVNUT 182 & 210 ONLY | 4 | |
| - 65 | AN515-8R8 | SCREW 205 ONLY | 4 | |
| - 66 | MS20365-632C | NUT 205 ONLY | 4 | |
| - 67 | 54830-102 | SHOCKMOUNT<br>---*--- | 1 | |
| - 68 | 0511030-2 | ANGLE 180 & 185 ONLY | 1 | |
| - 69 | 0511030-3 | ANGLE 180 & 185 ONLY | 1 | |
| | | ATTACHING PARTS | | |
| | AN515-8R8 | SCREW | 4 | |
| | AN960-8 | WASHER-FLAT | 4 | |
| | MS20365-832C | NUT<br>---*--- | 4 | |

CONTINUED ON NEXT PAGE

| FIGURE AND INDEX NO. | PART NUMBER | DESCRIPTION 1 2 3 4 5 6 7 | UNITS PER ASSY | USABLE ON CODE |
|---|---|---|---|---|
| 5-4- | 1270627-9 | SIDE ANGLE ASSY-L.H. 205 ONLY | 1 | |
| | 1270627-11 | SIDE ANGLE | 1 | |
| | NAS697A3 | NUTPLATE | 1 | |
| | NAS696A3 | NUTPLATE | 1 | |
| | 1270627-10 | SIDE ANGLE ASSY-R.H. 205 ONLY | 1 | |
| | 1270627-12 | SIDE ANGLE | 1 | |
| | NAS697A3 | NUTPLATE | 1 | |
| | NAS696A3 | NUTPLATE | 1 | |
| | 1270627-65 | ATTACH ANGLE ASSY 205 ONLY | 1 | |
| | 1270627-66 | ATTACH ANGLE | 2 | |
| | 1270627-67 | ATTACH ANGLE | 1 | |
| | 1270627-68 | ATTACH ANGLE | 1 | |
| | | ATTACHING PARTS | | |
| | AN520-10R6 | SCREW 205 ONLY | 4 | |
| | | ---*--- | | |
| - 70 | VOA-4 | * CONVERTER-INDICATOR | AR | |
| - 71 | VOA-5 | * CONVERTER-INDICATOR | AR | |
| | | ATTACHING PARTS | | |
| | AN515B6R10 | SCREW | 3 | |
| | | ---*--- | | |
| | A3106A-20-27S | PLUG-INDICATOR NARO | 1 | |
| | AN3057-12 | CLAMP | 1 | |
| - 72 | | VHF ANTENNA INSTALLATION SEE FIGURE 8-1 | | |
| - 73 | S1232-15 | CIRCUIT BREAKER 182, 205 & 210 | 1 | |
| - 74 | PSM-10N | CIRCUIT BREAKER 180 & 185 | 1 | |
| | | RADIO COOLING INSTALLATION SEE FIGURE 10-1 | 1 | |
| - 75 | | AUDIO ISOLATION AMPLIFIER SEE FIGURES 9-1 & 9-2 | 1 | |

* ITEMS MARKED WITH ASTERISK SUPPLIED WHEN COMPLETE RADIO IS PURCHASED.

NARCO MBT-12 MARKER BEACON RECEIVER INSTALLATION

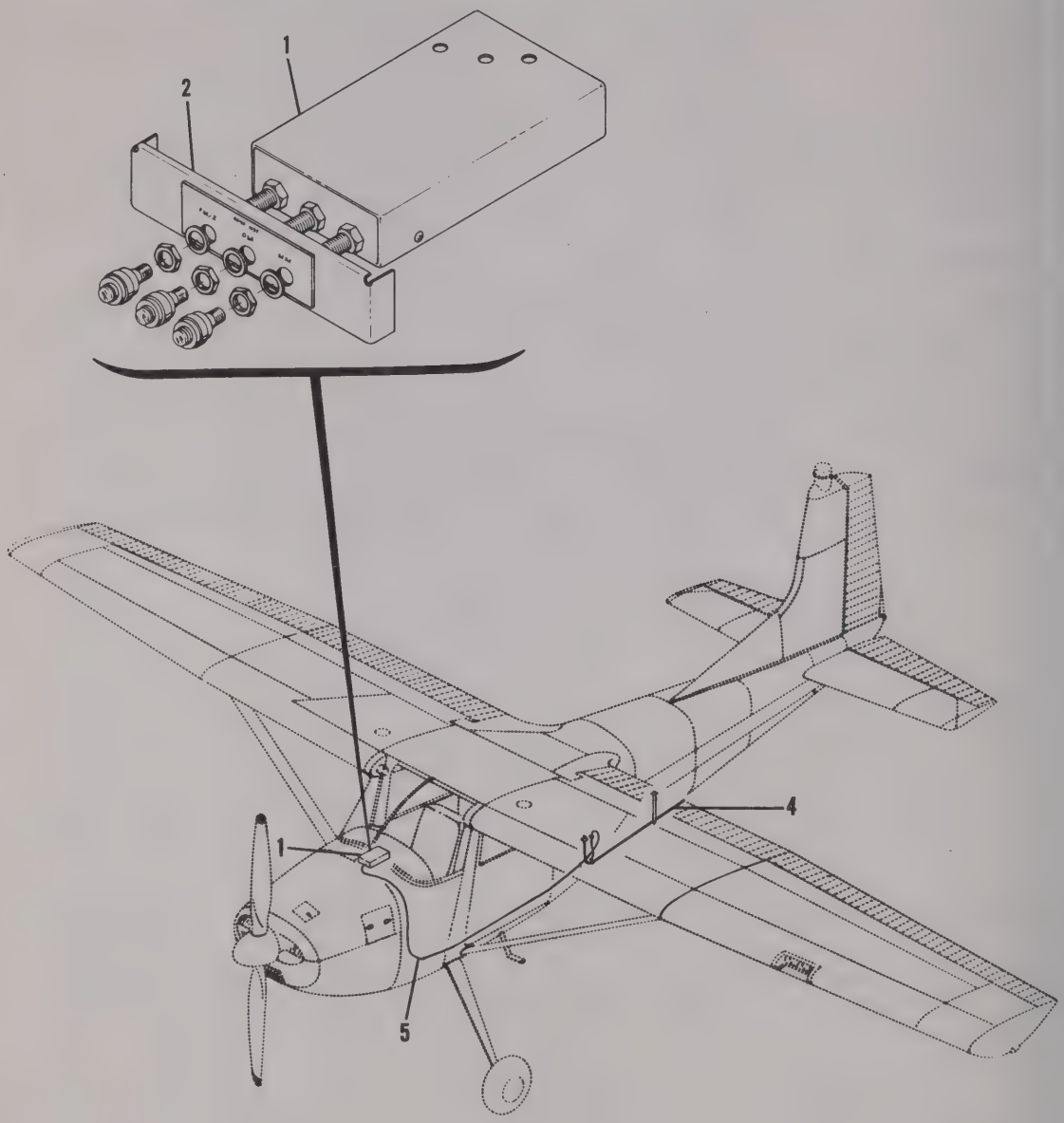


## 180 SERIAL 18051184 THRU 18051312
## 185 SERIAL 185-0498 THRU 185-0653

Figure 5-5. Narco MBT-12 Marker Beacon Receiver Installation (Sheet 1 of 3)

NARCO MBT-12 MARKER BEACON RECEIVER INSTALLATION

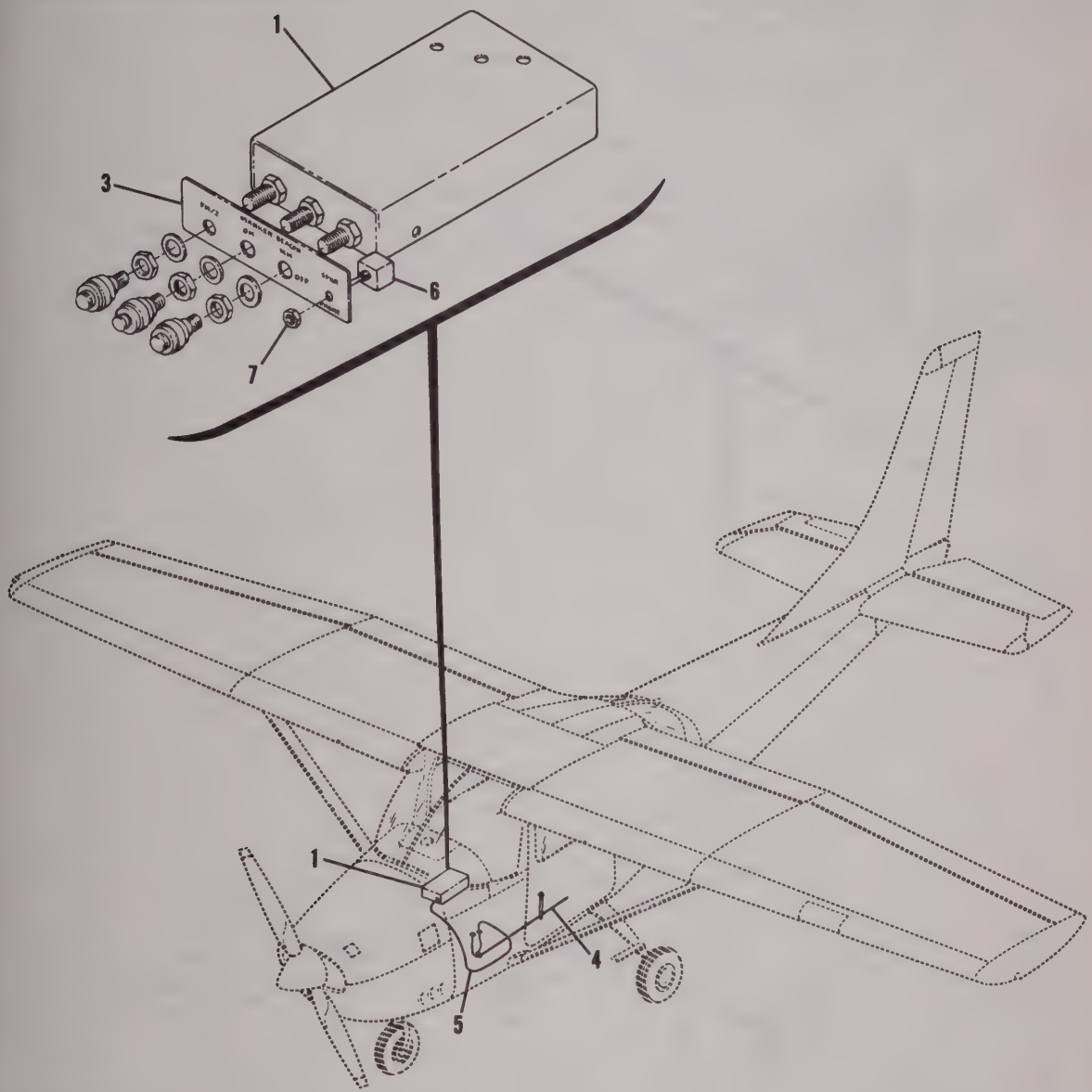


## 182 SERIAL 18254347 THRU 18255058

Figure 5-5. Narco MBT-12 Marker Beacon Receiver Installation (Sheet 2 of 3)

NARCO MBT-12 MARKER BEACON RECEIVER INSTALLATION

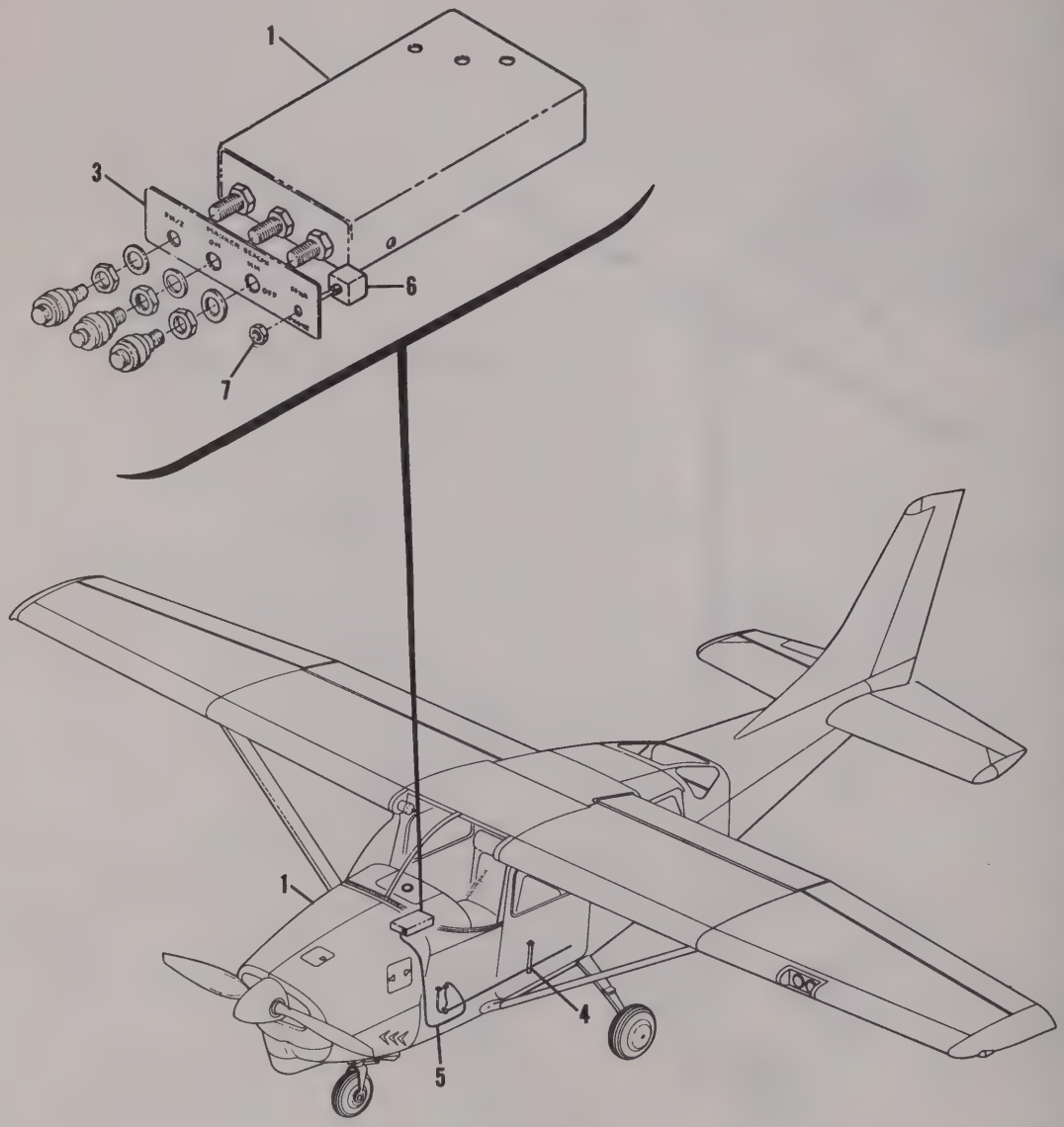


## 205 SERIAL 205-0001 THRU 205-0480
## 210 SERIAL 21058111 THRU 21058220

Figure 5-5. Narco MBT-12 Marker Beacon Receiver Installation (Sheet 3 of 3)

| FIGURE AND INDEX NO. | PART NUMBER | DESCRIPTION<br>1 2 3 4 5 6 7 | UNITS PER ASSY | USABLE ON CODE |
|---|---|---|---|---|
| 5-5- | | MARKER BEACON RECEIVER INSTALLATION-NARCO MBT-12 MODELS-<br>180, 182, 185, 205 & 210 ONLY | NP | |
| - 1 | MBT-12 | * MARKER BEACON RECEIVER-MBT-12---------- | 1 | |
| - 2 | 0770047-1 | ADAPTER PLATE 180 & 185 ONLY---------- | 1 | |
| | | ATTACHING PARTS | | |
| | S1021Z6-6 | SCREW 180 & 185 ONLY---------- | 4 | |
| | NAS446-2-3 | NUT 180 & 185 ONLY---------- | 4 | |
| | | ---*--- | | |
| - 3 | 0770638-1 | PLACARD 182, 205 & 210 ONLY---------- | 1 | |
| - 4 | | MARKER BEACON ANTENNA INSTALLATION SEE FIGURE 8-4----- | 1 | |
| - 5 | | CABLE ASSY-RECEIVER TO MARKER BEACON ANT---------- | NP | |
| | RG-58A/U | COAXIAL CABLE-BULK ITEM---------- | AR | |
| | UG-88C/U | PLUG-COAXIAL---------- | 1 | |
| | S1367-1-8 | TERMINAL---------- | 1 | |
| | S1367-2-8 | TERMINAL---------- | 1 | |
| - 6 | 8867K1 | SWITCH 182, 205 & 210 ONLY---------- | 1 | |
| | | ATTACHING PARTS | | |
| - 7 | 15-835-3 | ADAPTER NUT 182,205 & 210 ONLY---------- | 1 | |
| | | ---*--- | | |
| | S1232-5 | CIRCUIT BREAKER 182,205 & 210 ONLY---------- | 1 | |
| | 0713026-4 | SWITCH 180 & 185 ONLY---------- | 1 | |
| | 0713303-2 | KNOB 180 & 185 ONLY---------- | 1 | |

* ITEMS MARKED WITH ASTERISK SUPPLIED WHEN COMPLETE RADIO IS PURCHASED.

NARCO DME RADIO INSTALLATION

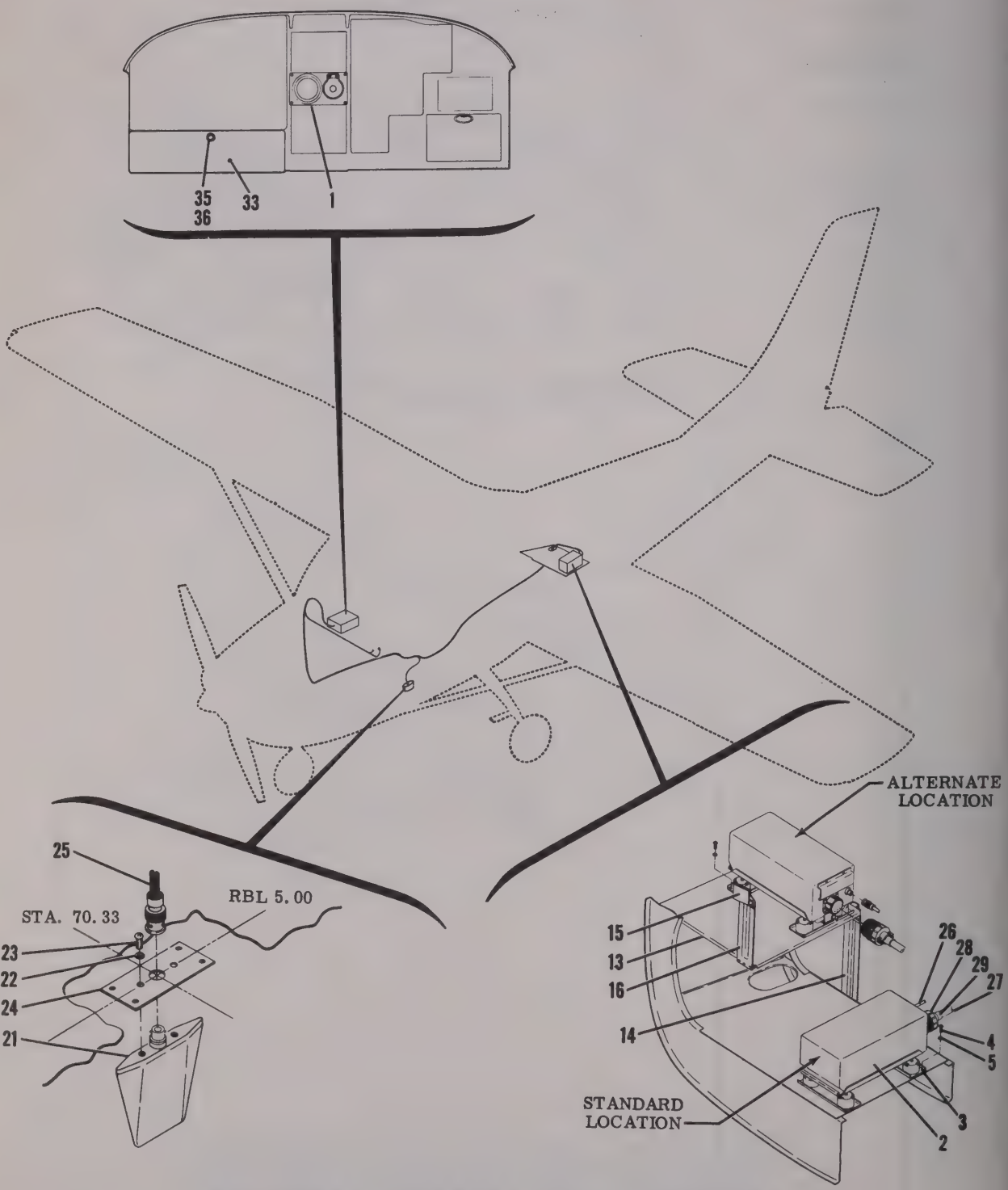


182 SERIAL 18254347 THRU 18255844

Figure 5-6. Narco UDI-2 DME Installation (Sheet 1 of 4)

NARCO DME RADIO INSTALLATION

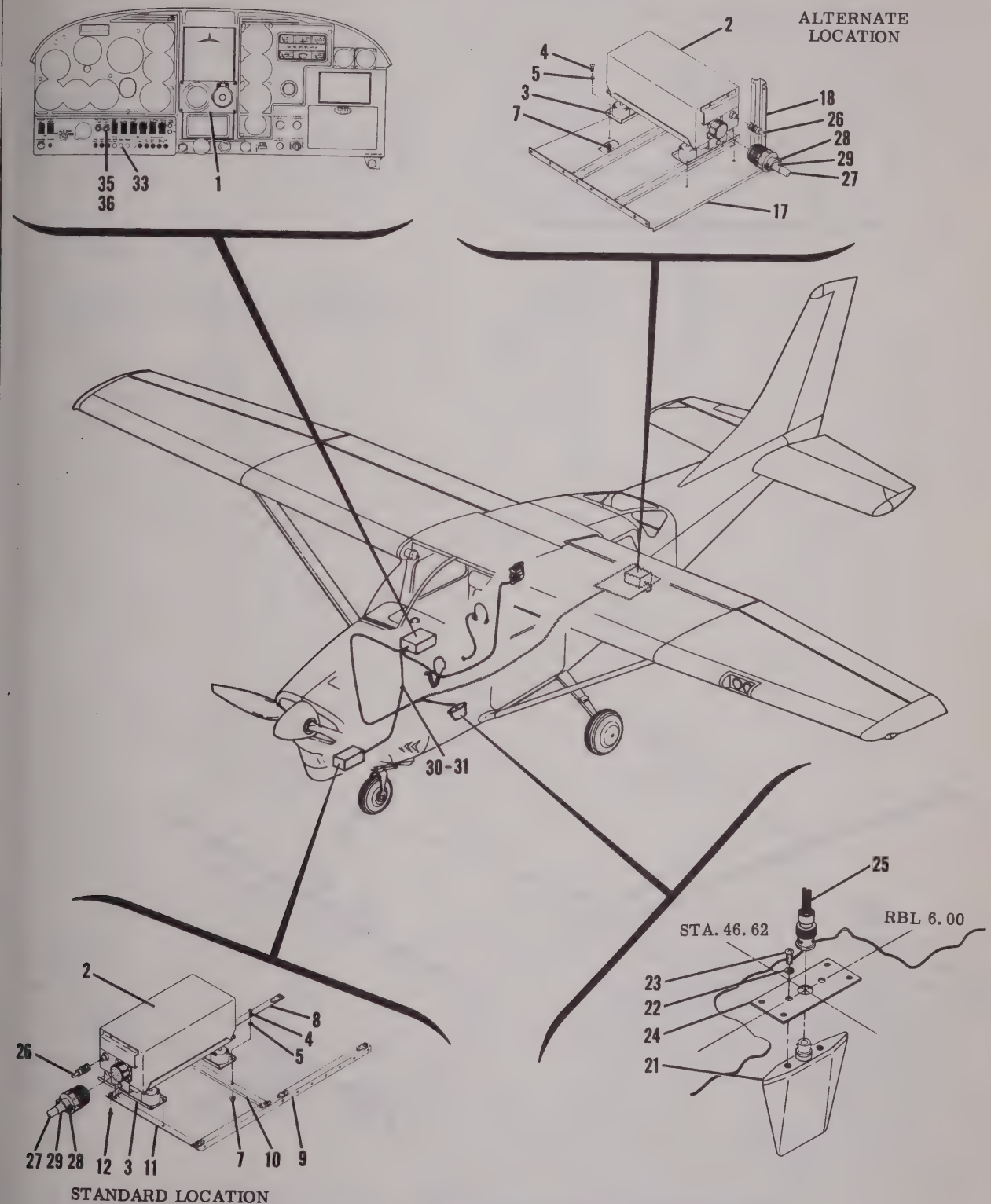


## 205 SERIAL 205-0001 THRU 205-0577

Figure 5-6. Narco UDI-2 DME Installation (Sheet 2 of 4)

NARCO DME RADIO INSTALLATION

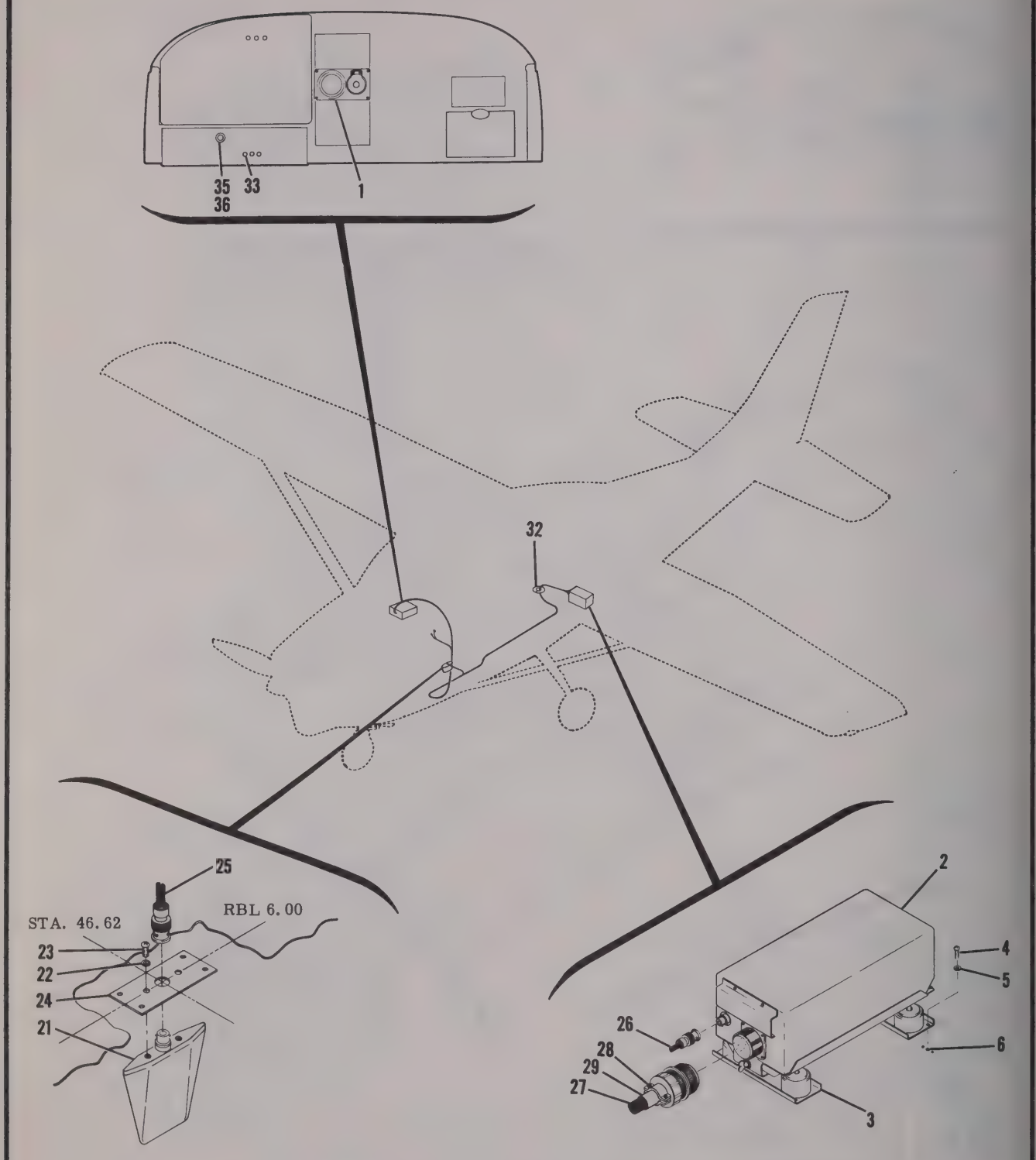


## 210 SERIAL 21058111 THRU 21058510

Figure 5-6. Narco UDI-2 DME Installation (Sheet 3 of 4)

NARCO DME RADIO INSTALLATION

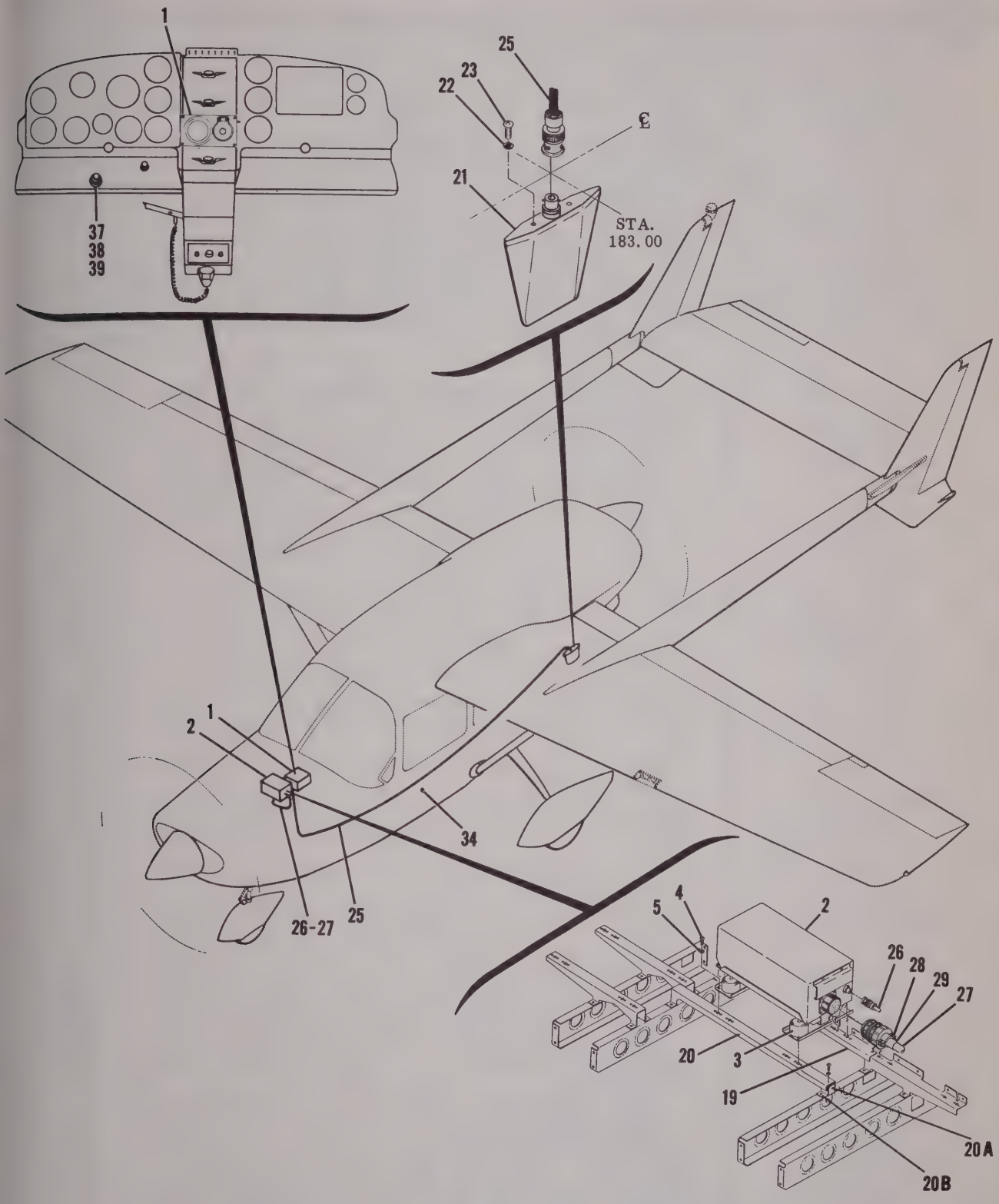


## 336 SERIAL 336-0001 THRU 336-0195

Figure 5-6. Narco UDI-2 DME Installation (Sheet 4 of 4)

| FIGURE AND INDEX NO. | PART NUMBER | DESCRIPTION<br>1 2 3 4 5 6 7 | UNITS PER ASSY | USABLE ON CODE |
|---|---|---|---|---|
| 5-6- | | NARCO UDI-2 DME RADIO INSTALLATION---------- | NP | |
| - 1 | UDI-2 | * DME INTERROGATOR---------- | 1 | |
| | | ATTACHING PARTS | | |
| | S1021Z6-8 | SCREW---------- | 4 | |
| | AN960-6 | WASHER---------- | 4 | |
| | NAS446-2-3 | NUT ---------- | 4 | |
| | | ---*--- | | |
| - 2 | T12RP-9 | * RANGE-POWER UNIT 12 VOLT---------- | 1 | |
| | T24RP-9 | * RANGE-POWER UNIT 24 VOLT---------- | 1 | |
| | | ATTACHING PARTS | | |
| - 3 | 54830-101 | * SHOCKMOUNT---------- | 1 | |
| - 4 | AN515-8R16 | SCREW---------- | 4 | |
| - 5 | AN936A8 | WASHER---------- | 4 | |
| - 6 | A8K75 | RIVNUT GD 182 & 210 ONLY---------- | 4 | |
| - 7 | MS20365-832C | NUT 205 & 206 ONLY---------- | 4 | |
| - 8 | 1270627-86 | SIDE ANGLE ASSEMBLY R.H. 205 & 206 ONLY---------- | 1 | |
| - 9 | 1270627-85 | SIDE ANGLE ASSEMBLY L.H. 205 & 206 ONLY---------- | 1 | |
| - 10 | 1270627-58 | ATTACH ANGLE REAR 205 & 206 ONLY---------- | 1 | |
| - 11 | 1270627-57 | ATTACH ANGLE FRONT 205 & 206 ONLY---------- | 1 | |
| | | ATTACHING PARTS | | |
| - 12 | AN520-10R6 | SCREW 205 & 206 ONLY---------- | 4 | |
| | | ---*--- | | |
| - 13 | 0770650-1 | AUX RADIO SHELF 182 ONLY USED ONLY WHEN STANDARD-- | 1 | |
| | | RADIO RACK IS FULL | | |
| - 14 | 0770651-1 | SUPPORT-AUX RADIO SHELF 182 ONLY---------- | 1 | |
| - 15 | 0770651-2 | SUPPORT-AUX RADIO SHELF 182 ONLY---------- | 1 | |
| - 16 | 0770651-3 | SUPPORT-AUX RADIO SHELF 182 ONLY---------- | 1 | |
| - 17 | 1270631-1 | AUX RADIO SHELF 205 & 206 ONLY USED ONLY WHEN----- | 1 | |
| | | STANDARD RADIO RACK IS FULL OF OTHER RADIO EQUIPMENT | | |
| - 18 | 1270631-2 | AUX RADIO SHELF SUPPORT 205 & 206 ONLY---------- | 1 | |
| - 19 | 1470056-11 | SUPPORT ASSY 336 ONLY---------- | 1 | |
| | 1470056-10 | SUPPORT---------- | 1 | |
| | NAS686A3 | NUTPLATE---------- | 4 | |
| | | ATTACHING PARTS | | |
| | AN515-8R6 | SCREW 336 ONLY---------- | 2 | |
| | AN960-8 | WASHER 336 ONLY---------- | 2 | |
| | MS20365-832C | NUT 336 ONLY---------- | 2 | |
| - 20 | 1470056-13 | SUPPORT ASSY 336 ONLY---------- | 1 | |
| | 1470056-12 | SUPPORT---------- | 1 | |
| | NAS696A3 | NUTPLATE---------- | 4 | |
| | | ATTACHING PARTS | | |
| | AN515-8R6 | SCREW 336 ONLY---------- | 4 | |
| | AN960-8 | WASHER 336 ONLY---------- | 4 | |
| | MS20365-832C | NUT 336 ONLY---------- | 4 | |
| | | ---*--- | | |
| -20A | 1470113-7 | SUPPORT---------- | 1 | |
| | | ATTACHING PARTS | | |
| -20B | AN515-8R6 | SCREW---------- | 3 | |
| | AN960-8 | WASHER---------- | 3 | |
| | MS20365-832C | NUT ---------- | 3 | |
| | | ---*--- | | |
| - 21 | 71159 | ANTENNA-BLADE---------- | 1 | |
| | | ATTACHING PARTS | | |
| - 22 | AN936B10 | LOCKWASHER---------- | 2 | |
| - 23 | AN520-10R5 | SCREW---------- | 2 | |
| - 24 | 0770675-1 | DOUBLER ALL MODELS EXCEPT 336---------- | 1 | |
| | | ---*--- | | |
| - 25 | | CABLE ASSY-DME TO ANTENNA---------- | NP | |
| | RG-58A/U | COAXIAL CABLE-BULK ITEM---------- | AR | |
| | UG-88C/U | PLUG-COAXIAL---------- | 2 | |
| - 26 | | CABLE ASSY-DME TO POWER UNIT---------- | NP | |
| | RG-58A/U | COAXIAL CABLE-BULK ITEM---------- | AR | |
| | UG-88C/U | PLUG-COAXIAL---------- | 2 | |
| - 27 | | * CABLE ASSY-DME TO POWER UNIT 182, 205, 206 & 210 AFT-- | NP | |
| | | LOCATION ONLY | | |
| | MS3106A-22-14S | * RECEPTACLE-POWER UNIT END---------- | 1 | |
| - 28 | AN3057-12 | * CLAMP-POWER UNIT END---------- | 1 | |
| - 29 | AN3020-12 | * BUSHING-POWER UNIT END---------- | 1 | |
| | MRA 20S-GH/VL | * RECEPTACLE-DME END---------- | 1 | |
| - 30 | 1213614-3 | COVER PLATE 205 & 206 ONLY---------- | 1 | |
| - 31 | 1213614-4 | COVER PLATE 205 & 206 ONLY---------- | 1 | |
| | NAS557-3A | GROMMET 205 & 206 ONLY---------- | 1 | |
| | NAS557-6A | GROMMET 205 & 206 ONLY---------- | 1 | |
| | | 17-2 | | |
| | | CONTINUED ON NEXT PAGE | 1 | |

| FIGURE AND INDEX NO. | PART NUMBER | DESCRIPTION<br>1 2 3 4 5 6 7 | UNITS PER ASSY | USABLE ON CODE |
|---|---|---|---|---|
| 5-6- 32 | S1261-1 | COVER PLATE 210 ONLY---------- | 1 | |
| | MS35489-A/R | GROMMET 210 ONLY---------- | 1 | |
| - 33 | S1232-10 | CIRCUIT BREAKER 182, 205, 206 & 210 ONLY---------- THRU 1963 ONLY | 1 | |
| | S1360-10 | CIRCUIT BREAKER ALL 1964 MODELS & ON EXCEPT---------- 336 MODELS | 1 | |
| - 34 | S1360-5 | CIRCUIT BREAKER 336 ONLY---------- | 1 | |
| - 35 | R-12 1/2-75-RS34 | RHEOSTAT 182, 205, 206 & 210 ONLY---------- | 1 | |
| - 36 | S1163-2 | KNOB-RHEOSTAT 182, 205, 206 & 210 ONLY---------- | 1 | |
| - 37 | X12870 | DROPPING RESISTOR-ENG INST LT DIM OPT 336 ONLY-------- | 1 | |
| - 38 | X12871 | DROPPING RESISTOR-SW PANEL LT DIM OPT 336 ONLY-------- | 1 | |
| - 39 | | DROPPING RESISTOR-FLT INST & RADIO DIAL LT OPT 336 ONLY SEE FIGURE 10-2 FOR VENDOR PART NUMBER | 1 | |
| | 1470030-1 | KNOB 336 ONLY---------- | 1 | |
| | 1470030-2 | KNOB 336 ONLY---------- | 1 | |
| | 1470030-3 | KNOB 336 ONLY---------- | 1 | |
| | 7751 | SPRING WASHER 336 ONLY---------- | 1 | |
| | 7754 | SPRING WASHER 336 ONLY---------- | 1 | |
| | 22653-718LR3 | SWITCH 336 ONLY---------- | 1 | |

* ITEMS MARKED WITH ASTERISK SUPPLIED WHEN COMPLETE RADIO IS PURCHASED

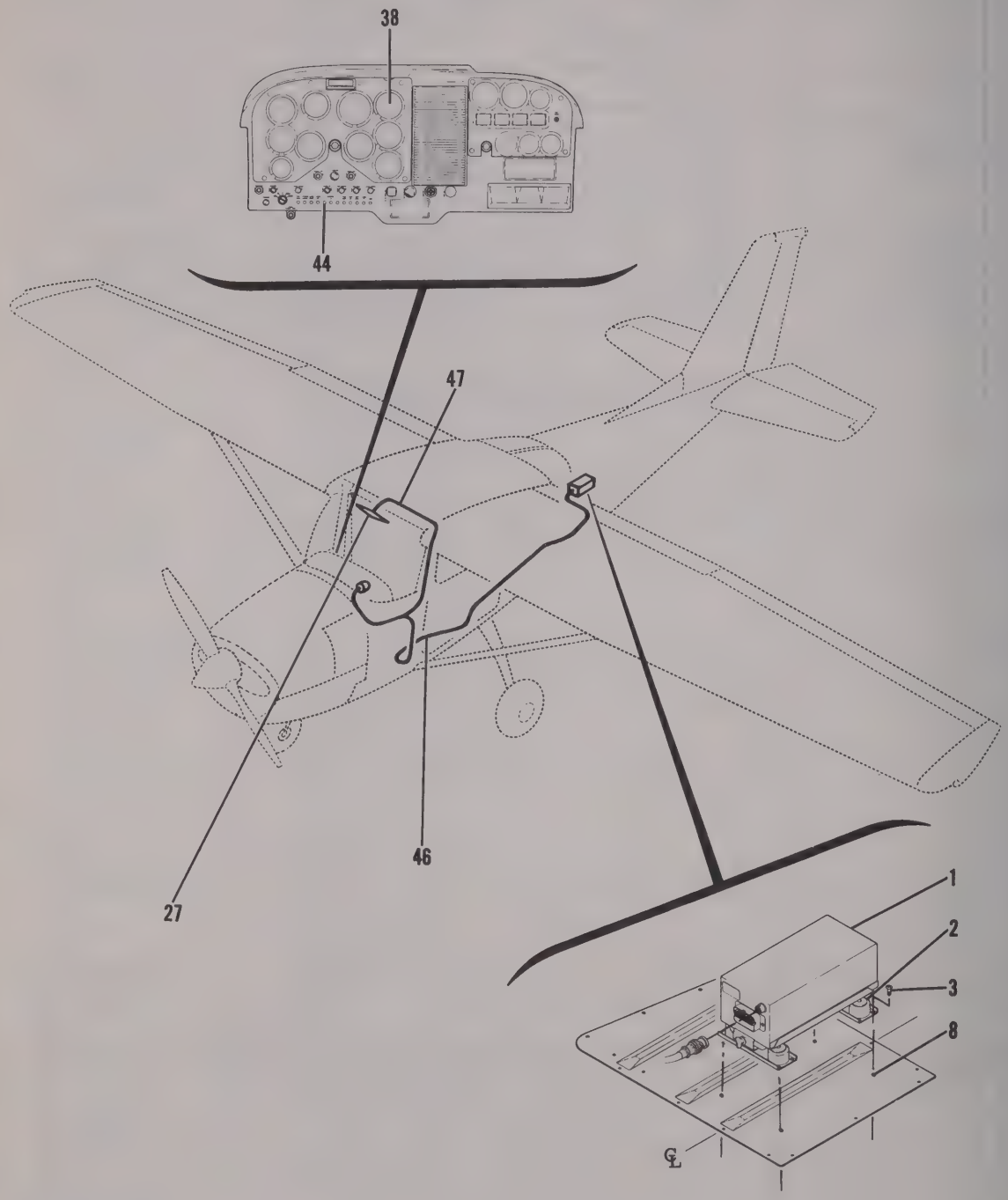


## 172 SERIAL 17251823 THRU 17253392

Figure 5-7. Narco (UGR-1A) Glide Slope Receiver Installation - Sheet 1

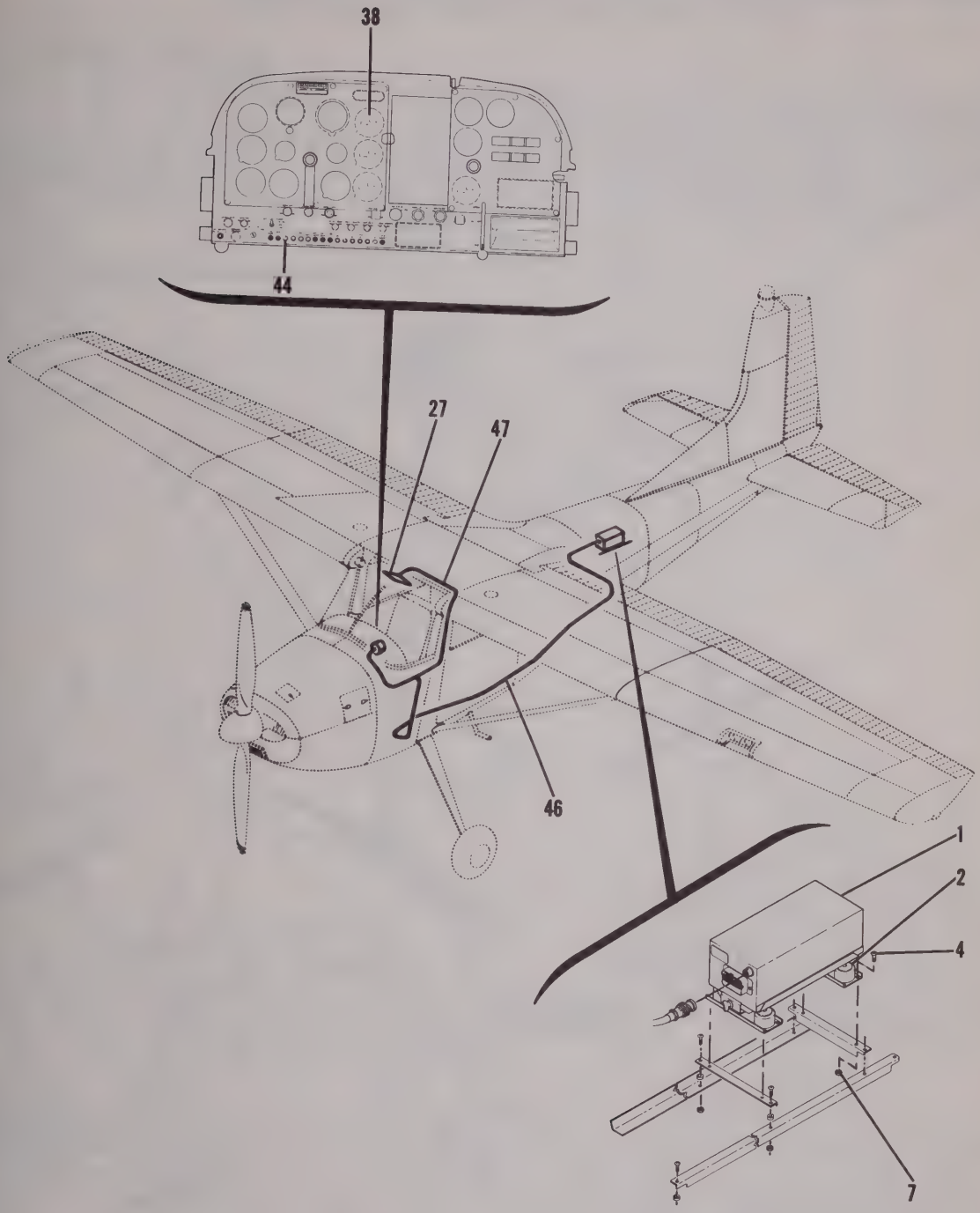


## 180 SERIAL 18051446 THRU 18051607
## 185 SERIAL 185-0777 THRU 185-0967

Figure 5-7. Narco (UGR-1A) Glide Slope Receiver Installation - Sheet 2

NARCO (UGR-1) GLIDE SLOPE RECEIVER INSTALLATION

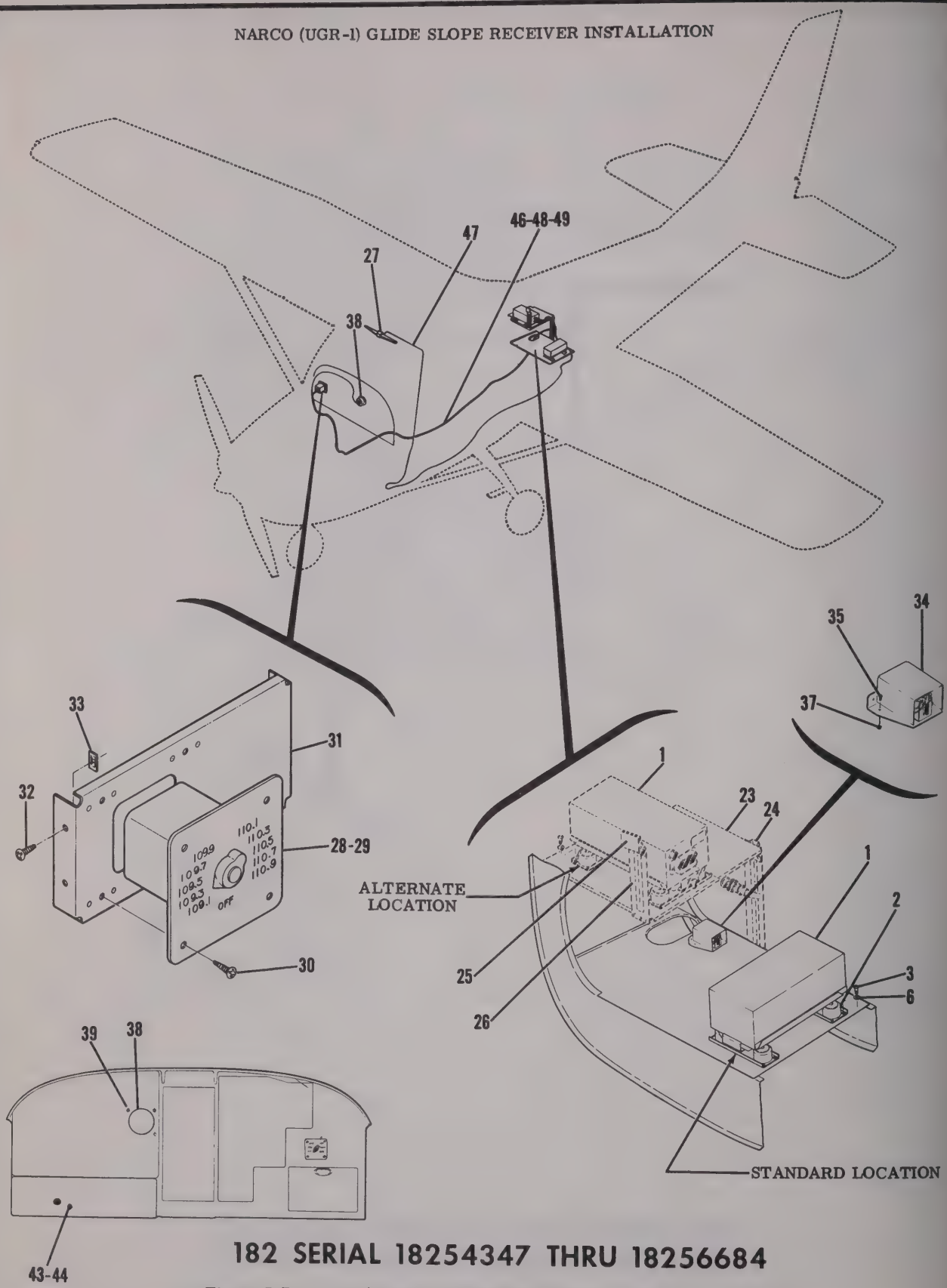


## 182 SERIAL 18254347 THRU 18256684

Figure 5-7. Narco (UGR-1A) Glide Slope Receiver Installation - Sheet 3

NARCO (UGR-1) GLIDE SLOPE RECEIVER INSTALLATION

205 SERIAL 205-0001 THRU 205-0577
206 SERIAL 206-0001 THRU 206-0275
P206 SERIAL P206-0001 THRU P206-0160
U206 SERIAL U206-0276 THRU U206-0437

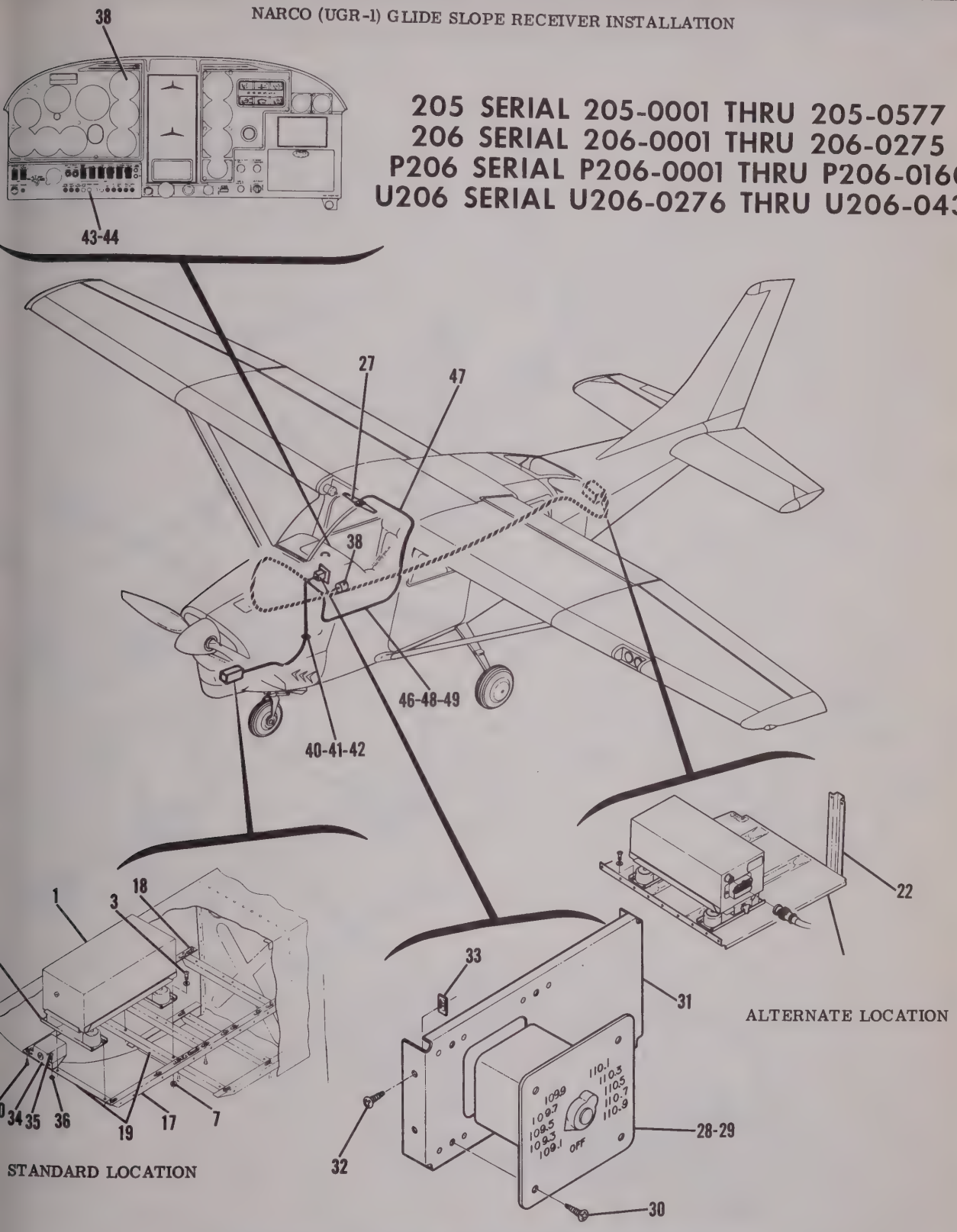


Figure 5-7. Narco (UGR-1A) Glide Slope Receiver Installation - Sheet 4

NARCO (UGR-L) GLIDE SLOPE RECEIVER INSTALLATION

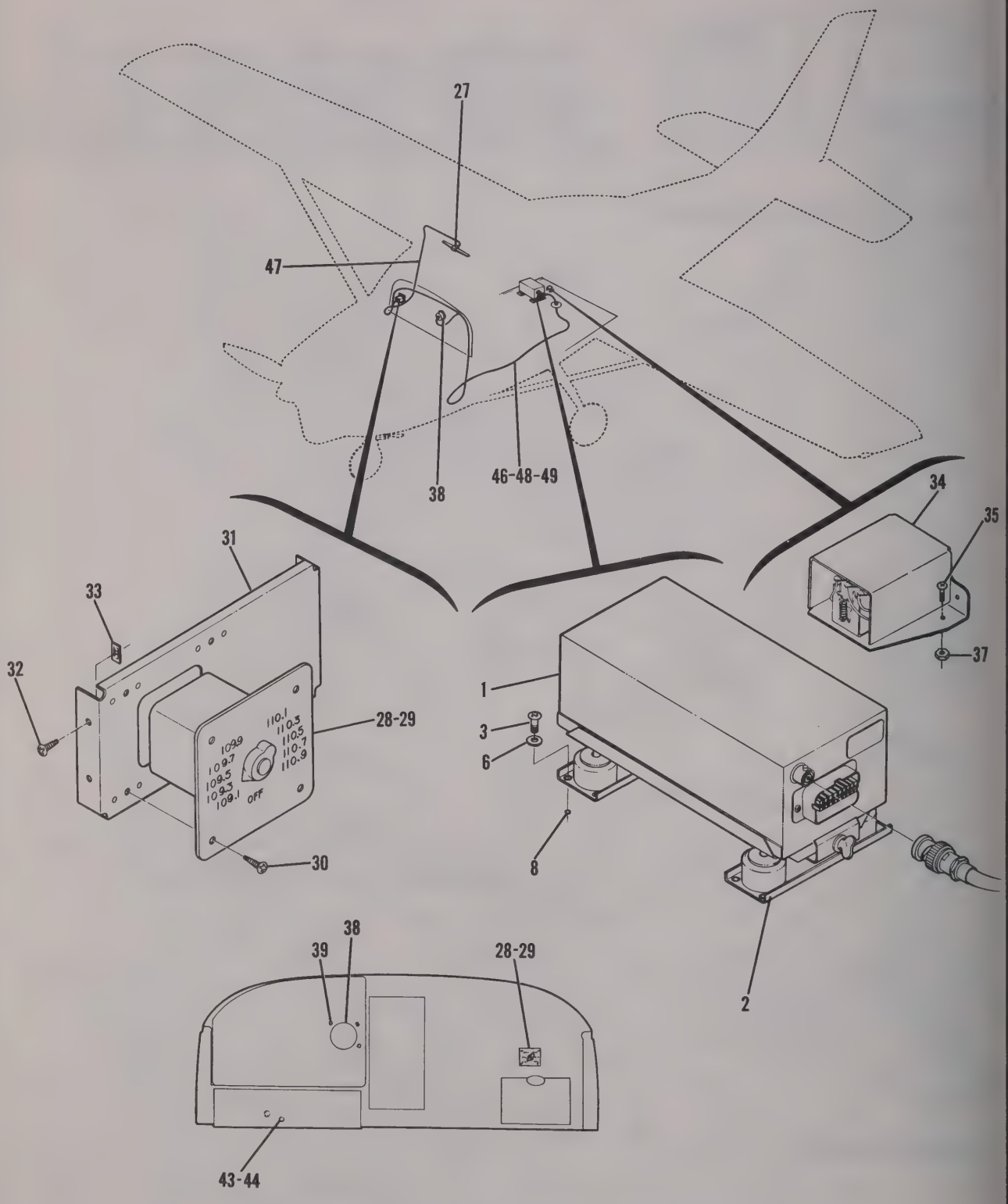


## 210 SERIAL 21058086 THRU 21058715

Figure 5-7. Narco (UGR-1A) Glide Slope Receiver Installation - Sheet 5

NARCO (URG-1) GLIDE SLOPE RECEIVER INSTALLATION

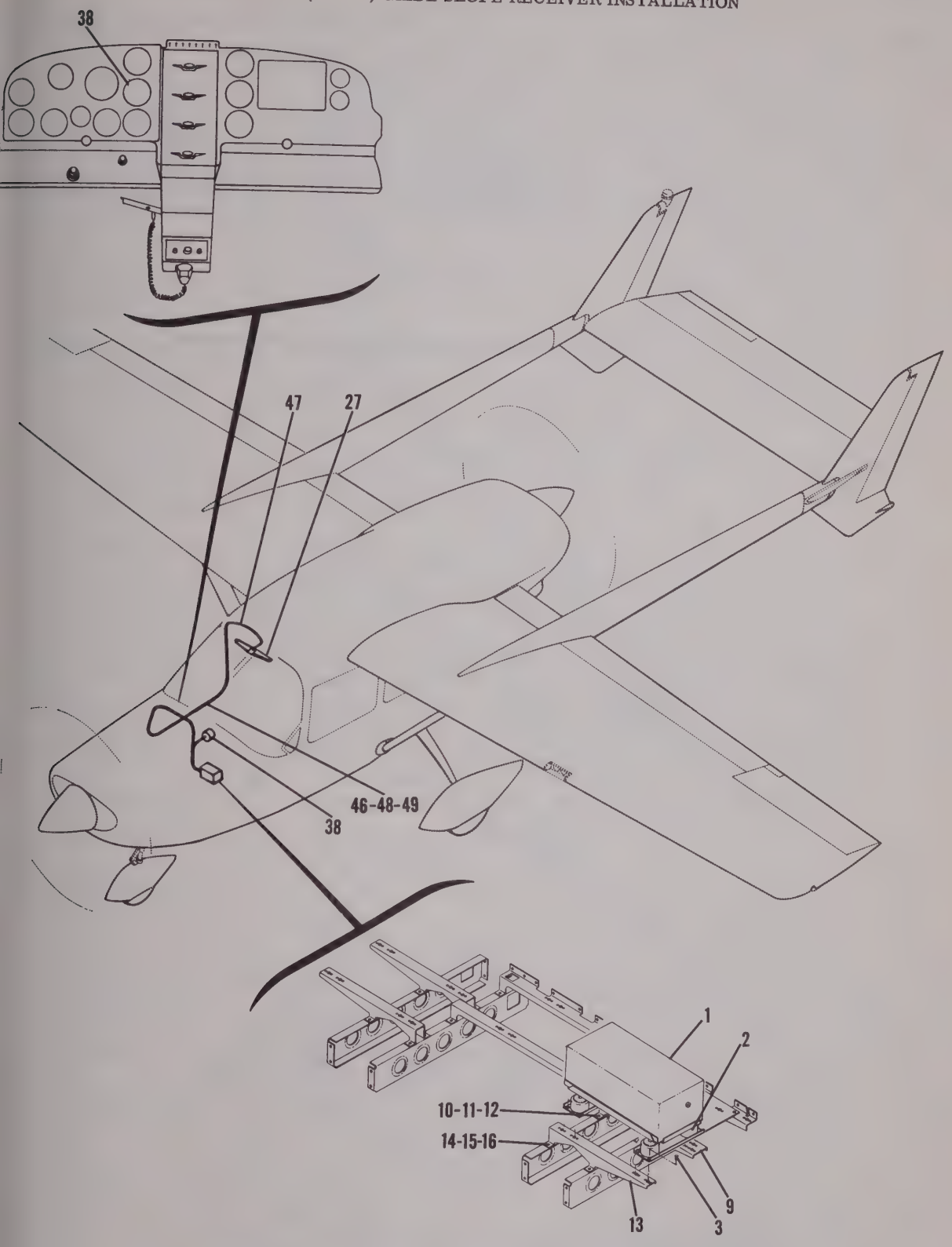


## 336 SERIAL 336-0001 THRU 336-0195

Figure 5-7. Narco (UGR-1A) Glide Slope Receiver Installation - Sheet 6

NARCO (URG-1) GLIDE SLOPE RECEIVER INSTALLATION

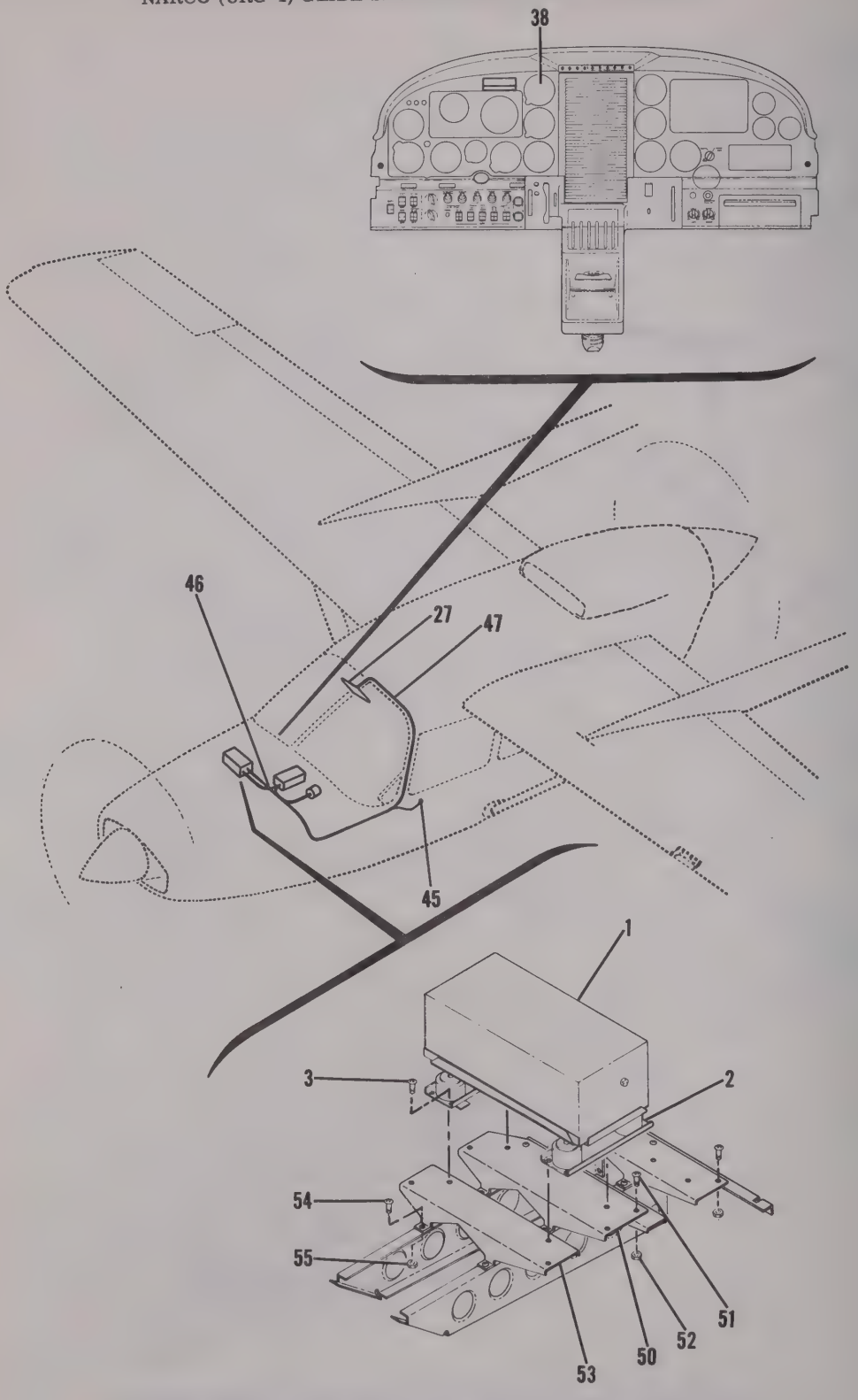


## 337 SERIAL 337-0001 THRU 337-0239

Figure 5-7. Narco (UGR-1A) Glide Slope Receiver Installation - Sheet 7

| FIGURE AND INDEX NO. | PART NUMBER | DESCRIPTION<br>1 2 3 4 5 6 7 | UNITS PER ASSY | USABLE ON CODE |
|---|---|---|---|---|
| 5-7- | | NARCO UGR-1A GLIDE SLOPE RADIO INSTALLATION - ALL MODELS EXCEPT 150 --------- | N/P | |
| - 1 | UGR-1A | RECEIVER - 10 CHANNEL OR 20 CHANNEL-----NARO ---------- | 1 | |
| | | ATTACHING PARTS | | |
| - 2 | 55269-102 | SHOCKMOUNT NARO ---------- | 1 | |
| - 3 | AN515-8R16 | SCREW 8 REQD ON 336 172, 182, 210 & 336 ONLY ---- | 4 | |
| - 4 | AN515-8R7 | SCREW 180 & 185 ONLY ---------- | 4 | |
| - 5 | AN515-8R8 | SCREW P206, U206 & 337 ONLY ---------- | 4 | |
| - 6 | AN936A8 | WASHER-----182 & 210 ---------- | 4 | |
| - 7 | MS20365-832C | NUT 180, 185, 205, 206, P206 & U206 ONLY ---------- | 4 | |
| - 8 | A8K75 | RIVNUT-----172, 182 & 210 ONLY---------- | 4 | |
| | | ---*--- | | |
| - 9 | 1470056-4 | SUPPORT ASSY 336 ONLY ---------- | 1 | |
| | | ATTACHING PARTS | | |
| - 10 | AN515-8R6 | SCREW ---------- | 4 | |
| - 11 | AN960-8 | WASHER---------- | 4 | |
| - 12 | MS20365-832C | NUT ---------- | 4 | |
| | | ---*--- | | |
| - 13 | 1470056-7 | SUPPORT ASSY 336 ONLY ---------- | 1 | |
| | | ATTACHING PARTS | | |
| - 14 | AN515-8R6 | SCREW ---------- | 4 | |
| - 15 | AN960-8 | WASHER---------- | 4 | |
| - 16 | MS20365-832C | NUT ---------- | 4 | |
| | | ---*--- | | |
| - 17 | 1270627-85 | SIDE ANGLE ASSY LH SIDE 205, 206, P206 & U206 ONLY ---- | 1 | |
| - 18 | 1270627-86 | SIDE ANGLE ASSY RH SIDE 205, 206, P206 & U206 ONLY ---- | 1 | |
| - 19 | 1270627-57 | ATTACH ANGLE 205, 206, P206 & U206 ONLY ---------- | 2 | |
| | | ATTACHING PARTS | | |
| - 20 | AN520-10R6 | SCREW ---------- | 4 | |
| | | ---*--- | | |
| - 21 | 1270631-1 | AUX RADIO SHELF THRU 1964 ONLY USED ONLY WHEN ---- | 1 | |
| | | STANDARD RADIO RACK IS FULL 205 & 206 ONLY | | |
| - 22 | 0770650-1 | AUX RADIO SHELF SUPPORT THRU 1964 ONLY USED ONLY | 1 | |
| | | WHEN STANDARD RADIO RACK IS FULL 205 & 206 ONLY | | |
| - 23 | 0770650-1 | AUX RADIO SHELF USED ONLY WHEN STANDARD RADIO RACK IS | 1 | |
| | | FULL THRU 1964 ONLY 182 ONLY | | |
| - 24 | 0770651-1 | SUPPORT - AUX RADIO SHELF ----THRU 1964 ONLY 182 ONLY | 1 | |
| - 25 | 0770651-2 | SUPPORT - AUX RADIO SHELF ----THRU 1964 ONLY 182 ONLY | 1 | |
| - 26 | 0770651-3 | SUPPORT - AUX RADIO SHELF ----THRU 1964 ONLY 182 ONLY | 1 | |
| - 27 | | GLIDE SLOPE ANT INSTALLATION SEE FIGURE 8-3 --------- | 1 | |
| - 28 | UGS-1 | CHANNEL SELECTOR 10 CHANNEL 182, 205, 206 & 210 ONLY | 1 | |
| | | THRU 1964 NOT USED WITH MARK XII RADIO | | |
| - 29 | UGS-1A | CHANNEL SELECTOR 20 CHANNEL 182, 205, 206 & 210 ONLY | 1 | |
| | | THRU 1964 NOT USED WITH MARK XII RADIO | | |
| | | ATTACHING PARTS | | |
| - 30 | S1022Z6-8 | SCREW ---------- | 4 | |
| | | ---*--- | | |
| - 31 | 0770652-1 | MOUNTING PLATE 182, 205, 206 & 210 ONLY THRU 1964 ---- | 1 | |
| | | NOT USED WITH MARK XII RADIO | | |
| | | ATTACHING PARTS | | |
| - 32 | S1021Z6-6 | SCREW ---------- | 4 | |
| - 33 | NAS446-2-3 | NUT ---------- | 4 | |
| | | ---*--- | | |
| - 34 | 0770668-1 | RELAY ASSY 182, 205, 206, P206, U206 & 210 ONLY ---- | 1 | |
| | | ATTACHING PARTS | | |
| - 35 | AN515-8R8 | SCREW ---------- | 2 | |
| | AN936A8 | WASHER-----205, 206, P206 & U206 ONLY ---------- | 2 | |
| - 36 | MS20365-832C | NUT 205, 206, P206 & U206 ONLY ---------- | 2 | |
| - 37 | A8K75 | RIVNUT-----182 & 210 ONLY ---------- | 2 | |
| | | ---*--- | | |
| - 38 | VOA-5 | INDICATOR - CONVERTER-----PART OF MARK V, MARK X OR ---- | REF | |
| | | MARK XII RADIO EQUIPMENT | | |
| | | ATTACHING PARTS | | |
| - 39 | AN515-B6R10 | SCREW ---------- | 3 | |
| | | ---*--- | | |

CONTINUED ON NEXT PAGE

| FIGURE AND INDEX NO. | PART NUMBER | DESCRIPTION<br>1 2 3 4 5 6 7 | UNITS PER ASSY | USAB ON COD |
|---|---|---|---|---|
| 5-7- 40 | 1213614-3 | COVER PLATE-----205, 206, P206, U206 & 210 ONLY ---------- | 1 | |
| - 41 | 1213614-4 | COVER PLATE-----205, 206, P206, U206 & 210 ONLY ---------- | 1 | |
| - 42 | NAS557-3A | GROMMET 205, 206, P206, U206 & 210 ONLY ---------- | 1 | |
| | NAS557-6A | GROMMET 205, 206, P206, U206 & 210 ONLY ---------- | 1 | |
| - 43 | S1232-5 | CIRCUIT BREAKER 182, 205, 206 & 210 THRU 1964 ONLY ---- | 1 | |
| - 44 | S1360-5 | CIRCUIT BREAKER ALL MODELS 1965 & ON EXCEPT 336 & 337 | 1 | |
| | S1360-3 | CIRCUIT BREAKER 336 ONLY ---------- | 1 | |
| - 45 | S1360-2 | CIRCUIT BREAKER 337 ONLY ---------- | 1 | |
| - 46 | | CABLE ASSY UGR-1A RECEIVER -20 CHANNEL- TO MARK XII---- | N/P | |
| | | TRANSCEIVER | | |
| | 41246-1 | CONNECTOR - UGR-1A RECEIVER END SUPPLIED WITH ---- | 1 | |
| | | GLIDESLOPE RECEIVER WHEN PURCHASED NARO | | |
| | 510 OHM 1/2W 5% | RESISTOR - LITTLE DEVIL - RECEIVER END-----OM ---------- | 1 | |
| | 1000 OHM 1/2W10% | RESISTOR - LITTLE DEVIL - RECEIVER END-----OM ---------- | 1 | |
| | EL-2053 | CONNECTOR KIT - MARK XII END-----SUPPLIED WITH MARK XII | 1 | |
| | | TRANSCEIVER WHEN PURCHASED | | |
| - 47 | | CABLE ASSY - RECEIVER TO GLIDE SLOPE ANT---------- | N/P | |
| | RG-58A/U | COAXIAL CABLE - BULK ITEM ---------- | A/R | |
| | UG-88C/U | PLUG - COAXIAL---------- | 1 | |
| | S1367-1-4 | TERMINAL ---------- | 2 | |
| - 48 | | CABLE ASSY - MARK X CABLE ASSY ONLY-----182, 205, 206, ---- | N/P | |
| | | 210 & 336 ONLY | | |
| | 41246-1 | CONNECTOR ASSY - RECEIVER END NARO---------- | 1 | |
| | 41247-101 | CONNECTOR ASSY - CONNECTS TO MARK X CABLE NARO ---- | 1 | |
| | 41247-102 | PLUG - MARK X CONNECTOR ----NARO ---------- | 1 | |
| | 41228-5 | HOOD - MARK X CONNECTOR ----NARO ---------- | 1 | |
| | 510 OHM 1/2W 5% | RESISTOR - LITTLE DEVIL - RECEIVER END-----OM ---------- | 1 | |
| | 1000 OHM 1/2W10% | RESISTOR - LITTLE DEVIL - RECEIVER END-----OM ---------- | 1 | |
| - 49 | | CABLE ASSY - MARK V CABLE ASSY ONLY---------- | N/P | |
| - 49 | 41246-1 | CONNECTOR ASSY - RECEIVER END NARO---------- | 1 | |
| | 41247-101 | CONNECTOR ASSY - RECEIVER END NARO---------- | 1 | |
| | 41228-5 | HOOD - MARK V CONNECTOR ---------- | 1 | |
| | 510 OHM 1/2W 5% | RESISTOR - LITTLE DEVIL - RECEIVER END-----OM ---------- | 1 | |
| | 1000 OHM 1/2W10% | RESISTOR - LITTLE DEVIL - RECEIVER END-----OM ---------- | 1 | |
| - 50 | 1513644-1 | SUPPORT 337 ONLY ---------- | 1 | |
| | | ATTACHING PARTS | | |
| - 51 | AN515-8R8 | SCREW ---------- | 3 | |
| - 52 | MS20365-832C | NUT ---------- | 2 | |
| | | ---*--- | | |
| - 53 | 1513645-1 | SUPPORT 337 ONLY ---------- | 1 | |
| | | ATTACHING PARTS | | |
| - 54 | AN515-8R8 | SCREW ---------- | 4 | |
| - 55 | MS20365-832C | NUT ---------- | 4 | |
| | | ---*--- | | |

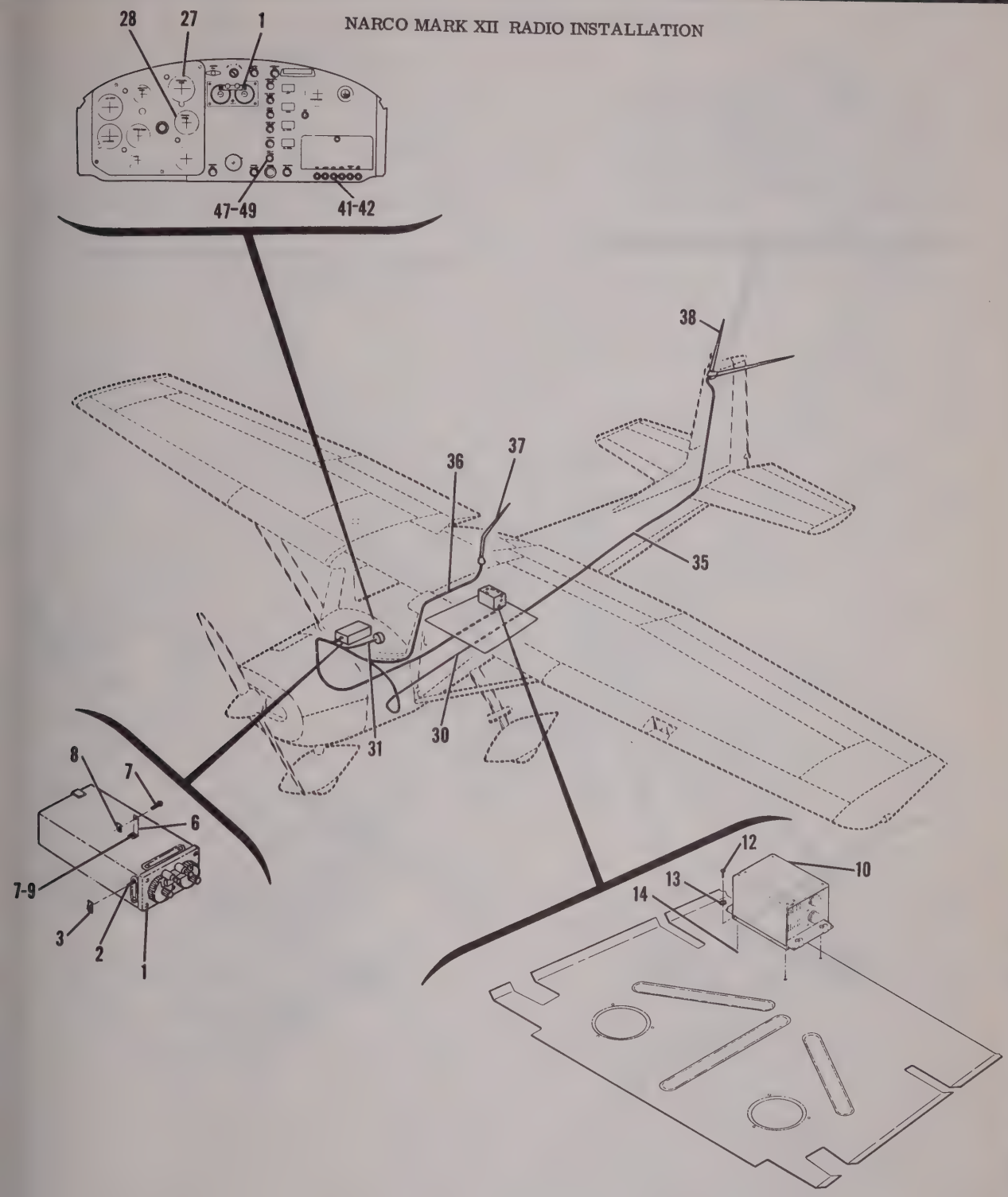


## 15[illegible] SERIAL 15060088 THRU 15061532

Figure 5-8. Narco Mark XII Radio Installation - Sheet 1

NARCO MARK XII RADIO INSTALLATION

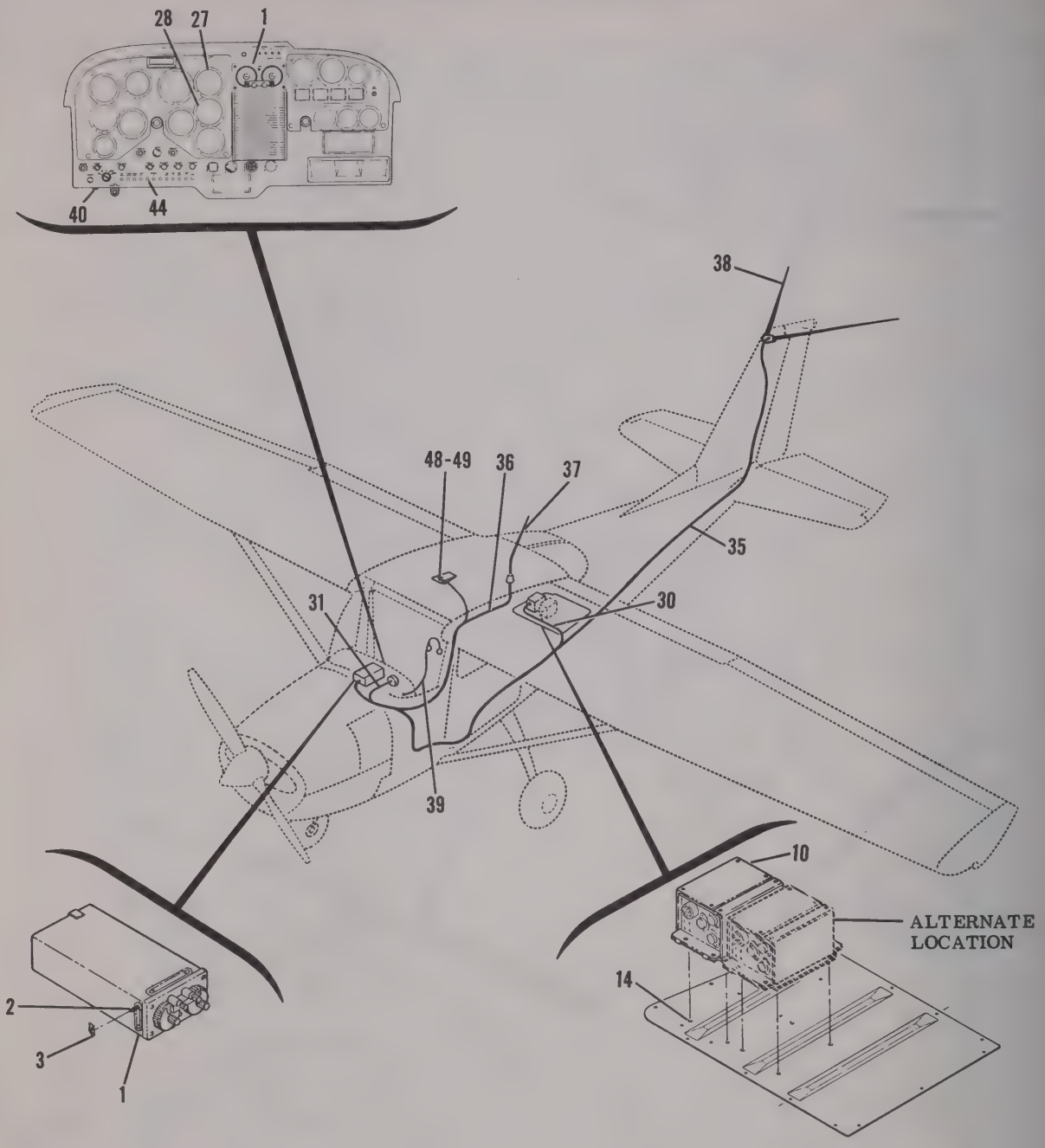


## 172 SERIAL 17250573 THRU 17253392

Figure 5-8. Narco Mark XII Radio Installation - Sheet 2

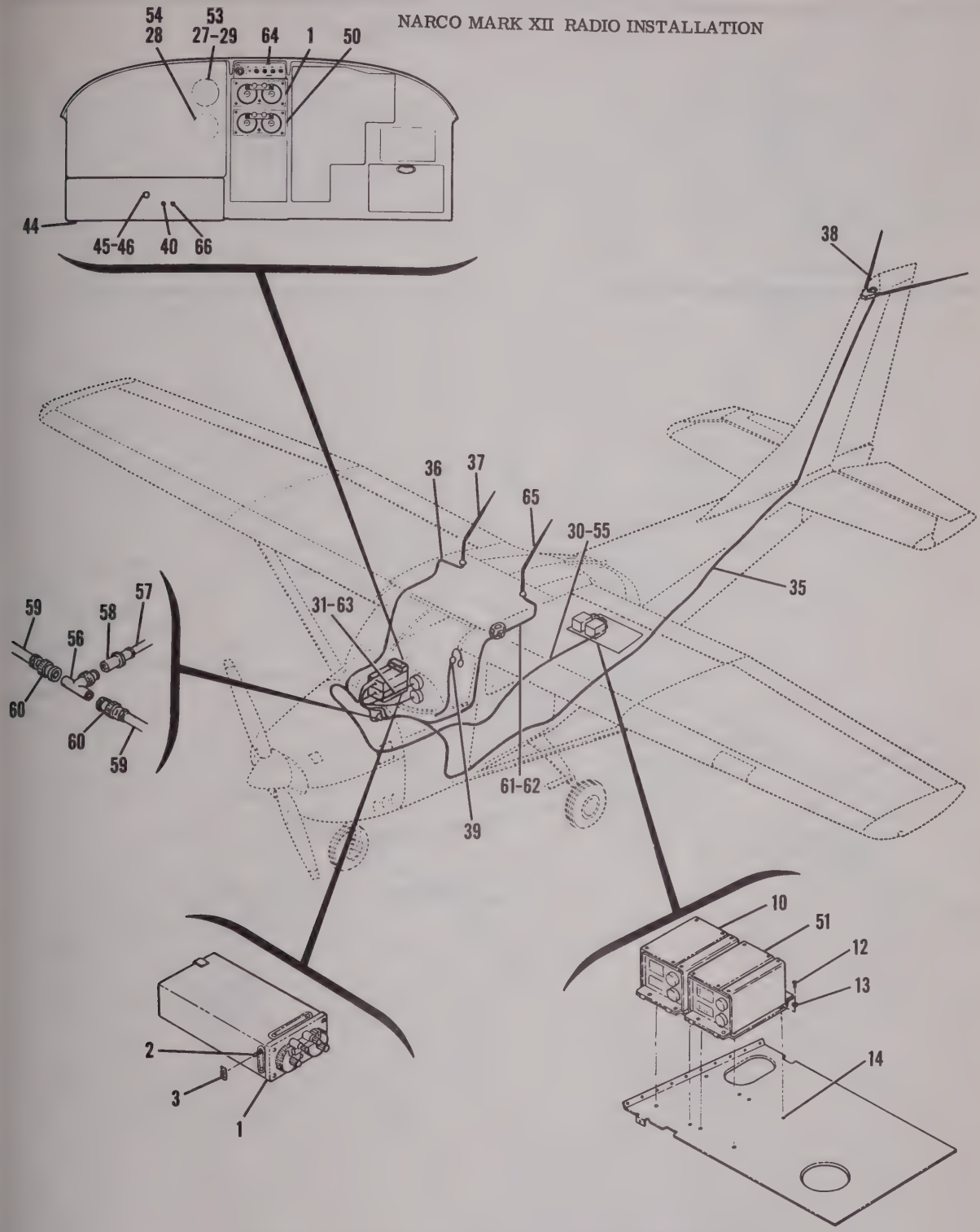


## 182 SERIAL 18255059 THRU 18256684

Figure 5-8. Narco Mark XII Radio Installation - Sheet 3

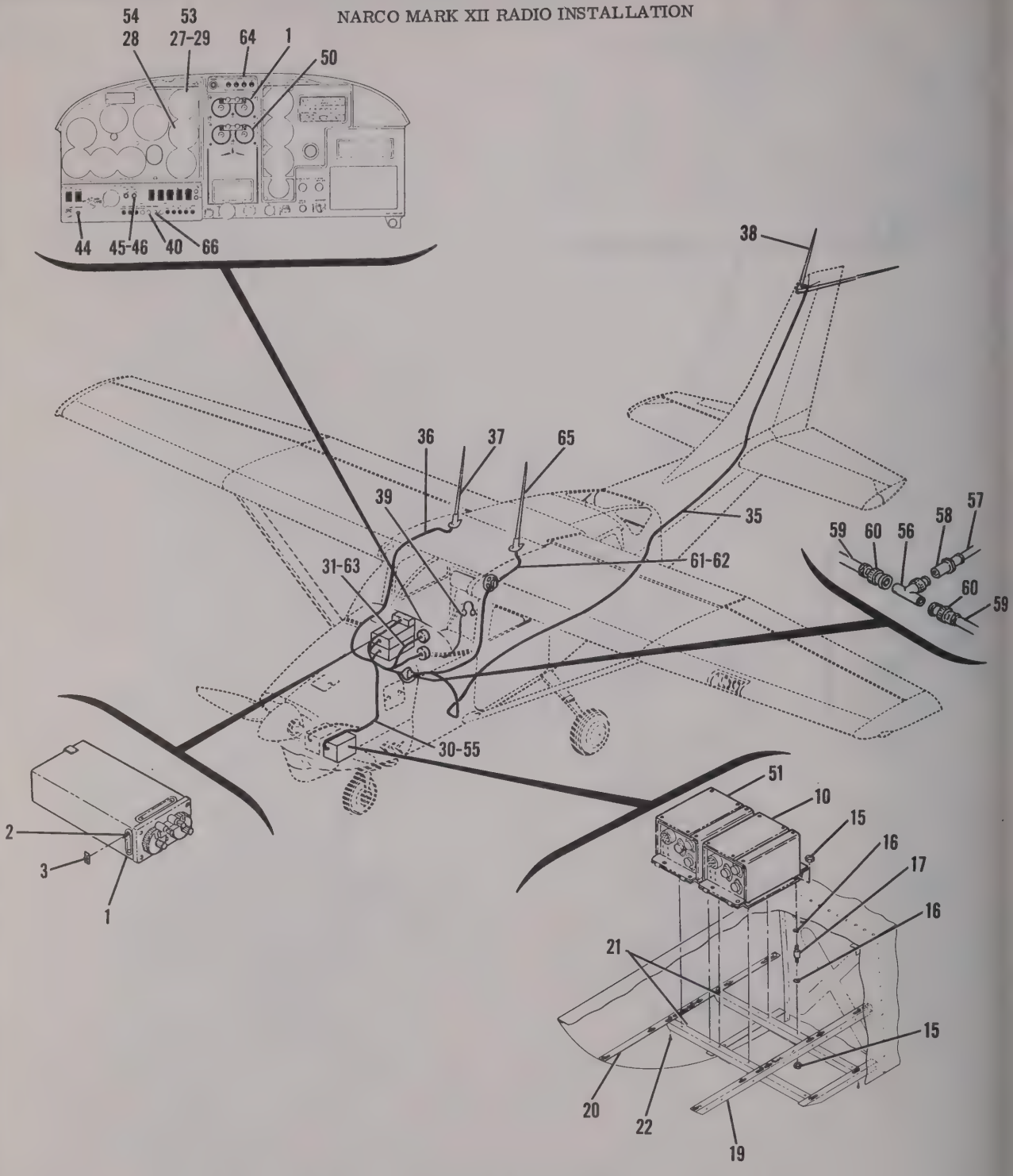


205 SERIAL 205-0481 THRU 205-0577
206 SERIAL 206-0001 THRU 206-0275
P206 SERIAL P206-0001 THRU P206-0160
U206 SERIAL U206-0276 THRU U206-0437

Figure 5-8. Narco Mark XII Radio Installation - Sheet 4

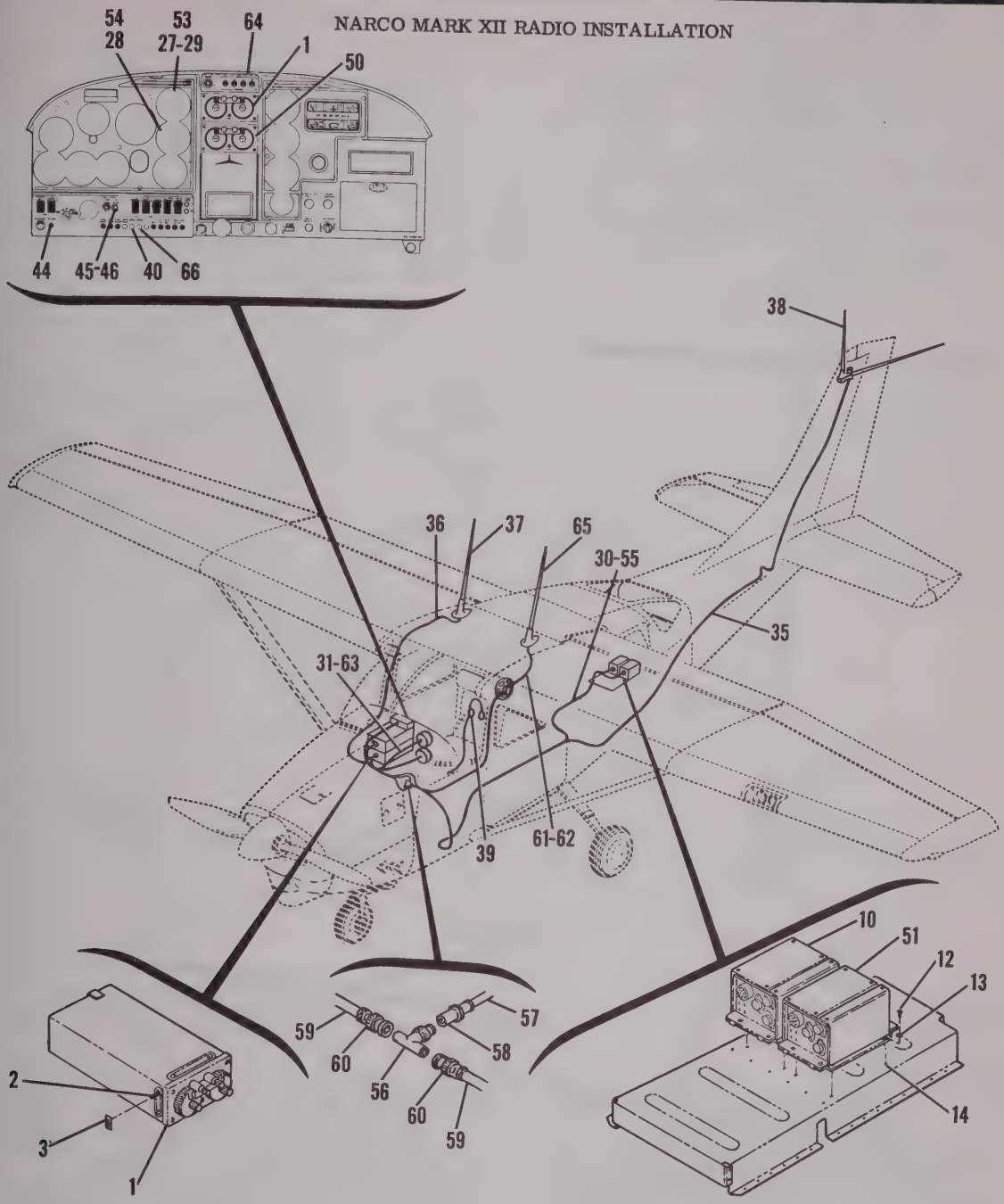


## 210 SERIAL 21058221 THRU 21058715

Figure 5-8. Narco Mark XII Radio Installation - Sheet 5

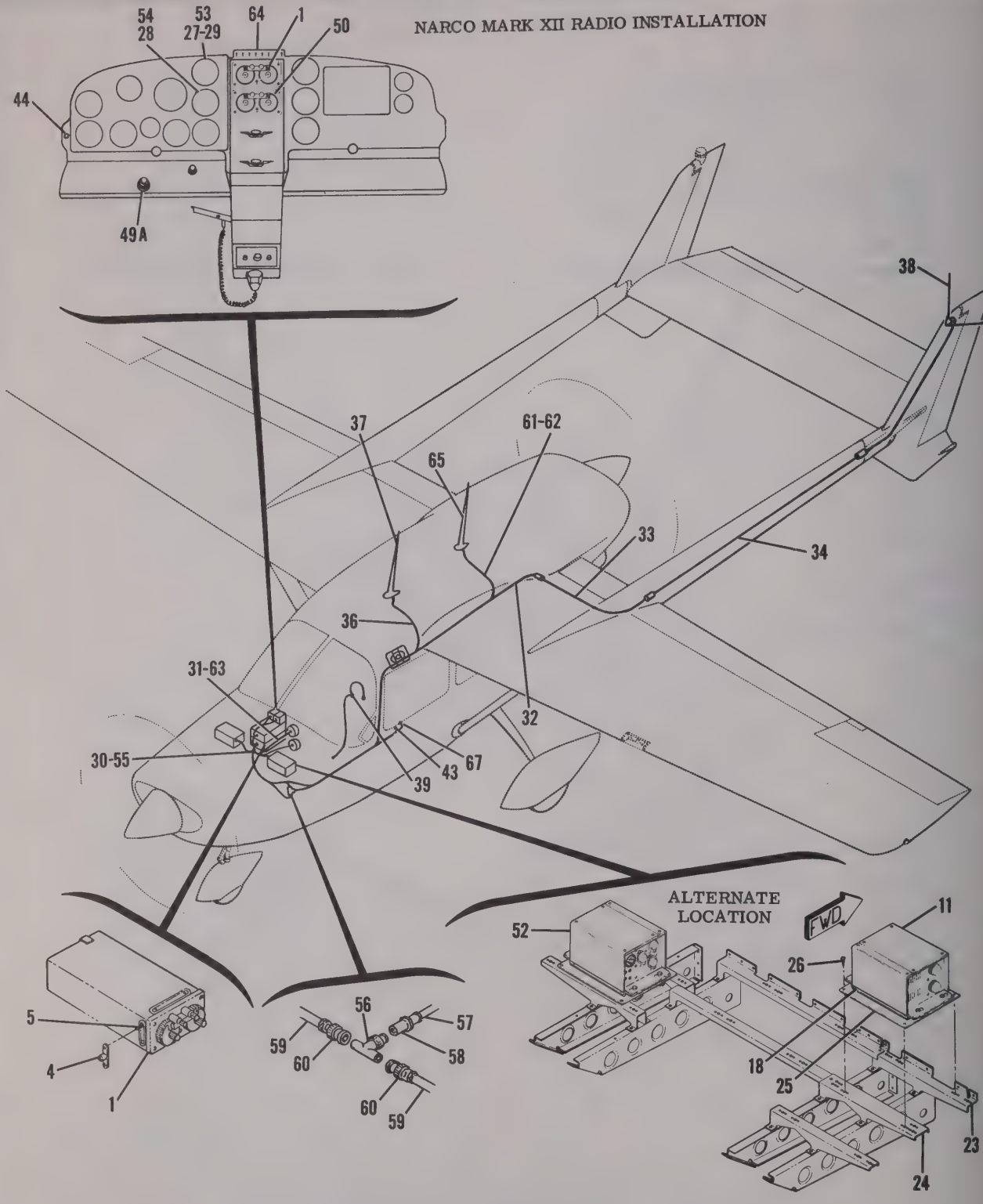


## 336 SERIAL 336-0001 THRU 336-0195

Figure 5-8. Narco Mark XII Radio Installation - Sheet 6

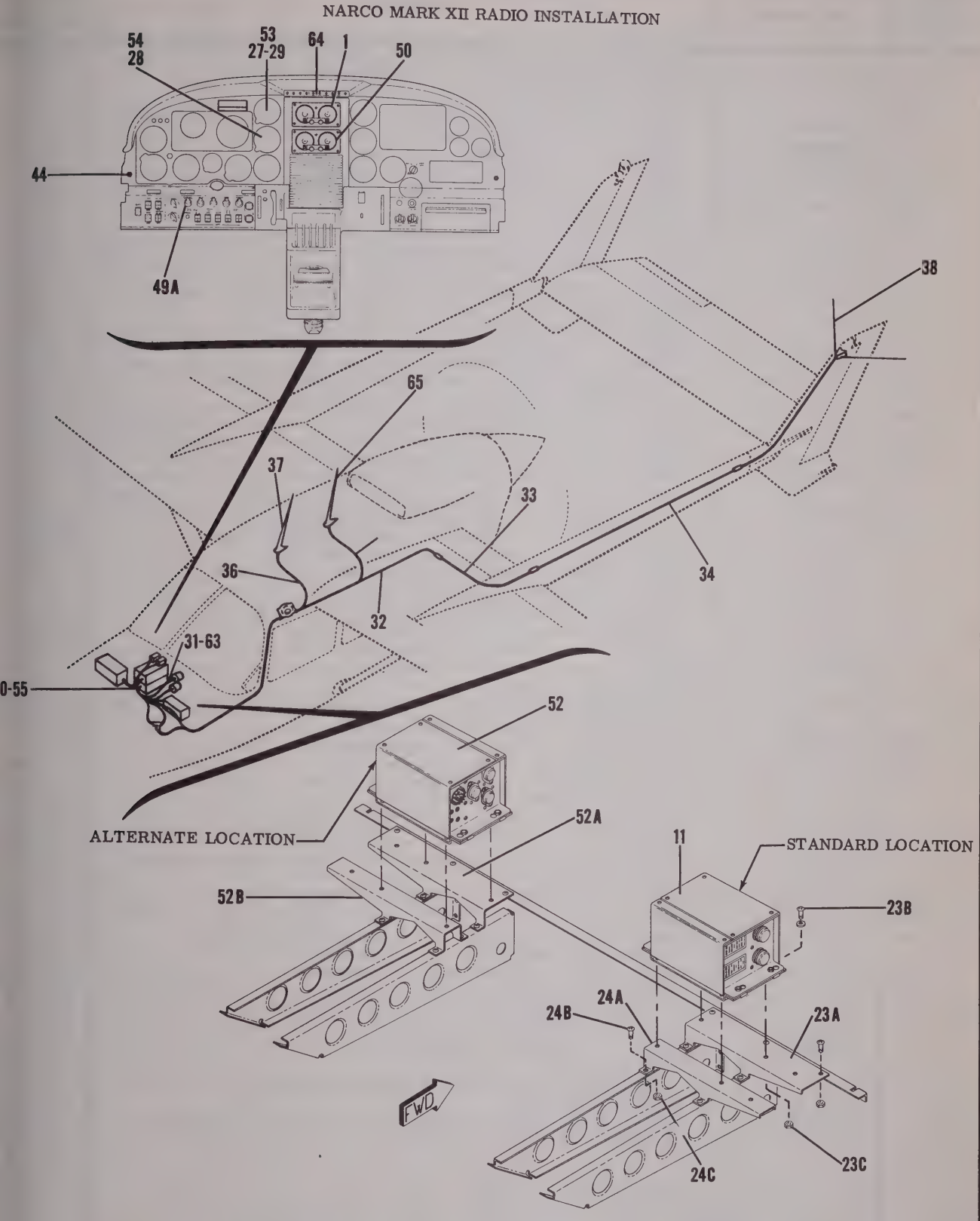


**337 SERIAL 337-0001 THRU 337-0239**

Figure 5-8. Narco Mark XII Radio Installation - Sheet 7

| FIGURE AND INDEX NO. | PART NUMBER | DESCRIPTION<br>1 2 3 4 5 6 7 | UNITS PER ASSY | USABLE ON CODE |
|---|---|---|---|---|
| 5-8- | | RADIO INSTALLATION-NARCO MARK XII WITH VOA-4, VOA-5 OR VOA-6 | NP | |
| - 1 | MARK XII | * TRANSCEIVER-90 CHANNEL ALL MODELS EXCEPT 336 & 337 ---- | 1 | |
| - 1 | MARK XII | * TRANSCEIVER-360 CHANNEL ALL MODELS ---------- | 1 | |
| | | ATTACHING PARTS | | |
| - 2 | S1021Z6-6 | SCREW ALL MODELS EXCEPT 336 & 337 ---------- | 4 | |
| | AN960-6L | WASHER-----ALL MODELS EXCEPT 336 & 337 ---------- | 4 | |
| - 3 | NAS446-2-3 | NUT ALL MODELS EXCEPT 336 & 337---------- | 4 | |
| - 4 | NAS697A06L | NUTPLATE 336 & 337 ONLY ---------- | 4 | |
| - 5 | AN515-6R6 | SCREW 336 & 337 ONLY ---------- | 1 | |
| - 6 | 0570004-1 | STRAP 150 ONLY ---------- | 1 | |
| | | ATTACHING PARTS | | |
| - 7 | S1021Z8-8 | SCREW ---------- | 1 | |
| - 8 | NAS446-4-3 | NUT TOP---------- | 1 | |
| - 9 | NAS395-14-3 | NUT BOTTOM ---------- | 1 | |
| | | ---*--- | | |
| - 10 | T12MP-12 | * POWER SUPPLY-12 VOLT SYSTEM ALL MODELS EXCEPT 336 & 337 | 1 | |
| - 11 | T24MP-12 | * POWER SUPPLY-24 VOLT SYSTEM 336 & 337 ONLY --------- | 1 | |
| | | ATTACHING PARTS | | |
| | 52085-101 | * MOUNT ---------- | 1 | |
| - 12 | AN515-8R16 | SCREW ALL MODELS EXCEPT 205, 206, P206, U206, 336 & 337 | 4 | |
| - 13 | AN936A8 | WASHER-----ALL MODELS EXCEPT 205, 206, P206, U206, 336 & 337 | 4 | |
| - 14 | A8K75 | RIVNUT-----150, 172, 182 & 210 ONLY---------- | 4 | |
| - 15 | AN340B8 | NUT 205, 206, P206 & U206 ONLY ---------- | 8 | |
| - 16 | AN936A8 | WASHER-----205, 206, P206 & U206 ONLY ---------- | 8 | |
| - 17 | 0411059-3 | SHOCK MOUNT-----205, 206, P206 & U206 ONLY ---------- | 4 | |
| - 18 | AN520-10R6 | SCREW 336 & 337 ONLY ---------- | 4 | |
| | | ---*--- | | |
| - 19 | 1270627-85 | SIDE ANGLE ASSY-LH SIDE-STANDARD EQUIPMENT ---------- | 1 | |
| | | ON AIRCRAFT 205, 206, P206 & U206 ONLY | | |
| - 20 | 1270627-86 | SIDE ANGLE ASSY-RH SIDE-STANDARD EQUIPMENT ---------- | 1 | |
| | | ON AIRCRAFT 205, 206, P206 & U206 ONLY | | |
| - 21 | 1270627-56 | ATTACH ANGLE 205, 206, P206 & U206 ONLY ---------- | 2 | |
| | | ATTACHING PARTS | | |
| - 22 | AN520-10R6 | SCREW ---------- | 4 | |
| - 23 | 1470056-1 | SUPPORT ASSY 336 ONLY ---------- | 1 | |
| | | ATTACHING PARTS | | |
| | AN515-8R6 | SCREW ---------- | 7 | |
| | NAS679A08 | NUT ---------- | 7 | |
| | | ---*--- | | |
| -23A | 1513629-1 | SUPPORT ASSY 337 ONLY ---------- | 1 | |
| | | ATTACHING PARTS | | |
| -23B | AN515-8R8 | SCREW ---------- | 5 | |
| -23C | NAS679A08 | NUT ---------- | 5 | |
| | | ---*--- | | |
| - 24 | 1470056-4 | SUPPORT ASSY 336 ONLY ---------- | 1 | |
| | | ATTACHING PARTS | | |
| | AN515-8R6 | SCREW ---------- | 4 | |
| | NAS679A08 | NUT ---------- | 4 | |
| | | ---*--- | | |
| -24A | 1513635-1 | SUPPORT ASSY 337 ONLY ---------- | 1 | |
| | | ATTACHING PARTS | | |
| -24B | AN515-8R8 | SCREW ---------- | 4 | |
| -24C | NAS679A08 | NUT ---------- | 4 | |
| | | ---*--- | | |
| - 25 | 1470056-16 | SUPPORT ASSY 336 ONLY ---------- | 1 | |
| | | ATTACHING PARTS | | |
| - 26 | AN520-10R6 | SCREW ---------- | 4 | |
| | | ---*--- | | |
| - 27 | VOA-4 | * CONVERTER-INDICATOR ---------- | 1 | |
| | | ATTACHING PARTS | | |
| | AN515B6R10 | SCREW ALL MODELS EXCEPT 336 ---------- | 3 | |
| | AN507B6R12 | SCREW 336 ONLY ---------- | 3 | |
| | | ---*--- | | |
| - 28 | VOA-6 | * CONVERTER-INDICATOR ---------- | 1 | |
| | | ATTACHING PARTS | | |
| | AN515B6R10 | SCREW ALL MODELS EXCEPT 336 ---------- | 4 | |
| | AN507B6R12 | SCREW 336 ONLY ---------- | 4 | |
| | | ---*--- | | |

CONTINUED ON NEXT PAGE

| FIGURE AND INDEX NO. | PART NUMBER | DESCRIPTION<br>1 2 3 4 5 6 7 | UNITS PER ASSY | USABLE ON CODE |
|---|---|---|---|---|
| 5-8- 29 | VOA-5 | * CONVERTER-INDICATOR USED ONLY WHEN GLIDESLOPE IS INSTALLED ALL MODELS EXCEPT 150 & 172 | 1 | |
| | | ATTACHING PARTS | | |
| | AN515B6R10 | SCREW ALL MODELS EXCEPT 336 & 337 | 3 | |
| | AN507B6R12 | SCREW 336 & 337 ONLY | 3 | |
| | | ---*--- | | |
| - 30 | | CABLE ASSY-TRANSCEIVER TO POWER SUPPLY-VOA-4,VOA-5 OR VOA-6 | NP | |
| | EL-2052 | * CONNECTOR KIT | 1 | |
| | K-41271-1 | * RECEPTACLE-16 PIN | 2 | |
| | K-41182-2 | * CAP-PLUG | 2 | |
| - 31 | | CABLE ASSY-TRANSCEIVER TO VOA-4 OR VOA-5 INDICATOR | NP | |
| | K-41116-1 | * PLUG-CONNECTS TO TRANSCEIVER | 1 | |
| | MS3106A-20-27S | * PLUG-CONNECTS TO VOA-4 OR VOA-5 | 1 | |
| | MS3057-12 | * CLAMP-CONNECTS TO VOA-4 OR VOA-5 | 1 | |
| - 32 | | CABLE ASSY-TRANSCEIVER TO OMNI CABLE CONNECTION AT WING ROOT-SUPPLIED ON AIRCRAFT AS STANDARD EQUIPMENT | NP | |
| | | 336 & 337 ONLY | | |
| | RG-58A/U | COAXIAL CABLE-BULK ITEM | A/R | |
| | 13B | PLUG-MOTOROLA TYPE-REQD FOR ABOVE CABLE | 1 | |
| | UG-88C/U | PLUG-COAXIAL | 1 | |
| - 33 | | CABLE ASSY-WING ROOT TO BOOM CONNECTION-SUPPLIED ON AIRCRAFT AS STANDARD EQUIPMENT 336 & 337 ONLY | N/P | |
| | RG-58A/U | COAXIAL CABLE-BULK ITEM | A/R | |
| | UG-88C/U | PLUG-COAXIAL | 1 | |
| | UG-89/U | RECEPTACLE-COAXIAL | 1 | |
| - 34 | | CABLE ASSY-BOOM CONNECTION TO BALUN STUB 336 & 337 ONLY | NP | |
| | RG-58A/U | COAXIAL CABLE-BULK ITEM | A/R | |
| | UG-89/U | RECEPTACLE-COAXIAL | 1 | |
| | UG-88C/U | PLUG-COAXIAL | 1 | |
| - 35 | | CABLE ASSY-TRANSCEIVER TO BALUN STUB ALL MODELS EXCEPT 336 & 337 | N/P | |
| | RG-58A/U | COAXIAL CABLE-BULK ITEM | A/R | |
| | 13B | PLUG-MOTOROLA TYPE-CONNECTS TO TRANSCEIVER | 1 | |
| | UG-291/U | JACK-COAXIAL-CONNECTS TO BALUN STUB 150, 172 ONLY | 1 | |
| | UG-88C/U | PLUG-COAXIAL-CONNECTS TO BALUN STUB 182, 205, 206 & 210 ONLY | 1 | |
| - 36 | | CABLE ASSY-TRANSCEIVER TO UHF ANT | N/P | |
| | RG-58A/U | COAXIAL CABLE-BULK ITEM | A/R | |
| | 13E | PLUG-RCA PHONO TYPE | 1 | |
| | UG-913/U | PLUG-COAXIAL-RIGHT ANGLE 182, 205, 206 & 210 ONLY | 1 | |
| | UG-88C/U | PLUG-COAXIAL 150, 172, 336 & 337 ONLY | | |
| - 37 | | VHF ANTENNA INSTALLATION SEE FIGURE 8-1 | 1 | |
| - 38 | | OMNI ANTENNA INSTALLATION SEE FIGURE 8-2 | 1 | |
| | | MICROPHONE INSTALLATION SEE FIGURE 9-4 | 1 | |
| | | SPEAKER INSTALLATION SEE FIGURE 9-3 | 1 | |
| - 39 | | HEADSET INSTALLATION SEE FIGURE 9-5 | 1 | |
| - 40 | S1360-10 | CIRCUIT BREAKER 172, 182, 205, 206, P206, U206 & 210 ONLY | 1 | |
| - 41 | S1090-2 | FUSE ASSY 150 ONLY | 1 | |
| | S1090-9 | FUSE BODY 150 ONLY | 1 | |
| | S1090-11 | CAP 150 ONLY | 1 | |
| - 42 | S1091-5 | FUSE 150 ONLY | 1 | |
| - 43 | S1360-5 | CIRCUIT BREAKER 336 & 337 ONLY | 1 | |
| - 44 | S1103-1 | PHONE JACK | A/R | |
| | | RADIO NOISE FILTERS SEE FIGURE 10-5 | A/R | |
| - 45 | R-12 1/2-75-RS34 | RHEOSTAT 182, 205, 206, P206, U206 & 210 ONLY | 1 | |
| - 46 | S1163-2 | KNOB-RHEOSTAT 182, 205, 206, P206, U206 & 210 ONLY | 1 | |
| - 47 | 0413126-6 | RHEOSTAT 150 ONLY | 1 | |
| - 48 | 0413126-9 | RHEOSTAT 172 ONLY | 1 | |
| - 49 | 0413126-3 | KNOB-RHEOSTAT 150, 172 ONLY | 1 | |
| -49A | | DROPPING RESISTOR-FLT INST & RADIO DIAL LT 336 & 337 SEE FIGURE 10-2 | 1 | |

CONTINUED ON NEXT PAGE

| FIGURE AND INDEX NO. | PART NUMBER | DESCRIPTION<br>1 2 3 4 5 6 7 | UNITS PER ASSY | USABLE ON CODE |
|---|---|---|---|---|
| 5-8- | | DUAL MARK 12 WITH DUAL VOA-4 OR VOA-6 INSTALLATION THE FOLLOWING PARTS ARE REQUIRED IN ADDITION TO THOSE REQUIRED FOR A SINGLE RADIO INSTALLATION. ITEMS 57 & 59 REPLACE ITEMS 32 & 35 WHEN DUAL RADIOS ARE INSTALLED MODELS 182, 205, 206, P206, U206, 210, 336 & 337 ONLY | | |
| - 50 | MARK XII | * TRANSCEIVER-90 CHANNEL ALL MODELS EXCEPT 336 & 337 ---- | 1 | |
| - 50 | MARK XII | * TRANSCEIVER-360 CHANNEL ALL MODELS ---------- | 1 | |
| | | ATTACHING PARTS | | |
| | S1021Z6-6 | SCREW ALL MODELS EXCEPT 336 & 337 ---------- | 4 | |
| | AN960-6L | WASHER-----ALL MODELS EXCEPT 336 & 337 ---------- | 4 | |
| | NAS446-2-3 | NUT ALL MODELS EXCEPT 336 & 337---------- | 4 | |
| | NAS697A06L | NUTPLATE 336 & 337 ONLY ---------- | 4 | |
| | AN515-6R6 | SCREW 336 & 337 ONLY ---------- | 4 | |
| | | ---*--- | | |
| - 51 | T12MP-12 | * POWER SUPPLY- 12 VOLT SYSTEM ALL MODELS EXCEPT 336 & 337 | 1 | |
| - 52 | T24MP-12 | * POWER SUPPLY- 24 VOLT SYSTEM 336 & 337 ONLY ---------- | 1 | |
| | | ATTACHING PARTS | | |
| | 52085-101 | * MOUNT ---------- | 1 | |
| | AN515-8R16 | SCREW ALL MODELS EXCEPT 205, 206, P206, U206 & 336 ---- | 4 | |
| | AN936A8 | WASHER-----ALL MODELS EXCEPT 205, 206, P206, U206 & 336---- | 4 | |
| | A8K75 | RIVNUT-----182 & 210 ONLY ---------- | 4 | |
| | AN340B8 | NUT 205 & 206 ONLY ---------- | 4 | |
| | AN936A8 | WASHER-----205, 206, P206 & U206 ONLY ---------- | 8 | |
| | 0411059-3 | SHOCKMOUNT 205, 206, P206 & U206 ONLY ---------- | 4 | |
| | AN520-10R6 | SCREW 336 ONLY ---------- | 4 | |
| | AN515-8R8 | SCREW 337 ONLY ---------- | 4 | |
| | 1470056-9 | SUPPORT ASSY 336 ONLY ---------- | 2 | |
| | | ATTACHING PARTS | | |
| | AN515-8R6 | SCREW ---------- | 8 | |
| | NAS679A08 | NUT ---------- | 8 | |
| | | ---*--- | | |
| -52A | 1513629-2 | SUPPORT ASSY ---------- | 1 | |
| | | ATTACHING PARTS | | |
| | AN515-8R8 | SCREW ---------- | 5 | |
| | NAS679A08 | NUT ---------- | 5 | |
| | | ---*--- | | |
| | 1470056-16 | SUPPORT ASSY 336 ONLY ---------- | 1 | |
| | | ATTACHING PARTS | | |
| | AN520-10R6 | SCREW ---------- | 4 | |
| | | ---*--- | | |
| -52B | 1513635-1 | SUPPORT ASSY ---------- | 1 | |
| | | ATTACHING PARTS | | |
| | AN515-8R8 | SCREW ---------- | 4 | |
| | NAS679A08 | NUT ---------- | 4 | |
| | | ---*--- | | |
| - 53 | VOA-4 | * CONVERTER-INDICATOR ---------- | 1 | |
| | | ATTACHING PARTS | | |
| | AN515B6R10 | SCREW ALL MODELS EXCEPT 336 & 337 ---------- | 3 | |
| | AN507B6R12 | SCREW 336 & 337 ONLY ---------- | 3 | |
| | | ---*--- | | |
| - 54 | VOA-6 | * CONVERTER-INDICATOR ---------- | 1 | |
| | | ATTACHING PARTS | | |
| | AN515B6R10 | SCREW ALL MODELS EXCEPT 336 & 337 ---------- | 4 | |
| | AN507B6R12 | SCREW 336 & 337 ONLY ---------- | 4 | |
| | | ---*--- | | |
| - 55 | | CABLE ASSY-TRANSCEIVER TO POWER SUPPLY-VOA-4 3R VOA-6 ---- | N/P | |
| | EL-2052 | * CONNECTOR KIT ---------- | 1 | |
| | K-41271-1 | * RECEPTACLE- 16 PIN ---------- | 2 | |
| | K-41182-2 | * CAP-PLUG ---------- | 2 | |
| - 56 | UG-274/U | TEE ADAPTER---------- | 1 | |
| | | CABLE ASSY-TEE ADAPTER TO BALUN STUB-REPLACES ITEM 35 ---- WHEN DUAL RADIOS ARE INSTALLED ALL MODELS EXCEPT 336 & 337 | N/P | |
| - 57 | RG-58A/U | COAXIAL CABLE ---------- | A/R | |
| - 58 | UG-88C/U | PLUG-COAXIAL 2 REQD ON 336 ---------- | 1 | |
| | UG-89/U | PLUG-COAXIAL 182, 205, 206, P206, U206 & 210 ONLY---- | 1 | |

CONTINUED ON NEXT PAGE

| FIGURE AND INDEX NO. | PART NUMBER | DESCRIPTION<br>1 2 3 4 5 6 7 | UNITS PER ASSY | USABLE ON CODE |
|---|---|---|---|---|
| 5-8- | | CABLE ASSY-TRANSCEIVER TO TEE ADAPTER ---------- | N/P | |
| - 59 | RG-58A/U | COAXIAL CABLE-TWO 33 INCH LONG CABLES REQD ON 182, 205, 206, P206, U206 & 210 ONLY TWO 22.5 INCH LONG CABLES REQD ON 336 & 337 ONLY - BULK ITEM | A/R | |
| | 13B | PLUG-MOTOROLA TYPE ---------- | 1 | |
| - 60 | UG-88C/U | PLUG-COAXIAL ---------- | 1 | |
| - 61 | | CABLE ASSY-TRANSCEIVER TO VHF SPIKE ANT- USED ON 90 CHANNEL RADIOS ONLY ALL MODELS EXCEPT 336 & 337 ---- | N/P | |
| | RG-58A/U | COAXIAL CABLE-BULK ITEM ---------- | A/R | |
| | 13E | PLUG-RCA PHONO TYPE---------- | 1 | |
| | S1367-1-10 | TERMINAL ---------- | 1 | |
| | S1367-2-8 | TERMINAL ---------- | 1 | |
| - 62 | | CABLE ASY-TRANSCEIVER TO BROADBAND ANT- USED ON 360 CHANNEL RADIOS ONLY ---- | N/P | |
| | RG-58A/U | COAXIAL CABLE-BULK ITEM ---------- | A/R | |
| | 13E | PLUG-RCA PHONO TYPE---------- | 1 | |
| | UG-913/U | PLUG-COAXIAL 182, 205, 206 & 210 ONLY ---------- | 1 | |
| | UG-88C/U | PLUG-COAXIAL 336 & 337 ONLY ---------- | 1 | |
| | | ---*--- | | |
| - 63 | | CABLE ASSY-TRANSCEIVER TO VOA-4 OR VOA-5 INDICATOR--------- | N/P | |
| | K-41116-1 | PLUG-CONNECTS TO TRANSCEIVER---------- | 1 | |
| | MS3106A-20-27S | PLUG-CONNECTS TO VOA-4 OR VOA-5 ---------- | 1 | |
| | MS3057-12 | CLAMP-CONNECTS TO VOA-4 OR VOA-5 ---------- | 1 | |
| - 64 | | TRANSMITTER SELECTOR SWITCH & AUDIO AMPLIFIER-----SEE FIGURE 9-1 ---- | 1 | |
| - 65 | | VHF ANTENNA INSTALLATION SEE FIGURE 8-1 ---------- 90 CHANNEL INSTALLATIONS | 1 | |
| | | RADIO COOLING SEE FIGURE 10-1 ---------- | 1 | |
| - 66 | S1360-10 | CIRCUIT BREAKER 182, 205, 206 & 210 ONLY ---------- | 1 | |
| - 67 | S1360-5 | CIRCUIT BREAKER 336 & 337 ONLY ---------- | 1 | |

* ITEMS MARKED WITH ASTERISK SUPPLIED WHEN COMPLETE RADIO IS PURCHASED.

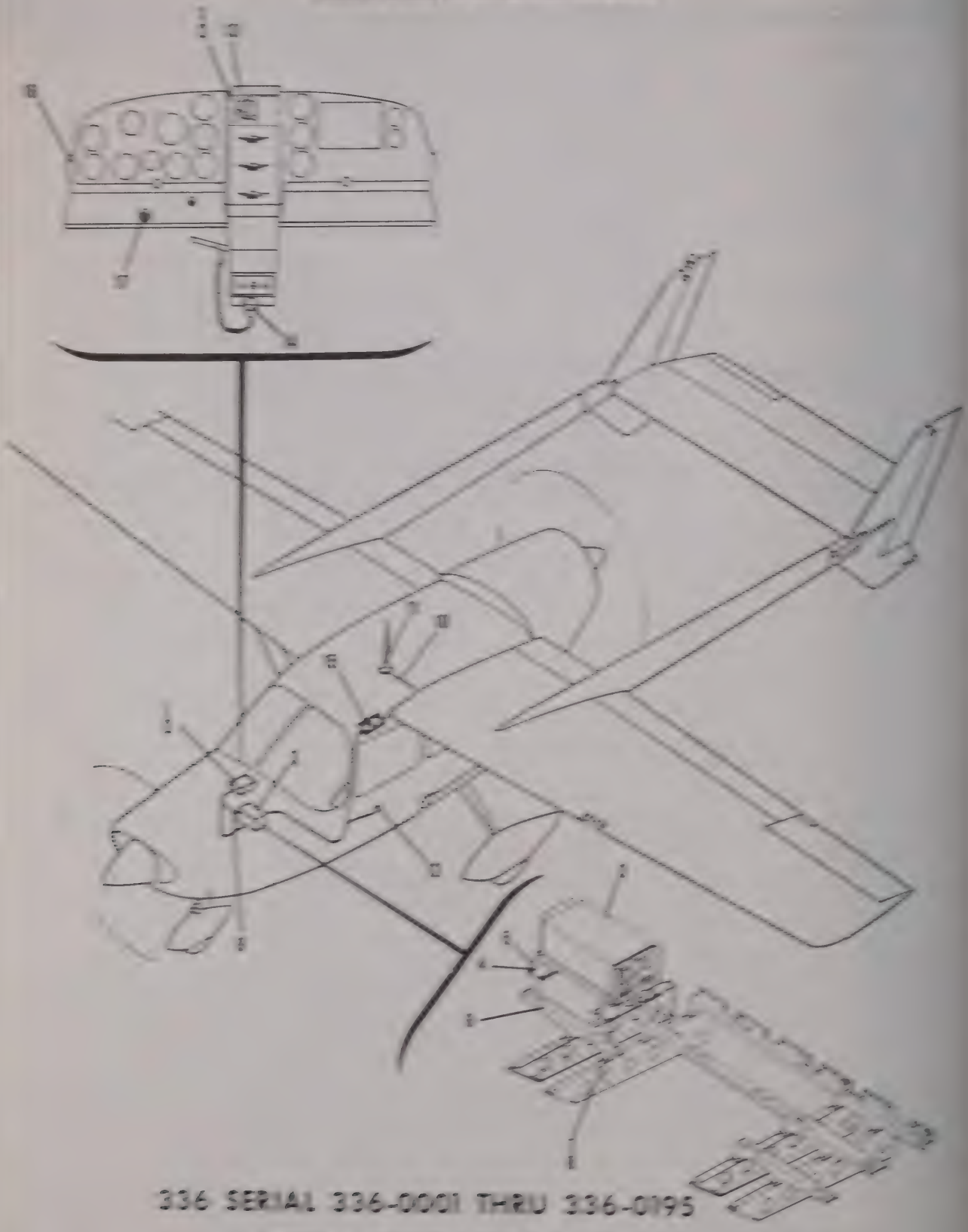


Figure 6-4. Narco Mark VII Radio Installation

| FIGURE AND INDEX NO. | PART NUMBER | DESCRIPTION 1 2 3 4 5 6 7 | UNITS PER ASSY | USABLE ON CODE |
|---|---|---|---|---|
| 5-[illegible]- | | RADIO INSTALLATION-NARCO [illegible] 310 ONLY | REF | |
| -1 | NARCO [illegible] | * TRANSCEIVER | 1 | |
| | | ATTACHING PARTS | | |
| -2 | 1470083-1 | PANEL ASSY | 1 | |
| | 1470083-2 | PANEL | 1 | |
| | 1470083-3 | ANGLE- R.H. | 1 | |
| | 1470083-4 | ANGLE- L.H. | 1 | |
| | AN507-[illegible] | SCREW | [illegible] | |
| | MS20365-[illegible] | NUT | [illegible] | |
| | AN515-[illegible] | SCREW | 4 | |
| | [illegible] | NUTPLATE | 4 | |
| | | -----*----- | | |
| -3 | [illegible] | * POWER SUPPLY | 1 | |
| | | ATTACHING PARTS | | |
| -4 | [illegible] | SHOCKMOUNT | 1 | |
| -5 | AN526-[illegible] | SCREW | [illegible] | |
| | | -----*----- | | |
| -6 | 1470056-[illegible] | SUPPORT ASSY | 2 | |
| | | ATTACHING PARTS | | |
| -7 | AN515-[illegible] | SCREW | [illegible] | |
| -8 | [illegible] | NUT | [illegible] | |
| | | -----*----- | | |
| -9 | | CABLE ASSY-MAIN CABLE ASSY | REF | |
| | [illegible] | * CABLE ASSY-TRANSCEIVER TO POWER UNIT | 1 | |
| | [illegible] | * PLUG-CONNECTS TO POWER UNIT | 1 | |
| -10 | | CABLE ASSY-TRANSCEIVER TO VHF ANT | [illegible] | |
| | RG-58A/U | COAXIAL CABLE-BULK ITEM | A.R. | |
| | UG-88C/U | PLUG-COAXIAL | 1 | |
| | [illegible] | PLUG-COAXIAL | 1 | |
| -11 | | VHF ANTENNA INSTALLATION SEE FIGURE 9-1 310 ONLY | 1 | |
| -12 | [illegible] | CIRCUIT BREAKER | 1 | |
| -13 | [illegible] | SWITCH - REF FIGURE [illegible] MODEL 310 | 1 | |
| -14 | | MICROPHONE INSTALLATION SEE FIGURE [illegible] | 1 | |
| -15 | | SPEAKER INSTALLATION SEE FIGURE [illegible] | 1 | |
| | [illegible] | HEADSET | 1 | |
| -16 | [illegible] | PHONE JACK | 1 | |
| -17 | | DROPPING RESISTOR-FLT PNL & RADIO DIAL LT-OPT SEE FIGURE 10-[illegible] | 1 | |
| | | RADIO NOISE FILTER SEE FIGURE 10-[illegible] | [illegible] | |

* ITEMS MARKED WITH ASTERISK SUPPLIED WHEN COMPLETE RADIO IS PURCHASED.

# SECTION VI

# PANTRONICS TRANSCEIVER

TABLE OF CONTENTS


| Figure | | Page |
|---|---|---|
| 6-1 | Pantronics (Type DX10-D) Radio Installation - Reel & Fixed Antenna - Model 182 Only | 6-2 |
| 6-2 | Pantronics (Type DX10-D) Radio Installation - Fixed Antenna - Model 182 Only | 6-6 |
| 6-3 | Pantronics (Type DX10-D) Radio Installation - Reel & Fixed Antenna - Models 205, 206, P206, & U206 Only | 6-8 |
| 6-4 | Pantronics (Type DX10-D) Radio Installation - Fixed Antenna Model 205, 206, P206, & U206 Only | 6-12 |
| 6-5 | Pantronics (Type DX10-D) Radio Installation - Reel & Fixed Antenna - Model 210 Only | 6-14 |
| 6-6 | Pantronics (Type DX10-D) Radio Installation - Fixed Antenna - Model 210 Only | 6-18 |
| 6-7 | Pantronics (Type DX10-DA) Radio Installation - Reel & Fixed Antenna - Model 172 Only | 6-20 |
| 6-8 | Pantronics (Type DX10-DA) Radio Installation - Reel & Fixed Antenna - Models 180 & 185 Only | 6-24 |
| 6-9 | Pantronics (Type DX10-DA) Radio Installation - Reel & Fixed Antenna - Model 182 Only | 6-28 |
| 6-10 | Pantronics (Type DX10-DA) Radio Installation - Reel & Fixed Antenna - Models P206, TP206, U206, & TU206 Only | 6-32 |
| 6-11 | Pantronics (Type DX10-DA) Radio Installation - Reel & Fixed Antenna - Models 210 & T210 Only | 6-36 |
| 6-12 | Pantronics (Type DX10-DA) Radio Installation - Fixed Antenna - Model 337 Only | 6-40 |

PANTRONICS RADIO INSTALLATION - REEL & FIXED ANTENNA

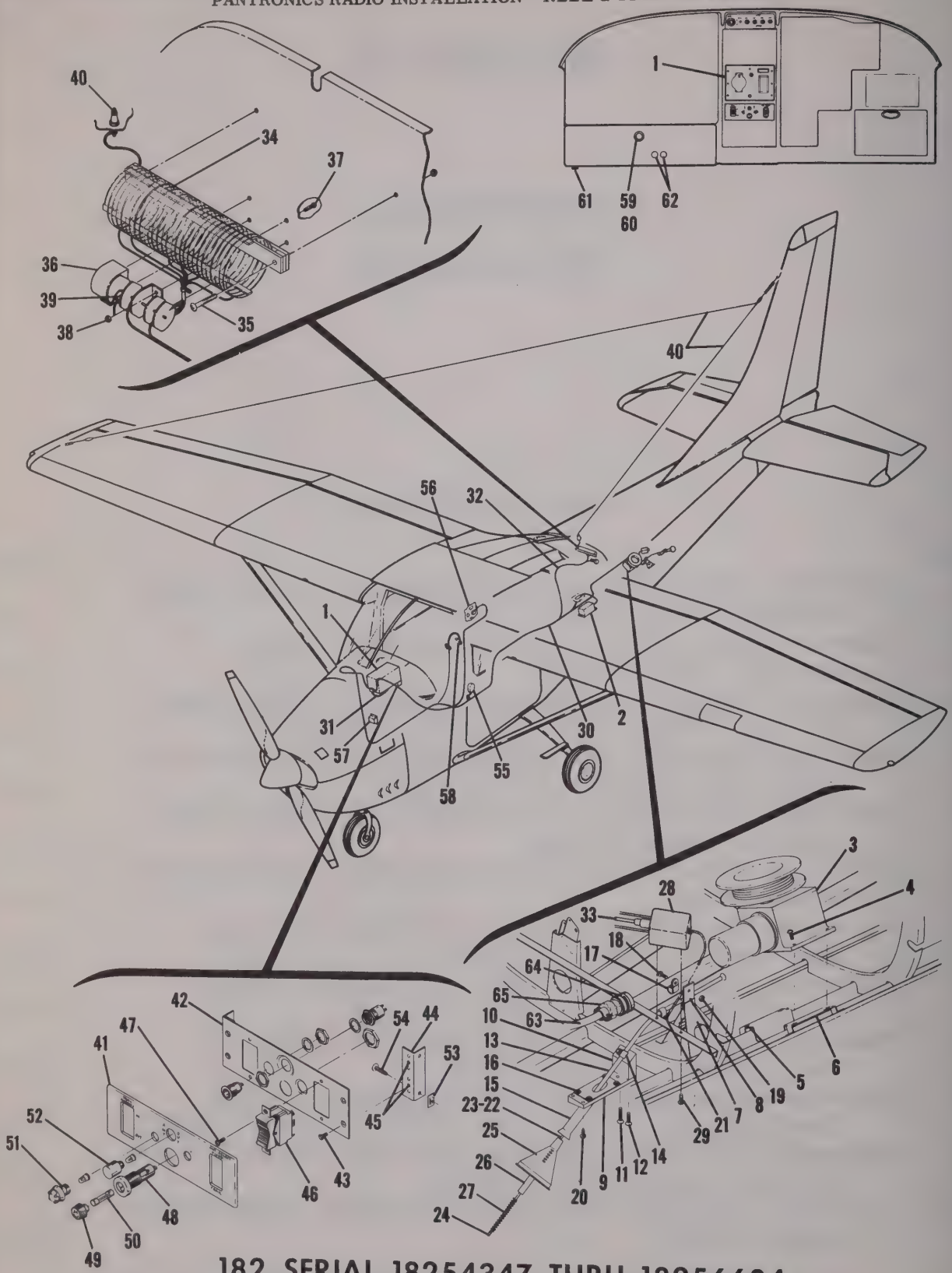


182 SERIAL 18254347 THRU 18256684

Figure 6-1. Pantronics Radio Installation - Reel & Fixed Antenna

| FIGURE AND INDEX NO. | PART NUMBER | DESCRIPTION<br>1 2 3 4 5 6 7 | UNITS PER ASSY | USABLE ON CODE |
|---|---|---|---|---|
| 6-1- | | PANTRONICS RADIO INSTALLATION-REEL OUT AND FIXED ANTENNA---- 182 ONLY | NP | |
| - 1 | DX10-D | * TRANSCEIVER---------- | 1 | |
| | | ATTACHING PARTS | | |
| | S1021Z6-8 | SCREW---------- | 4 | |
| | AN960-6 | WASHER---------- | 8 | |
| | NAS446-2-3 | NUT ---------- | 4 | |
| | | ---*--- | | |
| - 2 | DX10-PS | * POWER SUPPLY---------- | 1 | |
| | | ATTACHING PARTS | | |
| | A8K75 | RIVNUT---------- | 4 | |
| | AN936A8 | WASHER---------- | 4 | |
| | AN515-8R16 | SCREW---------- | 4 | |
| | | ---*--- | | |
| - 3 | SP-10010 | REEL ASSY ALTERNATE PART IS #31-420A---------- | 1 | |
| | | ATTACHING PARTS | | |
| - 4 | AN4-4A | BOLT---------- | 4 | |
| | | ---*--- | | |
| - 5 | 0770639-1 | BRACKET ASSEMBLY-INBOARD---------- | 1 | |
| | NAS697A4 | NUTPLATE---------- | 2 | |
| - 6 | 0770639-2 | BRACKET ASSEMBLY-OUTBOARD---------- | 1 | |
| | NAS697A4 | NUTPLATE---------- | 2 | |
| - 7 | 0770656-2 | TUBE SUPPORT ASSEMBLY---------- | 1 | |
| - 8 | 0770656-5 | PLATE-INSULATOR---------- | 1 | |
| | 0770653-1 | FAIRLEAD ASSY---------- | 1 | |
| | 0770653-6 | MOUNTING BLOCK ASSY---------- | 1 | |
| - 9 | 0770653-3 | MOUNTING BLOCK---------- | 1 | |
| - 10 | 0770653-5 | SUPPORT-ANT GUIDE---------- | 1 | |
| | | ATTACHING PARTS | | |
| - 11 | AN507-832R10 | SCREW---------- | 1 | |
| - 12 | AN507-832R8 | SCREW---------- | 1 | |
| | | ---*--- | | |
| - 13 | 0770654-1 | TUBE-ANT GUIDE---------- | 1 | |
| | | ATTACHING PARTS | | |
| - 14 | AN742D4 | CLAMP---------- | 1 | |
| | AN515-8R12 | SCREW---------- | 1 | |
| | MS20365-832C | NUT---------- | 1 | |
| | | ---*--- | | |
| - 15 | 0770041-1 | PLATE ASSY-REEL ANT---------- | 1 | |
| | | ATTACHING PARTS | | |
| - 16 | AN515-6R6 | SCREW---------- | 4 | |
| | MS20365-632C | NUT---------- | 4 | |
| | | ---*--- | | |
| | | ATTACHING PARTS | | |
| - 17 | AN742D4 | CLAMP---------- | 1 | |
| - 18 | AN515-8R8 | SCREW---------- | 1 | |
| - 19 | MS20365-832C | NUT ---------- | 1 | |
| - 20 | S1021Z8-8 | SCREW---------- | 3 | |
| | | ---*--- | | |
| - 21 | AN742D4 | CLAMP---------- | 1 | |
| | | ATTACHING PARTS | | |
| | AN515-8R6 | SCREW---------- | 1 | |
| | MS20364-832C | NUT ---------- | 1 | |
| | | ---*--- | | |
| - 22 | 0814308-2 | WIRE-TRAILING ANTENNA 100 FT LONG FOR USE WITH---- XMTR-RCVR FREQUENCY ABOVE 2400 KC | 1 | |
| - 23 | 0814308-5 | WIRE-TRAILING ANTENNA 120 FT LONG FOR USE WITH XMTR-RCVR FREQUENCY BELOW 2400 KC | | |
| | | ATTACHING PARTS | | |
| - 24 | RA2487-2 | TERMINAL---------- | 1 | |
| | | ---*--- | | |
| | 0770043-1 | DROGUE ASSY---------- | 1 | |
| - 25 | 0770043-2 | DROGUE---------- | 1 | |
| - 26 | 0770043-3 | RETAINER SPRING---------- | 1 | |
| - 27 | 0441021 | SPRING---------- | 1 | |

CONTINUED ON NEXT PAGE

| FIGURE AND INDEX NO. | PART NUMBER | DESCRIPTION<br>1 2 3 4 5 6 7 | UNITS PER ASSY | USABLE ON CODE |
|---|---|---|---|---|
| 6-1- 28 | 39001 | * ANTENNA CURRENT SENSING UNIT | 1 | |
| | | ATTACHING PARTS | | |
| - 29 | AN515-6R6 | SCREW | 2 | |
| | MS20364-632C | NUT | 2 | |
| | | ---*--- | | |
| - 30 | | CABLE ASSY-TRANSCEIVER TO POWER SUPPLY | NP | |
| | 126-807 | * RECEPTACLE-TRANSCEIVER END 20 PINS | 1 | |
| | 126-808 | * RECEPTACLE-POWER SUPPLY END 11 PINS | 1 | |
| - 31 | | CABLE ASSY-TRANSCEIVER TO TRAIL SELECT SW CABLE ON CONTROL PANEL | NP | |
| | RG-58A/U | COAXIAL CABLE-BULK ITEM | AR | |
| | PL-259 | PLUG-COAXIAL | 1 | |
| | UG-175/U | ADAPTER | 1 | |
| | UG-88C/U | PLUG-COAXIAL | 1 | |
| - 32 | | CABLE ASSY-FROM MOTOR SW ASSY TO FIXED ANT SW ON CONTROL PANEL | NP | |
| | RG-58A/U | COAXIAL CABLE-BULK ITEM | AR | |
| | UG-89/U | JACK-COAXIAL | 1 | |
| | S1367-2-8 | TERMINAL ON SHIELD | 1 | |
| - 33 | | CABLE ASSY-ANT CURRENT SENSING UNIT TO TRAIL SW ON CONTROL PANEL | NP | |
| | RG-58A/U | COAXIAL CABLE-BULK ITEM | 1 | |
| | PL-259 | * PLUG-COAXIAL | 1 | |
| | UG-175/U | * ADAPTER | 1 | |
| - 34 | 0812509-24 | COIL ASSEMBLY | 1 | |
| | 3906-1 | COIL | 1 | |
| | 0812509-3 | INSULATOR-COIL | 2 | |
| | 0812509-25 | SPACER | 2 | |
| | | ATTACHING PARTS | | |
| - 35 | AN515-8R18 | SCREW | 2 | |
| | MS20364-832C | NUT | 2 | |
| | | ---*--- | | |
| - 36 | 39002 | * MOTOR SWITCH ASSY | 1 | |
| | | ATTACHING PARTS | | |
| - 37 | AN515-8R10 | SCREW | 4 | |
| - 38 | MS20364-832C | NUT | 4 | |
| | | ---*--- | | |
| - 39 | 30D192A1 | CAPACITOR | 1 | |
| - 40 | | MF & HF WIRE ANTENNA INSTALLATION SEE FIGURE 8-5 | 1 | |
| | 0770630-3 | CONTROL PANEL ASSY-REEL ANTENNA WIRES NOT SUPPLIED | 1 | |
| - 41 | 0770635-1 | PLATE-CONTROL PANEL | 1 | |
| - 42 | 0770634-1 | PLATE-MOUNTING | 1 | |
| | | ATTACHING PARTS | | |
| - 43 | AN507-632R6 | SCREW | 4 | |
| | | ---*--- | | |
| - 44 | 0770634-2 | ANGLE ASSY | 2 | |
| - 45 | NAS697A06L | NUTPLATE | 4 | |
| - 46 | S1238-2-1 | SWITCH-ANTENNA SELECT | 1 | |
| | S1238-1-1 | SWITCH-TRAIL ANTENNA | 1 | |
| | | ATTACHING PARTS | | |
| - 47 | AN507-440R6 | SCREW | 4 | |
| | MS20365-440 | NUT | 4 | |
| | | ---*--- | | |
| - 48 | S1090-2 | FUSE HOLDER ASSY | 1 | |
| - 49 | S1090-11 | CAP | 1 | |
| - 50 | S1091-5 | FUSE-5A | 1 | |
| - 51 | VM-800-2 | LIGHT ASSY | 2 | |
| - 52 | VM-911M-4A | LIGHT ASSY | 1 | |
| | | ATTACHING PARTS | | |
| - 53 | NAS446-2-3 | NUT | 4 | |
| - 54 | S1021Z6-8 | SCREW | 4 | |
| | | ---*--- | | |
| | VCM-20 | 2500 WVDC, PLUS AND MINUS 5% 10 UUF CAPACITOR 2 REQD IN PARALLEL FOR EACH CHANNEL ON FREQUENCIES 8.5 AND ABOVE FOR SERIES CAPACITANCE ONLY. CHANNEL 9 & 10 | AR | |
| - 55 | | MICROPHONE INSTALLATION SEE FIGURE 9-4 | 1 | |
| - 56 | | SPEAKER INSTALLATION SEE FIGURE 9-3 | 1 | |
| | | TRANSMITTER SELECTOR SWITCH & AUD AMP INSTALLATION USED ONLY WHEN COMBINED WITH ANOTHER TRANSMITTER SEE FIGURE 9-1 | AR | |

CONTINUED ON NEXT PAGE

| FIGURE AND INDEX NO. | PART NUMBER | DESCRIPTION<br>1 2 3 4 5 6 7 | UNITS PER ASSY | USABLE ON CODE |
|---|---|---|---|---|
| 6-1- | | RADIO COOLING INSTALLATION---- SEE FIGURE 10-1 | 1 | |
| - 57 | | RADIO NOISE FILTER INSTALLTION-----SEE FIGURE 10-5 | 1 | |
| - 58 | 0770039-1 | HEADSET ASSY | 1 | |
| - 59 | R-12 1/2-75-RS34 | RHEOSTAT | 1 | |
| - 60 | S1163-2 | KNOB-RHEOSTAT | 1 | |
| - 61 | S1103-1 | PHONE JACK | 1 | |
| - 62 | S1232-15 | CIRCUIT BREAKER THRU 1963 ONLY | 2 | |
| | S1360-15 | CIRCUIT BREAKER 1964 AND ON | 1 | |
| - 63 | | CABLE ASSY-ANT REEL MOTOR TO IN-OUT REEL SW ON CONTROL PANEL | NP | |
| - 64 | PL-112 | PLUG | 1 | |
| - 65 | MS3057-10B | CLAMP | 1 | |

* ITEMS MARKED WITH ASTERISK SUPPLIED WHEN COMPLETE RADIO IS PURCHASED.

PANTRONICS RADIO INSTALLATION - FIXED ANTENNA

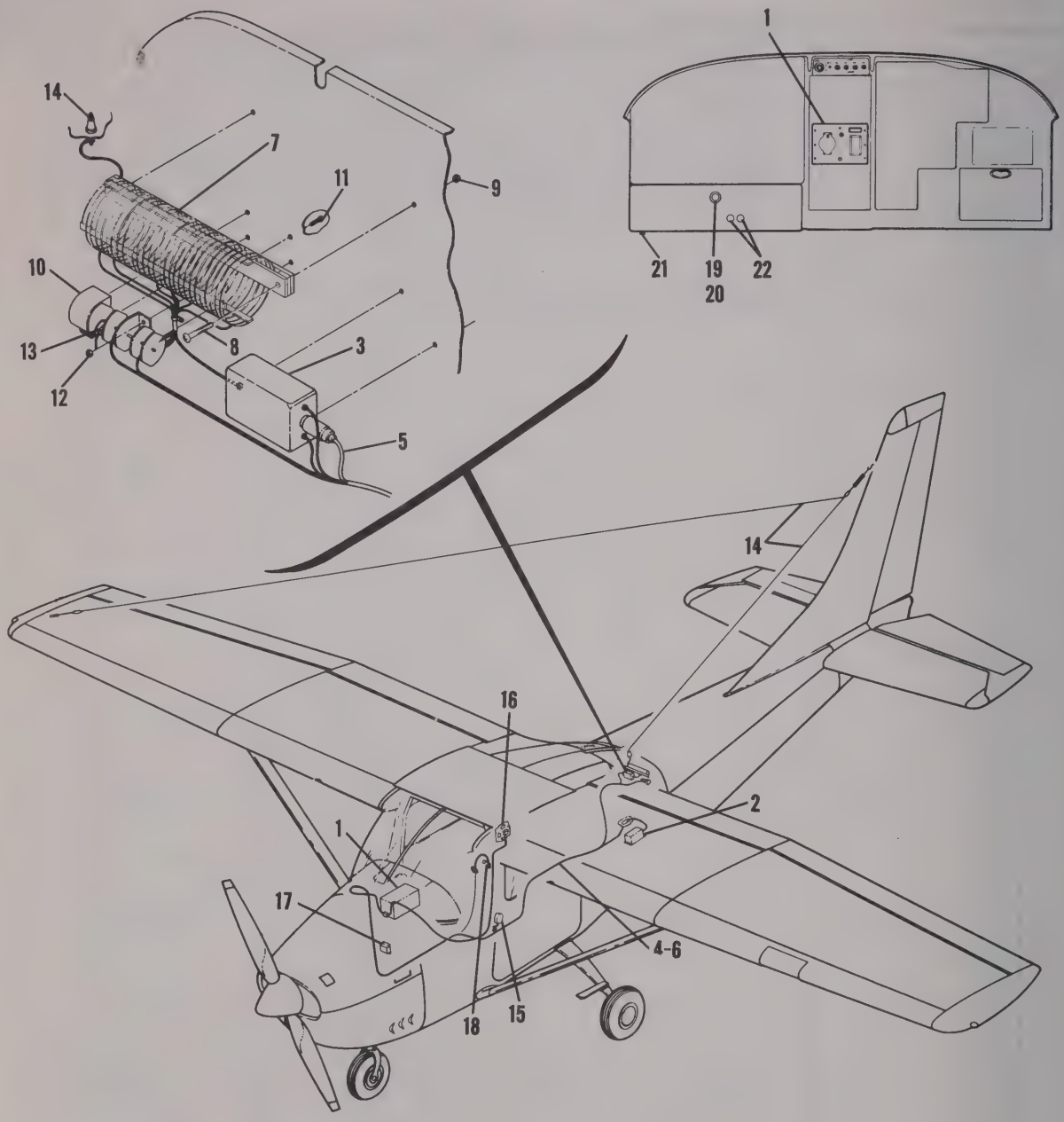


## 182 SERIAL 18254347 THRU 18256684

Figure 6-2. Pantronics (DX10-D) Radio Installation - Fixed Antenna

| FIGURE AND INDEX NO. | PART NUMBER | DESCRIPTION 1 2 3 4 5 6 7 | UNITS PER ASSY | USABLE ON CODE |
|---|---|---|---|---|
| 6-2- | | PANTRONICS RADIO INSTALLATION-FIXED ANTENNA 182 ONLY---- | N/P | |
| - 1 | DX10-D | * TRANSCEIVER---------- | 1 | |
| | | ATTACHING PARTS | | |
| | S1021Z6-8 | SCREW---------- | 4 | |
| | AN960-6 | WASHER---------- | 8 | |
| | NAS446-2-3 | NUT ---------- | 4 | |
| | | ---*--- | | |
| - 2 | DX10-PS | * POWER SUPPLY---------- | 1 | |
| | | ATTACHING PARTS | | |
| | A8K75 | RIVNUT---------- | 4 | |
| | AN936A8 | WASHER---------- | 4 | |
| | AN515-8R16 | SCREW---------- | 4 | |
| | | ---*--- | | |
| - 3 | 39001 | * ANTENNA CURRENT SENSING UNIT---------- | 1 | |
| | | ATTACHING PARTS | | |
| | AN515-6R6 | SCREW---------- | 2 | |
| | MS20364-632C | NUT ---------- | 2 | |
| | | ---*--- | | |
| - 4 | | CABLE ASSY-TRANSCEIVER TO POWER SUPPLY---------- | N/P | |
| | 126-807 | * RECEPTACLE-TRANSCEIVER END 20 PINS---------- | 1 | |
| | 126-808 | * RECEPTACLE-POWER SUPPLY END 11 PINS---------- | 1 | |
| - 5 | | CABLE ASSY-ANT CURRENT SENSING UNIT TO TRANSCEIVER CABLE | N/P | |
| | RG-58A/U | COAXIAL CABLE-BULK ITEM---------- | A/R | |
| | PL-259 | * PLUG-COAXIAL---------- | 1 | |
| | UG-175/U | * ADAPTER---------- | 1 | |
| | UG-89/U | JACK-COAXIAL---------- | 1 | |
| - 6 | | CABLE ASSY-TRANSCEIVER TO ANT CURRENT SENSING UNIT------ | N/P | |
| | RG-58A/U | COAXIAL CABLE-BULK ITEM---------- | A/R | |
| | UG-88C/U | PLUG-COAXIAL---------- | 1 | |
| - 7 | 0812509-24 | COIL ASSEMBLY---------- | 1 | |
| | 3906-1 | COIL---------- | 1 | |
| | 0812509-3 | INSULATOR---------- | 2 | |
| | 0812509-25 | SPACER---------- | 2 | |
| | | ATTACHING PARTS | | |
| - 8 | AN515-8R18 | SCREW---------- | 2 | |
| - 9 | MS20364-832C | NUT ---------- | 2 | |
| | | ---*--- | | |
| - 10 | 39002 | * MOTOR SWITCH ASSY---------- | 1 | |
| | | ATTACHING PARTS | | |
| - 11 | AN515-8R10 | SCREW---------- | 4 | |
| - 12 | MS20364-832C | NUT ---------- | 4 | |
| | | ---*--- | | |
| - 13 | 30D192A1 | CAPACITOR---------- | 1 | |
| - 14 | | MF & HF FIXED WIRE ANTENNA INSTALLATION SEE FIGURE 8-5 | 1 | |
| | VCM-20 | 2500 WVDC, - 5% 100UF CAPACITOR 2 REQD IN PARALLEL FOR | A/R | |
| | | EACH CHANNEL ON FREQUENCIES 8.5 AND ABOVE FOR SERIES | | |
| | | CAPACITANCE ONLY. CHANNELS 9 & 10. | | |
| - 15 | | MICROPHONE INSTALLATION SEE FIGURE 9-4---------- | 1 | |
| - 16 | | SPEAKER INSTALLATION SEE FIGURE 9-3---------- | 1 | |
| | | TRANSMITTER SELECTOR SWITCH & AUD AMP INSTALLATION USED ONLY | A/R | |
| | | WHEN DUAL TRANSMITTERS ARE INSTALLED | | |
| | | SEE FIGURE 9-1 | | |
| | | RADIO COOLING INSTALLATION SEE FIGURE 10-1---------- | 1 | |
| - 17 | | RADIO NOISE FILTER INSTALLATION SEE FIGURE 10-5------- | 1 | |
| - 18 | 0770039-1 | HEADSET ASSY---------- | 1 | |
| - 19 | R-12 1/2-75-RS34 | RHEOSTAT---------- | 1 | |
| - 20 | S1163-2 | KNOB-RHEOSTAT---------- | 1 | |
| - 21 | S1103-1 | PHONE-JACK---------- | 1 | |
| - 22 | S1232-15 | CIRCUIT BREAKER THRU 1963 ONLY---------- | 2 | |
| | S1360-15 | CIRCUIT BREAKER 1964 AND ON---------- | 1 | |

* ITEMS MARKED WITH ASTERISK SUPPLIED WHEN COMPLETE RADIO IS PURCHASED.

PANTRONICS RADIO INSTALLATION - REEL & FIXED ANTENNA (205 ONLY)

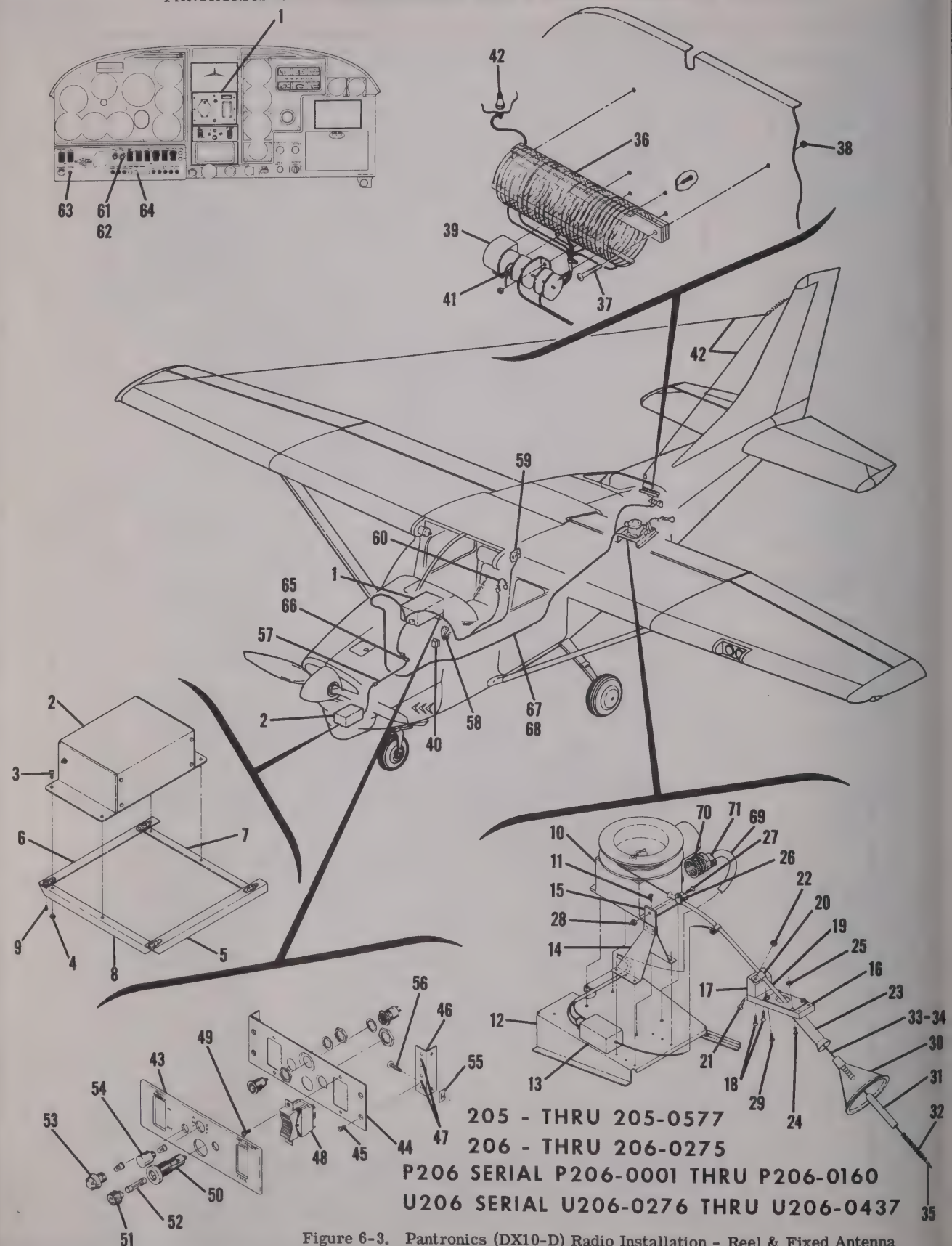


Figure 6-3. Pantronics (DX10-D) Radio Installation - Reel & Fixed Antenna

| FIGURE AND INDEX NO. | PART NUMBER | DESCRIPTION<br>1 2 3 4 5 6 7 | UNITS PER ASSY | USABLE ON CODE |
|---|---|---|---|---|
| 6-3- | | PANTRONICS RADIO INSTALLATION-REEL OUT & FIXED ANTENNA------<br>ON MODELS 205, 206, P206 & U206 | N/P | |
| - 1 | DX10-D | * TRANSCEIVER---------- | 1 | |
| | | ATTACHING PARTS | | |
| | S1021Z6-8 | SCREW---------- | 4 | |
| | AN960-6 | WASHER---------- | 8 | |
| | NAS446-2-3 | NUT ---------- | 4 | |
| | | ---*--- | | |
| - 2 | DX10-PS | * POWER SUPPLY---------- | 1 | |
| | | ATTACHING PARTS | | |
| - 3 | AN515-8R8 | SCREW---------- | 4 | |
| - 4 | MS20364-832C | NUT ---------- | 4 | |
| | | ---*--- | | |
| - 5 | 1270627-85 | SIDE ANGLE ASSY-LH---------- | 1 | |
| - 6 | 1270627-86 | SIDE ANGLE ASSY-RH---------- | 1 | |
| - 7 | 1270627-74 | ATTACH ANGLE REAR---------- | 1 | |
| - 8 | 1270627-73 | ATTACH ANGLE FRONT---------- | 1 | |
| | | ATTACHING PARTS | | |
| - 9 | AN520-10R6 | SCREW---------- | 4 | |
| | | ---*--- | | |
| - 10 | SP-10010 | REEL ASSY ALTERNATE PART IS #31-420A---------- | 1 | |
| | | ATTACHING PARTS | | |
| - 11 | AN520-416R8 | SCREW---------- | 4 | |
| | | ---*--- | | |
| - 12 | 1270635-1 | SUPPORT ASSY---------- | 1 | |
| | 1270635-2 | SUPPORT---------- | 1 | |
| | NAS697A4 | NUTPLATE---------- | 4 | |
| | NAS696A08 | NUTPLATE---------- | 4 | |
| | NAS697A08 | NUTPLATE---------- | 2 | |
| | | ATTACHING PARTS | | |
| | AN515-8R6 | SCREW---------- | 4 | |
| | | ---*--- | | |
| - 13 | 39001 | * ANTENNA CURRENT SENSE UNIT---------- | 1 | |
| | | ATTACHING PARTS | | |
| | AN515-6R6 | SCREW---------- | 2 | |
| | | ---*--- | | |
| - 14 | 1270440-1 | TUBE SUPPORT ASSY---------- | 1 | |
| - 15 | 1270440-2 | INSULATOR PLATE---------- | 1 | |
| | 0770653-2 | FAIRLEAD ASSY---------- | 1 | |
| | 0770653-7 | MOUNTING BLOCK ASSY---------- | 1 | |
| - 16 | 0770653-4 | MOUNTING BLOCK---------- | 1 | |
| - 17 | 0770653-5 | SUPPORT-ANT GUIDE---------- | 1 | |
| | | ATTACHING PARTS | | |
| - 18 | AN507-832R10 | SCREW---------- | 2 | |
| | | ---*--- | | |
| - 19 | 1270439-1 | TUBE-ANT GUIDE---------- | 1 | |
| | | ATTACHING PARTS | | |
| - 20 | AN742D4 | CLAMP---------- | 1 | |
| - 21 | AN515-8R12 | SCREW---------- | 1 | |
| - 22 | MS20365-832C | NUT---------- | 1 | |
| | | ---*--- | | |
| - 23 | 0770041-1 | PLATE ASSY-REEL ANT---------- | 1 | |
| | | ATTACHING PARTS | | |
| - 24 | AN515-6R6 | SCREW---------- | 4 | |
| - 25 | MS20365-632C | NUT---------- | 4 | |
| | | ---*--- | | |
| | | ATTACHING PARTS | | |
| - 26 | AN742D4 | CLAMP---------- | 1 | |
| - 27 | AN515-8R6 | SCREW---------- | 1 | |
| - 28 | MS20364-832C | NUT ---------- | 1 | |
| - 29 | S1021Z8-8 | SCREW---------- | 3 | |
| | | ---*--- | | |
| | 0770043-1 | DROGUE ASSY---------- | 1 | |
| - 30 | 0770043-2 | DROGUE---------- | 1 | |
| - 31 | 0770043-3 | RETAINER-SPRING---------- | 1 | |

CONTINUED ON NEXT PAGE

| FIGURE AND INDEX NO. | PART NUMBER | DESCRIPTION<br>1 2 3 4 5 6 7 | UNITS PER ASSY | USABLE ON CODE |
|---|---|---|---|---|
| 6-3- 32 | 0441021 | SPRING | 1 | |
| - 33 | 0814308-2 | WIRE-TRAILING ANTENNA 100 FT LONG FOR USE WITH XMTR-RCVR FREQUENCY ABOVE 2400 KC | 1 | |
| - 34 | 0814308-5 | WIRE-TRAILING ANTENNA 120 FT LONG FOR USE WITH XMTR-RCVR FREQUENCY BELOW 2400 KC | 1 | |
| | | ATTACHING PARTS | | |
| - 35 | RA2487-2 | TERMINAL | 1 | |
| | | ---*--- | | |
| - 36 | 0812509-24 | COIL ASSEMBLY | 1 | |
| | 3906-1 | COIL | 1 | |
| | 0812509-3 | INSULATOR-COIL | 2 | |
| | 0812509-25 | SPACER | 2 | |
| | | ATTACHING PARTS | | |
| - 37 | AN515-8R18 | SCREW | 2 | |
| - 38 | MS20364-832C | NUT | 2 | |
| | | ---*--- | | |
| - 39 | 39002 | * MOTOR SWITCH ASSY | 1 | |
| | | ATTACHING PARTS | | |
| | AN515-8R10 | SCREW | 4 | |
| | MS20364-832C | NUT | 4 | |
| | | ---*--- | | |
| - 40 | | RADIO NOISE FILTER INSTALLATION SEE FIGURE 10-5 | 1 | |
| - 41 | 30D192A1 | CAPACITOR | 1 | |
| - 42 | | MF & HF FIXED WIRE ANTENNA INSTALLATION SEE FIGURE 8-5 | 1 | |
| | 0770630-3 | CONTROL PANEL ASSY-REEL ANTENNA WIRES NOT SUPPLIED | 1 | |
| - 43 | 0770635-1 | PLATE-CONTROL PANEL | 1 | |
| - 44 | 0770634-1 | PLATE-MOUNTING | 1 | |
| | | ATTACHING PARTS | | |
| - 45 | AN507-632R6 | SCREW | 4 | |
| | | ---*--- | | |
| - 46 | 0770634-2 | ANGLE ASSY | 2 | |
| - 47 | NAS697A06L | NUTPLATE | 4 | |
| - 48 | S1238-2-1 | SWITCH-ANTENNA SELECT | 1 | |
| | S1238-1-1 | SWITCH-TRAIL ANTENNA | 1 | |
| | | ATTACHING PARTS | | |
| - 49 | AN507-440R6 | SCREW | 4 | |
| | MS20365-440C | NUT | 4 | |
| | | ---*--- | | |
| - 50 | S1090-2 | FUSE HOLDER ASSEMBLY | 1 | |
| - 51 | S1090-11 | CAP-5A | 1 | |
| - 52 | S1091-5 | FUSE-5A | 1 | |
| - 53 | VM-800-2 | LIGHT ASSEMBLY | 2 | |
| - 54 | VM-911M-4A | LIGHT ASSEMBLY | 1 | |
| | | ATTACHING PARTS | | |
| - 55 | NAS446-2-3 | NUT | 4 | |
| - 56 | S1021-6-8 | SCREW | 4 | |
| | | ---*--- | | |
| - 57 | | CABLE ASSY-TRANSCEIVER TO POWER SUPPLY | N/P | |
| | 126-807 | * RECEPTACLE-TRANSCEIVER END 20 PINS | 1 | |
| | 126-808 | * RECEPTACLE-POWER SUPPLY END 11 PINS | 1 | |
| | VSM-20 | 2500 WVDC,-5% 10 UUF CAPACITOR 2 REQD IN PARALLEL FOR EACH CHANNEL ON FREQUENCIES 8.5 AND ABOVE FOR SERIES CAPACITANCE ONLY. CHANNELS 9 & 10. | A/R | |
| - 58 | | MICROPHONE INSTALLATION SEE FIGURE 9-4. | 1 | |
| - 59 | | SPEAKER INSTALLATION SEE FIGURE 9-3. | 1 | |
| | | RADIO COOLING INSTALLATION SEE FIGURE 10-1 | 1 | |
| - 60 | 0770039-1 | HEADSET ASSY | 1 | |
| - 61 | R-12 1/2-75-RS34 | RHEOSTAT | 1 | |
| - 62 | S1163-2 | KNOB-RHEOSTAT | 1 | |
| - 63 | S1103-1 | PHONE JACK | 1 | |

CONTINUED ON NEXT PAGE

| FIGURE AND INDEX NO. | PART NUMBER | 1 2 3 4 5 6 7 DESCRIPTION | UNITS PER ASSY | USABLE ON CODE |
|---|---|---|---|---|
| 6-3- 64 | S1232-15 | CIRCUIT BREAKER THRU 1963 ONLY---------- | 1 | |
| | S1360-15 | CIRCUIT BREAKER 1964 AND ON---------- | 1 | |
| - 65 | 1213614-11 | COVER PLATE---------- | 2 | |
| - 66 | NAS557-10A | GROMMET---------- | 1 | |
| - 67 | | CABLE ASSY-ANT SEL SW CONTROL PANEL TO ANT CURRENT-------- SENSING UNIT | N/P | |
| | RG-58A/U | COAXIAL CABLE-BULK ITEM---------- | A/R | |
| | PL-259 | PLUG-COAXIAL---------- | 1 | |
| | UG-175/U | ADAPTER---------- | 1 | |
| - 68 | | CABLE ASSY-MOTOR SW ASSY TO ANT SEL SW CONTROL PANEL CABLE | N/P | |
| | RG-58A/U | COAXIAL CABLE-BULK ITEM---------- | A/R | |
| | UG-89/U | PLUG---------- | 1 | |
| - 69 | | CABLE ASSY-ANT REEL MOTOR TO IN-OUT REEL SW ON---------- CONTROL PANEL | N/P | |
| - 70 | PL-112 | PLUG---------- | 1 | |
| - 71 | MS3057-108 | CLAMP---------- | 1 | |
| | | CABLE ASSY-TRANSCEIVER TO ANT SEL SW CABLE---------- | N/P | |
| | RG-58A/U | COAXIAL CABLE-BULK ITEM---------- | A/R | |
| | UG-88C/U | PLUG-COAXIAL---------- | 1 | |

* ITEMS MARKED WITH ASTERISK SUPPLIED WHEN RADIO IS PURCHASED.

PANTRONICS RADIO INSTALLATION - FIXED ANTENNA

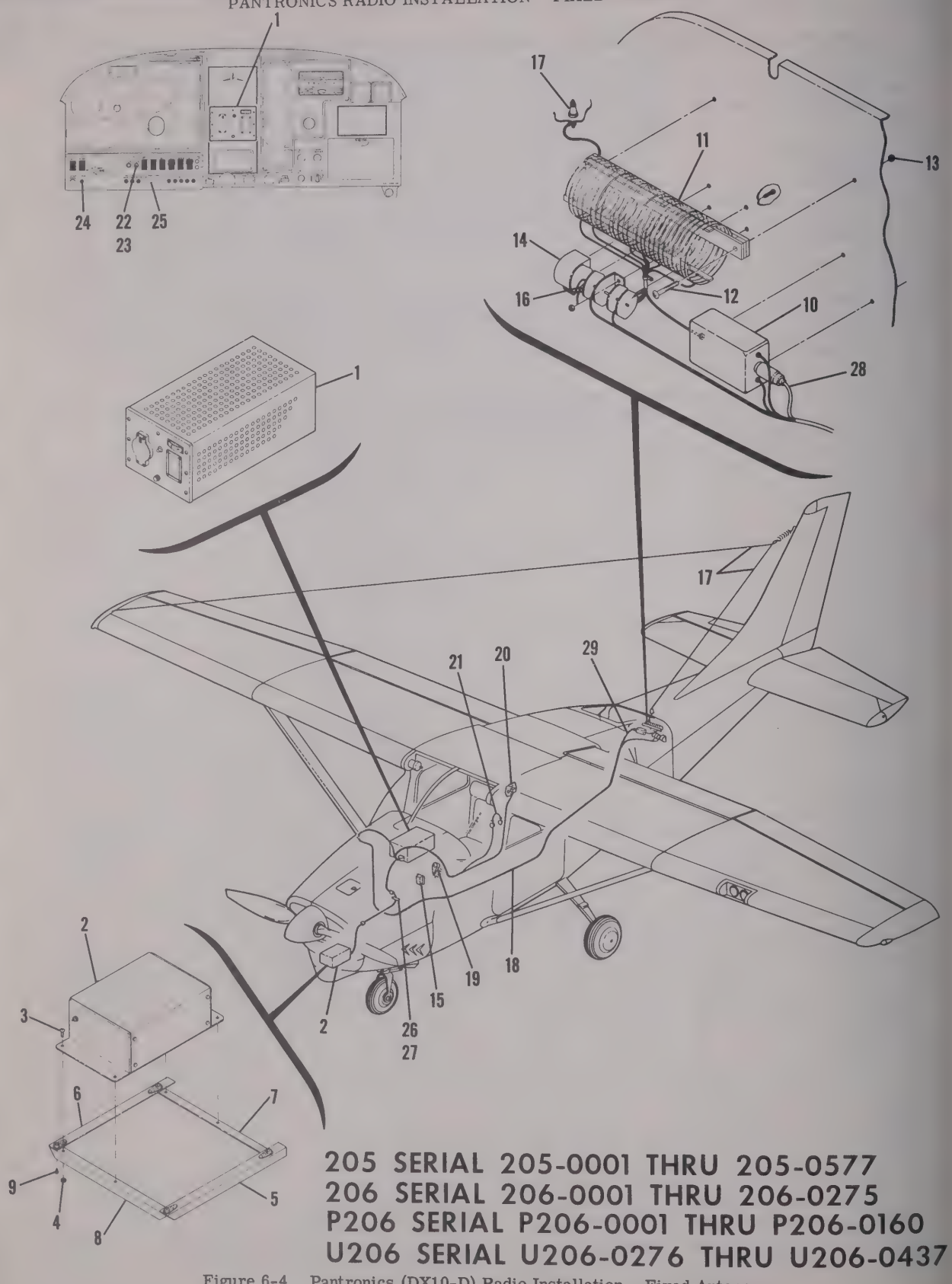


205 SERIAL 205-0001 THRU 205-0577
206 SERIAL 206-0001 THRU 206-0275
P206 SERIAL P206-0001 THRU P206-0160
U206 SERIAL U206-0276 THRU U206-0437

Figure 6-4. Pantronics (DX10-D) Radio Installation - Fixed Antenna

| FIGURE AND INDEX NO. | PART NUMBER | DESCRIPTION<br>1 2 3 4 5 6 7 | UNITS PER ASSY | USABLE ON CODE |
|---|---|---|---|---|
| 6-4- | | PANTRONICS RADIO INSTALLATION-FIXED ANTENNA----------<br>ON MODELS 205, 206, P206 & U206 | N/P | |
| - 1 | DX10-D | * TRANSCEIVER----------<br>ATTACHING PARTS | 1 | |
| | S1021Z6-8 | SCREW---------- | 4 | |
| | AN960-6 | WASHER---------- | 8 | |
| | NAS446-2-3 | NUT ---------- | 4 | |
| | | ---*--- | | |
| - 2 | DX10-PS | * POWER SUPPLY----------<br>ATTACHING PARTS | 1 | |
| - 3 | AN515-8R8 | SCREW---------- | 4 | |
| - 4 | MS20364-832C | NUT ---------- | 4 | |
| | | ---*--- | | |
| - 5 | 1270627-85 | SIDE ANGLE ASSY-LH---------- | 1 | |
| - 6 | 1270627-86 | SIDE ANGLE ASSY-RH---------- | 1 | |
| - 7 | 1270627-74 | ATTACH ANGLE REAR---------- | 1 | |
| - 8 | 1270627-73 | ATTACH ANGLE FRONT----------<br>ATTACHING PARTS | 1 | |
| - 9 | AN520-10R6 | SCREW---------- | 4 | |
| | | ---*--- | | |
| - 10 | 39001 | * ANTENNA CURRENT SENSE UNIT----------<br>ATTACHING PARTS | 1 | |
| | AN515-6R6 | SCREW---------- | 2 | |
| | MS20364-632C | NUT ---------- | 2 | |
| | | ---*--- | | |
| - 11 | 0812509-24 | COIL ASSEMBLY---------- | 1 | |
| | 3906-1 | COIL---------- | 1 | |
| | 0812509-3 | INSULATOR-COIL---------- | 1 | |
| | 0812509-25 | SPACER----------<br>ATTACHING PARTS | 2 | |
| - 12 | AN515-8R18 | SCREW---------- | 2 | |
| - 13 | MS20364-832C | NUT ---------- | 2 | |
| | | ---*--- | | |
| - 14 | 39002 | * MOTOR SWITCH ASSY----------<br>ATTACHING PARTS | 1 | |
| | AN515-8R10 | SCREW---------- | 4 | |
| | MN20364-832C | NUT ---------- | 4 | |
| | | ---*--- | | |
| - 15 | | RADIO NOISE FILTER INSTL SEE FIGURE 10-5---------- | 1 | |
| - 16 | 30D192A1 | CAPACITOR---------- | 1 | |
| - 17 | | MF & HF FIXED WIRE ANTENNA INSTALLATION SEE FIGURE 8-5 | 1 | |
| - 18 | | CABLE ASSY-TRANSCEIVER TO POWER SUPPLY---------- | N/P | |
| | 126-807 | * RECEPTACLE-TRANSCEIVER END 20 PINS---------- | 1 | |
| | 126-808 | * RECEPTACLE-POWER SUPPLY END 11 PINS---------- | 1 | |
| | VCM-20 | 2500 WVDC,-5% 10 UUF CAPACITOR 2 REQUIRED IN PARALLEL-<br>FOR EACH CHANNEL ON FREQUENCIES 8.5 AND ABOVE FOR SERIES<br>CAPACITANCE ONLY. CHANNELS 9 & 10. | 1 | |
| - 19 | | MICROPHONE INSTALLATION SEE FIGURE 9-4---------- | 1 | |
| - 20 | | SPEAKER INSTALLATION SEE FIGURE 9-3---------- | 1 | |
| | | RADIO COOLING INSTALLATION SEE FIGURE 10-1---------- | 1 | |
| - 21 | 0770039-1 | HEADSET ASSY---------- | 1 | |
| - 22 | R-12 1/2-75-RS34 | RHEOSTAT---------- | 1 | |
| - 23 | S1163-2 | KNOB-RHEOSTAT---------- | 1 | |
| - 24 | S1103-1 | PHONE JACK---------- | 1 | |
| - 25 | S1232-15 | CIRCUIT BREAKER THRU 1963 ONLY---------- | 1 | |
| | S1360-15 | CIRCUIT BREAKER 1964 AND ON---------- | 1 | |
| - 26 | 1213614-11 | COVER PLATE---------- | 2 | |
| - 27 | NAS557-10A | GROMMET---------- | 1 | |
| - 28 | | CABLE ASSY-ANT CURRENT SENSING UNIT TO TRANSCEIVER CABLE-- | N/P | |
| | RG-58A/U | COAXIAL CABLE-BULK ITEM---------- | A/R | |
| | UG-175/U | ADAPTER---------- | 1 | |
| | PL-259 | PLUG-COAXIAL---------- | 1 | |
| | UG-89/U | JACK-COAXIAL---------- | 1 | |
| - 29 | | CABLE ASSY-TRANSCEIVER TO ANT CURRENT SENSING UNIT CABLE-- | N/P | |
| | RG-58A/U | COAXIAL CABLE-BULK ITEM---------- | A/R | |
| | UG-88C/U | PLUG-COAXIAL---------- | 1 | |

* ITEMS MARKED WITH ASTERISK SUPPLIED WHEN COMPLETE RADIO IS PURCHASED

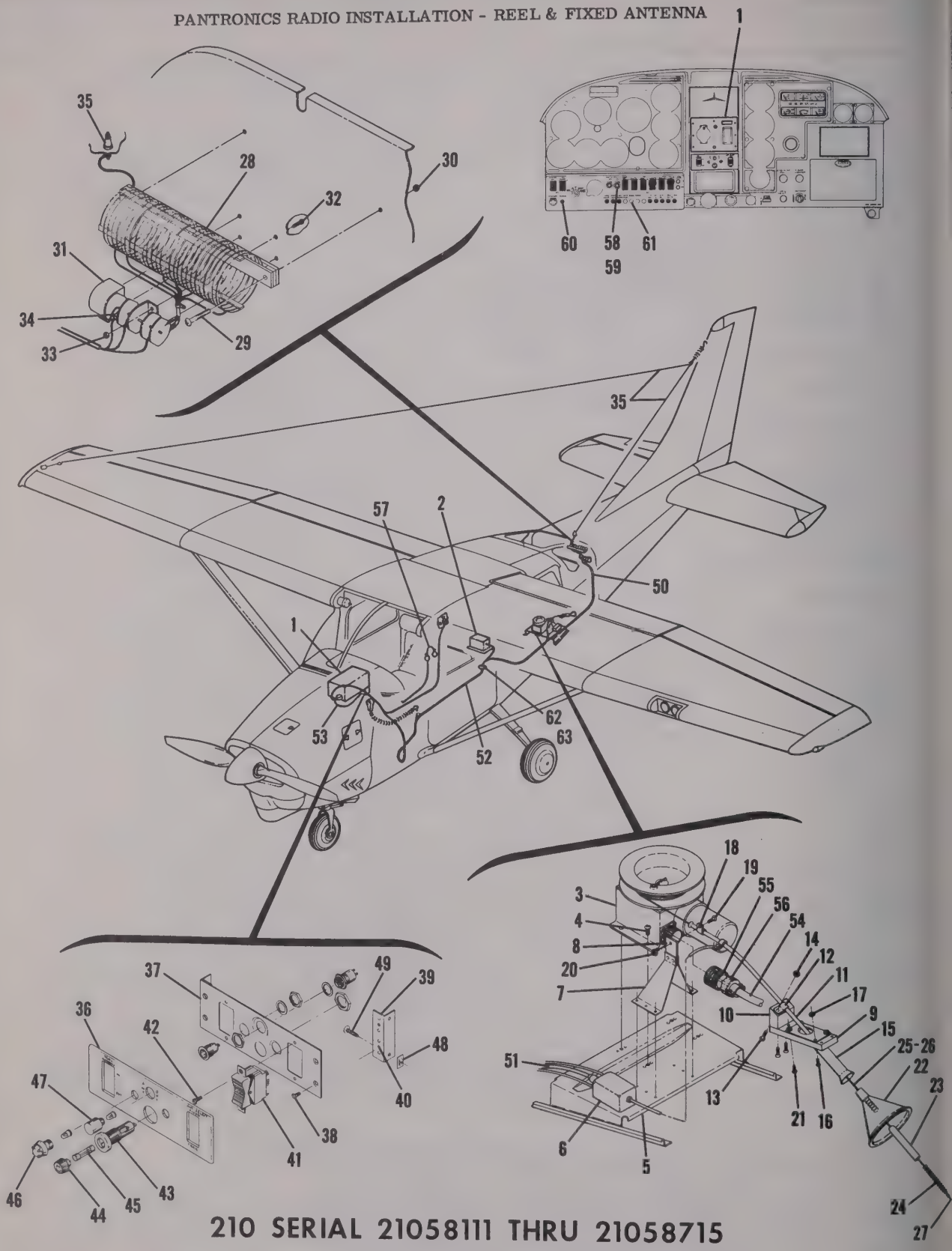


Figure 6-5. Pantronics (DX10-D) Radio Installation - Reel & Fixed Antenna

| FIGURE AND INDEX NO. | PART NUMBER | DESCRIPTION<br>1 2 3 4 5 6 7 | UNITS PER ASSY | USABLE ON CODE |
|---|---|---|---|---|
| 6-5- | | PANTRONICS RADIO INSTALLATION-REEL OUT & FIXED ANTENNA ONLY 210 | N/P | |
| - 1 | DX10-D | * TRANSCEIVER | 1 | |
| | | ATTACHING PARTS | | |
| | S1021Z6-8 | SCREW | 4 | |
| | AN960-6 | WASHER | 8 | |
| | NAS446-2-3 | NUT | 4 | |
| | | ---*--- | | |
| - 2 | DX10-PS | * POWER SUPPLY | 1 | |
| | | ATTACHING PARTS | | |
| | AN515-8R16 | SCREW | 4 | |
| | A8K75 | RIVNUT | 4 | |
| | | ---*--- | | |
| - 3 | SP-10010 | REEL ASSY ALTERNATE PART IS #31-420A | 1 | |
| | | ATTACHING PARTS | | |
| - 4 | AN520-416R8 | SCREW | 4 | |
| | | ---*--- | | |
| - 5 | 1270435-3 | BRACKET ASSY | 1 | |
| | NAS697A4 | NUTPLATE | 4 | |
| | NAS680A06 | NUTPLATE | 2 | |
| | 1270435-4 | BRACKET | 1 | |
| - 6 | 39001 | * ANTENNA CURRENT SENSE UNIT | 1 | |
| | | ATTACHING PARTS | | |
| | AN515-6R8 | SCREW | 2 | |
| | | ---*--- | | |
| - 7 | 1270440-1 | TUBE SUPPORT ASSY | 1 | |
| - 8 | 1270440-2 | INSULATOR PLATE | 1 | |
| | 0770653-2 | FAIRLEAD ASSY | 1 | |
| | 0770653-7 | MOUNTING BLOCK ASSY | 1 | |
| - 9 | 0770653-4 | MOUNTING BLOCK | 1 | |
| - 10 | 0770653-5 | SUPPORT-ANT GUIDE | 1 | |
| | | ATTACHING PARTS | | |
| | AN507-832R10 | SCREW | 2 | |
| | | ---*--- | | |
| - 11 | 1270439-1 | TUBE-ANT GUIDE | 1 | |
| | | ATTACHING PARTS | | |
| - 12 | AN742D4 | CLAMP | 1 | |
| - 13 | AN515-8R12 | SCREW | 1 | |
| - 14 | MS20365-832C | NUT | 1 | |
| | | ---*--- | | |
| - 15 | 0770041-1 | PLATE ASSY-REEL ANT | 1 | |
| | | ATTACHING PARTS | | |
| - 16 | AN515-6R6 | SCREW | 4 | |
| - 17 | MS20365-632C | NUT | 4 | |
| | | ---*--- | | |
| | | ATTACHING PARTS | | |
| - 18 | AN742D4 | CLAMP | 1 | |
| - 19 | AN515-8R6 | SCREW | 1 | |
| - 20 | MS20364-832C | NUT | 1 | |
| - 21 | S1021Z8-8 | SCREW | 3 | |
| | | ---*--- | | |
| | 0770043-1 | DROGUE ASSY | 1 | |
| - 22 | 0770043-2 | DROGUE | 1 | |
| - 23 | 0770043-3 | RETAINER-SPRING | 1 | |
| - 24 | 0441021 | SPRING | 1 | |
| - 25 | 0814308-2 | WIRE-TRAILING ANTENNA 100 FT LONG FOR USE WITH---- XMTR-RCVR FREQUENCY ABOVE 2400 KC | 1 | |
| - 26 | 0814308-5 | WIRE-TRAILING ANTENNA 120 FT LONG FOR USE WITH---- XMTR-RCVR FREQUENCY BELOW 2400 KC | 1 | |
| | | ATTACHING PARTS | | |
| - 27 | RA2487-2 | TERMINAL | 1 | |
| | | ---*--- | | |
| - 28 | 12509-24 | COIL ASSEMBLY | 1 | |
| | 3906-1 | COIL | 1 | |

CONTINUED ON NEXT PAGE

| FIGURE AND INDEX NO. | PART NUMBER | DESCRIPTION<br>1 2 3 4 5 6 7 | UNITS PER ASSY | USABL ON CODE |
|---|---|---|---|---|
| 6-5- | 0812509-3 | INSULATOR-COIL | 2 | |
| | 0812509-25 | SPACER | 2 | |
| | | ATTACHING PARTS | | |
| - 29 | AN515-8R18 | SCREW | 2 | |
| - 30 | MS20364-832C | NUT | 2 | |
| | | ---*--- | | |
| - 31 | 39002 | * MOTOR SWITCH ASSY | 1 | |
| | | ATTACHING PARTS | | |
| - 32 | AN515-8R10 | SCREW | 4 | |
| - 33 | MS20364-832C | NUT | 4 | |
| | | ---*--- | | |
| - 34 | 30D192A1 | CAPACITOR | 1 | |
| - 35 | | MF & HF FIXED WIRE ANTENNA INSTALLATION SEE FIGURE 8-5 | 1 | |
| | 0770630-3 | CONTROL PANEL ASSY-REEL ANTENNA WIRES NOT SUPPLIED | 1 | |
| - 36 | 0770635-1 | PLATE-CONTROL PANEL | 1 | |
| - 37 | 0770634-1 | PLATE-MOUNTING | 1 | |
| | | ATTACHING PARTS | | |
| - 38 | AN507-632R6 | SCREW | 4 | |
| | | ---*--- | | |
| - 39 | 0770634-2 | ANGLE ASSY | 2 | |
| - 40 | NAS697A06L | NUTPLATE | 4 | |
| - 41 | S1238-2-1 | SWITCH-ANTENNA SELECT | 1 | |
| | S1238-1-1 | SWITCH-TRAIL ANTENNA | 1 | |
| | | ATTACHING PARTS | | |
| - 42 | AN507-440R6 | SCREW | 4 | |
| | MS20365-440 | NUT | 4 | |
| | | ---*--- | | |
| - 43 | S1090-2 | FUSE HOLDER ASSEMBLY | 1 | |
| - 44 | S1090-11 | CAP | 1 | |
| - 45 | S1091-5 | FUSE-5A | 1 | |
| - 46 | VM-800-2 | LIGHT ASSEMBLY | 2 | |
| - 47 | VM-911M-4A | LIGHT ASSEMBLY | 1 | |
| | | ATTACHING PARTS | | |
| - 48 | NAS446-2-3 | NUT | 4 | |
| - 49 | S1021Z6-8 | SCREW | 4 | |
| | | ---*--- | | |
| - 50 | | CABLE ASSY-FROM MOTOR SW ASSY TO FIXED ANT SW ON CONTROL PANEL | N/P | |
| | RG-58A/U | COAXIAL CABLE-BULK ITEM | A/R | |
| | UG-89/U | PLUG | 1 | |
| | S1367-2-8 | TERMINAL ON SHIELD | 1 | |
| - 51 | | CABLE ASSY-ANT CURRENT SENSING UNIT TO TRAIL SW ON CONTROL PANEL | N/P | |
| | RG-58A/U | COAXIAL CABLE-BULK ITEM | A/R | |
| | UG-175/U | ADAPTER | 1 | |
| | PL-259 | * PLUG-COAXIAL | 1 | |
| - 52 | | CABLE ASSY-TRANSCEIVER TO POWER UNIT | N/P | |
| | 126-807 | * RECEPTACLE-TRANSCEIVER END 20 PINS | 1 | |
| | 126-808 | * RECEPTACLE-POWER SUPPLY END 11 PINS | 1 | |
| - 53 | | CABLE ASSY-TRANSCEIVER TO TRAIL SELECT SW CABLE ON CONTROL PANEL | N/P | |
| | RG-58A/U | COAXIAL CABLE-BULK ITEM | A/R | |
| | UG-88C/U | PLUG-COAXIAL | 1 | |
| - 54 | | CABLE ASSY-ANT REEL MOTOR TO IN-OUT REEL SW ON CONTROL PANEL | N/P | |
| - 55 | PL-112 | PLUG | 1 | |
| - 56 | MS3057-108 | CLAMP | 1 | |
| | VCM-20 | 2500 WVDC,-5% 10 UUF CAPACITOR 2 REQD IN PARALLEL FOR EACH CHANNEL ON FREQUENCIES 8.5 AND ABOVE FOR SERIES CAPACITANCE ONLY. CHANNELS 9 & 10. | A/R | |
| | | MICROPHONE INSTALLATION SEE FIGURE 9-4 | 1 | |
| | | SPEAKER INSTALLATION SEE FIGURE 9-3 | 1 | |
| | | RADIO NOISE FILTER INSTL SEE FIGURE 10-5 | 1 | |
| | | RADIO COOLING INSTL SEE FIGURE 10-1 | 1 | |

CONTINUED ON NEXT PAGE

| FIGURE AND INDEX NO. | PART NUMBER | DESCRIPTION 1 2 3 4 5 6 7 | UNITS PER ASSY | USABLE ON CODE |
|---|---|---|---|---|
| 6-5- 57 | 0770039-1 | HEADSET ASSY | 1 | |
| - 58 | R-12 1/2-75-RS34 | RHEOSTAT | 1 | |
| - 59 | S1163-2 | KNOB-RHEOSTAT | 1 | |
| - 60 | S1103-1 | PHONE JACK | 1 | |
| - 61 | S1232-15 | CIRCUIT BREAKER THRU 1963 ONLY | 1 | |
| | S1360-15 | CIRCUIT BREAKER 1964 AND ON | 1 | |
| - 62 | S1261-1 | COVER PLATE THRU 1963 ONLY | 2 | |
| - 63 | MS35489-19 | GROMMET THRU 1963 ONLY | 1 | |
| | | * ITEMS MARKED WITH ASTERISK SUPPLIED WHEN COMPLETE RADIO IS PURCHASED. | | |

PANTRONICS RADIO INSTALLATION - FIXED ANTENNA

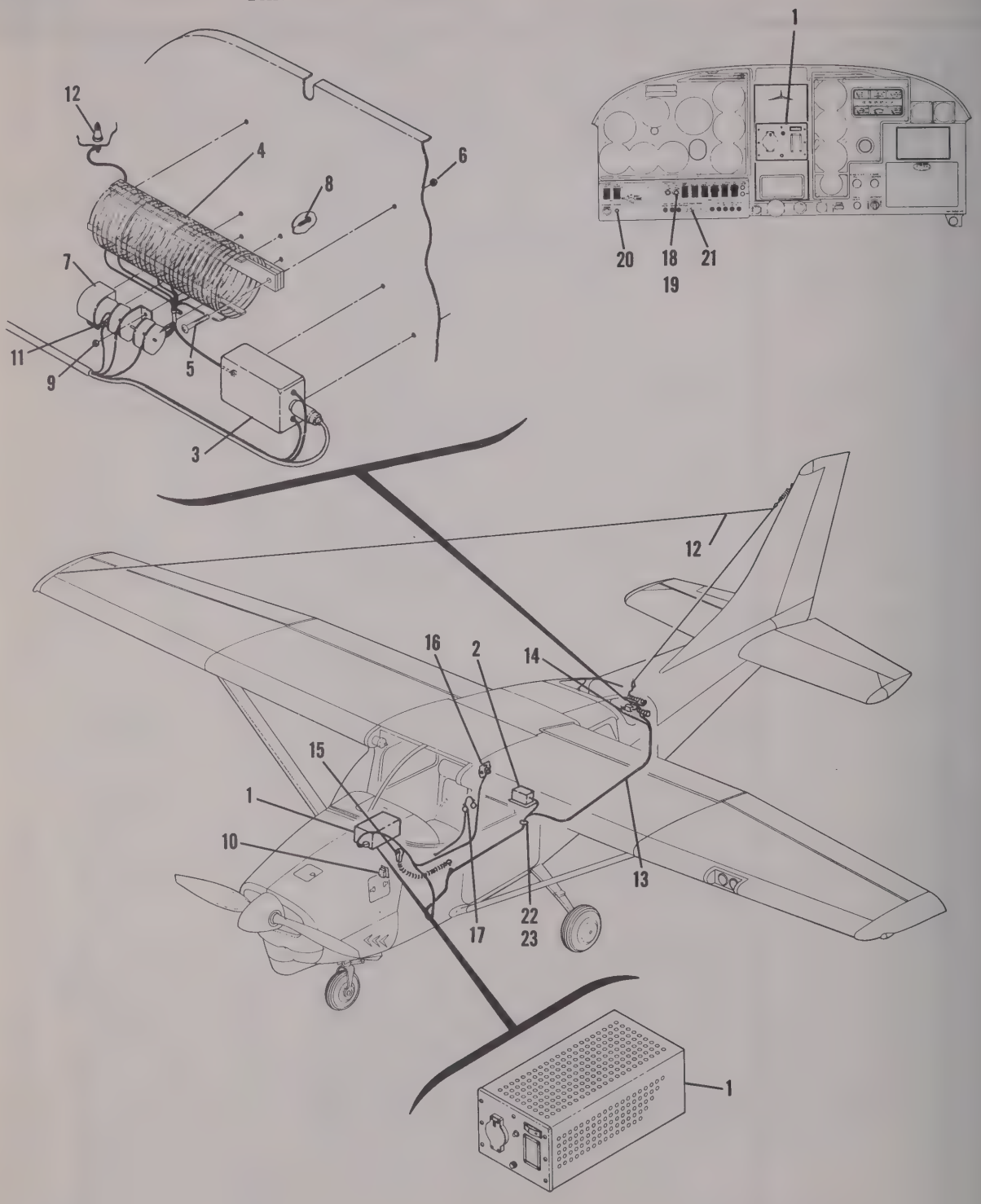


## 210 SERIAL 21058111 THRU 21058715

Figure 6-6. Pantronics (DX10-D) Radio Installation - Fixed Antenna

| FIGURE AND INDEX NO. | PART NUMBER | DESCRIPTION 1 2 3 4 5 6 7 | UNITS PER ASSY | USABLE ON CODE |
|---|---|---|---|---|
| 6-6- | | PANTRONICS RADIO INSTALLATION-FIXED ANTENNA 210 ONLY---- | N/P | |
| - 1 | DX10-D | * TRANSCEIVER---------- | 1 | |
| | | ATTACHING PARTS | | |
| | S1021Z6-8 | SCREW---------- | 4 | |
| | AN960-6 | WASHER---------- | 8 | |
| | NAS446-2-3 | NUT ---------- | 4 | |
| | | ---*--- | | |
| - 2 | DX10-PS | POWER SUPPLY---------- | 1 | |
| | | ATTACHING PARTS | | |
| | AN515-8R16 | SCREW---------- | 4 | |
| | A8K75 | RIVNUT---------- | 4 | |
| | | ---*--- | | |
| - 3 | 39001 | * ANTENNA CURRENT SENSE UNIT---------- | 1 | |
| | | ATTACHING PARTS | | |
| | AN515-6R8 | SCREW---------- | 2 | |
| | MS20364-632C | NUT ---------- | 2 | |
| | | ---*--- | | |
| - 4 | 0812509-24 | COIL ASSEMBLY---------- | 1 | |
| | 3906-1 | COIL---------- | 1 | |
| | 0812509-3 | INSULATOR-COIL---------- | 2 | |
| | 0812509-25 | SPACER---------- | 2 | |
| | | ATTACHING PARTS | | |
| - 5 | AN515-8R18 | SCREW---------- | 2 | |
| - 6 | MS20364-832C | NUT ---------- | 2 | |
| | | ---*--- | | |
| - 7 | 39002 | * MOTOR SWITCH ASSY---------- | 1 | |
| | | ATTACHING PARTS | | |
| - 8 | AN515-8R10 | SCREW---------- | 4 | |
| - 9 | S20364-832C | NUT ---------- | 4 | |
| | | ---*--- | | |
| - 10 | | RADIO NOISE FILTER INSTALLATION SEE FIGURE 10-5-------- | 1 | |
| - 11 | 30D192A1 | CAPACITOR---------- | 1 | |
| - 12 | | MF & HF FIXED WIRE ANTENNA INSTALLATION SEE FIGURE 8-5 | 1 | |
| - 13 | | CABLE ASSY-TRANSCEIVER TO POWER UNIT---------- | N/P | |
| | 126-807 | * RECEPTACLE-TRANSCEIVER END 20 PINS---------- | 1 | |
| | 126-808 | * RECEPTACLE-POWER SUPPLY END 11 PINS---------- | 1 | |
| - 14 | | CABLE ASSY-TRANSCEIVER TO ANT CURRENT SENSE UNIT CABLE-- | N/P | |
| | RG-58A/U | COAXIAL CABLE-BULK ITEM---------- | A/R | |
| | UG-88C/U | PLUG-COAXIAL---------- | 1 | |
| | | CABLE ASSY-ANT CURRENT SENSING UNIT TO TRANSCEIVER CABLE | N/P | |
| | RG-58A/U | COAXIAL CABLE-BULK ITEM---------- | A/R | |
| | UG-89/U | JACK-COAXIAL---------- | 1 | |
| | PL-259 | * PLUG-COAXIAL---------- | 1 | |
| | UG-175/U | * ADAPTER---------- | 1 | |
| | VCM-20 | 2500 WVDC,-5% 10 UUF CAPACITOR 2 REQUIRED IN PARALLEL- FOR EACH CHANNEL ON FREQUENCIES 8.5 AND ABOVE FOR SERIES CAPACITANCE ONLY. CHANNELS 9 & 10. | A/R | |
| - 15 | | MICROPHONE INSTALLATION SEE FIGURE 9-4---------- | 1 | |
| - 16 | | SPEAKER INSTALLATION SEE FIGURE 9-3---------- | 1 | |
| | | RADIO COOLING INSTALLATION SEE FIGURE 10-1---------- | 1 | |
| - 17 | 0770039-1 | HEADSET ASSY---------- | 1 | |
| - 18 | R-12 1/2-75-RS34 | RHEOSTAT---------- | 1 | |
| - 19 | S1163-2 | KNOB-RHEOSTAT---------- | 1 | |
| - 20 | S1103-1 | PHONE JACK---------- | 1 | |
| - 21 | S1232-15 | CIRCUIT BREAKER THRU 1963---------- | 1 | |
| | S1360-15 | CIRCUIT BREAKER 1964 AND ON---------- | 1 | |
| - 22 | S1261-1 | COVER PLATE THRU 1963---------- | 2 | |
| - 23 | MS35489-19 | GROMMET THRU 1963 ONLY---------- | 1 | |

* ITEMS MARKED WITH ASTERISK SUPPLIED WHEN COMPLETE RADIO IS PURCHASED.

PANTRONICS (TYPE DX10-DA) RADIO INSTALLATION - REEL & FIXED ANTENNA

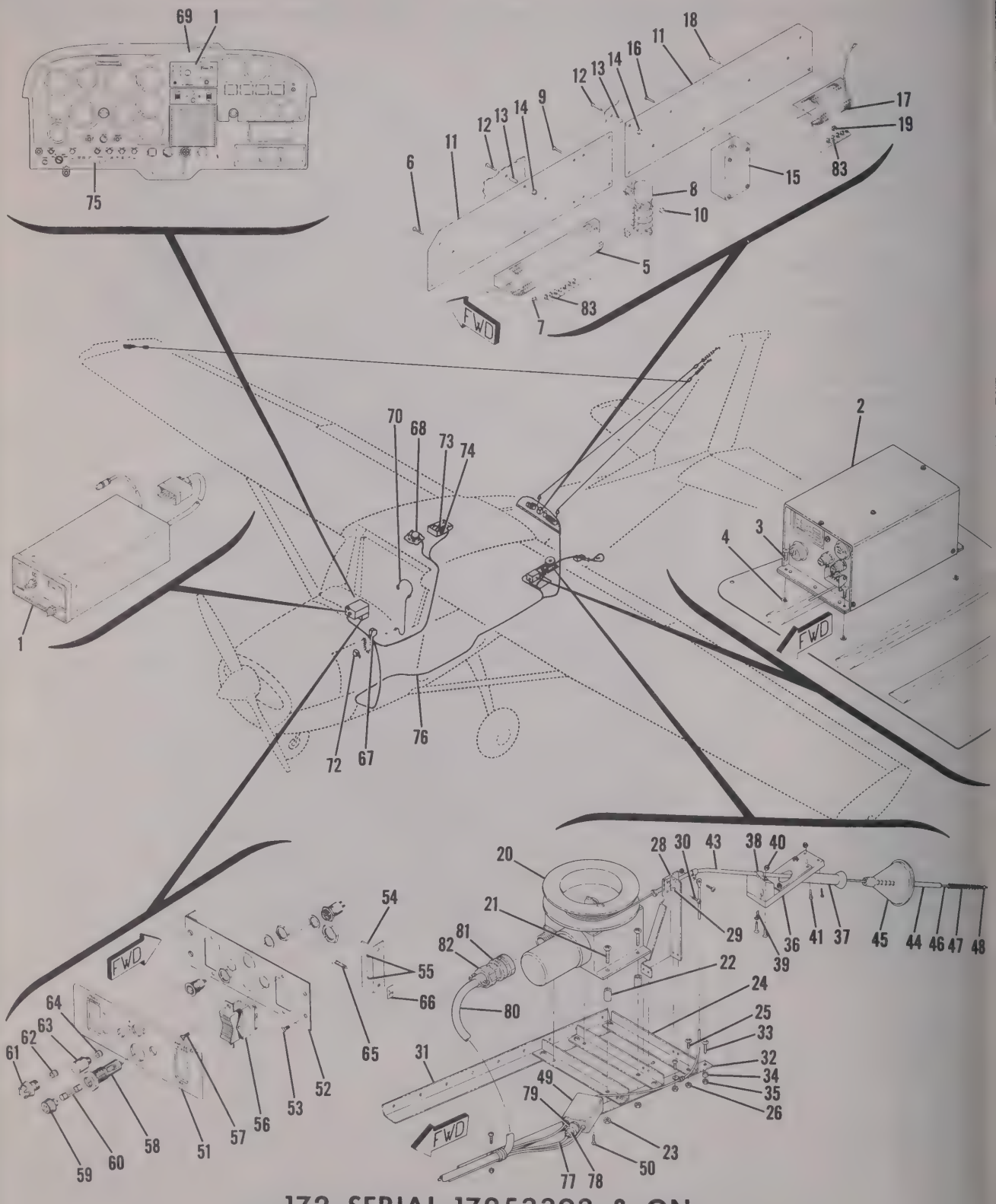


172 SERIAL 17253393 & ON

Figure 6-7. Pantronics (Type DX10-DA) Radio Installation - Reel & Fixed Antenna

| FIGURE AND INDEX NO. | PART NUMBER | DESCRIPTION<br>1 2 3 4 5 6 7 | UNITS PER ASSY | USABLE ON CODE |
|---|---|---|---|---|
| 6-7- | | PANTRONICS - TYPE DX10-DA- RADIO INSTALLATION - REEL AND FIXED ANTENNA INSTALLATIONS MODEL 172 ONLY | N/P | |
| - 1 | 39032 | TRANSCEIVER-----PNTR | 1 | |
| | | ATTACHING PARTS | | |
| | S1021Z-6-6 | SCREW | 4 | |
| | NAS446-2-3 | NUT | 4 | |
| | | ---*--- | | |
| - 2 | 39033 | REMOTE UNIT-----PNTR | 1 | |
| | | ATTACHING PARTS | | |
| - 3 | AN515-8R16 | SCREW | 4 | |
| - 4 | A8K75 | RIVNUT-----GD | 4 | |
| | | ---*--- | | |
| - 5 | 0812509-24 | LOADING COIL | 1 | |
| | | ATTACHING PARTS | | |
| - 6 | AN515-8R18 | SCREW | 2 | |
| - 7 | NAS679A08 | NUT | 2 | |
| | | ---*--- | | |
| - 8 | 126103-001 | ROTARY SELECTOR LGHI | 1 | |
| | | ATTACHING PARTS | | |
| - 9 | AN515-8R10 | SCREW | 4 | |
| - 10 | NAS679A08 | NUT | 4 | |
| | | ---*--- | | |
| - 11 | 0711137-3 | PLATE 1 REQD WHEN REEL ANT IS NOT INSTALLED - 2 REQD WHEN REEL ANT IS INSTALLED | A/R<br>N/P | |
| | | ATTACHING PARTS | | |
| - 12 | AN515-8R16 | SCREW | 6 | |
| - 13 | NAS43-3-8 | SPACER | 6 | |
| - 14 | NAS679A08 | NUT | 6 | |
| | | ---*--- | | |
| - 15 | 39001 | CURRENT SENSE UNIT USED ONLY WHEN FIXED ANTENNA IS INSTALLED WITHOUT THE REEL ANTENNA PNTR | 1 | |
| | | ATTACHING PARTS | | |
| - 16 | AN515-6R6 | SCREW | 2 | |
| | | ---*--- | | |
| - 17 | 0770727-1 | LOADING COIL | 1 | |
| | | ATTACHING PARTS | | |
| - 18 | AN515-8R18 | SCREW | 2 | |
| - 19 | NAS679A08 | NUT | 2 | |
| | | ---*--- | | |
| | | REEL INSTALLATION - TRAILING ANTENNA | | |
| - 20 | SP10010 | REEL MOTOR ASSY STAA---- ALTERNATE PART NO. IS 31-420 OR 31-420A - GARW | 1 | |
| | | ATTACHING PARTS | | |
| - 21 | AN520-10R22 | SCREW | 4 | |
| - 22 | NAS43-3-44 | SPACER | 4 | |
| - 23 | NAS679A3 | NUT | 4 | |
| | | ---*--- | | |
| - 24 | 0570035-3 | SUPPORT - REEL ANT | 3 | |
| | | ATTACHING PARTS | | |
| - 25 | AN515-8R8 | SCREW | 6 | |
| - 26 | NAS679A08 | NUT | 6 | |
| | | ---*--- | | |
| | 0570038-1 | BRACKET ASSEMBLY - GUIDE TUBE SUPPORT | 1 | |
| - 27 | 0570038-2 | BRACKET | 1 | |
| - 28 | 0570038-3 | SUPPORT | 1 | |
| | | ATTACHING PARTS | | |
| - 29 | S1485D4U | CLAMP | 1 | |
| - 30 | S1021Z8-8 | SCREW | 1 | |
| | | ---*--- | | |
| - 31 | 0570035-1 | SUPPORT | 1 | |
| - 32 | 0570035-2 | SUPPORT | 1 | |
| | | ATTACHING PARTS | | |
| - 33 | AN515-8R10 | SCREW | 2 | |
| - 34 | NAS43DD3-60 | SPACER | 2 | |
| - 35 | NAS679A08 | NUT | 2 | |
| | | ---*--- | | |

CONTINUED ON NEXT PAGE

| FIGURE AND INDEX NO. | PART NUMBER | DESCRIPTION 1 2 3 4 5 6 7 | UNITS PER ASSY | USABLE ON CODE |
|---|---|---|---|---|
| 6-7- | 0770653-8 | FAIRLEAD ASSY | 1 | |
| - 36 | 0770653-6 | MOUNTING BLOCK ASSY | 1 | |
| - 37 | 0770041-1 | PLATE ASSY - REEL ANT | 1 | |
| - 38 | AN742-D4 | CLAMP | 1 | |
| - 39 | AN515-8R12 | SCREW | 1 | |
| - 40 | NAS679A08 | NUT | 1 | |
| - 41 | AN515-6R6 | SCREW | 4 | |
| - 42 | NAS679A06 | NUT | 4 | |
| - 43 | 1270439-1 | TUBE - ANTENNA GUIDE | 1 | |
| | 0770697-1 | DROGUE ASSY | 1 | |
| - 44 | 0770697-3 | RETAINER SPRING IDENTICAL TO 0770043-3 | 1 | |
| - 45 | 0770697-2 | DROGUE | 1 | |
| - 46 | 0814308-2 | ANTENNA WIRE 100 FEET OF ANTENNA WIRE IS USED WITH TRANSCEIVERS HAVING FREQUENCIES ABOVE 2400 KC USE 0814308-5 ANTENNA WIRE - 120 FEET - IN PLACE OF 0814308-2 WITH TRANSCEIVERS HAVING FREQUENCIES BELOW 2400 KC | A/R | |
| - 47 | 0441021 | SPRING | 1 | |
| - 48 | RA2487-2 | TERMINAL | 1 | |
| - 49 | 39001 | CURRENT SENSE UNIT USE ONLY WHEN BOTH FIXED AND TRAILING ANTENNAS ARE INSTALLED PNTR | 1 | |
| | | ATTACHING PARTS | | |
| - 50 | AN515-6R6 | SCREW | 2 | |
| | | ---*--- | | |
| | 0570400-245 | CONTROL PANEL & CABLE ASSY | 1 | |
| - 51 | 0770635-1 | PLATE - CONTROL PANEL | 1 | |
| - 52 | 0770634-1 | PLATE - MOUNTING | 1 | |
| | | ATTACHING PARTS | | |
| - 53 | AN507-632R6 | SCREW | 4 | |
| | | ---*--- | | |
| - 54 | 0770634-2 | ANGLE | 2 | |
| - 55 | NAS697A06L | NUTPLATE | 4 | |
| - 56 | S1238-2-1 | SWITCH - ANTENNA SELECT | 1 | |
| | S1238-1-1 | SWITCH - TRAIL ANTENNA | 1 | |
| | | ATTACHING PARTS | | |
| - 57 | AN507-440R6 | SCREW | 4 | |
| | NAS679A04 | NUT | 4 | |
| | | ---*--- | | |
| - 58 | S1090-18 | FUSE HOLDER ASSY | 1 | |
| - 59 | S1090-19 | CAP | 1 | |
| - 60 | S1091-2 | FUSE | 1 | |
| - 61 | VM-800-4 | LIGHT ASSY MARI | 2 | |
| - 62 | NO. 300 | LAMP-----MARI | 2 | |
| - 63 | VM-911M-4A | LIGHT ASSY MARI | 1 | |
| - 64 | NO. 300 | LAMP-----MARI | 1 | |
| | | ATTACHING PARTS | | |
| - 65 | S1021Z6-8 | SCREW | 4 | |
| - 66 | NAS446-2-3 | NUT | 4 | |
| | | ---*--- | | |
| - 67 | | MICROPHONE INSTALLATION SEE FIGURE 9-4 | 1 | |
| - 68 | | SPEAKER INSTALLATION SEE FIGURE 9-3 | 1 | |
| - 69 | | TRANSMITTER SELECTOR SWITCH & AUDIO AMPLIFIER INSTL. SEE FIGURE 9-1 | A/R | |
| - 70 | | HEADSET INSTALLATION SEE FIGURE 9-5 | 1 | |
| | | RADIO COOLING INSTALLATION---- SEE FIGURE 10-1 | A/R | |
| - 71 | | H.F. ANTENNA INSTALLATION ----SEE FIGURE 8-5 | A/R | |
| - 72 | | RADIO NOISE FILTER INSTALLATION SEE FIGURE 10-5 NOT REQUIRED WHEN INSTALLED WITH A CESSNA ADF 300 | A/R | |
| - 73 | 0413126-5 | RHEOSTAT - RADIO DIAL LIGHT | 1 | |
| - 74 | S1390-3 | KNOB ASSY - RADIO RHEOSTAT | 1 | |
| - 75 | S1360-15 | CIRCUIT BREAKER TWO REQUIRED WITH REEL ANTENNA | 1 | |
| - 76 | | CABLE ASSY TRANSCEIVER TO POWER SUPPLY | N/P | |
| | 17013 | CONNECTOR - TRANSCEIVER END - 20 PINS PNTR | 1 | |
| | 17005 | CONNECTOR - POWER SUPPLY END - 11 PINS-----PNTR | 1 | |
| | HIF | FUSE - HOLDER - NOT SUPPLIED WHEN TRAILING ANT IS INSTALLED BUS | A/R | |
| | AGA-2 | FUSE - NOT USED WHEN TRAILING ANT IS INSTALLED BUS | A/R | |

CONTINUED ON NEXT PAGE

| FIGURE AND INDEX NO. | PART NUMBER | DESCRIPTION<br>1 2 3 4 5 6 7 | UNITS PER ASSY | USABLE ON CODE |
|---|---|---|---|---|
| 6-7- | | CABLE ASSY - TRANSCEIVER TO ANT SELECT SWITCH---------- | N/P | |
| | RG-58A/U | COAXIAL CABLE - BULK ITEM ---------- | A/R | |
| | UG-89/U | CONNECTOR - COAXIAL - CONNECTS TO TRANSCEIVER PLUG ---- | 1 | |
| - 77 | | CABLE ASSY - ANT SELECT SWITCH TO ANT CURRENT SENSING UNIT | N/P | |
| | | COAXIAL CABLE - BULK ITEM ---------- | A/R | |
| - 78 | PL-259 | CONNECTOR - COAXIAL - CONNECTS TO ANT SENSING UNIT ---- | 1 | |
| - 79 | UG-175/U | ADAPTER - CONNECTS TO ANT SENSING UNIT---------- | 1 | |
| | | CABLE ASSY - ANT SELECT SWITCH TO ROTARY SELECTOR CABLE---- | N/P | |
| | RG-58A/U | COAXIAL CABLE - BULK ITEM ---------- | A/R | |
| | UG-88C/U | PLUG - COAXIAL - CONNECTS TO ROTARY SELECTOR CABLE ---- | 1 | |
| | | CABLE ASSY - ROTARY SELECTOR TO FIXED ANT SW CABLE--------- | N/P | |
| | RG-58A/U | COAXIAL CABLE - BULK ITEM ---------- | A/R | |
| | UG-89/U | CONNECTOR - COAXIAL - CONNECTS TO FIXED ANT SW CABLE ---- | 1 | |
| - 80 | | CABLE ASSY - TRAIL ANT SW TO REEL ASSY ---------- | N/P | |
| - 81 | PL-112 | CONNECTOR---------- | 1 | |
| - 82 | MS3057-10B | CLAMP ---------- | 1 | |
| | | CABLE ASSY - TRANSCEIVER TO SENSING UNIT-----USED ONLY WHEN TRAILING ANTENNA IS NOT INSTALLED - SEE ITEM 15 FOR LOCATION OF SENSING UNIT | N/P | |
| | RG-58A/U | COAXIAL CABLE - BULK ITEM ---------- | A/R | |
| | UG-89/U | CONNECTOR - CONNECTS TO TRANSCEIVER ---------- | 1 | |
| | PL-259 | CONNECTOR - CONNECTS TO SENSING UNIT ---------- | 1 | |
| | UG-175/U | ADAPTER - CONNECTS TO SENSING UNIT ---------- | 1 | |
| - 83 | 235-86 | CLIP JON ---------- | A/R | |

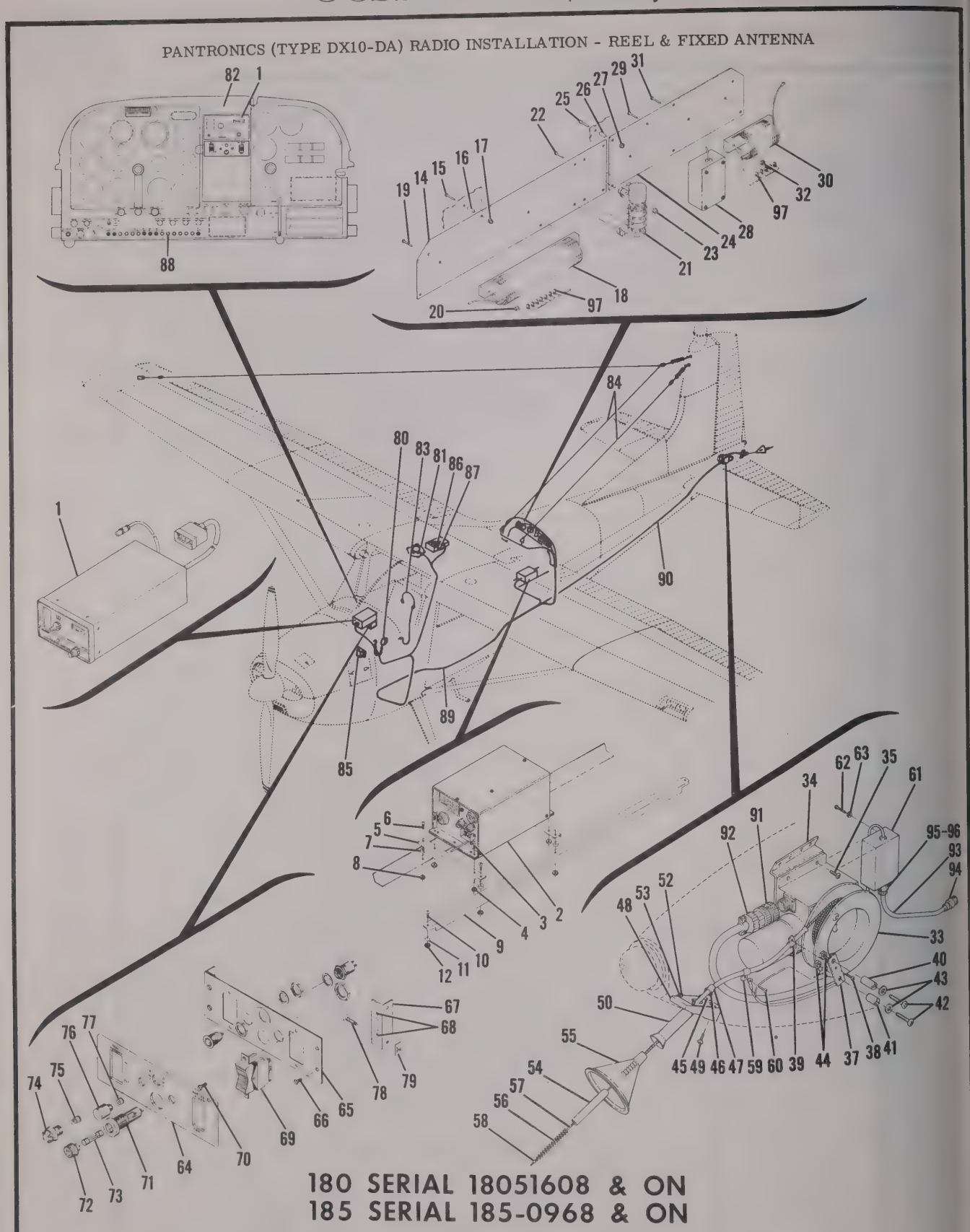


Figure 6-8. Pantronics (Type DX10-DA) Radio Installation - Reel & Fixed Antenna

| FIGURE AND INDEX NO. | PART NUMBER | DESCRIPTION<br>1 2 3 4 5 6 7 | UNITS PER ASSY | USABLE ON CODE |
|---|---|---|---|---|
| 6-8- | | PANTRONICS -TYPE DX10-DA- RADIO INSTALLATION - REEL & FIXED ANTENNA 180 & 185 ONLY | N/P | |
| - 1 | 39032 | TRANSCEIVER-----PNTR | 1 | |
| | | ATTACHING PARTS | | |
| | S1022Z6-8 | SCREW | 4 | |
| | NAS446-2-3 | NUT | 4 | |
| | | ---*--- | | |
| - 2 | 39033 | REMOTE UNIT-----PNTR | 1 | |
| | | ATTACHING PARTS | | |
| - 3 | AN515-8R10 | SCREW | 4 | |
| - 4 | NAS679A08 | NUT | 4 | |
| | | ---*--- | | |
| - 5 | 0770713-1 | ANGLE | 2 | |
| | | ATTACHING PARTS | | |
| - 6 | AN515-8R7 | SCREW | 4 | |
| - 7 | S355 | SPACER | 4 | |
| - 8 | NAS679A08 | NUT | 4 | |
| | | ---*--- | | |
| - 9 | 0770049-1 | ANGLE | 1 | |
| | | ATTACHING PARTS | | |
| - 10 | AN515-8R10 | SCREW | 2 | |
| - 11 | S355 | SPACER | 2 | |
| - 12 | NAS679A08 | NUT | 2 | |
| | | ---*--- | | |
| - 13 | 0770712-1 | ANGLE STD EQUIPMENT | REF | |
| - 14 | 0711137-1 | PLATE | 1 | |
| | | ATTACHING PARTS | | |
| - 15 | AN515-8R16 | SCREW | 6 | |
| - 16 | NAS43-3-8 | SPACER | 6 | |
| - 17 | NAS679A08 | NUT | 6 | |
| | | ---*--- | | |
| - 18 | 0812509-24 | LOADING COIL | 1 | |
| | | ATTACHING PARTS | | |
| - 19 | AN515-8R18 | SCREW | 2 | |
| - 20 | NAS679A08 | NUT | 2 | |
| | | ---*--- | | |
| - 21 | 126103-001 | ROTARY SELECTOR LGHI | 1 | |
| | 30D192A6 | CAPACITOR | 1 | |
| | | ATTACHING PARTS | | |
| - 22 | AN515-8R10 | SCREW | 4 | |
| - 23 | NAS679A08 | NUT | 4 | |
| | | ---*--- | | |
| - 24 | 0711137-2 | PLATE | 1 | |
| | | ATTACHING PARTS | | |
| - 25 | AN515-8R16 | SCREW | 6 | |
| - 26 | NAS43-3-8 | SPACER | 6 | |
| - 27 | NAS679A08 | NUT | 6 | |
| | | ---*--- | | |
| - 28 | 39001 | CURRENT SENSE UNIT PNTR USED ONLY WHEN FIXED ANTENNA INSTALLATION IS INSTALLED WITHOUT THE REEL ANTENNA | 1 | |
| | | ATTACHING PARTS | | |
| - 29 | AN515-6R6 | SCREW | 2 | |
| | | ---*--- | | |
| - 30 | 0770727-1 | LOADING COIL | 1 | |
| | | ATTACHING PARTS | | |
| - 31 | AN515-8R18 | SCREW | 2 | |
| - 32 | NAS679A08 | NUT | 2 | |
| | | ---*--- | | |
| | | REEL INSTALLATION - TRAILING ANTENNA | N/P | |
| - 33 | SP10010 | REEL MOTOR ASSY - STAA ALTERNATE PART NO. IS 31-420 OR 31-420A - GARW | 1 | |
| | | ATTACHING PARTS | | |
| - 34 | 0770004-22 | BRACKET | 1 | |
| | NAS696A3K | NUTPLATE | 4 | |
| - 35 | AN520-10R8 | SCREW | 4 | |
| | | ---*--- | | |

CONTINUED ON NEXT PAGE

| FIGURE AND INDEX NO. | PART NUMBER | DESCRIPTION 1 2 3 4 5 6 7 | UNITS PER ASSY | USABLE ON CODE |
|---|---|---|---|---|
| 6-8- 36 | 0770015-7 | TUBE - ANTENNA | 1 | |
| - 37 | 0770004-24 | SUPPORT - RF INSUL | 1 | |
| | | ATTACHING PARTS | | |
| - 38 | S1021Z8-8 | SCREW | 1 | |
| - 39 | S1485-4U | CLAMP | 1 | |
| - 40 | NAS43-3-36 | SPACER | 1 | |
| - 41 | NAS43-3-22 | SPACER | 1 | |
| - 42 | AN520-10R24 | SCREW | 2 | |
| - 43 | S355-1 | SPACER | 2 | |
| - 44 | NAS679A3 | NUT | 2 | |
| | | ---*--- | | |
| - 45 | 0770015-9 | SUPPORT - ANTENNA GUIDE | 1 | |
| | | ATTACHING PARTS | | |
| - 46 | S1021Z8-6 | SCREW | 1 | |
| - 47 | S1458-4-24A | CLAMP | 1 | |
| | S1021Z8-8 | SCREW | 1 | |
| | | ---*--- | | |
| - 48 | 0770044-1 | MOUNTING BLOCK | 1 | |
| | | ATTACHING PARTS | | |
| - 49 | S1021Z8-8 | SCREW | 2 | |
| | | ---*--- | | |
| - 50 | 0770041-1 | PLATE ASSY | 1 | |
| | | ATTACHING PARTS | | |
| - 51 | AN515-6R18 | SCREW | 2 | |
| - 52 | AN515-6R8 | SCREW | 2 | |
| - 53 | NAS679A06 | NUT | 4 | |
| | | ---*--- | | |
| | 0770697-1 | DROGUE ASSY | 1 | |
| - 54 | 0770697-3 | RETAINER SPRING IDENTICAL TO 0770043-3 | 1 | |
| - 55 | 0770697-2 | DROGUE | 1 | |
| - 56 | 0441021 | SPRING | 1 | |
| - 57 | 0814308-2 | ANTENNA WIRE 100 FEET OF ANTENNA WIRE IS USED WITH TRANSCEIVERS HAVING FREQUENCIES ABOVE 2400 KC USE 0814308-5 ANTENNA WIRE - 120 FEET - IN PLACE OF 0814308-2 WITH TRANSCEIVERS HAVING FREQUENCIES BELOW 2400 KC | A/R | |
| - 58 | RA-2487-2 | TERMINAL | 1 | |
| - 59 | S1485-4U | CLAMP | 1 | |
| - 60 | S1021Z8-8 | SCREW | 1 | |
| - 61 | 39001 | SENSE UNIT USED ONLY WHEN BOTH FIXED AND TRAILING ANTENNAS ARE INSTALLED | 1 | |
| | | ATTACHING PARTS | | |
| - 62 | AN515-6R8 | SCREW | 2 | |
| - 63 | S355 | SPACER | 2 | |
| | | ---*--- | | |
| | 0770400-233 | CONTROL PANEL & CABLE ASSY | 1 | |
| - 64 | 0770635-1 | PLATE - CONTROL PANEL | 1 | |
| - 65 | 0770634-1 | PLATE - MOUNTING | 1 | |
| | | ATTACHING PARTS | | |
| - 66 | AN507-632R6 | SCREW | 4 | |
| | | ---*--- | | |
| - 67 | 0770634-2 | ANGLE | 2 | |
| - 68 | NAS697A06L | NUTPLATE | 4 | |
| - 69 | S1238-2-1 | SWITCH - ANTENNA SELECT | 1 | |
| | S1238-1-1 | SWITCH - TRAIL ANTENNA | 1 | |
| | | ATTACHING PARTS | | |
| - 70 | AN507-440R6 | SCREW | 4 | |
| | NAS679A04 | NUT | 4 | |
| | | ---*--- | | |
| - 71 | S1090-18 | FUSE HOLDER ASSY | 1 | |
| - 72 | S1090-19 | CAP | 1 | |
| - 73 | S1091-2 | FUSE | 1 | |
| - 74 | VM-800-2 | LIGHT ASSY MARI | 2 | |
| - 75 | NO. 300 | LAMP-----MARI | 2 | |
| - 76 | VM-911M-4A | LIGHT ASSY MARI | 1 | |
| - 77 | NO. 300 | LAMP-----MARI | 1 | |
| | | ATTACHING PARTS | | |
| - 78 | S1021Z6-8 | SCREW | 4 | |
| - 79 | NAS446-2-3 | NUT | 4 | |
| | | ---*--- | | |

CONTINUED ON NEXT PAGE

| FIGURE AND INDEX NO. | PART NUMBER | DESCRIPTION 1 2 3 4 5 6 7 | UNITS PER ASSY | USABLE ON CODE |
|---|---|---|---|---|
| 6-8- 80 | | MICROPHONE INSTALLATION SEE FIGURE 9-4 | 1 | |
| - 81 | | SPEAKER INSTALLATION SEE FIGURE 9-3 | 1 | |
| - 82 | | TRANSMITTER SELECTOR SWITCH & AUDIO AMPLIFIER INSTL SEE FIGURE 9-1 | A/R | |
| - 83 | | HEADSET INSTALLATION SEE FIGURE 9-5 | 1 | |
| | | RADIO COOLING INSTALLATION SEE FIGURE 10-1 | A/R | |
| - 84 | | H.F. ANTENNA INSTALLATION SEE FIGURE 8-5 | A/R | |
| - 85 | | RADIO NOISE FILTER INSTALLATION SEE FIGURE 10-5 NOT REQUIRED WHEN INSTALLED WITH A CESSNA ADF 300 | A/R | |
| - 86 | 0413126-5 | RHEOSTAT - RADIO DIAL LIGHT | 1 | |
| - 87 | S1390-3 | KNOB ASSY - RADIO RHEOSTAT | 1 | |
| - 88 | S1360-15 | CIRCUIT BREAKER TWO REQUIRED WITH REEL ANTENNA | 1 | |
| - 89 | | CABLE ASSEMBLY TRANSCEIVER TO POWER SUPPLY | N/P | |
| | 17013 | CONNECTOR - TRANSCEIVER END - 20 PINS PNTR | 1 | |
| | 17005 | CONNECTOR - POWER SUPPLY END - 11 PINS PNTR | 1 | |
| | HIF | FUSE HOLDER - NOT USED WHEN TRAILING ANT IS INSTALLED BUS | A/R | |
| | AGA-2 | FUSE - NOT USED WHEN TRAILING ANT IS INSTALLED BUS | A/R | |
| | | CABLE ASSY - TRANSCEIVER TO ANT SELECT SWITCH | N/P | |
| | RG-58A/U | COAXIAL CABLE - BULK ITEM | A/R | |
| | UG-491A/U | ADAPTER - CONNECTS TO TRANSCEIVER END | 1 | |
| - 90 | | CABLE ASSY - REEL MOTOR TO RECEPTACLE ON ANT CONTROL PANEL | N/P | |
| - 91 | PL-112 | CONNECTOR - CONNECTS TO REEL MOTOR | 1 | |
| - 92 | MS3057-10B | CLAMP - CONNECTS TO REEL MOTOR | 1 | |
| | MS3106A-20-15P | PLUG - CONNECTS TO ANT CONTROL PANEL | 1 | |
| | MS3057-12B | CLAMP - CONNECTS TO ANT CONTROL PANEL | 1 | |
| | | CABLE ASSY - ANT CONTROL PANEL TO ANT SENSING UNIT PLUG | N/P | |
| | RG-58A/U | COAXIAL CABLE - BULK ITEM | A/R | |
| | UG-291/U | SACK - CONNECTS TO ANT SENSING UNIT PLUG | 1 | |
| | S1367-1-10 | TERMINAL - CONNECTS TO TRAIL SW | 1 | |
| | | CABLE ASSY - ANTENNA SENSING UNIT TO TRAIL ANTENNA SWITCH CABLE | N/P | |
| - 93 | RG-58A/U | COAXIAL CABLE - BULK ITEM | A/R | |
| - 94 | UG-88C/U | CONNECTOR - CONNECTS TO ANT SW CABLE | 1 | |
| - 95 | UG-175/U | ADAPTER - CONNECTS TO SENSING UNIT | 1 | |
| - 96 | PL-259 | CONNECTOR - CONNECTS TO SENSING UNIT | 1 | |
| | | CABLE ASSY - ANT CONTROL PANEL TO ROTARY SELECTOR SWITCH | N/P | |
| | RG-58A/U | COAXIAL CABLE - BULK ITEM | A/R | |
| | UG-88C/U | CONNECTOR - CONNECTS TO ROTARY SELECTOR SWITCH CONNECTOR | 1 | |
| | | CABLE ASSY - ROTARY SELECTOR SWITCH TO FIXED ANTENNA SWITCH CABLE | N/P | |
| | RG-58A/U | COAXIAL CABLE - BULK ITEM | A/R | |
| | UG-89/U | CONNECTOR - CONNECTS TO FIXED ANTENNA SWITCH CABLE | 1 | |
| | S1367-2-8 | TERMINAL - CONNECTS TO ROTARY SELECTOR SWITCH | 1 | |
| | | CABLE ASSY - TRANSCEIVER TO SENSING UNIT - USED ONLY WHEN TRAILING ANTENNA IS NOT INSTALLED - SEE ITEM 28 FOR LOCATION OF SENSING UNIT | N/P | |
| | RG-58A/U | COAXIAL CABLE - BULK ITEM | A/R | |
| | UG-89/U | CONNECTOR - CONNECTS TO TRANSCEIVER | 1 | |
| | PL-259 | CONNECTOR - CONNECTS TO SENSING UNIT | 1 | |
| | UG-175U | ADAPTER - CONNECTS TO SENSING UNIT | 1 | |
| - 97 | 235-86 | CLIP JON | A/R | |

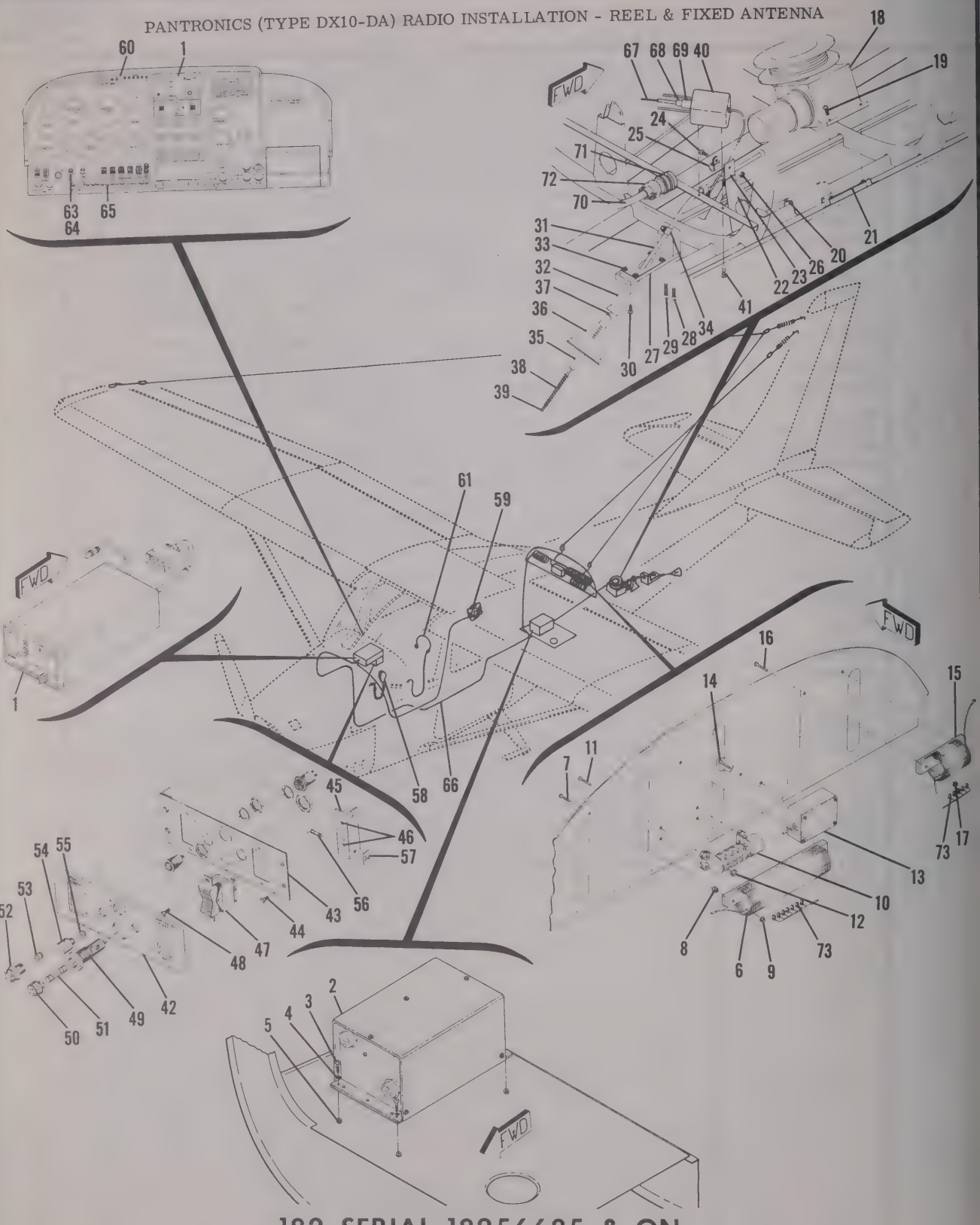


Figure 6-9. Pantronics (Type DX10-DA) Radio Installation - Reel & Fixed Antenna

| FIGURE AND INDEX NO. | PART NUMBER | DESCRIPTION<br>1 2 3 4 5 6 7 | UNITS PER ASSY | USABLE ON CODE |
|---|---|---|---|---|
| 6-9- | | PANTRONICS -TYPE DX10-DA- RADIO INSTALLATION - REEL AND FIXED ANTENNA 182 ONLY | N/P | |
| - 1 | 39032 | TRANSCEIVER-----PNTR | 1 | |
| | | ATTACHING PARTS | | |
| | S1022Z6-6 | SCREW | 4 | |
| | NAS446-2-3 | NUT | 4 | |
| | | ---*--- | | |
| - 2 | 39033 | REMOTE UNIT-----PNTR | 1 | |
| | | ATTACHING PARTS | | |
| - 3 | AN515-8R8 | SCREW | 4 | |
| - 4 | AN936-A8 | WASHER | 4 | |
| - 5 | A8K75 | RIVNUT-----GD | 4 | |
| | | ---*--- | | |
| - 6 | 0812509-24 | LOADING COIL | 1 | |
| | | ATTACHING PARTS | | |
| - 7 | AN515-8R20 | SCREW | 2 | |
| - 8 | S355 | WASHER | 2 | |
| - 9 | NAS679A08 | NUT | 2 | |
| | | ---*--- | | |
| - 10 | 126103-001 | ROTARY SELECTOR LGHI | 1 | |
| | 30D192A6 | CAPACITOR | 1 | |
| | | ATTACHING PARTS | | |
| - 11 | AN515-8R10 | SCREW | 2 | |
| - 12 | NAS679A08 | NUT | 2 | |
| | | ---*--- | | |
| - 13 | 39001 | CURRENT SENSING UNIT PNTR USED ONLY WHEN FIXED ANTENNA INSTALLATION IS INSTALLED WITHOUT THE REEL ANTENNA | 1 | |
| | | ATTACHING PARTS | | |
| - 14 | AN515-6R6 | SCREW | 2 | |
| | | ---*--- | | |
| - 15 | 0770727-1 | LOADING COIL USED ONLY WHEN FREQUENCIES OF 9 MEGACYCLES AND ABOVE ARE USED | 1 | |
| | | ATTACHING PARTS | | |
| - 16 | AN515-8R18 | SCREW | 2 | |
| - 17 | NAS679A08 | NUT | 2 | |
| | | ---*--- | | |
| | | REEL INSTALLATION-TRAILING ANTENNA | N/P | |
| - 18 | SP10010 | REEL MOTOR ASSY - STAA ALTERNATE PART NO. IS 31-420 OR 31-420A - GARW | 1 | |
| | | ATTACHING PARTS | | |
| - 19 | AN4-4A | BOLT | 4 | |
| | | ---*--- | | |
| - 20 | 0770639-1 | BRACKET ASSY - INBOARD | 1 | |
| - 21 | 0770639-2 | BRACKET ASSY - OUTBOARD | 1 | |
| - 22 | 0770656-2 | TUBE SUPPORT ASSY | 1 | |
| - 23 | 0770656-5 | PLATE INSULATOR | 1 | |
| | | ATTACHING PARTS | | |
| - 24 | AN515-8R8 | SCREW | 1 | |
| - 25 | AN742D4 | CLAMP | 1 | |
| - 26 | NAS679A08 | NUT | 1 | |
| | | ---*--- | | |
| | 0770653-1 | FAIRLEAD ASSY | 1 | |
| - 27 | 0770653-6 | MOUNTING BLOCK ASSY | 1 | |
| - 28 | AN507-832R8 | SCREW | 1 | |
| - 29 | AN507-832R10 | SCREW | 1 | |
| | | ATTACHING PARTS | | |
| - 30 | S1021Z8-8 | SCREW | 3 | |
| | | ---*--- | | |
| - 31 | 0770654-1 | TUBE ANTENNA GUIDE | 1 | |
| - 32 | 0770041-1 | PLATE ASSY - REEL ANT | 1 | |
| | | ATTACHING PARTS | | |
| - 33 | AN515-6R6 | SCREW | 4 | |
| | NAS679A06 | NUT | 4 | |
| | | ---*--- | | |

CONTINUED ON NEXT PAGE

| FIGURE AND INDEX NO. | PART NUMBER | DESCRIPTION 1 2 3 4 5 6 7 | UNITS PER ASSY | USABLE ON CODE |
|---|---|---|---|---|
| 6-9- 34 | AN742-D4 | CLAMP | 1 | |
| | | ATTACHING PARTS | | |
| | AN515-8R12 | SCREW | 1 | |
| | NAS679A08 | NUT | 1 | |
| | | ---*--- | | |
| | 0770697-1 | DROGUE ASSY | 1 | |
| - 35 | 0770697-3 | RETAINER SPRING IDENTICAL TO 0770043-3 | 1 | |
| - 36 | 0770697-2 | DROGUE | 1 | |
| - 37 | 0814308-2 | ANTENNA WIRE 100 FEET OF ANTENNA WIRE IS USED WITH TRANSCEIVERS HAVING FREQUENCIES ABOVE 2400 KC USE 0814308-5 ANTENNA WIRE -120 FEET- IN PLACE OF 0814308-2 WITH TRANCEIVERS HAVING FREQUENCIES BELOW 2400 KC | A/R | |
| - 38 | 0441021 | SPRING | 1 | |
| - 39 | RA2487-2 | TERMINAL | 1 | |
| - 40 | 39001 | CURRENT SENSING UNIT USED ONLY WHEN BOTH FIXED AND TRAILING ANTENNAS ARE INSTALLED PNTR | 1 | |
| | | ATTACHING PARTS | | |
| - 41 | AN515-6R6 | SCREW | 2 | |
| | | ---*--- | | |
| | 0770750-230 | CONTROL PANEL & CABLE ASSY | 1 | |
| - 42 | 0770635-1 | PLATE - CONTROL PANEL | 1 | |
| - 43 | 0770634-1 | PLATE - MOUNTING | 1 | |
| | | ATTACHING PARTS | | |
| - 44 | AN507-632R6 | SCREW | 4 | |
| | | ---*--- | | |
| - 45 | 0770634-2 | ANGLE | 2 | |
| - 46 | NAS697A06L | NUTPLATE | 4 | |
| - 47 | S1238-2-1 | SWITCH - ANTENNA SELECT | 1 | |
| | S1238-1-1 | SWITCH - TRAIL ANTENNA | 1 | |
| | | ATTACHING PARTS | | |
| - 48 | AN507-440R6 | SCREW | 4 | |
| | NAS679A04 | NUT | 4 | |
| | | ---*--- | | |
| - 49 | S1090-18 | FUSE HOLDER ASSY | 1 | |
| - 50 | S1090-19 | CAP | 1 | |
| - 51 | S1091-2 | FUSE | 1 | |
| - 52 | VM-800-4 | LIGHT ASSY MARI | 2 | |
| - 53 | NO. 300 | LAMP-----MARI | 2 | |
| - 54 | VM-911M-4A | LIGHT ASSY MARI | 1 | |
| - 55 | NO. 300 | LAMP-----MARI | 1 | |
| | | ATTACHING PARTS | | |
| - 56 | S1021Z6-8 | SCREW | 4 | |
| - 57 | NAS446-2-3 | NUT | 4 | |
| | | ---*--- | | |
| - 58 | | MICROPHONE INSTALLATION SEE FIGURE 9-4 | 1 | |
| - 59 | | SPEAKER INSTALLATION SEE FIGURE 9-3 | 1 | |
| - 60 | | TRANSMITTER SELECTOR SWITCH & AUDIO AMPLIFIER INSTL. SEE FIGURE 9-1 | A/R | |
| - 61 | | HEADSET INSTALLATION SEE FIGURE 9-5 | 1 | |
| | | RADIO COOLING INSTALLATION---- SEE FIGURE 10-1 | A/R | |
| - 62 | | H.F. ANTENNA INSTALLATION ----SEE FIGURE 8-5 | A/R | |
| | | RADIO NOISE FILTER INSTALLATION SEE FIGURE 10-5 NOT REQUIRED WHEN INSTALLED WITH A CESSNA ADF 300 | A/R | |
| - 63 | R-12 1/2-75-RS34 | RHEOSTAT - RADIO DIAL LIGHT | 1 | |
| - 64 | S1163-2 | KNOB ASSY - RADIO RHEOSTAT | 1 | |
| - 65 | S1360-15 | CIRCUIT BREAKER TWO REQUIRED WITH REEL ANTENNA | 1 | |
| - 66 | | CABLE ASSY TRANSCEIVER TO POWER SUPPLY | N/P | |
| | 17013 | CONNECTOR - TRANSCEIVER END - 20 PINS PNTR | 1 | |
| | 17005 | CONNECTOR - POWER SUPPLY END - 11 PINS-----PNTR | 1 | |
| | HIF | FUSE-HOLDER - NOT USED WHEN TRAILING ANT IS INSTALLED BUS | A/R | |
| | AGA-2 | FUSE - NOT USED WHEN TRAILING ANT IS INSTALLED BUS | A/R | |

CONTINUED ON NEXT PAGE

| FIGURE AND INDEX NO. | PART NUMBER | DESCRIPTION<br>1 2 3 4 5 6 7 | UNITS PER ASSY | USABLE ON CODE |
|---|---|---|---|---|
| 6-9- | | CABLE ASSY - TRANSCEIVER TO ANT SELECT SWITCH---------- | N/P | |
| | RG-58A/U | COAXIAL CABLE - BULK ITEM ---------- | A/R | |
| | UG-89/U | CONNECTOR - COAXIAL - CONNECTS TO TRANSCEIVER PLUG ---- | 1 | |
| - 67 | | CABLE ASSY - ANT SELECT SWITCH TO ANT CURRENT SENSING UNIT | N/P | |
| | RG-58A/U | COAXIAL CABLE - BULK ITEM ---------- | A/R | |
| - 68 | PL-259 | CONNECTOR - COAXIAL - CONNECTS TO ANT SENSING UNIT ---- | 1 | |
| - 69 | UG-175/U | ADAPTER - CONNECTS TO ANT SENSING UNIT---------- | 1 | |
| | | CABLE ASSY - ANT SELECT SWITCH TO ROTARY SELECTOR CABLE---- | N/P | |
| | RG-58A/U | COAXIAL CABLE - BULK ITEM ---------- | A/R | |
| | UG-88C/U | PLUG - COAXIAL - CONNECTS TO ROTARY SELECTOR CABLE ---- | 1 | |
| | | CABLE ASSY - ROTARY SELECTOR TO FIXED ANT SW CABLE--------- | N/P | |
| | RG-58A/U | COAXIAL CABLE - BULK ITEM ---------- | A/R | |
| | UG-89/U | CONNECTOR - COAXIAL - CONNECTS TO FIXED ANT SW CABLE ---- | 1 | |
| - 70 | | CABLE ASSY - TRAIL ANT SW TO REEL ASSY ---------- | N/P | |
| - 71 | PL-112 | CONNECTOR---------- | 1 | |
| - 72 | MS3057-10B | CLAMP ---------- | 1 | |
| | | CABLE ASSY - TRANSCEIVER TO SENSING UNIT-----USED ONLY ---- | N/P | |
| | | WHEN TRAILING ANTENNA IS NOT INSTALLED - SEE ITEM 13 FOR LOCATION OF SENSING UNIT | | |
| | RG-58A/U | COAXIAL CABLE - BULK ITEM ---------- | A/R | |
| | UG-89/U | CONNECTOR - CONNECTS TO TRANSCEIVER ---------- | 1 | |
| | PL-259 | CONNECTOR - CONNECTS TO SENSING UNIT ---------- | 1 | |
| | UG-175/U | ADAPTER - CONNECTS TO SENSING UNIT ---------- | 1 | |
| - 73 | 235-86 | CLIP JON ---------- | A/R | |

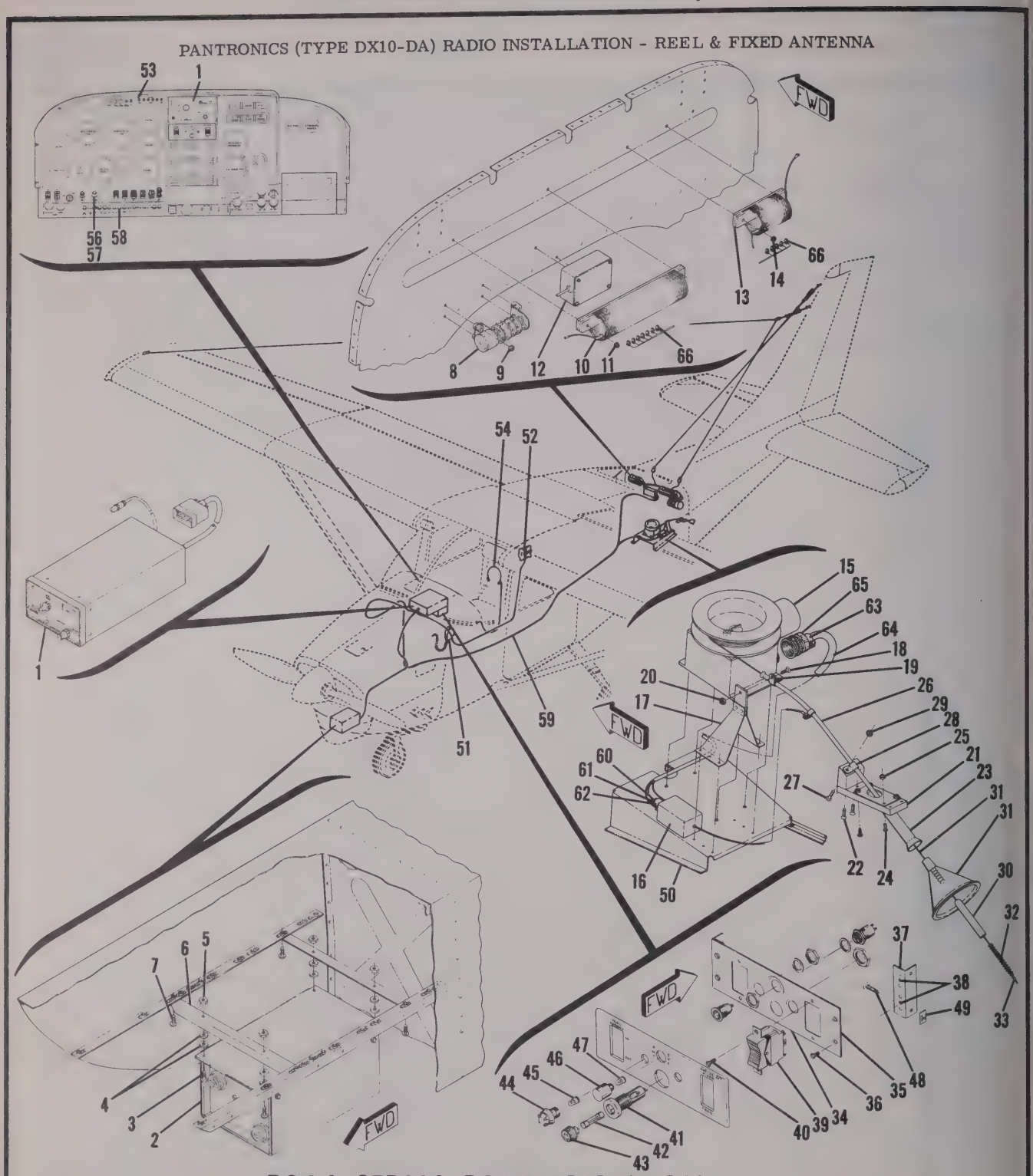


**P206 SERIAL P206-0161 & ON**
**U206 SERIAL U206-0438 & ON**
**TP206 SERIAL TP206-0161 & ON**
**TU206 SERIAL TU206-0438 & ON**

Figure 6-10. Pantronics (Type DX10-DA) Radio Installation - Reel & Fixed Antenna

| FIGURE AND INDEX NO. | PART NUMBER | DESCRIPTION<br>1 2 3 4 5 6 7 | UNITS PER ASSY | USABLE ON CODE |
|---|---|---|---|---|
| 6-10- | | PANTRONICS -DX10-DA- RADIO INSTALLATION - REEL AND FIXED ANTENNA P206, TP206, U206 & TU206 | N/P | |
| - 1 | 39032 | TRANSCEIVER-----PNTR | 1 | |
| | | ATTACHING PARTS | | |
| | S1022Z6-6 | SCREW | 4 | |
| | NAS446-2-3 | NUT | 4 | |
| | | ---*--- | | |
| - 2 | 39033 | REMOTE UNIT-----PNTR | 1 | |
| | | ATTACHING PARTS | | |
| - 3 | AN515-8R12 | SCREW | 4 | |
| - 4 | S355-2 | SPACER | 4 | |
| - 5 | NAS679A08 | NUT | 8 | |
| | | ---*--- | | |
| - 6 | 1270627-89 | ATTACH ANGLE | 2 | |
| | | ATTACHING PARTS | | |
| - 7 | AN520-10R6 | SCREW | 4 | |
| | | ---*--- | | |
| - 8 | 126103-001 | ROTARY SELECTOR LGHI | 1 | |
| | 30D192A6 | CAPACITOR | 1 | |
| | | ATTACHING PARTS | | |
| | AN515-8R10 | SCREW | 4 | |
| - 9 | NAS679A08 | NUT | 4 | |
| - 10 | 0812509-24 | LOADING COIL | 1 | |
| | | ATTACHING PARTS | | |
| | AN515-8R18 | SCREW | 2 | |
| - 11 | NAS679A08 | NUT | 2 | |
| | | ---*--- | | |
| - 12 | 39001 | CURRENT SENSE UNIT USED ONLY WHEN FIXED ANTENNA IS INSTALLED WITHOUT THE REEL ANTENNA PNTR | 1 | |
| | | ATTACHING PARTS | | |
| | AN515-6R6 | SCREW | 2 | |
| | | ---*--- | | |
| - 13 | 0770727-1 | LOADING COIL USED ONLY WHEN FREQUENCIES OF 9 MEGACYCLES AND ABOVE ARE INSTALLED | 1 | |
| | | ATTACHING PARTS | | |
| | AN515-8R18 | SCREW | 2 | |
| - 14 | NAS679A08 | NUT | 2 | |
| | | ---*--- | | |
| | | REEL INSTALLATION - TRAILING ANTENNA | N/P | |
| - 15 | SP10010 | REEL MOTOR ASSY - STAA ALTERNATE PART NO. IS 31-420 OR 31-420A - GARW | 1 | |
| | | ATTACHING PARTS | | |
| | AN520-416R8 | SCREW | 4 | |
| | | ---*--- | | |
| - 16 | 1270635-1 | SUPPORT ASSY | 1 | |
| - 17 | 1270440-1 | TUBE SUPPORT ASSY | 1 | |
| | | ATTACHING PARTS | | |
| - 18 | AN515-8R8 | SCREW | 1 | |
| - 19 | AN742D4 | CLAMP | 1 | |
| - 20 | NAS679A08 | NUT | 1 | |
| | | ---*--- | | |
| | 0770653-2 | FAIRLEAD ASSY | 1 | |
| - 21 | 0770653-7 | MOUNTING BLOCK ASSY | 1 | |
| - 22 | AN507-832R10 | SCREW | 2 | |
| - 23 | 0770041-1 | PLATE ASSY | 1 | |
| | | ATTACHING PARTS | | |
| - 24 | AN515-6R6 | SCREW | 4 | |
| - 25 | NAS679A06 | NUT | 4 | |
| | | ---*--- | | |
| - 26 | 1270439-1 | TUBE - ANTENNA GUIDE | 1 | |
| | | ATTACHING PARTS | | |
| - 27 | AN515-8R12 | SCREW | 1 | |
| - 28 | AN742-D4 | CLAMP | 1 | |
| - 29 | NAS679A06 | NUT | 1 | |
| | | ---*--- | | |

CONTINUED ON NEXT PAGE

| FIGURE AND INDEX NO. | PART NUMBER | DESCRIPTION<br>1 2 3 4 5 6 7 | UNITS PER ASSY | USABLE ON CODE |
|---|---|---|---|---|
| 6-10- | 0770697-1 | DROGUE ASSY | 1 | |
| - 30 | 0770697-3 | RETAINER-SPRING | 1 | |
| - 31 | 0770697-2 | DROGUE | 1 | |
| -31A | 0814308-2 | ANTENNA WIRE 100 FEET OF ANTENNA WIRE IS USED WITH TRANSCEIVERS HAVING FREQUENCIES ABOVE 2400 KC USE 0814308-5 ANTENNA WIRE -120 FEET- IN PLACE OF 0814308-2 WITH TRANSCEIVERS HAVING FREQUENCIES BELOW 2400 KC | A/R | |
| - 32 | 0441021 | SPRING | 1 | |
| - 33 | RA2487-2 | TERMINAL | 1 | |
| | 1270675-230 | CONTROL PANEL & CABLE ASSY | 1 | |
| - 34 | 0770635-1 | PLATE - CONTROL PANEL | 1 | |
| - 35 | 0770634-1 | PLATE - MOUNTING | 1 | |
| | | ATTACHING PARTS | | |
| - 36 | AN507-632R6 | SCREW | 4 | |
| | | ---*--- | | |
| - 37 | 0770634-2 | ANGLE | 2 | |
| - 38 | NAS697A06L | NUTPLATE | 4 | |
| - 39 | S1238-2-1 | SWITCH - ANTENNA SELECT | 1 | |
| | S1238-1-1 | SWITCH - TRAIL ANTENNA | 1 | |
| | | ATTACHING PARTS | | |
| - 40 | AN507-440R6 | SCREW | 4 | |
| | NAS679A04 | NUT | 4 | |
| | | ---*--- | | |
| - 41 | S1090-18 | FUSE HOLDER ASSY | 1 | |
| - 42 | S1090-19 | CAP | 1 | |
| - 43 | S1091-2 | FUSE | 1 | |
| - 44 | VM-800-4 | LIGHT ASSY MARI | 2 | |
| - 45 | NO. 300 | LAMP-----MARI | 2 | |
| - 46 | VM-911M-4A | LIGHT ASSY MARI | 1 | |
| - 47 | NO. 300 | LAMP-----MARI | 1 | |
| | | ATTACHING PARTS | | |
| - 48 | S1021Z6-8 | SCREW | 4 | |
| - 49 | NAS446-2-3 | NUT | 4 | |
| | | ---*--- | | |
| - 50 | 39001 | CURRENT SENSE UNIT USED IN PLACE OF ITEM 12 WHEN TRAILING ANTENNA IS INSTALLED PNTR | 1 | |
| | | ATTACHING PARTS | | |
| | AN515-6R6 | SCREW | 2 | |
| | | ---*--- | | |
| - 51 | | MICROPHONE INSTALLATION SEE FIGURE 9-4 | 1 | |
| - 52 | | SPEAKER INSTALLATION SEE FIGURE 9-3 | 1 | |
| - 53 | | TRANSMITTER SELECTOR SWITCH & AUDIO AMPLIFIER INSTL. SEE FIGURE 9-1 | A/R | |
| - 54 | | HEADSET INSTALLATION SEE FIGURE 9-5 | 1 | |
| | | RADIO COOLING INSTALLATION---- SEE FIGURE 10-1 | A/R | |
| - 55 | | H.F. ANTENNA INSTALLATION ----SEE FIGURE 8-5 | A/R | |
| | | RADIO NOISE FILTER INSTALLATION SEE FIGURE 10-5 NOT REQUIRED WHEN INSTALLED WITH A CESSNA ADF 300 | A/R | |
| - 56 | R-12 1/2-75-RS34 | RHEOSTAT - RADIO DIAL LIGHT | 1 | |
| - 57 | S1163-2 | KNOB ASSY - RADIO RHEOSTAT | 1 | |
| - 58 | S1360-15 | CIRCUIT BREAKER | 1 | |
| - 59 | | CABLE ASSY TRANSCEIVER TO POWER SUPPLY | N/P | |
| | 17013 | CONNECTOR - TRANSCEIVER END - 20 PINS PNTR | 1 | |
| | 17005 | CONNECTOR - POWER SUPPLY END - 11 PINS-----PNTR | 1 | |
| | HIF | FUSE-HOLDER - NOT USED WHEN TRAILING ANT IS INSTALLED---- BUS | A/R | |
| | AGA-2 | FUSE - NOT USED WHEN TRAILING ANT IS INSTALLED BUS | A/R | |
| | | CABLE ASSY - TRANSCEIVER TO ANT SELECT SWITCH | N/P | |
| | RG-58A/U | COAXIAL CABLE - BULK ITEM | A/R | |
| | UG-89/U | CONNECTOR - COAXIAL - CONNECTS TO TRANSCEIVER PLUG | 1 | |
| - 60 | | CABLE ASSY - ANT SELECT SWITCH TO ANT CURRENT SENSING UNIT | N/P | |
| | RG-58A/U | COAXIAL CABLE - BULK ITEM | A/R | |
| - 61 | PL-259 | CONNECTOR - COAXIAL CONNECTS TO ANT SENSING UNIT | 1 | |
| - 62 | UG-175/U | ADAPTER - CONNECTS TO ANT SENSING UNIT | 1 | |
| | | CABLE ASSY - ANT SELECT SWITCH TO ROTARY SELECTOR CABLE | N/P | |
| | RG-58A/U | COAXIAL CABLE - BULK ITEM | A/R | |
| | UG-88C/U | PLUG - COAXIAL - CONNECTS TO ROTARY SELECTOR CABLE | 1 | |
| | | COAXIAL CABLE - ROTARY SELECTOR TO FIXED ANT SW CABLE | N/P | |
| | RG-58A/U | COAXIAL CABLE - BULK ITEM | A/R | |
| | UG-89/U | CONNECTOR - COAXIAL - CONNECTS TO FIXED ANT SW CABLE | 1 | |

CONTINUED ON NEXT PAGE

| FIGURE AND INDEX NO. | PART NUMBER | DESCRIPTION<br>1 2 3 4 5 6 7 | UNITS PER ASSY | USABLE ON CODE |
|---|---|---|---|---|
| 6-10- 63 | | CABLE ASSY - TRAIL ANT SW TO REEL ASSY ---------- | N/P | |
| - 64 | PL-112 | CONNECTOR---------- | 1 | |
| - 65 | MS3057-10B | CLAMP ---------- | 1 | |
| | | CABLE ASSY - TRANSCEIVER TO SENSING UNIT-----USED ONLY ---- WHEN TRAILING ANTENNA IS NOT INSTALLED - SEE ITEM 13 FOR LOCATION OF SENSING UNIT | N/P | |
| | RG-58A/U | COAXIAL CABLE - BULK ITEM ---------- | A/R | |
| | UG-89/U | CONNECTOR - CONNECTS TO TRANSCEIVER ---------- | 1 | |
| | PL-259 | CONNECTOR - CONNECTS TO SENSING UNIT ---------- | 1 | |
| | UG-175/U | ADAPTER - CONNECTS TO SENSING UNIT ---------- | 1 | |
| - 66 | 235-86 | CLIP JON ---------- | A/R | |

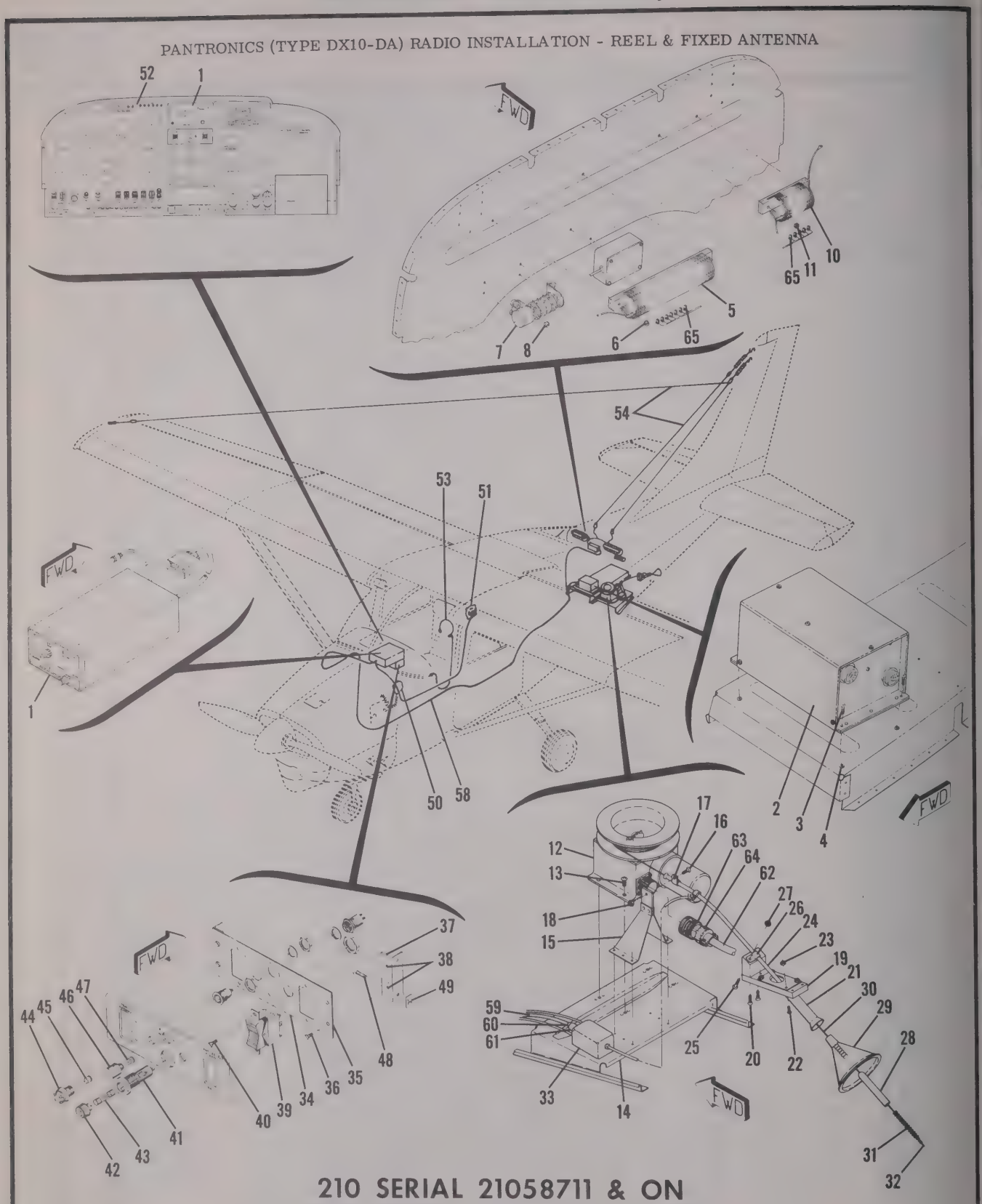


**210 SERIAL 21058711 & ON**
**T210 SERIAL T210-0001 & ON**

Figure 6-11. Pantronics (Type DX10-DA) Radio Installation - Reel & Fixed Antenna

| FIGURE AND INDEX NO. | PART NUMBER | DESCRIPTION<br>1 2 3 4 5 6 7 | UNITS PER ASSY | USABLE ON CODE |
|---|---|---|---|---|
| 6-11- | | PANTRONICS -DX10-DA- RADIO INSTALLATION - REEL AND FIXED ANTENNA 210 & T210 ONLY | N/P | |
| - 1 | 39032 | TRANSCEIVER-----PNTR | 1 | |
| | | ATTACHING PARTS | | |
| | S1022Z6-6 | SCREW | 4 | |
| | NAS446-2-3 | NUT | 4 | |
| | | ---*--- | | |
| - 2 | 39033 | REMOTE UNIT-----PNTR | 1 | |
| | | ATTACHING PARTS | | |
| - 3 | A8K75 | RIVNUT | 4 | |
| - 4 | AN515-8R8 | SCREW | 4 | |
| | | ---*--- | | |
| - 5 | 0812509-24 | LOADING COIL | 1 | |
| | | ATTACHING PARTS | | |
| | AN515-8R18 | SCREW | 2 | |
| - 6 | NAS679A08 | NUT | 2 | |
| | | ---*--- | | |
| | 30D192A6 | CAPACITOR ATTACHES TO ROTARY SELECTOR | 1 | |
| - 7 | 126103-001 | ROTARY SELECTOR LGHI | 1 | |
| | | ATTACHING PARTS | | |
| | AN515-8R10 | SCREW | 4 | |
| - 8 | NAS679A08 | NUT | 4 | |
| | | ---*--- | | |
| - 9 | 39001 | CURRENT SENSE UNIT USED ONLY WHEN FIXED ANTENNA IS INSTALLED WITHOUT THE REEL ANTENNA PNTR | 1 | |
| | | ATTACHING PARTS | | |
| | AN515-6R6 | SCREW | 2 | |
| | | ---*--- | | |
| - 10 | 0770727-1 | LOADING COIL USED ONLY WHEN FREQUENCIES OF 9 MEGACYCLES AND ABOVE ARE INSTALLED | 1 | |
| | | ATTACHING PARTS | | |
| | AN515-8R18 | SCREW | 2 | |
| - 11 | NAS679A08 | NUT | 2 | |
| | | ---*--- | | |
| | | REEL INSTALLATION - TRAILING ANTENNA | N/P | |
| - 12 | SP10010 | REEL MOTOR ASSY - STAA ALTERNATE PART NO. IS 31-420 OR 31-420A - GARW | 1 | |
| | | ATTACHING PARTS | | |
| - 13 | AN520-416R8 | SCREW | 4 | |
| | | ---*--- | | |
| - 14 | 1270435-1 | BRACKET ASSY | 1 | |
| - 15 | 0770656-2 | TUBE SUPPORT ASSY | 1 | |
| | | ATTACHING PARTS | | |
| - 16 | AN515-8R8 | SCREW | 2 | |
| - 17 | AN742D4 | CLAMP | 2 | |
| - 18 | NAS679A08 | NUT | 2 | |
| | | ---*--- | | |
| | 0770653-2 | FAIRLEAD ASSY | 1 | |
| - 19 | 0770653-7 | MOUNTING BLOCK ASSY | 1 | |
| - 20 | AN507-832R10 | SCREW | 2 | |
| - 21 | 0770041-1 | PLATE ASSY | 1 | |
| | | ATTACHING PARTS | | |
| - 22 | AN515-6R6 | SCREW | 4 | |
| - 23 | NAS679A06 | NUT | 4 | |
| | | ---*--- | | |
| - 24 | 1270439-1 | TUBE - ANT GUIDE | 1 | |
| | | ATTACHING PARTS | | |
| - 25 | AN515-8R12 | SCREW | 1 | |
| - 26 | AN742-D4 | CLAMP | 1 | |
| - 27 | NAS679A08 | NUT | 1 | |
| | | ---*--- | | |
| | 0770697-1 | DROGUE ASSY | 1 | |
| - 28 | 0770697-3 | RETAINER SPRING | 1 | |
| - 29 | 0770697-2 | DROGUE | 1 | |

CONTINUED ON NEXT PAGE

| FIGURE AND INDEX NO. | PART NUMBER | DESCRIPTION<br>1 2 3 4 5 6 7 | UNITS PER ASSY | USABLE ON CODE |
|---|---|---|---|---|
| 6-11- 30 | 0814308-2 | ANTENNA WIRE 100 FEET OF ANTENNA WIRE IS USED WITH TRANSCEIVERS HAVING FREQUENCIES ABOVE 2400 KC USE 0814308-5 ANTENNA WIRE -120 FEET- IN PLACE OF 0814308-2 WITH TRANSCEIVERS HAVING FREQUENCIE BELOW 2400 KC | A/R | |
| - 31 | 0441021 | SPRING | 1 | |
| - 32 | RA2487-2 | TERMINAL | 1 | |
| - 33 | 39001 | CURRENT SENSE UNIT REPLACES ITEM 9 WHEN TRAILING ANTENNA IS INSTALLED | 1 | |
| | | ATTACHING PARTS | | |
| | AN515-6R6 | SCREW | 2 | |
| | | ---*--- | | |
| | 1270475-230 | CONTROL PANEL & CABLE ASSY | 1 | |
| - 34 | 0770635-1 | PLATE CONTROL PANEL | 1 | |
| - 35 | 0770634-1 | PLATE MOUNTING | 1 | |
| | | ATTACHING PARTS | | |
| - 36 | AN507-632R6 | SCREW | 4 | |
| | | ---*--- | | |
| - 37 | 0770634-2 | ANGLE | 2 | |
| - 38 | NAS697A06L | NUTPLATE | 4 | |
| - 39 | S1238-2-1 | SWITCH-ANTENNA SELECT | 1 | |
| | S1238-1-1 | SWITCH - TRAIL ANTENNA | 1 | |
| | | ATTACHING PARTS | | |
| - 40 | AN507-440R6 | SCREW | 4 | |
| | NAS679A04 | NUT | 4 | |
| | | ---*--- | | |
| - 41 | S1090-18 | FUSE HOLDER ASSY | 1 | |
| - 42 | S1090-19 | CAP | 1 | |
| - 43 | S1091-2 | FUSE | 1 | |
| - 44 | VM800-4 | LIGHT ASSY MARI | 2 | |
| - 45 | NO. 300 | LAMP-----MARI | 2 | |
| - 46 | VM-911M-4A | LIGHT ASSY MARI | 1 | |
| - 47 | NO. 300 | LAMP-----MARI | 1 | |
| | | ATTACHING PARTS | | |
| - 48 | S1021Z6-8 | SCREW | 4 | |
| - 49 | NAS446-2-3 | NUT | 4 | |
| | | ---*--- | | |
| - 50 | | MICROPHONE INSTALLATION SEE FIGURE 9-4 | 1 | |
| - 51 | | SPEAKER INSTALLATION SEE FIGURE 9-3 | 1 | |
| - 52 | | TRANSMITTER SELECTOR SWITCH & AUDIO AMPLIFIER INSTL. SEE FIGURE 9-1 | A/R | |
| - 53 | | HEADSET INSTALLATION SEE FIGURE 9-5 | 1 | |
| | | RADIO COOLING INSTALLATION---- SEE FIGURE 10-1 | A/R | |
| - 54 | | H.F. ANTENNA INSTALLATION ----SEE FIGURE 8-5 | A/R | |
| | | RADIO NOISE FILTER INSTALLATION SEE FIGURE 10-5 NOT REQUIRED WHEN INSTALLED WITH A CESSNA ADF 300 | A/R | |
| - 55 | R-12 1/2-75-RS34 | RHEOSTAT - RADIO DIAL LIGHT | 1 | |
| - 56 | S1163-2 | KNOB ASSY - RADIO RHEOSTAT | 1 | |
| - 57 | S1360-15 | CIRCUIT BREAKER | 1 | |
| - 58 | | CABLE ASSY TRANSCEIVER TO POWER SUPPLY | N/P | |
| | 17013 | CONNECTOR - TRANSCEIVER END - 20 PINS PNTR | 1 | |
| | 17005 | CONNECTOR - POWER SUPPLY END - 11 PINS-----PNTR | 1 | |
| | HIF | FUSE-HOLDER - NOT USED WHEN TRAILING ANT IS INSTALLED---- BUS | A/R | |
| | AGA-2 | FUSE - NOT USED WHEN TRAILING ANT IS INSTALLED BUS | A/R | |
| | | CABLE ASSY - TRANSCEIVER TO ANT SELECT SWITCH | N/P | |
| | RG-58A/U | COAXIAL CABLE - BULK ITEM | A/R | |
| | UG-89/U | CONNECTOR - COAXIAL - CONNECTS TO TRANSCEIVER PLUG | 1 | |
| - 59 | | CABLE ASSY - ANT SELECT SWITCH TO ANT CURRENT SENSING UNIT | N/P | |
| | RG-58A/U | COAXIAL CABLE - BULK ITEM | A/R | |
| - 60 | PL-259 | CONNECTOR - COAXIAL CONNECTS TO ANT SENSING UNIT | 1 | |
| - 61 | UG-175/U | ADAPTER - CONNECTS TO ANT SENSING UNIT | 1 | |
| | | CABLE ASSY - ANT SELECT SWITCH TO ROTARY SELECTOR CABLE | N/P | |
| | RG-58A/U | COAXIAL CABLE - BULK ITEM | A/R | |
| | UG-88C/U | PLUG - COAXIAL - CONNECTS TO ROTARY SELECTOR CABLE | 1 | |
| | | COAXIAL CABLE - ROTARY SELECTOR TO FIXED ANT SW CABLE | N/P | |
| | RG-58A/U | COAXIAL CABLE - BULK ITEM | A/R | |
| | UG-89/U | CONNECTOR - COAXIAL - CONNECTS TO FIXED ANT SW CABLE | 1 | |

CONTINUED ON NEXT PAGE

| FIGURE AND INDEX NO. | PART NUMBER | DESCRIPTION<br>1 2 3 4 5 6 7 | UNITS PER ASSY | USABLE ON CODE |
|---|---|---|---|---|
| 6-11- 62 | | CABLE ASSY - TRAIL ANT SW TO REEL ASSY ---------- | N/P | |
| - 63 | PL-112 | CONNECTOR---------- | 1 | |
| - 64 | MS3057-10B | CLAMP ---------- | 1 | |
| | | CABLE ASSY - TRANSCEIVER TO SENSING UNIT-----USED ONLY ---- WHEN TRAILING ANTENNA IS NOT INSTALLED - SEE ITEM 13 FOR LOCATION OF SENSING UNIT | N/P | |
| | RG-58A/U | COAXIAL CABLE - BULK ITEM ---------- | A/R | |
| | UG-89/U | CONNECTOR - CONNECTS TO TRANSCEIVER ---------- | 1 | |
| | PL-259 | CONNECTOR - CONNECTS TO SENSING UNIT ---------- | 1 | |
| | UG-175/U | ADAPTER - CONNECTS TO SENSING UNIT ---------- | 1 | |
| - 65 | 235-86 | CLIP JON ---------- | A/R | |

PANTRONICS (TYPE DX10-DA) RADIO INSTALLATION - FIXED ANTENNA

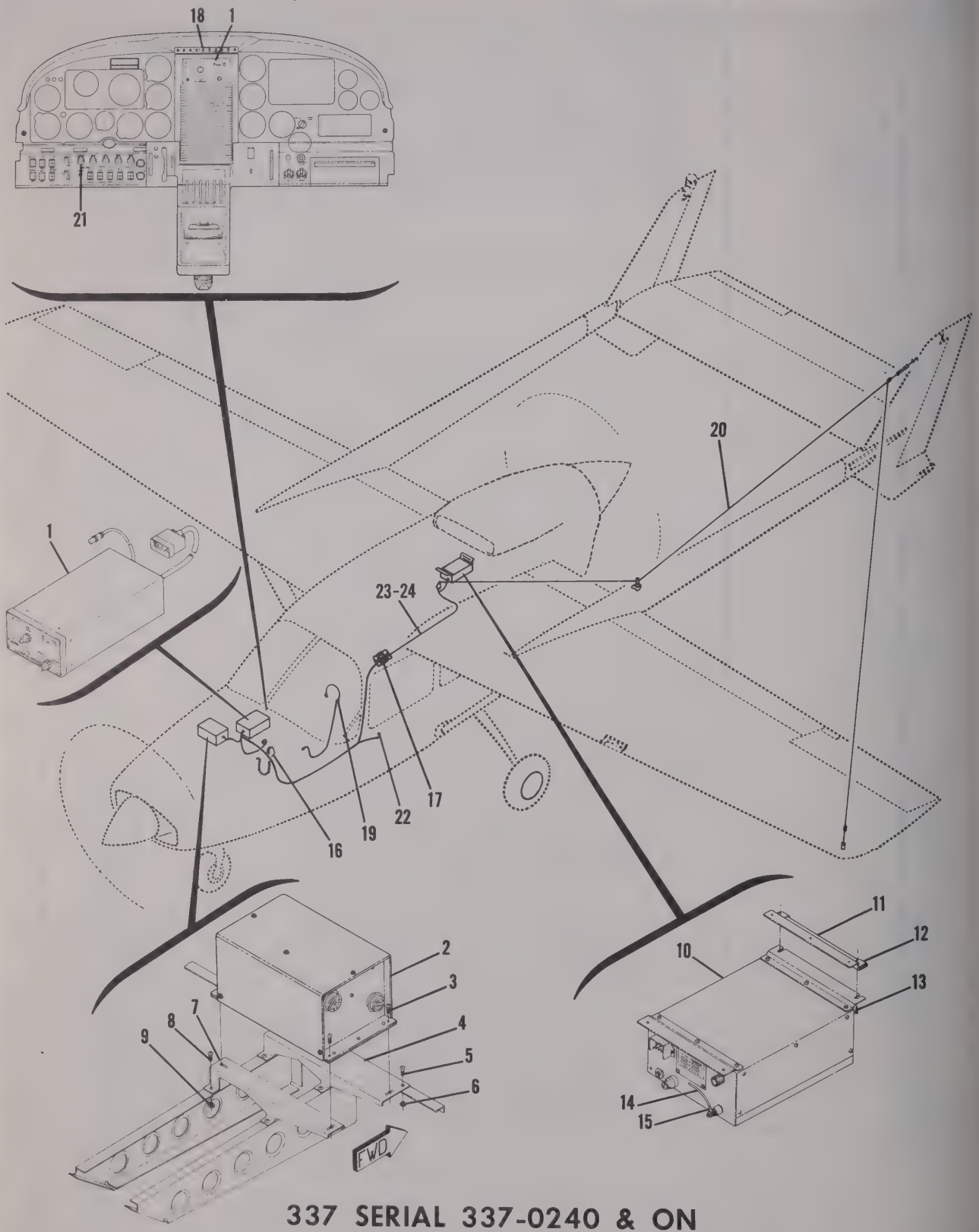


337 SERIAL 337-0240 & ON

Figure 6-12. Pantronics (Type DX10-DA) Radio Installation - Fixed Antenna

| FIGURE AND INDEX NO. | PART NUMBER | DESCRIPTION 1 2 3 4 5 6 7 | UNITS PER ASSY | USABLE ON CODE |
|---|---|---|---|---|
| 6-12- | | PANTRONICS -TYPE DX10-DA- RADIO INSTALLATION - FIXED ANTENNA INSTALLATION ONLY MODEL 337 ONLY | N/P | |
| - 1 | 39034 | TRANSCEIVER-----PNTR | 1 | |
| | | ATTACHING PARTS | | |
| | S1022Z6-8 | SCREW | 4 | |
| | NAS446-2-3 | NUT | 4 | |
| | | ---*--- | | |
| - 2 | 39035 | REMOTE UNIT-----PNTR | 1 | |
| | | ATTACHING PARTS | | |
| - 3 | AN515-8R8 | SCREW | 4 | |
| | | ---*--- | | |
| - 4 | 1513629-6 | SUPPORT ASSY | 1 | |
| | | ATTACHING PARTS | | |
| - 5 | AN515-8R8 | SCREW | 5 | |
| - 6 | NAS679A08 | NUT | 5 | |
| | | ---*--- | | |
| - 7 | 1513635-6 | SUPPORT ASSY | 1 | |
| | | ATTACHING PARTS | | |
| - 8 | AN515-8R8 | SCREW | 5 | |
| - 9 | NAS679A08 | NUT | 5 | |
| | | ---*--- | | |
| - 10 | 39031 | ANTENNA LOAD BOX | 1 | |
| | | ATTACHING PARTS | | |
| | 1512607-1 | SUPPORT ASSY | 2 | |
| - 11 | 1512607-2 | SUPPORT | 2 | |
| - 12 | NAS395-6-3 | NUT | 4 | |
| - 13 | S1021Z6-4 | SCREW | 4 | |
| | | ---*--- | | |
| - 14 | 8899 | WIRE - BULK ITEM-----BDN | A/R | |
| - 15 | S1367-2-8 | TERMINAL - ATTACHES TO 8899 WIRE ENDS | 2 | |
| - 16 | | MICROPHONE INSTALLATION SEE FIGURE 9-4 | 1 | |
| - 17 | | SPEAKER INSTALLATION SEE FIGURE 9-3 | 1 | |
| - 18 | | TRANSMITTER SELECTOR SWITCH & AUDIO AMPLIFIER INSTL. ---- SEE FIGURE 9-1 | A/R | |
| - 19 | | HEADSET INSTALLATION SEE FIGURE 9-5 | 1 | |
| | | RADIO COOLING INSTALLATION---- SEE FIGURE 10-1 | A/R | |
| - 20 | | H.F. ANTENNA INSTALLATION ----SEE FIGURE 8-5 | A/R | |
| | | RADIO NOISE FILTER INSTALLATION SEE FIGURE 10-5 ---- | A/R | |
| - 21 | | DROPPING RESISTOR - FLT INST & RADIO DIAL LT - OPT-----SEE FIGURE 10-2 | A/R | |
| - 22 | S1360-10 | CIRCUIT BREAKER | 1 | |
| - 23 | | CABLE ASSY - TRANSCEIVER TO POWER SUPPLY & ANTENNA LOAD BOX | N/P | |
| | 17013 | CONNECTOR - TRANSCEIVER END - 20 PINS PNTR | 1 | |
| | 17005 | CONNECTOR - POWER SUPPLY END & ANT LOAD BOX END - 11 PINS PNTR | 2 | |
| - 24 | | CABLE ASSY - TRANSCEIVER TO ANT LOAD BOX | N/P | |
| | RG-58A/U | COAXIAL CABLE - BULK ITEM | A/R | |
| | UG-88C/U | PLUG - RECEIVER END | 1 | |
| | UG-175/U | ADAPTER - USED WITH PL-259 PLUG - ANT LOAD BOX END ---- | 1 | |
| | PL-259 | PLUG - USED WITH UG-175/U ADAPTER - ANT LOAD BOX END ---- | 1 | |

# SECTION VII

# SUNAIR
# TRANSCEIVER

TABLE OF CONTENTS


| Figure | | Page |
|---|---|---|
| 7-1 | Sunair T-5-DA Radio Installation - Models 180 & 185 | 7-2 |
| 7-2 | Sunair T-5-DA Radio Installation - Model 182 | 7-5 |
| 7-3 | Sunair T-5-DA Radio Installation - Model 205, 206, P206 & U206 | 7-9 |
| 7-4 | Sunair T-5-DA Radio Installation - Model 210 | 7-13 |
| 7-5 | Sunair T-5-RA or T-10-R Radio Installation - Model 336 | 7-17 |
| 7-6 | Sunair T-10-R Radio Installation | 7-19 |

SUNAIR T-5-DA RADIO INSTALLATION

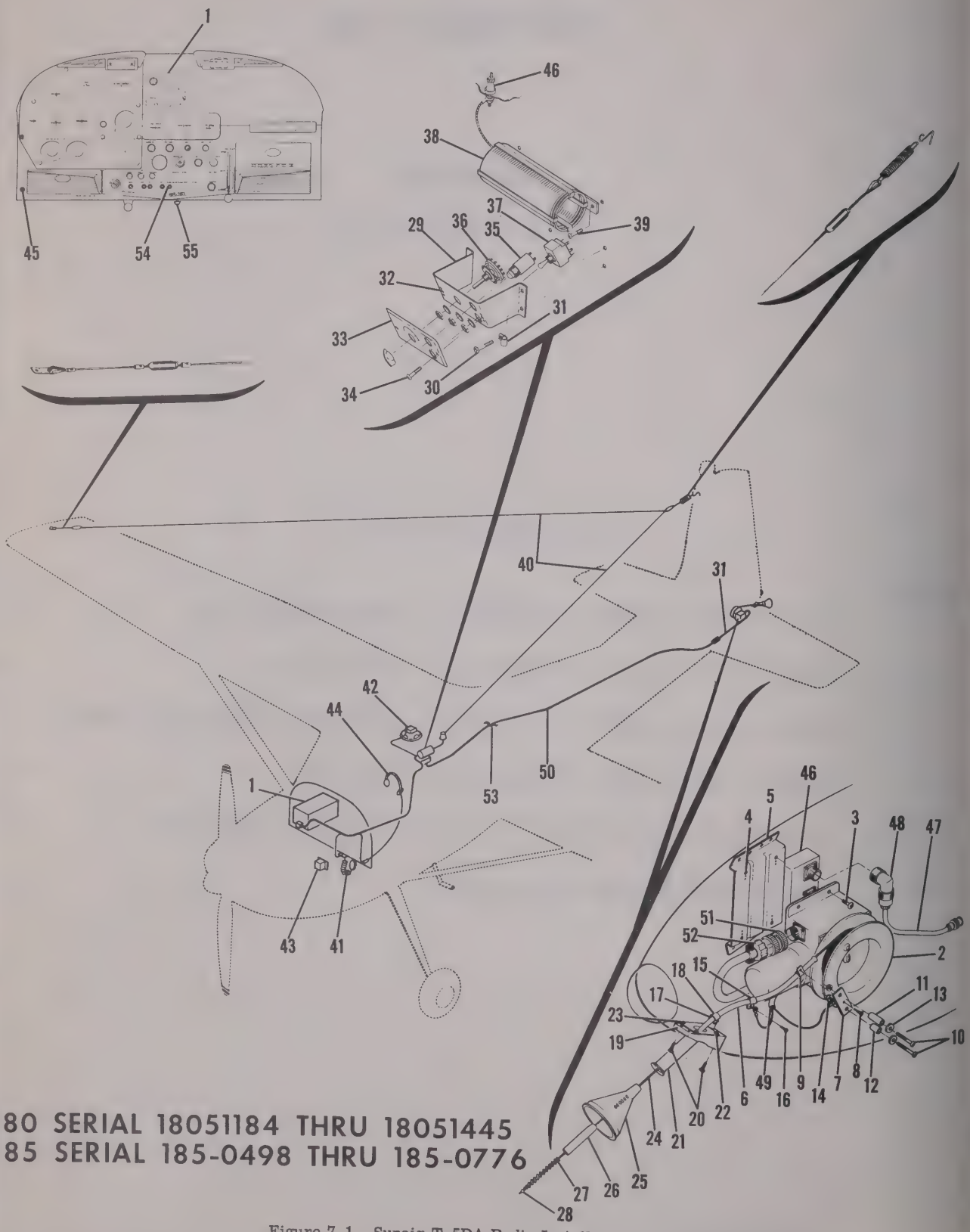


180 SERIAL 18051184 THRU 18051445
185 SERIAL 185-0498 THRU 185-0776

Figure 7-1. Sunair T-5DA Radio Installation - Models 180 & 185

| FIGURE AND INDEX NO. | PART NUMBER | DESCRIPTION 1 2 3 4 5 6 7 | UNITS PER ASSY | USABLE ON CODE |
|---|---|---|---|---|
| 7-1- | | RADIO INSTALLATION-SUNAIR T-5-DA MODELS 180 & 185 | NP | |
| - 1 | T-5-DA | * TRANSCEIVER | 1 | |
| | | ATTACHING PARTS | | |
| | S1022Z6-3 | SCREW | 4 | |
| | AN960-516 | WASHER | 8 | |
| | NAS446-2-3 | NUT | 4 | |
| | | ---*--- | | |
| | | REEL INSTALLATION-TRAILING ANTENNA | NP | |
| - 2 | 0770004-21 | REEL ASSEMBLY-TRAILING ANTENNA | 1 | |
| | | ATTACHING PARTS | | |
| - 3 | AN520-10R8 | SCREW | 4 | |
| - 4 | MS2000-1032BC | NUTPLATE | 4 | |
| | | ---*--- | | |
| - 5 | 0770004-22 | BRACKET-REEL | 1 | |
| - 6 | 0770015-7 | TUBE-ANTENNA | 1 | |
| - 7 | 0770004-24 | SUPPORT-RF INSUL | 1 | |
| - 8 | S1021Z8-3 | SCREW | 1 | |
| - 9 | A2981S-4-24A | CLAMP | 1 | |
| - 10 | AN520-10R24 | SCREW | 2 | |
| - 11 | NAS43-3-36 | SPACER | 1 | |
| - 12 | NAS43-3-22 | SPACER | 1 | |
| - 13 | S355-1 | SPACER | 2 | |
| - 14 | MS20365-1032C | NUT | 2 | |
| - 15 | A2981S-4-24A | CLAMP | 1 | |
| | | ATTACHING PARTS | | |
| - 16 | S1021Z8-8 | SCREW | 1 | |
| | | ---*--- | | |
| - 17 | 0770015-9 | SUPPORT-ANTENNA GUIDE | 1 | |
| | | ATTACHING PARTS | | |
| | S1021Z8-6 | SCREW | 1 | |
| - 18 | A2981S-4-24A | CLAMP | 1 | |
| | | ---*--- | | |
| - 19 | 0770044-1 | BLOCK | 1 | |
| | | ATTACHING PARTS | | |
| - 20 | S1021Z8-8 | SCREW | 2 | |
| | | ---*--- | | |
| - 21 | 0770041-1 | PLATE ASSY | 1 | |
| | | ATTACHING PARTS | | |
| - 22 | AN515-6R18 | SCREW | 2 | |
| - 23 | AN515-6R8 | SCREW | 2 | |
| | MS20365-632C | NUT | 4 | |
| | | ---*--- | | |
| - 24 | 0814308-2 | WIRE TRAILING ANTENNA 100 FT LONG ABOVE 2400 KC | 1 | |
| | 0814308-5 | WIRE TRAILING ANTENNA 120 FT LONG BELOW 2400 KC | 1 | |
| - 25 | 0770043-1 | DROGUE ASSY-TRAILING ANTENNA THRU 1963 | 1 | |
| | 0770697-1 | DROGUE ASSY-TRAILING ANTENNA 1964 AND ON | 1 | |
| | 0770043-2 | DROGUE THRU 1963 | 1 | |
| | 0770697-2 | DROGUE 1964 AND ON | 1 | |
| - 26 | 0770043-3 | RETAINER SPRING THRU 1963 | 1 | |
| | 0770697-3 | RETAINER SPRING 1964 AND ON | 1 | |
| - 27 | 0441021 | SPRING | 1 | |
| - 28 | PA2487-2 | TERMINAL | 1 | |
| - 29 | 0770004-28 | BRACKET-TRAILING ANTENNA SWITCH | 1 | |
| | | ATTACHING PARTS | | |
| - 30 | AN515-8R22 | SCREW | 4 | |
| | NAS43-3-52 | SPACER | 4 | |
| | MS20365-832C | NUT | 4 | |
| | | ---*--- | | |
| - 31 | AN742D4 | CLAMP | 2 | |
| - 32 | MK1000-832 | NUTPLATE | 2 | |
| - 33 | 0770004-25 | COVER-TRAILING ANTENNA SWITCH | 1 | |
| | | ATTACHING PARTS | | |
| - 34 | AN515-8R8 | SCREW | 2 | |
| | | ---*--- | | |
| - 35 | 0770004-29 | LIGHT-INDICATOR | 1 | |
| - 36 | 0770004-30 | SWITCH ASSY-TRAILING ANTENNA | 1 | |
| - 37 | AN3027-7 | SWITCH | 1 | |

CONTINUED ON NEXT PAGE

| FIGURE AND INDEX NO. | PART NUMBER | DESCRIPTION<br>1 2 3 4 5 6 7 | UNITS PER ASSY | USABLE ON CODE |
|---|---|---|---|---|
| 7-1- 38 | 0812509-21 | COIL ASSY | 1 | |
| | | ATTACHING PARTS | | |
| - 39 | S1021Z8-8 | SCREW | 2 | |
| | NAS446-4-3 | NUT | 2 | |
| | | ---*--- | | |
| - 40 | | MF & HF FIXED WIRE ANTENNA INSTALLATION SEE FIGURE 8-5 | 1 | |
| - 41 | | MICROPHONE INSTALLATION SEE FIGURE 9-4 | 1 | |
| - 42 | | SPEAKER INSTALLATION SEE FIGURE 9-3 | 1 | |
| - 43 | | RADIO NOISE FILTER INSTALLATION SEE FIGURE 10-5 | AR | |
| | | RADIO COOLING SEE FIGURE 10-1 | 1 | |
| - 44 | 0770039-1 | HEADSET ASSY | 1 | |
| - 45 | S1103-1 | PHONE JACK | 1 | |
| - 46 | 0812800-56 | INVERTER-RF | 1 | |
| | | ATTACHING PARTS | | |
| | AN515-8R8 | SCREW | 2 | |
| | S355 | SPACER | 2 | |
| | | ---*--- | | |
| - 47 | | CABLE ASSY-RF RECTIFIER TO ANT LOADING SW CABLE | NP | |
| | RG-58A/U | COAXIAL CABLE-BULK ITEM | AR | |
| | UG-88C/U | * PLUG-COAXIAL | 1 | |
| | PL-259 | * PLUG-COAXIAL | 1 | |
| | UG-175/U | * ADAPTER-COAX | 2 | |
| - 48 | M359 | RIGHT ANGLE ADAPTER-COAXIAL | 2 | |
| - 49 | | CABLE ASSY-RF RECTIFIER TO REEL ANTENNA | NP | |
| | RG-58A/U | COAXIAL CABLE-BULK ITEM | AR | |
| | PL-259 | * PLUG-COAXIAL | 1 | |
| | UG-175/U | * ADAPTER-COAX | 1 | |
| | AMP-31888 | TERMIANL | 1 | |
| - 50 | 0770033-11 | CABLE ASSY-ANT LOADING SW TO RF RECTIFIER CABLE | NP | |
| | RG-58A/U | COAXIAL CABLE-BULK ITEM | AR | |
| | UG-291/U | JACK-COAXIAL | 1 | |
| | AMP-31902 | TERMINAL | 1 | |
| | | CABLE ASSY-ANT REEL SW TO REEL ANT MOTOR SW CABLE | NP | |
| | MS3100A-20-15S | * RECEPTACLE | 1 | |
| | | CABLE ASSY-ANT REEL MOTOR TO ANT REEL SW CABLE | NP | |
| | MS3106A-20-15P | * PLUG | 1 | |
| | MS3057-12B | * ADAPTER | 1 | |
| - 51 | PL-112 | PLUG | 1 | |
| - 52 | MS3057-10 | CLAMP | 1 | |
| - 53 | 1270015-1 | STRAP ASSY-WIRING | 1 | |
| | | ATTACHING PARTS | | |
| | S1021Z8-8 | SCREW | 1 | |
| | NAS446-4-3 | NUT | 1 | |
| | | ---*--- | | |
| - 54 | PSM-15N | CIRCUIT BREAKER THRU 1963 ONLY | 1 | |
| | S1360-15 | CIRCUIT BREAKER 1964 AND ON | 1 | |
| - 55 | 0413126-4 | RHEOSTAT ASSY | 1 | |
| | | TRANSMITTER SELECTOR SWITCH SEE FIGURE 9-1 | AR | |

* ITEMS MARKED WITH ASTERISK SUPPLIED WHEN COMPLETE RADIO IS PURCHASED.

SUNAIR T-5-DA RADIO INSTALLATION

## 182 SERIAL 18254347 THRU 18255844

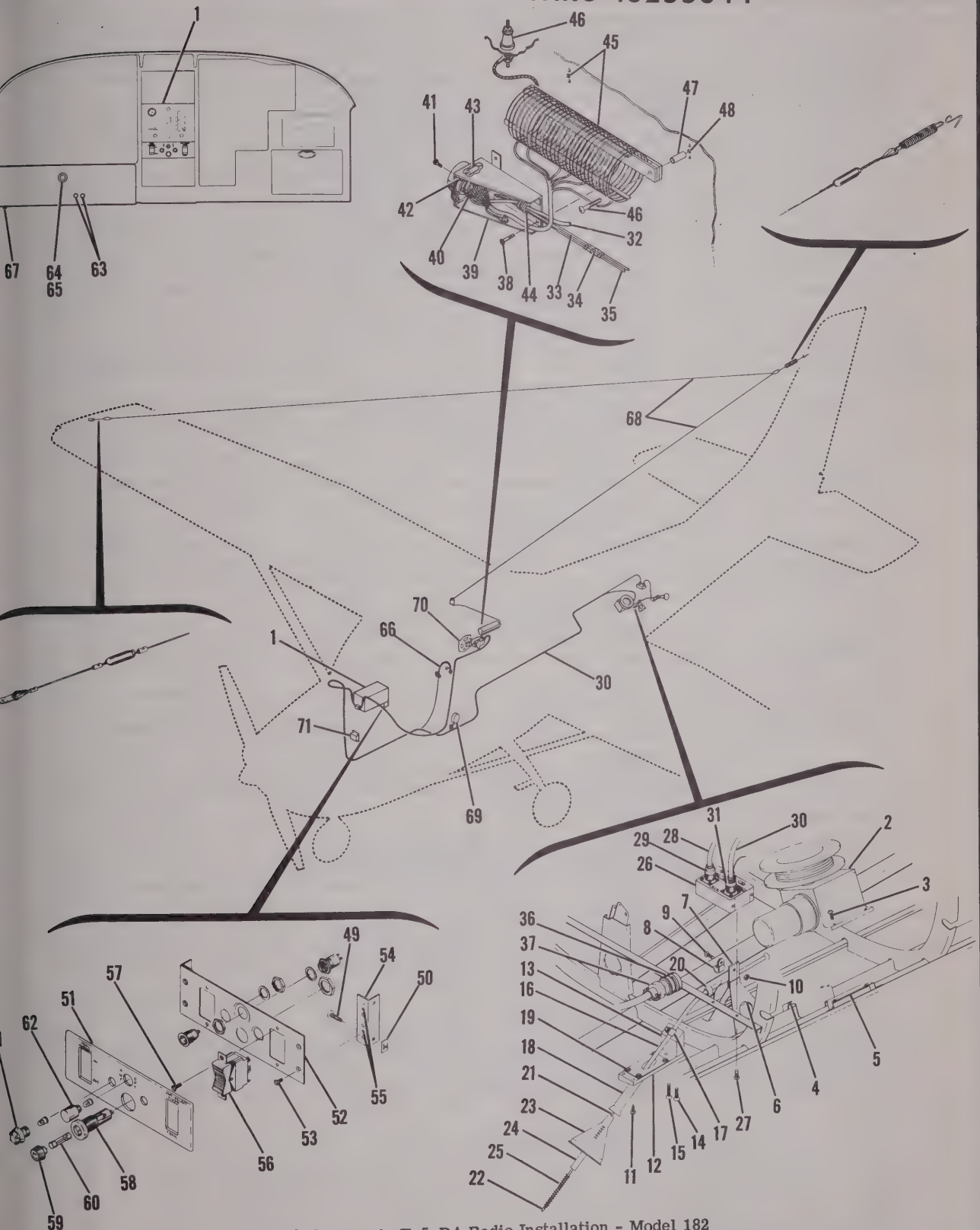


Figure 7-2. Sunair T-5-DA Radio Installation - Model 182

| FIGURE AND INDEX NO. | PART NUMBER | DESCRIPTION<br>1 2 3 4 5 6 7 | UNITS PER ASSY | USAB ON COD |
|---|---|---|---|---|
| 7-2- | | RADIO INSTALLATION-SUNAIR T-5-DA MODEL 182 ONLY | NP | |
| - 1 | T-5-DA | * TRANSCEIVER | 1 | |
| | | ATTACHING PARTS | | |
| | S1022Z6-8 | SCREW | 4 | |
| | AN960-516 | WASHER | 8 | |
| | NAS446-2-3 | NUT | 4 | |
| | | ---*--- | | |
| | | REEL INSTALLATION-TRAILING ANTENNA | NP | |
| - 2 | 0770004-21 | REEL ASSY-TRAILING ANTENNA | 1 | |
| | | ATTACHING PARTS | | |
| - 3 | AN4-4A | BOLT | 4 | |
| | | ---*--- | | |
| - 4 | 0770639-1 | BRACKET ASSEMBLY-INBOARD | 1 | |
| - 5 | 0770639-2 | BRACKET ASSEMBLY-OUTBOARD | 1 | |
| | NAS697A4 | NUTPLATE | 2 | |
| - 6 | 0770656-2 | TUBE SUPPORT ASSY | 1 | |
| - 7 | 0770656-5 | PLATE INSULATOR | 1 | |
| | 0770653-1 | FAIRLEAD ASSY-REEL TUBE | 1 | |
| | | ATTACHING PARTS | | |
| - 8 | AN742D4 | CLAMP | 1 | |
| - 9 | AN515-8R8 | SCREW | 1 | |
| - 10 | MS20365-832C | NUT | 1 | |
| - 11 | S1021Z8-8 | SCREW | 3 | |
| | | ---*--- | | |
| | 0770653-6 | MOUNTING BLOCK ASSY | 1 | |
| - 12 | 0770653-3 | MOUNTING BLOCK | 1 | |
| - 13 | 0770653-5 | SUPPORT-ANTENNA GUIDE | 1 | |
| | | ATTACHING PARTS | | |
| - 14 | AN507-832R8 | SCREW | 1 | |
| - 15 | AN507-832R10 | SCREW | 1 | |
| | | ---*--- | | |
| - 16 | 0770654-1 | TUBE-ANTENNA GUIDE | 1 | |
| | | ATTACHING PARTS | | |
| - 17 | AN742D4 | CLAMP | 1 | |
| | AN515-8R12 | SCREW | 1 | |
| | MS20365-832C | NUT | 1 | |
| | | ---*--- | | |
| - 18 | 0770041-1 | PLATE ASSY-REEL ANTENNA | 1 | |
| | | ATTACHING PARTS | | |
| - 19 | AN515-6R6 | SCREW | 4 | |
| | MS20365-632C | NUT | 4 | |
| | | ---*--- | | |
| - 20 | AN472D4 | CLAMP | 1 | |
| | | ATTACHING PARTS | | |
| | AN515-8R6 | SCREW | 1 | |
| | MS20364-832C | NUT | 1 | |
| | | ---*--- | | |
| - 21 | 0814308-2 | WIRE-TRAILING ANTENNA-----100 FT LONG ABOVE 2400 KC | 1 | |
| | 0814308-5 | WIRE-TRAILING ANTENNA-----120 FT LONG BELOW 2400 KC | 1 | |
| | | ATTACHING PARTS | | |
| - 22 | RA2487-2 | TERMINAL | 1 | |
| | | ---*--- | | |
| | 0770043-1 | DROGUE ASSY-TRAILING ANTENNA THRU 1963 | 1 | |
| | 0770697-1 | DROGUE ASSY-TRAILING ANTENNA 1964 AND ON | 1 | |
| - 23 | 0770043-2 | DROGUE THRU 1963 | 1 | |
| | 0770697-2 | DROGUE 1964 AND ON | 1 | |
| - 24 | 0770043-3 | RETAINER SPRING THRU 1963 | 1 | |
| | 0770697-3 | RETAINER SPRING 1964 AND ON | 1 | |
| - 25 | 0441021 | SPRING | 1 | |
| - 26 | 0812800-56 | INVERTER-RF | 1 | |
| | | ATTACHING PARTS | | |
| - 27 | AN515-6R8 | SCREW | 2 | |
| | | ---*--- | | |
| | | CABLE ASSY-INVERTER TO TRAIL ANTENNA | NP | |
| - 28 | RG-58A/U | CABLE-COAXIAL BULK ITEM 17 INCHES LONG | AR | |
| - 29 | PL-259 | PLUG INVERTER END | 1 | |
| | UG-175/U | * ADAPTER-COAX | 1 | |
| | AMP-31888 | TERMINAL TRAIL ANT END | 1 | |

CONTINUED ON NEXT PAGE

| FIGURE AND INDEX NO. | PART NUMBER | DESCRIPTION 1 2 3 4 5 6 7 | UNITS PER ASSY | USABLE ON CODE |
|---|---|---|---|---|
| 7-2- | | CABLE ASSY-INVERTER TO ANT SEL SW | NP | |
| - 30 | RG-58A/U | CABLE-COAXIAL BULK ITEM 24 INCHES | AR | |
| - 31 | PL-259 | * PLUG INVERTER END | 1 | |
| | UG-175/U | * ADAPTER-COAX | | |
| | AMP-31882 | TERMINAL ANT SEL SW END | 1 | |
| | | CABLE ASSY-REAR COIL TAP SELECTOR TO CONTROL PANEL CABLE | NP | |
| - 32 | RG-58A/U | CABLE-COAXIAL BULK ITEM 71 INCHES | AR | |
| | UG-89/U | * JACK-COAXIAL CONNECTS TO ANT SEL SW CABLE | 1 | |
| | S1367-1-6 | TERMINAL COIL END | 1 | |
| | | CABLE ASSY-ANT SEL SW TO LEDEX MOTOR CABLE | NP | |
| | RG-58A/U | CABLE-COAXIAL BULK ITEM 24 INCHES | AR | |
| | UG-88C/U | * PLUG-COAXIAL | 1 | |
| | | CABLE ASSY-ANT SEL SW TO TRANSCEIVER CABLE | NP | |
| | RG-58A/U | CABLE-COAXIAL BULK ITEM 18 INCHES | AR | |
| | UG-88C/U | * PLUG-COAXIAL | 1 | |
| | UG-89/U | * JACK-COAXIAL | 1 | |
| - 33 | | CABLE ASSY-LEDEX TO DUST COVER CABLE | NP | |
| | 26-4200-16S | * CONNECTOR | 1 | |
| - 34 | S1370-0 | SPLICE | 6 | |
| - 35 | | CABLE ASSY-DUST COVER TO LEDEX MOTOR CABLE | NP | |
| | | CABLE ASSY-ANT REEL MOTOR TO OUT & IN SW ON CONTROL PANEL | NP | |
| - 36 | PL-112 | PLUG | 1 | |
| - 37 | MS3057-10B | CLAMP | 1 | |
| | | COIL INSTALLATION-LOADING | NP | |
| | 0770627-1 | LEDEX MOTOR ASSY | 1 | |
| | | ATTACHING PARTS | | |
| - 38 | AN515-8R8 | SCREW | 4 | |
| | MS20365-832C | NUT | 4 | |
| | | ---*--- | | |
| - 39 | 0770628-1 | BRACKET ASSY-MOTOR MOUNTING | 1 | |
| - 40 | A-46213-001 | MOTOR LEDEX | 1 | |
| | | ATTACHING PARTS | | |
| - 41 | AN515-6R6 | SCREW | 5 | |
| - 42 | MS20365-632C | NUT | 5 | |
| | | ---*--- | | |
| - 43 | 30D192A1 | CAPACITOR | 1 | |
| - 44 | NAS435D6 | CLAMP | 1 | |
| | | ATTACHING PARTS | | |
| | S1022Z8-8 | SCREW | 1 | |
| | | ---*--- | | |
| - 45 | 0812509-24 | COIL ASSY-LOADING | 1 | |
| | | ATTACHING PARTS | | |
| - 46 | AN515-8R18 | SCREW | 2 | |
| - 47 | NAS43-3-12 | SPACER | 2 | |
| - 48 | NAS680A08 | NUTPLATE | 2 | |
| | | ---*--- | | |
| | 0770630-1 | CONTROL PANEL ASSY-REEL ANT | 1 | |
| | | ATTACHING PARTS | | |
| - 49 | S1021Z6-8 | SCREW | 4 | |
| - 50 | NAS446-2-3 | NUT | 4 | |
| | | ---*--- | | |
| - 51 | 0770635-1 | PLATE-CONTROL PANEL | 1 | |
| - 52 | 0770634-1 | PLATE-MOUNTING | 1 | |
| | | ATTACHING PARTS | | |
| - 53 | AN507-632R6 | SCREW | 4 | |
| | | ---*--- | | |
| - 54 | 0770634-2 | ANGLE ASSY | 2 | |
| - 55 | NAS697A06L | NUTPLATE | 2 | |
| - 56 | S1238-2-1 | SWITCH-ANTENNA SELECT | 1 | |
| | S1238-1-1 | SWITCH-TRAIL ANT | 1 | |
| | | ATTACHING PARTS | | |
| - 57 | AN507-440R6 | SCREW | 2 | |
| | MS20365-440C | NUT | 2 | |
| | | ---*--- | | |
| - 58 | S1090-2 | FUSE HOLDER ASSY | 1 | |

CONTINUED ON NEXT PAGE

| FIGURE AND INDEX NO. | PART NUMBER | DESCRIPTION 1 2 3 4 5 6 7 | UNITS PER ASSY | USABLE ON CODE |
|---|---|---|---|---|
| 7-2- 59 | S1090-11 | CAP-5A | 1 | |
| - 60 | S1091-5 | FUSE-5A | 1 | |
| - 61 | VM-800-2 | LIGHT ASSY | 2 | |
| - 62 | VM-911M-8P5 | LIGHT ASSY | 1 | |
| - 63 | S1232-15 | CIRCUIT BREAKER THRU 1963 ONLY | 2 | |
| | S1360-15 | CIRCUIT BREAKER 1964 AND ON | 1 | |
| - 64 | R-12 1/2-75-RS34 | RHEOSTAT | 1 | |
| - 65 | S1163-2 | KNOB-RHEOSTAT | 1 | |
| - 66 | 0770039-1 | HEADSET | 1 | |
| - 67 | S1103-1 | PHONE JACK | 1 | |
| - 68 | | MF & HF FIXED WIRE ANTENNA INSTALLATION SEE FIGURE 8-5 | 1 | |
| - 69 | | MICROPHONE INSTALLATION SEE FIGURE 9-4 | 1 | |
| - 70 | | SPEAKER INSTALLATION SEE FIGURE 9-3 | 1 | |
| - 71 | | RADIO NOISE FILTER INSTALLATION SEE FIGURE 10-5 | AR | |
| | | RADIO COOLING SEE FIGURE 10-1 | 1 | |

* ITEMS MARKED WITH ASTERISK SUPPLIED WHEN COMPLETE RADIO IS PURCHASED.

SUNAIR T-5-DA RADIO INSTALLATION

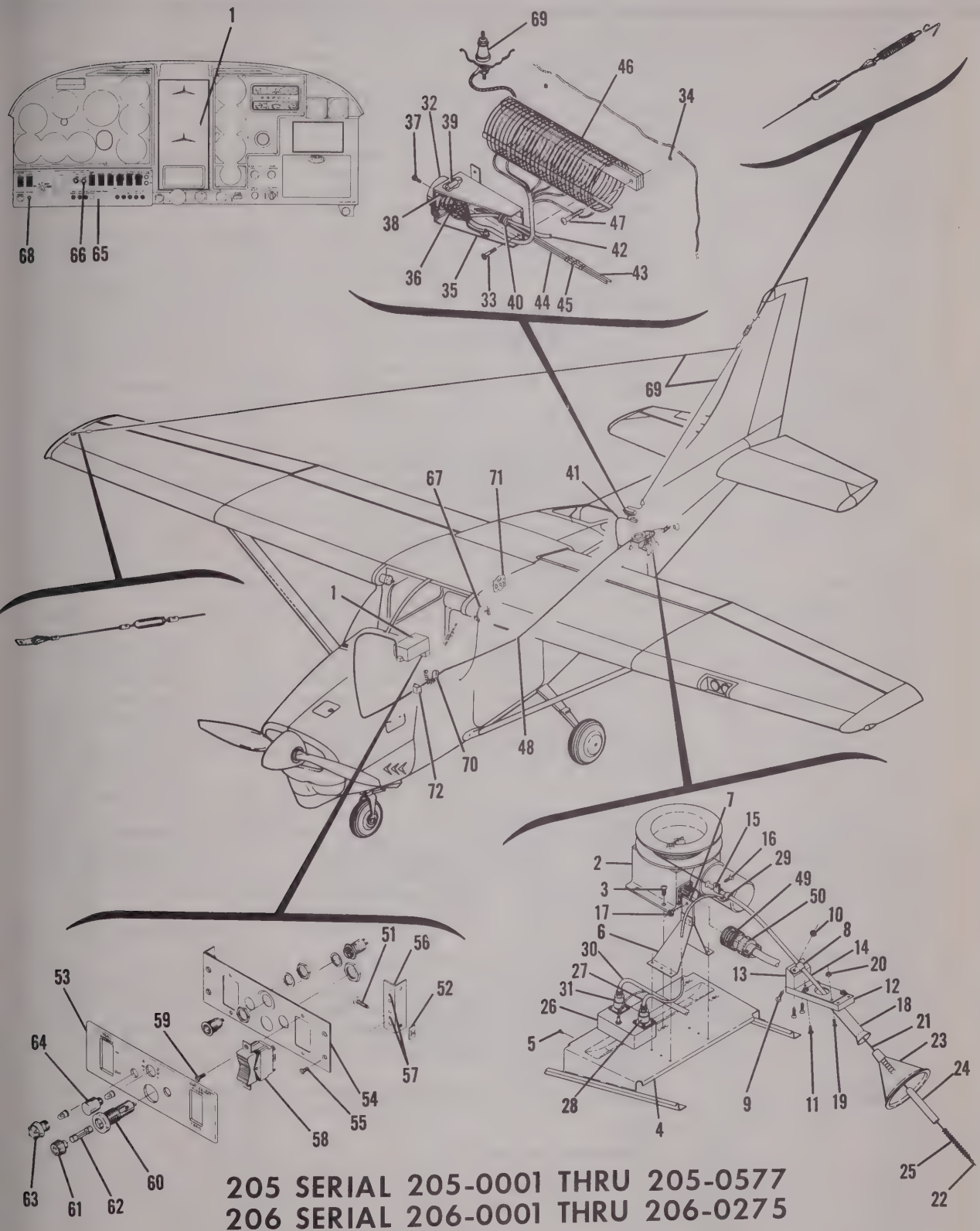


**205 SERIAL 205-0001 THRU 205-0577**
**206 SERIAL 206-0001 THRU 206-0275**

Figure 7-3. Sunair T-5-DA Radio Installation - Model 205

| FIGURE AND INDEX NO. | PART NUMBER | | DESCRIPTION<br>1 2 3 4 5 6 7 | UNITS PER ASSY | USABLE ON CODE |
|---|---|---|---|---|---|
| 7-3- | | | RADIO INSTALLATION-SUNAIR T-5-DA MODELS 205, 206, P206 & U206 | N/P | |
| - 1 | T-5-DA | | * TRANSCEIVER | 1 | |
| | | | * RECEPTACLE 16 PIN | 1 | |
| | | | ATTACHING PARTS | | |
| | S1022Z6-8 | | SCREW | 4 | |
| | AN960-516 | | WASHER | 4 | |
| | NAS446-2-3 | | NUT | 4 | |
| | | | ---*--- | | |
| | | | REEL INSTALLATION-TRAILING ANTENNA | N/P | |
| - 2 | SP-10010 | | * REEL ASSEMBLY-TRAILING ANTENNA | 1 | |
| | | | ATTACHING PARTS | | |
| - 3 | AN520-416R8 | | SCREW | 4 | |
| | | | ---*--- | | |
| - 4 | 1270635-1 | | SUPPORT ASSY | 1 | |
| | | | ATTACHING PARTS | | |
| - 5 | AN515-8R6 | | SCREW | 4 | |
| | | | ---*--- | | |
| - 6 | 1270440-1 | | TUBE SUPPORT ASSY | 1 | |
| - 7 | 1270440-2 | | PLATE-INSULATOR | 1 | |
| | 0770653-2 | | FAIRLEAD ASSY-REEL TUBE | 1 | |
| | | | ATTACHING PARTS | | |
| - 8 | AN742D4 | | CLAMP | 1 | |
| - 9 | AN515-8R8 | | SCREW | 1 | |
| - 10 | MS20365-832C | | NUT | 1 | |
| - 11 | S1021Z8-8 | | SCREW | 3 | |
| | | | ---*--- | | |
| | 0770653-7 | | MOUNTING BLOCK ASSEMBLY | 1 | |
| - 12 | 0770653-4 | | MOUNTING BLOCK | 1 | |
| - 13 | 0770653-5 | | SUPPORT-ANTENNA GUIDE | 1 | |
| | | | ATTACHING PARTS | | |
| | AN507-832R10 | | SCREW | 2 | |
| | | | ---*--- | | |
| - 14 | 1270439-1 | | TUBE-ANTENNA GUIDE | 1 | |
| | | | ATTACHING PARTS | | |
| - 15 | AN742D4 | | CLAMP | 1 | |
| - 16 | AN515-8R12 | | SCREW | 1 | |
| - 17 | MS20365-832C | | NUT | 1 | |
| | | | ---*--- | | |
| - 18 | 0770041-1 | | PLATE ASSEMBLY-REEL ANTENNA | 1 | |
| | | | ATTACHING PARTS | | |
| - 19 | AN515-6R6 | | SCREW | 4 | |
| - 20 | MS20365-632C | | NUT | 4 | |
| | | | ---*--- | | |
| - 21 | 0814308-2 | | WIRE-TRAILING ANTENNA 100 FT. LONG ABOVE 2400KC | 1 | |
| | 0814308-5 | * | WIRE-TRAILING ANTENNA 120 FT. LONG BELOW 2400KC | 1 | |
| | | | ATTACHING PARTS | | |
| - 22 | RA2487-2 | | TERMINAL | 1 | |
| | | | ---*--- | | |
| | 0770043-1 | | DROGUE ASSY-TRAILING ANTENNA THRU 1963 | 1 | |
| | 0770697-1 | | DROGUE ASSY-TRAILING ANTENNA 1964 AND ON | 1 | |
| - 23 | 0770043-2 | | DROGUE THRU 1963 | 1 | |
| | 0770697-2 | | DROGUE 1964 AND ON | 1 | |
| - 24 | 0770043-3 | | RETAINER SPRING THRU 1963 | 1 | |
| | 0770697-3 | | RETAINER SPRING 1964 AND ON | 1 | |
| - 25 | 0441021 | | SPRING | 1 | |
| - 26 | 0812800-56 | | INVERTER-RF | 1 | |
| | | | ATTACHING PARTS | | |
| | AN515-8R6 | | SCREW | 2 | |
| | | | ---*--- | | |
| | | | CABLE ASSY-INVERTOR TO TRAIL ANTENNA | N/P | |
| - 27 | RG-58A/U | | CABLE-COAXIAL BULK ITEM 17 INCH LONG | A/R | |
| - 28 | PL-259 | | * PLUG INVERTER END | 1 | |
| | UG-175/U | | * ADAPTER-COAX | 1 | |
| | AMP-31888 | | TERMINAL TRAIL ANT END | 1 | |
| | | | ATTACHING PARTS | | |
| | AN515-8R6 | | SCREW | 1 | |
| - 29 | AN742D4 | | CLAMP | 1 | |

CONTINUED ON NEXT PAGE

| FIGURE AND INDEX NO. | PART NUMBER | DESCRIPTION 1 2 3 4 5 6 7 | UNITS PER ASSY | USABLE ON CODE |
|---|---|---|---|---|
| 7-3- | MS20364-832C | NUT | 1 | |
| | | ---*--- | | |
| | | CABLE ASSY-INVERTER TO ANT SEL SW | N/P | |
| - 30 | RG-58A/U | * CABLE-COAXIAL BULK ITEM | A/R | |
| | S1367-1-6 | TERMINAL ANT SEL SW END | 1 | |
| - 31 | PL-259 | * PLUG INVERTER END | 1 | |
| | UG-175/U | * ADAPTER-COAX | 1 | |
| | | COIL INSTALLATION-LOADING | N/P | |
| - 32 | 0770627-2 | LEDEX MOTOR ASSEMBLY | 1 | |
| | | ATTACHING PARTS | | |
| - 33 | AN515-8R6 | SCREW | 4 | |
| - 34 | MS20365-832C | NUT | 4 | |
| | | ---*--- | | |
| - 35 | 0770628-1 | BRACKET ASSEMBLY-MOTOR MOUNTING | 1 | |
| - 36 | A-46213-001 | MOTOR-LEDEX | 1 | |
| | | ATTACHING PARTS | | |
| - 37 | AN515-6R6 | SCREW | 5 | |
| - 38 | MS20365-632C | NUT | 5 | |
| | | ---*--- | | |
| - 39 | 30D192A1 | CAPACITOR | 1 | |
| - 40 | NAS435D6 | CLAMP | 1 | |
| | | ATTACHING PARTS | | |
| | S1022Z8-8 | SCREW | 1 | |
| | | ---*--- | | |
| - 41 | | CABLE ASSY-REAR COIL TAP SELECTOR TO CONTROL PANEL CABLE | N/P | |
| - 42 | RG-58A/U | CABLE-COAXIAL BULK ITEM | A/R | |
| | UG-89/U | JACK-COAXIAL CONNECTS TO ANT SEL SW CABLE | 1 | |
| | S1367-1-6 | TERMINAL COIL END | 1 | |
| - 43 | | CABLE ASSY-DUSTCOVER TO LEDEX MOTOR CABLE | N/P | |
| - 44 | | CABLE ASSY-LEDEX MOTOR TO DUST COVER CABLE | N/P | |
| - 45 | S1370-1 | DISCONNECT | 6 | |
| - 46 | 0812509-24 | COIL ASSEMBLY-LOADING | 1 | |
| | | ATTACHING PARTS | | |
| - 47 | S1021Z6-8 | SCREW | 2 | |
| | MS20364-832C | NUT | 2 | |
| | | ---*--- | | |
| - 48 | | CABLE ASSY-ANT REEL MOTOR TO OUT & IN SW ON CONTROL PANEL | N/P | |
| - 49 | PL-112 | PLUG | 1 | |
| - 50 | MS3057-10B | CLAMP | 1 | |
| | 0770630-2 | CONTROL PANEL ASSY-REEL ANT | 1 | |
| | | ATTACHING PARTS | | |
| - 51 | S1021Z6-8 | SCREW | 4 | |
| - 52 | NAS446-2-3 | NUT | 4 | |
| | | ---*--- | | |
| - 53 | 0770635-1 | PLATE-CONTROL PANEL | 1 | |
| - 54 | 0770634-1 | PLATE-MOUNTING | 1 | |
| | | ATTACHING PARTS | | |
| - 55 | AN507-632R6 | SCREW | 4 | |
| | | ---*--- | | |
| - 56 | 0770634-2 | ANGLE ASSY | 1 | |
| - 57 | NAS697A06L | NUTPLATE | 2 | |
| - 58 | S1238-2-1 | SWITCH-ANTENNA SELECT | 1 | |
| | S1238-1-1 | SWITCH-TRAIL ANTENNA | 1 | |
| | | ATTACHING PARTS | | |
| - 59 | AN507-440R6 | SCREW | 4 | |
| | MS20365-440C | NUT | 4 | |
| | | ---*--- | | |
| | | CABLE ASSY-ANT SEL SW TO LEDEX MOTOR CABLE | N/P | |
| | RG-58A/U | CABLE-COAXIAL BULK ITEM 24 INCH LONG | A/R | |
| | UG-88C/U | * PLUG-COAXIAL | 1 | |
| | | CABLE ASSY-ANT SEL SW TO TRANSCEIVER CABLE | N/P | |
| | RG-58A/U | CABLE-COAXIAL BULK ITEM 18 INCH LONG | A/R | |
| | UG-89/U | * JACK-COAXIAL | 1 | |

CONTINUED ON NEXT PAGE

| FIGURE AND INDEX NO. | PART NUMBER | DESCRIPTION<br>1 2 3 4 5 6 7 | UNITS PER ASSY | USABL. ON CODE |
|---|---|---|---|---|
| 7-3- 60 | S1090-2 | FUSE HOLDER ASSEMBLY | 1 | |
| - 61 | S1090-11 | CAP-5A | 1 | |
| - 62 | S1091-5 | FUSE-5A | 1 | |
| - 63 | VM-800-2 | LIGHT ASSEMBLY | 2 | |
| - 64 | VM-911M-4A | LIGHT ASSEMBLY | 1 | |
| | UG-88C/U | * PLUG-ATTACHES TO RF CABLE ON TUNER AND MATES WITH UG-89/U CONNECTOR ON ANT SEL SW CABLE | 1 | |
| - 65 | S1232-15 | CIRCUIT BREAKER THRU 1963 ONLY | 2 | |
| | S1360-15 | CIRCUIT BREAKER 1964 AND ON | 1 | |
| - 66 | R-12 1/2-75-RS34 | RHEOSTAT OM | 1 | |
| | S1163-2 | KNOB | 1 | |
| - 67 | 0770039-1 | HEADSET | 1 | |
| - 68 | S1103-1 | PHONE JACK | 1 | |
| - 69 | | MF & HF COMM ANTENNA INSTALLATION SEE FIGURE 8-5 | 1 | |
| - 70 | | MICROPHONE INSTALLATION SEE FIGURE 9-4 | 1 | |
| - 71 | | SPEAKER INSTALLATION SEE FIGURE 9-3 | 1 | |
| - 72 | | RADIO NOISE FILTER INSTALLATION SEE FIGURE 10-5 | A/R | |
| | | RADIO COOLING SEE FIGURE 10-1 | 1 | |

* ITEMS MARKED WITH ASTERISK SUPPLIED WHEN COMPLETE RADIO IS PURCHASED.

SUNAIR T-5-DA RADIO INSTALLATION

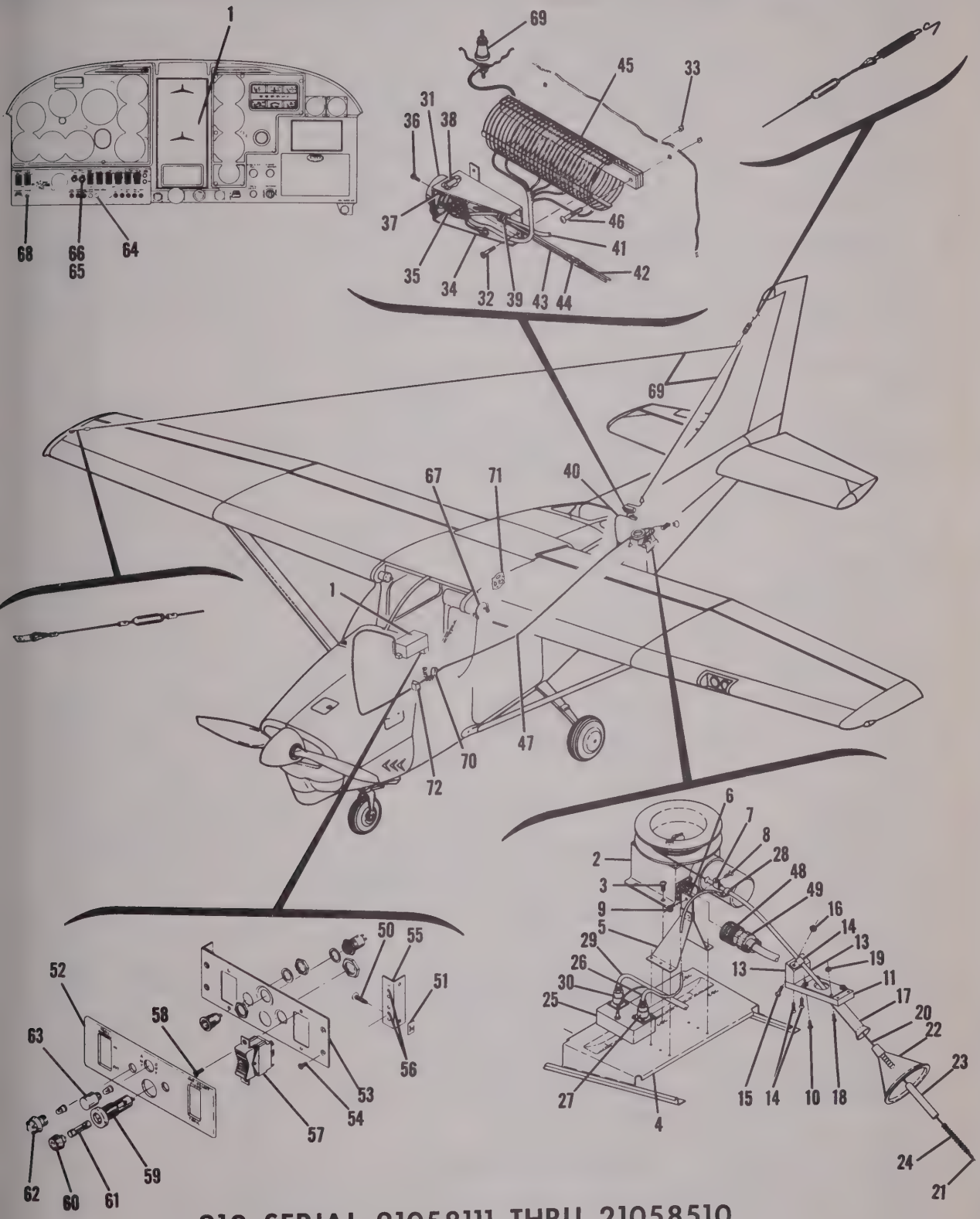


210 SERIAL 21058111 THRU 21058510

Figure 7-4. Sunair T-5-DA Radio Installation - Model 210

| FIGURE AND INDEX NO. | PART NUMBER | DESCRIPTION<br>1 2 3 4 5 6 7 | UNITS PER ASSY | USABLE ON CODE |
|---|---|---|---|---|
| 7-4- | | RADIO INSTALLATION-SUNAIR T-5-DA MODEL 210 ONLY | NP | |
| - 1 | T-5-DA | * TRANSCEIVER | 1 | |
| | | * RECEPTACLE 16 PIN | 1 | |
| | | ATTACHING PARTS | | |
| | S1022Z6-8 | SCREW | 4 | |
| | AN960-516 | WASHER | 8 | |
| | NAS446-2-3 | NUT | 4 | |
| | | ---*--- | | |
| | | REEL INSTALLATION-TRAILING ANTENNA | NP | |
| - 2 | SP-10010 | REEL ASSEMBLY-TRAILING ANTENNA | 1 | |
| | | ATTACHING PARTS | | |
| - 3 | AN520-416R8 | SCREW | 4 | |
| | | ---*--- | | |
| - 4 | 1270435-1 | BRACKET ASSY | 1 | |
| - 5 | 1270440-1 | TUBE SUPPORT ASSY | 1 | |
| - 6 | 1270440-2 | PLATE-INSULATOR | 1 | |
| | | ATTACHING PARTS | | |
| - 7 | AN742D4 | CLAMP | 1 | |
| - 8 | AN515-8R8 | SCREW | 1 | |
| - 9 | MS20365-832C | NUT | 1 | |
| | | ---*--- | | |
| | 0770653-2 | FAIRLEAD ASSY-REEL TUBE | 1 | |
| | | ATTACHING PARTS | | |
| - 10 | S1021Z8-8 | SCREW | 3 | |
| | | ---*--- | | |
| | 0770653-7 | MOUNTING BLOCK ASSY | 1 | |
| - 11 | 0770653-4 | MOUNTING BLOCK | 1 | |
| - 12 | 0770653-5 | SUPPORT-ANTENNA GUIDE | 1 | |
| | | ATTACHING PARTS | | |
| | AN507-832R10 | SCREW | 2 | |
| | | ---*--- | | |
| - 13 | 1270439-1 | TUBE-ANTENNA GUIDE | 1 | |
| | | ATTACHING PARTS | | |
| - 14 | AN742D4 | CLAMP | 1 | |
| - 15 | AN515-8R12 | SCREW | 1 | |
| - 16 | MS20365-832C | NUT | 1 | |
| | | ---*--- | | |
| - 17 | 0770041-1 | PLATE ASSY-REEL ANTENNA | 1 | |
| | | ATTACHING PARTS | | |
| - 18 | AN515-6R6 | SCREW | 4 | |
| - 19 | MS20365-632C | NUT | 4 | |
| | | ---*--- | | |
| - 20 | 0814308-2 | WIRE-TRAILING ANTENNA 100 FT. LONG ABOVE 2400 KC | 1 | |
| | 0814308-5 | WIRE-TRAILING ANTENNA 120 FT. LONG BELOW 2400 KC | 1 | |
| | | ATTACHING PARTS | | |
| - 21 | RA2487-2 | TERMINAL | 1 | |
| | | ---*--- | | |
| | 0770043-1 | DROGUE ASSY-TRAILING ANTENNA THRU 1963 | 1 | |
| | 0770697-1 | DROGUE ASSY-TRAILING ANTENNA 1964 AND ON | 1 | |
| - 22 | 0770043-2 | DROGUE THRU 1963 | 1 | |
| | 0770697-2 | DROGUE 1964 AND ON | 1 | |
| - 23 | 0770043-3 | RETAINER SPRING THRU 1963 | 1 | |
| | 0770697-3 | RETAINER SPRING 1964 AND ON | 1 | |
| - 24 | 0441021 | SPRING | 1 | |
| - 25 | 0812800-56 | INVERTER-RF | 1 | |
| | | ATTACHING PARTS | | |
| | AN520-8R8 | SCREW | 2 | |
| | | ---*--- | | |
| | | CABLE ASSY-INVERTOR TO TRAIL ANTENNA | NP | |
| - 26 | RG-58A/U | CABLE-COAXIAL BULK ITEM 17 INCHES LONG | AR | |
| - 27 | PL-259 | * PLUG INVERTER END | 1 | |
| | UG-175/U | * ADAPTER-COAX | 1 | |
| | AMP-31888 | TERMINAL TRAIL ANT END | 1 | |
| | | ATTACHING PARTS | | |
| | AN515-8R6 | SCREW | 1 | |
| - 28 | AN742D4 | CLAMP | 1 | |
| | MS20364-832C | NUT | 1 | |
| | | ---*--- | | |

CONTINUED ON NEXT PAGE

| FIGURE AND INDEX NO. | PART NUMBER | DESCRIPTION 1 2 3 4 5 6 7 | UNITS PER ASSY | USABLE ON CODE |
|---|---|---|---|---|
| 7-4- | | CABLE ASSY-INVERTER TO ANT SEL SW | NP | |
| - 29 | RG-58A/U | CABLE-COAXIAL BULK ITEM | AR | |
| | AMP-31882 | TERMINAL ANT SEL SW END | 1 | |
| - 30 | PL-259 | * PLUG INVERTER END | 1 | |
| | UG-175/U | * ADAPTER-COAX | 1 | |
| | | COIL INSTALLATION-LOADING | NP | |
| - 31 | 0770627-2 | LEDEX MOTOR ASSY | 1 | |
| | | ATTACHING PARTS | | |
| - 32 | AN515-8R18 | SCREW | 2 | |
| - 33 | MS20365-832C | NUT | 2 | |
| | | ---*--- | | |
| - 34 | 0770628-1 | BRACKET ASSY | 1 | |
| - 35 | A-46213-001 | MOTOR-LEDEX | 1 | |
| | | ATTACHING PARTS | | |
| - 36 | AN515-6R6 | SCREW | 5 | |
| - 37 | MS20365-632C | NUT | 5 | |
| | | ---*--- | | |
| - 38 | 30D192A1 | CAPACITOR | 1 | |
| - 39 | NAS435D6 | CLAMP | 1 | |
| | | ATTACHING PARTS | | |
| | S1022Z8-8 | SCREW | 1 | |
| | | ---*--- | | |
| - 40 | | CABLE ASSY-REAR COIL TAP SELECTOR TO CONTROL PANEL CABLE | NP | |
| - 41 | RG-58A/U | CABLE-COAXIAL BULK ITEM | AR | |
| | UG-89/U | * JACK-COAXIAL CONNECTS TO ANT SEL SW CABLE | 1 | |
| | S1367-1-6 | TERMINAL COIL END | 1 | |
| - 42 | | CABLE ASSY-DUST COVER TO LEDEX MOTOR CABLE | NP | |
| - 43 | | CABLE ASSY-LEDEX TO DUST COVER CABLE | NP | |
| | 26-4200-16S | * CONNECTOR ATTACHED TO DUST COVER | 1 | |
| - 44 | S1370-0 | DISCONNECT | 6 | |
| - 45 | 0812509-24 | COIL ASSY-LOADING | 1 | |
| | | ATTACHING PARTS | | |
| - 46 | S1021Z6-8 | SCREW | 2 | |
| | MS20364-832C | NUT | 2 | |
| | | ---*--- | | |
| - 47 | | CABLE ASSY-ANT REEL MOTOR TO OUT & IN SW ON CONTROL PANEL | NP | |
| - 48 | PL-112 | PLUG | 1 | |
| - 49 | MS3057-10B | CLAMP | 1 | |
| | 0770630-2 | CONTROL PANEL ASSY-REEL ANT | 1 | |
| | | ATTACHING PARTS | | |
| - 50 | S1021Z6-8 | SCREW | 4 | |
| - 51 | NAS446-2-3 | NUT | 4 | |
| | | ---*--- | | |
| - 52 | 0770635-1 | PLATE-CONTROL PANEL | 1 | |
| - 53 | 0770634-1 | PLATE-MOUNTING | 1 | |
| | | ATTACHING PARTS | | |
| - 54 | AN507-632R6 | SCREW | 4 | |
| | | ---*--- | | |
| - 55 | 0770634-2 | ANGLE ASSY | | |
| - 56 | NAS697A06L | NUTPLATE | | |
| - 57 | S1238-2-1 | SWITCH-ANTENNA SELECT | 1 | |
| | S1238-1-1 | SWITCH-TRAIL ANTENNA | 1 | |
| | | ATTACHING PARTS | | |
| - 58 | AN507-440R6 | SCREW | 2 | |
| | MS20365-440C | NUT | 2 | |
| | | ---*--- | | |
| | | CABLE ASSY-ANT SEL SW TO LEDEX MOTOR CABLE | NP | |
| | RG-58A/U | CABLE-COAXIAL BULK ITEM 24 INCHES LONG | AR | |
| | UG-88C/U | * PLUG-COAXIAL | 1 | |
| | | CABLE ASSY-ANT SEL SW TO TRANSCEIVER CABLE | NP | |
| | RG-58A/U | CABLE-COAXIAL BULK ITEM 18 INCHES LONG | AR | |

CONTINUED ON NEXT PAGE

| FIGURE AND INDEX NO. | PART NUMBER | DESCRIPTION 1 2 3 4 5 6 7 | UNITS PER ASSY | USABLE ON CODE |
|---|---|---|---|---|
| 7-4- | UG-89/U | * JACK-COAXIAL | 1 | |
| - 59 | S1090-2 | FUSE HOLDER ASSY | 1 | |
| - 60 | S1090-11 | CAP-5A | 1 | |
| - 61 | S1091-5 | FUSE-5A | 1 | |
| - 62 | VM-800-2 | LIGHT ASSY | 2 | |
| - 63 | VM-911M-4A | LIGHT ASSY | 1 | |
| | UG-88C/U | * PLUG-ATTACHES TO RF CABLE ON TUNER AND MATES WITH UG-89/U CONNECTOR ON ANT SEL SW CABLE. | 1 | |
| - 64 | S1232-15 | CIRCUIT BREAKER THRU 1963 ONLY | 2 | |
| | S1360-15 | CIRCUIT BREAKER 1964 AND ON | 1 | |
| - 65 | R-12 1/2-75-RS34 | RHEOSTAT | 1 | |
| - 66 | S1163-2 | KNOB-RHEOSTAT | 1 | |
| - 67 | 0770039-1 | HEADSET | 1 | |
| - 68 | S1103-1 | PHONE JACK | 1 | |
| - 69 | | MF & HF COMM ANTENNA INSTALLATION SEE FIGURE 8-5 | 1 | |
| - 70 | | MICROPHONE INSTALLATION SEE FIGURE 9-4 | 1 | |
| - 71 | | SPEAKER INSTALLATION SEE FIGURE 9-3 | 1 | |
| - 72 | | RADIO NOISE FILTER INSTALLATION SEE FIGURE 10-5 | A/R | |
| | | RADIO COOLING SEE FIGURE 10-1 | 1 | |

* ITEMS MARKED WITH ASTERISK SUPPLIED WHEN COMPLETE RADIO IS PURCHASED.

SUNAIR T-5-RA OR T-10-R RADIO INSTALLATION

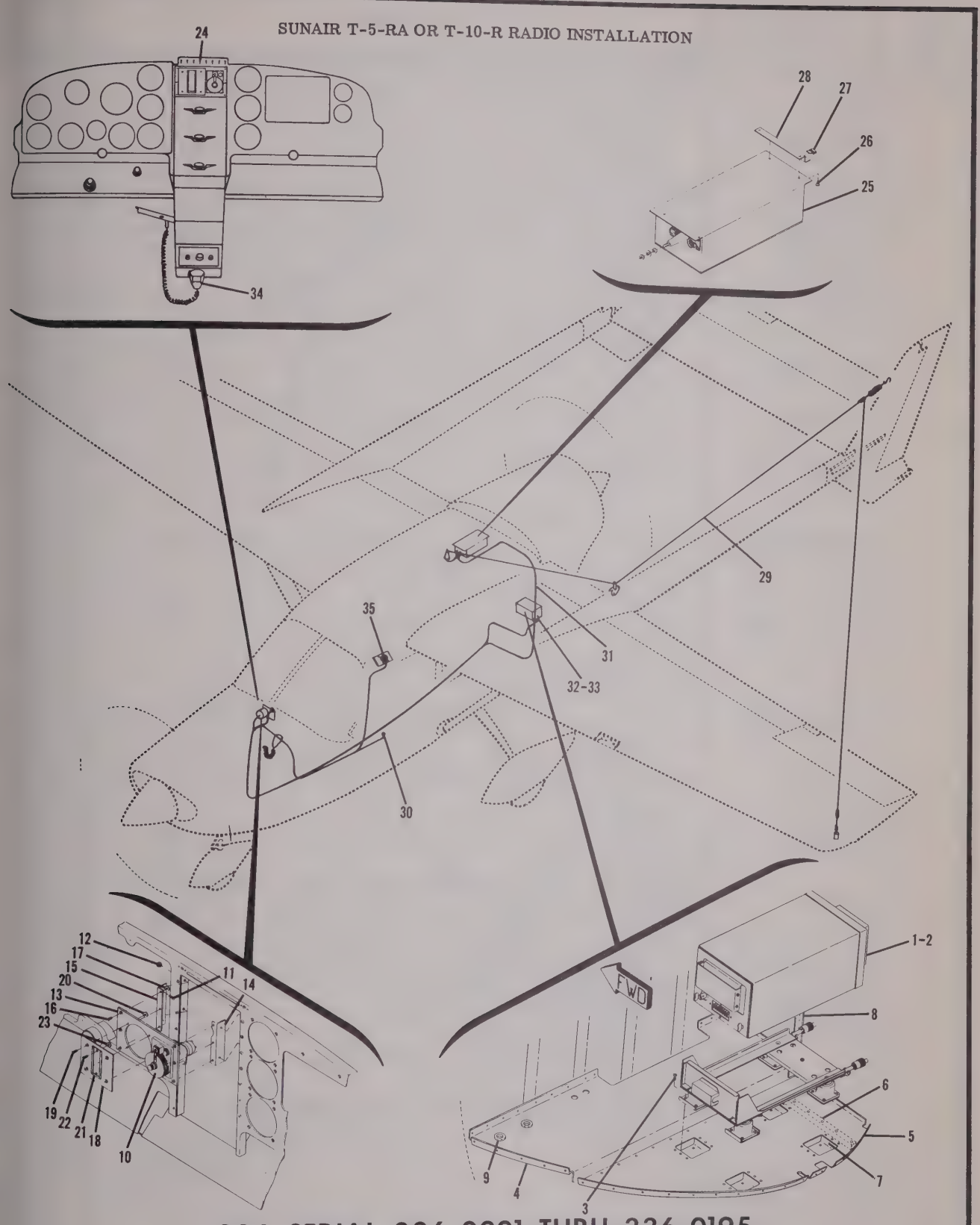


336 SERIAL 336-0001 THRU 336-0195

Figure 7-5. Sunair T-5-RA or T-10-R Radio Installation

| FIGURE AND INDEX NO. | PART NUMBER | DESCRIPTION<br>1 2 3 4 5 6 7 | UNITS PER ASSY | USABLE ON CODE |
|---|---|---|---|---|
| 7-5- | | RADIO INSTALLATION-SUNAIR T-5-DA 336 ONLY | NP | |
| - 1 | T-5-RA | * TRANSCEIVER | AR | |
| - 2 | T-10-R | * TRANSCEIVER | AR | |
| | | ATTACHING PARTS | | |
| - 3 | AN515-8R8 | SCREW | 16 | |
| | | ---*--- | | |
| - 4 | 1470078-2 | SHELF-UPPER | 1 | |
| - 5 | 1470078-10 | SHELF ASSY-LOWER | 1 | |
| | 1470078-5 | SHELF | 1 | |
| - 6 | 1470078-8 | ANGLE | 4 | |
| - 7 | 1470078-9 | SUPPORT ASSY | 1 | |
| | 1470078-6 | SUPPORT | 4 | |
| | NAS698A08 | NUTPLATE | 1 | |
| - 8 | 1470078-4 | POST | 2 | |
| - 9 | MS35489-11S | GROMMET | 1 | |
| - 10 | 32338 | * CONTROL HEAD | 1 | |
| | 1470083-1 | PANEL ASSY | | |
| | | ATTACHING PARTS | | |
| - 11 | AN515-6R6 | SCREW | 4 | |
| - 12 | MS20365-632C | NUT | 4 | |
| | | ---*--- | | |
| - 13 | 1470083-2 | PANEL | 1 | |
| - 14 | 1470083-3 | ANGLE-RH | 1 | |
| | | ATIACHING PARTS | | |
| | AN507-632R8 | SCREW | 3 | |
| | MS20365-632C | NUT | 3 | |
| | | ---*--- | | |
| - 15 | 1470083-4 | ANGLE-LH | 1 | |
| | | ATTACHING PARTS | | |
| - 16 | AN507-632R8 | SCREW | 3 | |
| - 17 | MS20365-632C | NUT | 3 | |
| | | ---*--- | | |
| - 18 | 1470135-4 | PLATE ASSY-FREQUENCY CARD HOLDER | 1 | |
| | | ATTACHING PARTS | | |
| - 19 | AN515-6R6 | SCREW | 4 | |
| - 20 | MS20365-632C | NUT | 4 | |
| | | ---*--- | | |
| | 1470135-5 | PLATE-FREQUENCY CARD HOLDER | 1 | |
| - 21 | | * FREQUENCY CARD HOLDER | 1 | |
| | | ATTACHING PARTS | | |
| - 22 | AN507-440R6 | SCREW | 2 | |
| - 23 | MS20365-440C | NUT | 2 | |
| | | ---*--- | | |
| - 24 | | TRANSMITTER SELECTOR SWITCH INSTALLATION SEE FIGURE 9-1 | 1 | |
| | | RADIO COOLING INSTALLATION SEE FIGURE 10-5 | 1 | |
| - 25 | LU10-28C | ANTENNA LOAD UNIT | 1 | |
| | | ATTACHING PARTS | | |
| - 26 | S1021Z6-4 | SCREW | 4 | |
| - 27 | NAS448-1-3J | NUT | 4 | |
| - 28 | 1470135-3 | SUPPORT | 2 | |
| | | ---*--- | | |
| - 29 | | MF & HF FIXED WIRE ANTENNA INSTALLATION SEE FIGURE 8-5 | 1 | |
| - 30 | S1360-8 | CIRCUIT BREAKER | 1 | |
| - 31 | | CABLE ASSY ANT LOADING UNIT TO CONTROL HEAD | NP | |
| | AMP165-10 | PLUG | 1 | |
| - 32 | | CABLE ASSY TRANSCEIVER TO CONTROL HEAD | NP | |
| | 26-4200-16S | PLUG | 1 | |
| - 33 | | CABLE ASSY ANT LOADING UNIT TO TRANSCEIVER | NP | |
| | RG-58A/U | COAXIAL CABLE-BULK ITEM | AR | |
| | PL-259 | PLUG-COAXIAL | 1 | |
| | UG-175/U | ADAPTER | 1 | |
| - 34 | | MICROPHONE INSTALLATION SEE FIGURE 9-4 | 1 | |
| - 35 | | SPEAKER INSTALLATION SEE FIGURE 9-3 | 1 | |

* ITEMS MARKED WITH ASTERISK SUPPLIED WHEN COMPLETE RADIO IS PURCHASED

SUNAIR T-10-R RADIO INSTALLATION

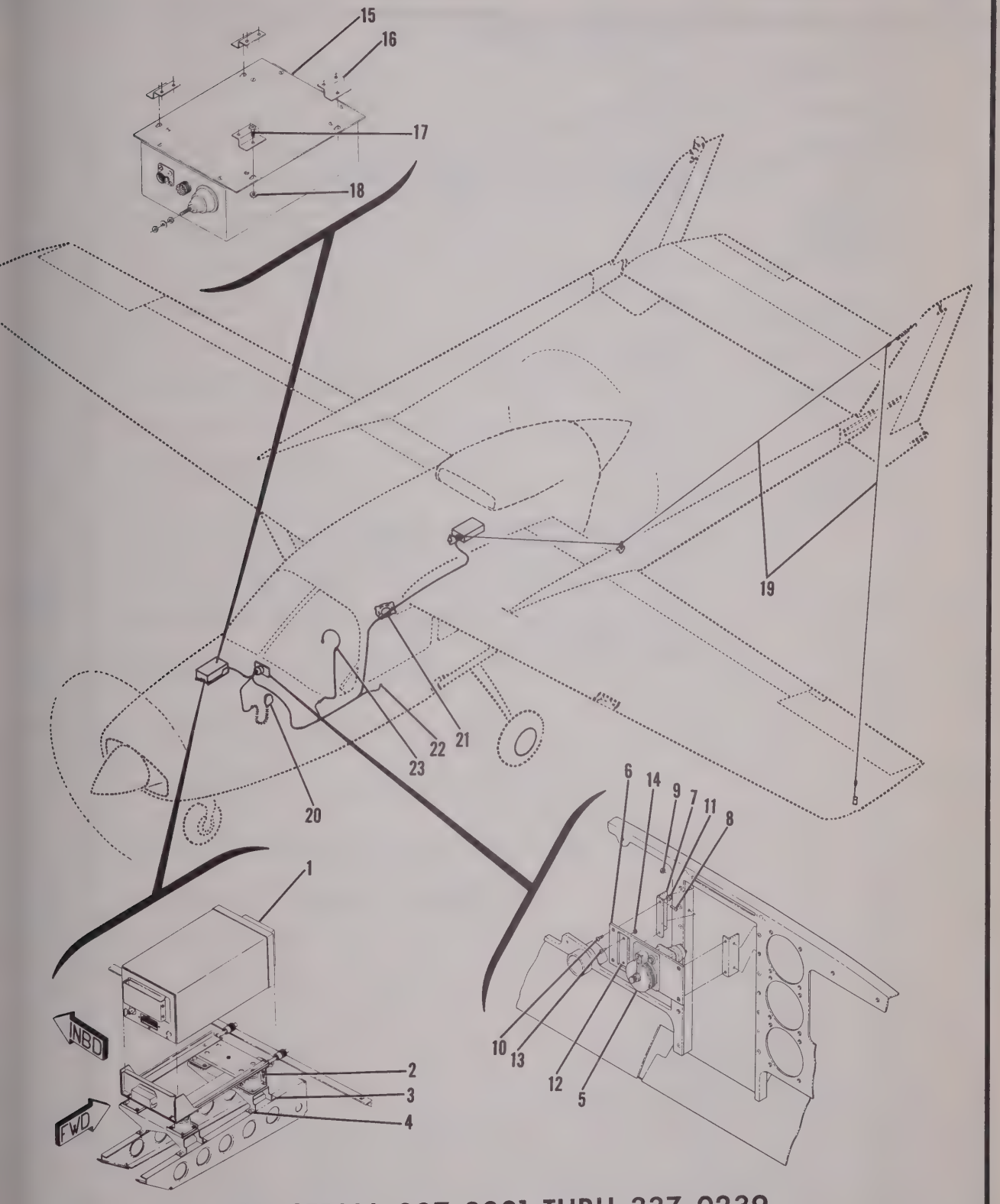


## 337 SERIAL 337-0001 THRU 337-0239

Figure 7-6. Sunair T-10-R Radio Installation

| FIGURE AND INDEX NO. | PART NUMBER | DESCRIPTION<br>1 2 3 4 5 6 7 | UNITS PER ASSY | USABLE ON CODE |
|---|---|---|---|---|
| 7-6- | | RADIO INSTALLATION - SUNAIR T-10-R 337 ONLY---------- | N/P | |
| - 1 | T-10-R | TRANSCEIVER & SHOCKMOUNT SUNA ---------- | 1 | |
| | | ATTACHING PARTS | | |
| - 2 | AN515-8R8 | SCREW ---------- | 8 | |
| | | ---*--- | | |
| - 3 | 1513633-1 | SUPPORT ASSY ---------- | 2 | |
| | | ATTACHING PARTS | | |
| - 4 | AN515-8R8 | SCREW ---------- | 8 | |
| | MS20365-832C | NUT ---------- | 8 | |
| | | ---*--- | | |
| - 5 | 32338 | FREQUENCY SELECTOR SUNA ---------- | 1 | |
| | 1513634-1 | MOUNTING PLATE ASSY ---------- | 1 | |
| - 6 | 1513634-2 | PLATE ---------- | 1 | |
| - 7 | 1513634-3 | ANGLE ---------- | 2 | |
| - 8 | AN507-632R8 | SCREW ---------- | 4 | |
| - 9 | MS20365-632C | NUT ---------- | 4 | |
| | | ATTACHING PARTS | | |
| - 10 | S1022Z6-8 | SCREW ---------- | 4 | |
| - 11 | NAS446-2-3 | NUT ---------- | 4 | |
| | | ---*--- | | |
| - 12 | NO PART NO. | FREQUENCY CARD HOLDER-----SUNA---------- | 1 | |
| | | ATTACHING PARTS | | |
| - 13 | AN507-440R4 | SCREW ---------- | 2 | |
| - 14 | MS20365-440C | NUT ---------- | 2 | |
| | | ---*--- | | |
| - 15 | AC-10-28C | ANTENNA COUPLER SUNA ---------- | 1 | |
| | | ATTACHING PARTS | | |
| - 16 | 1512605-1 | SUPPORT ---------- | 4 | |
| - 17 | S1021Z6-4 | SCREW ---------- | 4 | |
| - 18 | NAS488-1-3 | J NUT ---------- | 4 | |
| | | ---*--- | | |
| - 19 | | MF & HF FIXED WIRE ANTENNA INSTALLATION SEE FIGURE 8-5 | 1 | |
| - 20 | | MICROPHONE INSTALLATION SEE FIGURE 9-4 ---------- | 1 | |
| - 21 | | SPEAKER INSTALLATION SEE FIGURE 9-3 ---------- | 1 | |
| | | TRANSMITTER SELECTOR SWITCH INSTALLATION-----SEE FIGURE 9-1 | 1 | |
| | | RADIO NOISE FILTER INSTALLATION SEE FIGURE 10-5 ---- | 1 | |
| - 22 | S1360-8 | CIRCUIT BREAKER ---------- | 1 | |
| | | DROPPING RESISTOR - FLT INST & RADIO DIAL LT ---------- | 1 | |
| | | SEE FIGURE 10-2 | | |
| - 23 | | HEADSET INSTALLATION SEE FIGURE 9-5 ---------- | 1 | |

# SECTION VIII

# ANTENNA SYSTEMS

TABLE OF CONTENTS


| Figure | | Page |
|---|---|---|
| 8-1 | VHF Antenna Installations | 8-2 |
| 8-2 | Omni Antenna Installations | 8-4 |
| 8-3 | Glide Slope Antenna Installations | 8-10 |
| 8-4 | Marker Beacon Antenna Installations | 8-12 |
| 8-5 | Medium & High Frequency Fixed Wire Antennas | 8-14 |
| 8-6 | ADF (Sense) Antenna Installations | 8-17 |

VHF ANTENNA INSTALLATIONS

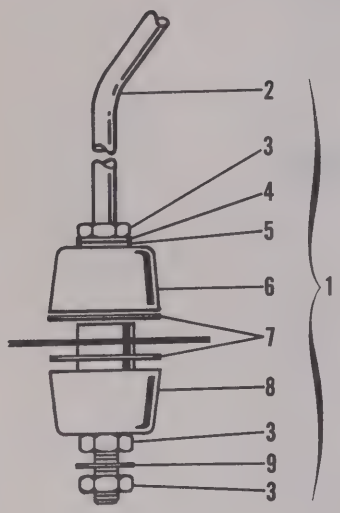


INSTALLATION **A**
ALL MODELS

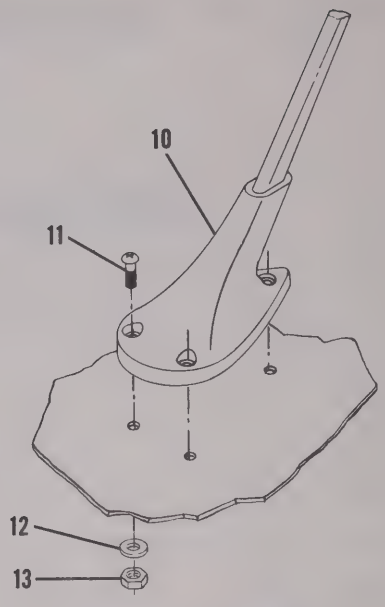


INSTALLATION **B**
ALL MODELS EXCEPT 336 & 337

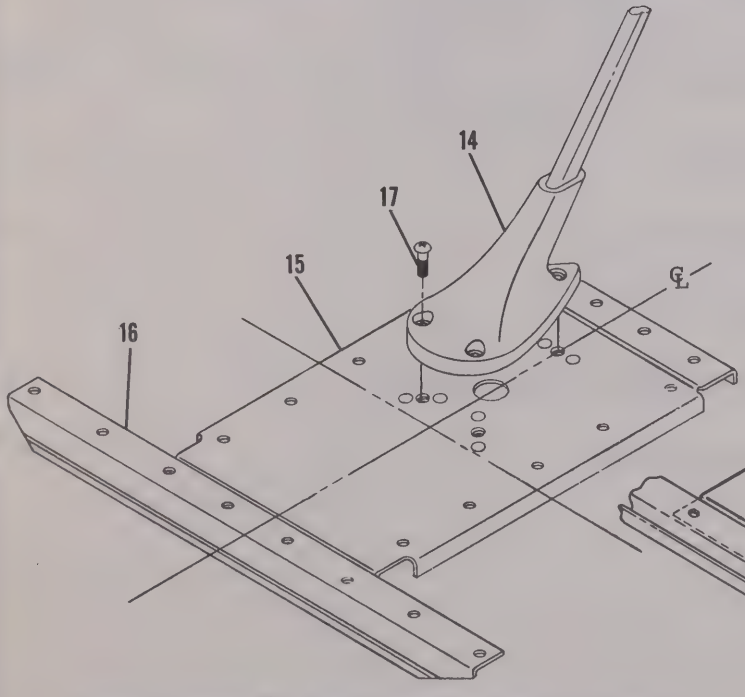


INSTALLATION **C** -336 & 337 STANDARD LOCATION

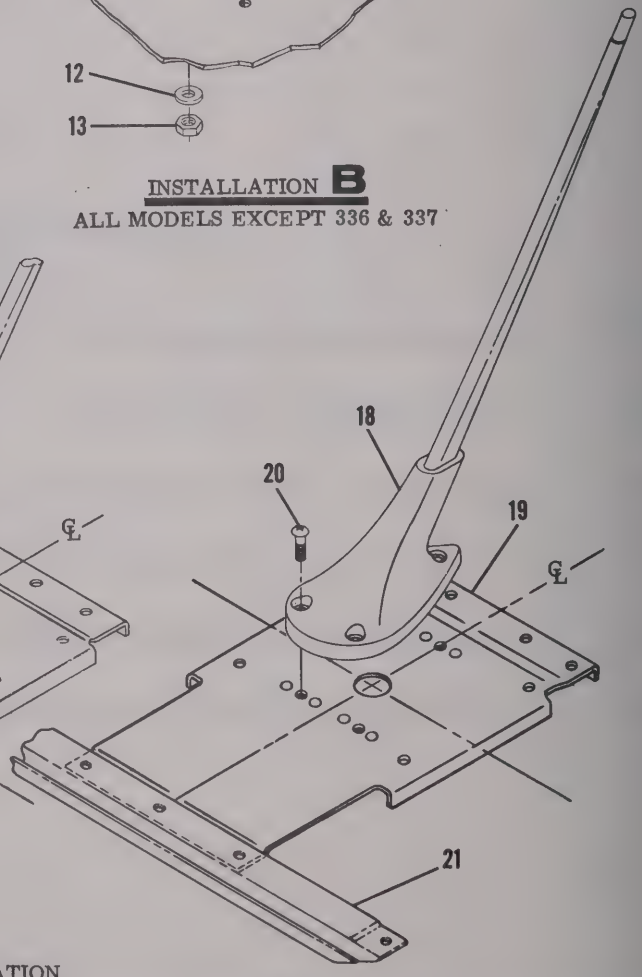


INSTALLATION **D** -336 & 337 ALTERNATE LOCATION

Figure 8-1. VHF Antenna Installations

| FIGURE AND INDEX NO. | PART NUMBER | DESCRIPTION<br>1 2 3 4 5 6 7 | UNITS PER ASSY | USABLE ON CODE |
|---|---|---|---|---|
| 8-1- | | VHF ANTENNA INSTALLATIONS | N/P | |
| | | VHF ANTENNA INSTALLATION A | | |
| - 1 | 1270042-1 | VHF ANTENNA ASSEMBLY | NP | |
| - 2 | 1270042-2 | ANTENNA ROD | 1 | |
| | | ATTACHING PARTS | 1 | |
| - 3 | NAS345-10 | NUT | 3 | |
| - 4 | AN960-10L | WASHER-PLAIN | 1 | |
| - 5 | S350 | WASHER-SEALING | 1 | |
| - 6 | X-88 | BUSHING | 1 | |
| - 7 | 1270043-1 | WASHER-FIBER | 2 | |
| - 8 | X-100 | BUSHING | 1 | |
| - 9 | AN936A10 | LOCKWASHER | 1 | |
| | | ---*--- | | |
| | | VHF ANTENNA INSTALLATION B---- ALL MODELS EXCEPT 336 & 337 | N/P | |
| - 10 | 1470053-1 | VHF ANTENNA ASSEMBLY | 1 | |
| | | ATTACHING PARTS | | |
| - 11 | AN520-10R8 | SCREW | 3 | |
| - 12 | AN936A10 | WASHER | 3 | |
| - 13 | MS20365-1032C | NUT | 3 | |
| | | ---*--- | | |
| | | VHF ANTENNA INSTALLATION C---- 336 & 337 STANDARD | N/P | |
| | | LOCATION ONLY | | |
| - 14 | 1470053-1 | VHF ANTENNA ASSEMBLY | 1 | |
| | | ATTACHING PARTS | | |
| - 15 | 1470114-1 | DOUBLER ASSY | 1 | |
| | 1470114-2 | DOUBLER | 1 | |
| | NAS686A3 | NUTPLATE | 3 | |
| - 16 | 1470114-3 | STIFFENER | 1 | |
| - 17 | AN520-10R8 | SCREW | 3 | |
| | | ---*--- | | |
| | | VHF ANTENNA INSTALLATION D---- 336 & 337 ALTERNATE | N/P | |
| | | LOCATION ONLY | | |
| - 18 | 1470053-1 | VHF ANTENNA ASSEMBLY | 1 | |
| | | ATTACHING PARTS | | |
| - 19 | 1470123-4 | DOUBLER ASSY | 1 | |
| | 1470123-2 | DOUBLER | 1 | |
| | NAS686A3 | NUTPLATE | 3 | |
| - 20 | AN520-10R8 | SCREW | 3 | |
| - 21 | 1470008-3 | STIFFENER | 1 | |
| | | ---*--- | | |

OMNI ANTENNA INSTALLATION

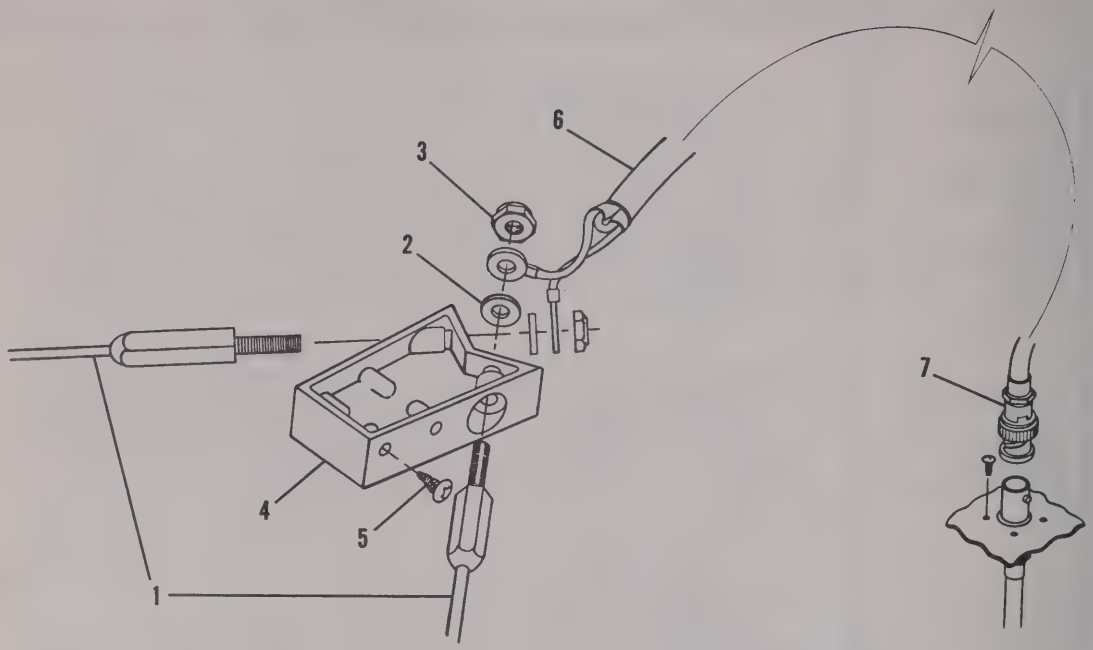


INSTALLATION **A** - MODEL 150 THRU 1963 ONLY

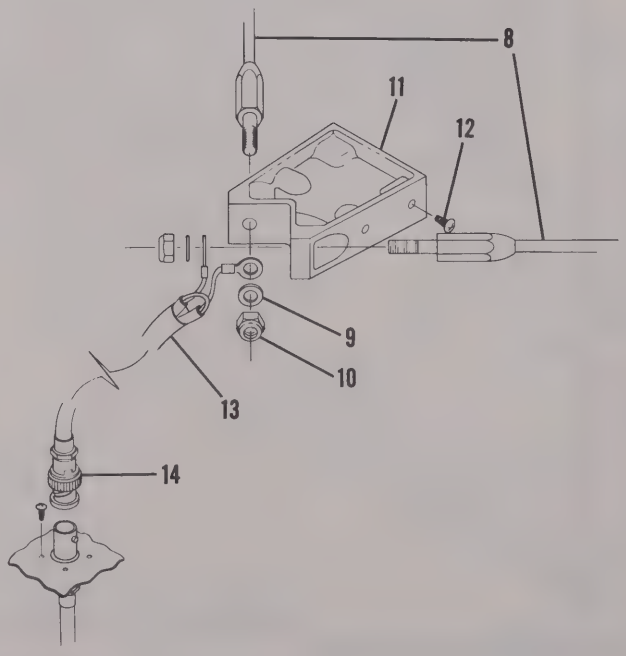


INSTALLATION **B** - ALL 172 & P172 MODELS AND 150 1964 THRU 1965

Figure 8-2. Omni Antenna Installation (Sheet 1 of 4)

OMNI ANTENNA INSTALLATION

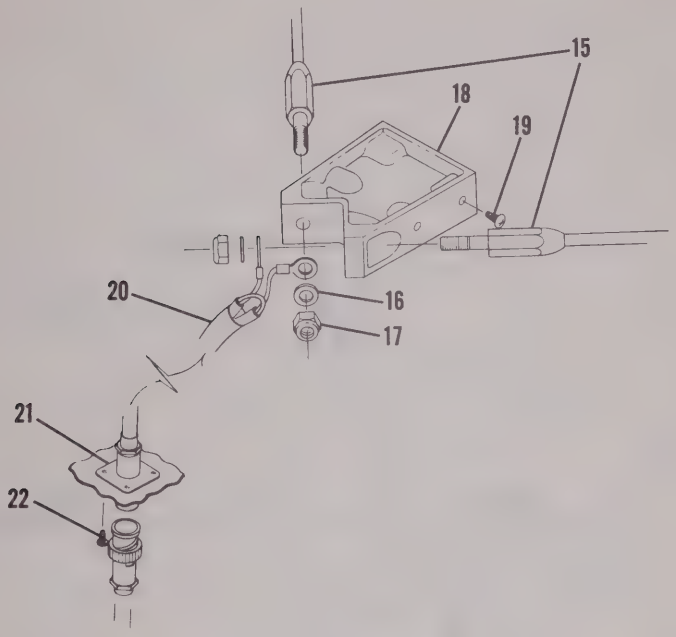


INSTALLATION C - MODELS 180, 182, 185, 205, 206, P206, U206, TP206, TU206, 210 & T210 ONLY

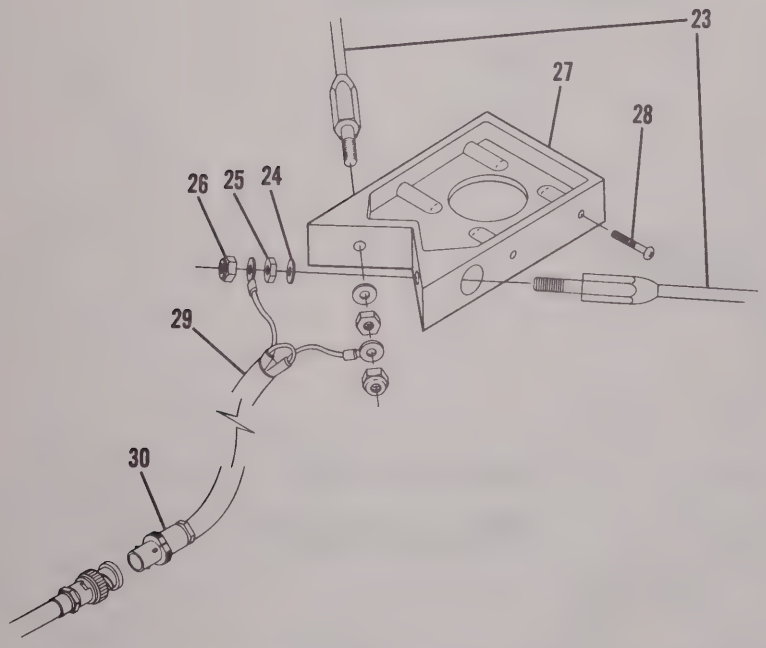


INSTALLATION D - MODELS 336 & 337 ONLY

Figure 8-2. Omni Antenna Installation (Sheet 2 of 4)

OMNI ANTENNA INSTALLATION

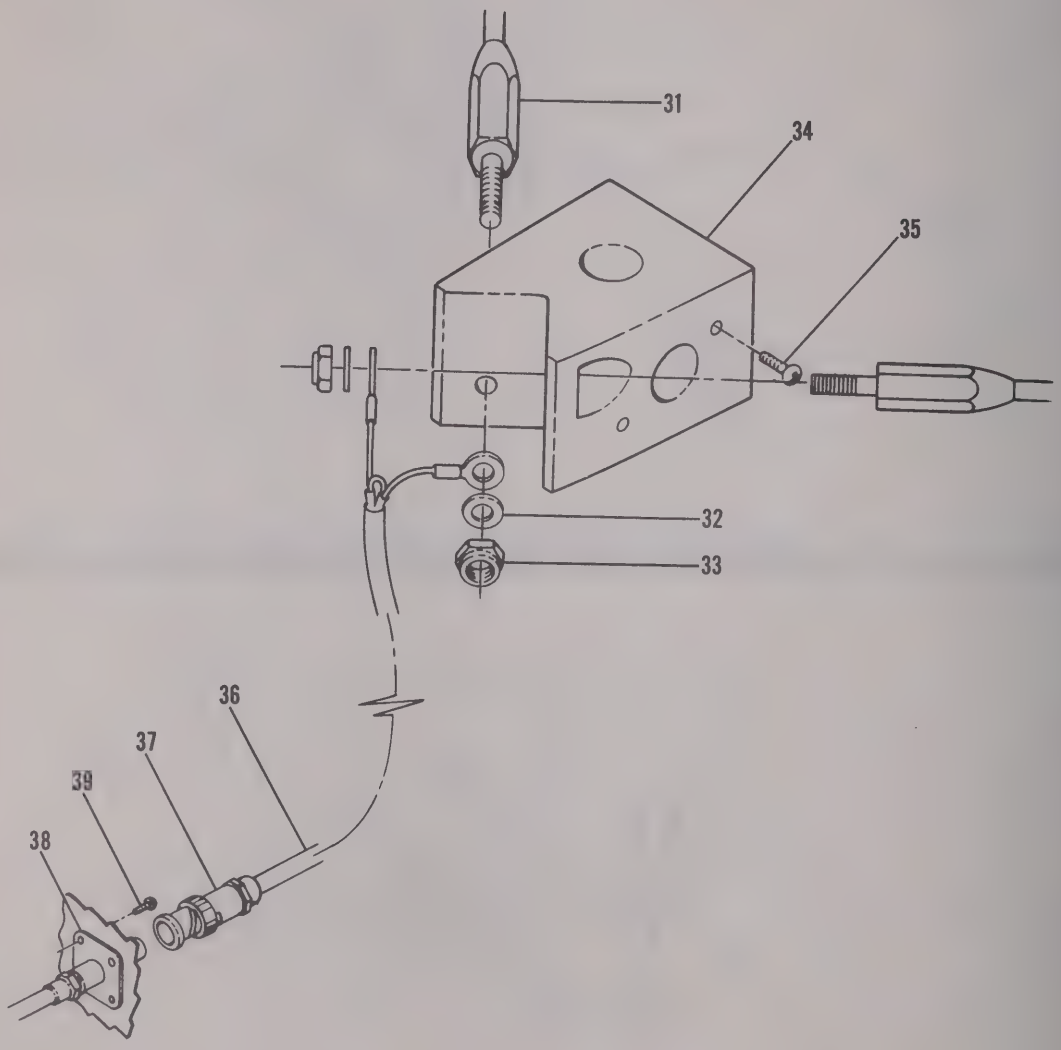


INSTALLATION **E**

MODEL 150 - 1966 & ON

Figure 8-2. Omni Antenna Installation (Sheet 3 of 4)

OMNI ANTENNA INSTALLATION

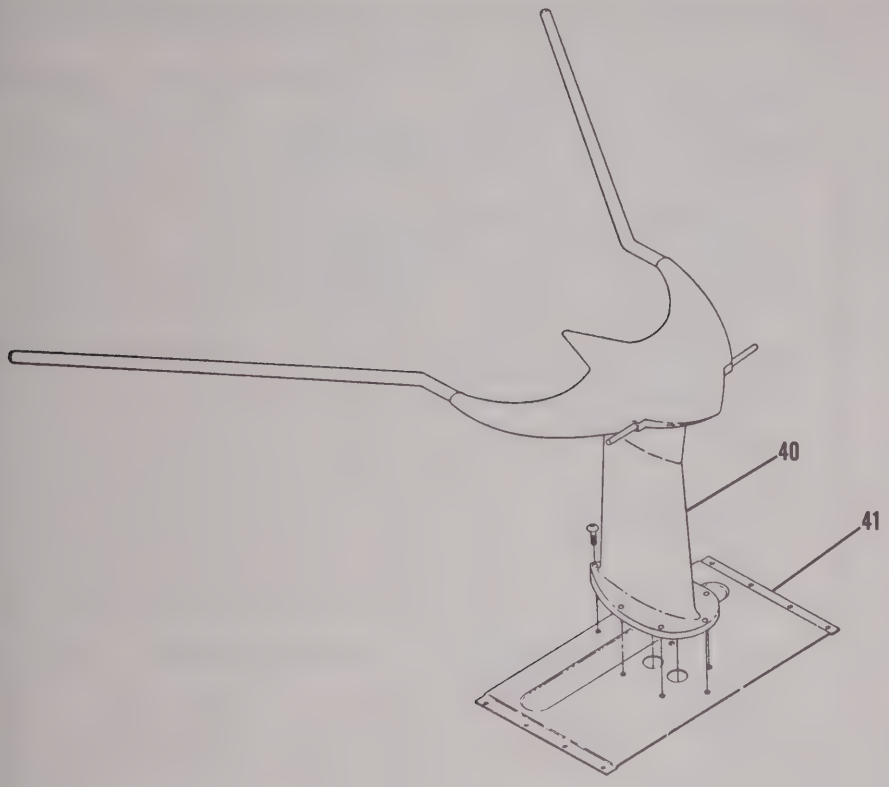


INSTALLATION F - 182 ONLY

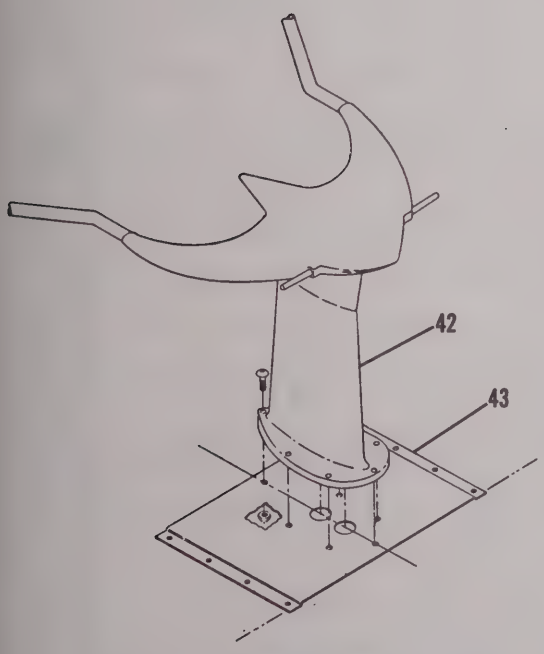


INSTALLATION G - 205 & 210 ONLY

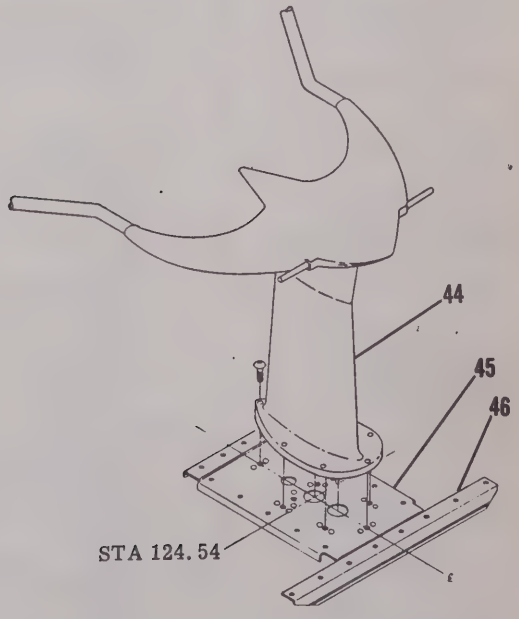


INSTALLATION H - 336 ONLY

Figure 8-2. Omni Antenna Installation (Sheet 4 of 4)

| FIGURE AND INDEX NO. | PART NUMBER | DESCRIPTION<br>1 2 3 4 5 6 7 | UNITS PER ASSY | USABLE ON CODE |
|---|---|---|---|---|
| 8-2- | | OMNI ANTENNA INSTALLATION | N/P | |
| | | OMNI-ANTENNA INSTALLATION A 150 THRU 1963 ONLY | N/P | |
| - 1 | 1270012-1 | ROD-ANTENNA STRAIGHT | 2 | |
| | | ATTACHING PARTS | | |
| - 2 | AN960-10L | WASHER | 2 | |
| - 3 | MS20365-1032C | NUT | 2 | |
| | | ---*--- | | |
| - 4 | 0570012-1 | BLOCK-MOUNTING | 1 | |
| | | ATTACHING PARTS | | |
| - 5 | S1021Z8-6 | SCREW | 4 | |
| | | ---*--- | | |
| - 6 | 0570013-3 | BALUN STUB ASSY | 1 | |
| - 7 | UG-88C/U | PLUG-COAXIAL | 1 | |
| | | OMNI-ANTENNA INSTALLATION B 1963 & ON 150 MODELS AND ALL 172 & P172 MODELS ONLY | N/P | |
| - 8 | 1270012-1 | ROD-ANTENNA STRAIGHT | 2 | |
| | | ATTACHING PARTS | | |
| - 9 | AN960-10L | WASHER | 2 | |
| - 10 | MS20365-1032C | NUT | 2 | |
| | | ---*--- | | |
| - 11 | 0570026-1 | BLOCK-MOUNTING | 1 | |
| | | ATTACHING PARTS | | |
| - 12 | S1021Z8-6 | SCREW | 4 | |
| | | ---*--- | | |
| - 13 | 0570013-1 | BALUN STUB ASSY | 1 | |
| - 14 | UG-88C/U | PLUG-COAXIAL | 1 | |
| | | OMNI-ANTENNA INSTALLATION C 180,182,185,205,206, P206, U206 & 210 MODELS ONLY | N/P | |
| - 15 | 1270012-1 | ROD-ANTENNA STRAIGHT | 2 | |
| | | ATTACHING PARTS | | |
| - 16 | AN960-10L | WASHER | 2 | |
| - 17 | MS20365-1032C | NUT | 2 | |
| | | ---*--- | | |
| - 18 | 0570026-1 | BLOCK-MOUNTING | 1 | |
| | | ATTACHING PARTS | | |
| - 19 | S1021Z8-8 | SCREW | 4 | |
| | | ---*--- | | |
| - 20 | 1270013-1 | BALUN STUB ASSY | 1 | |
| - 21 | UG291/U | PLUG-COAXIAL | 1 | |
| | | ATTACHING PARTS | | |
| - 22 | AN520-3R4 | SCREW | 4 | |
| | | ---*--- | | |
| | | OMNI-ANTENNA INSTALLATION D 336 & 337 ONLY | N/P | |
| - 23 | 1270012-1 | ROD-ANTENNA STRAIGHT | 2 | |
| | | ATTACHING PARTS | | |
| - 24 | AN960-10L | WASHER | 2 | |
| - 25 | AN345-10 | NUT | 2 | |
| - 26 | MS20365-1032C | NUT | 2 | |
| | | ---*--- | | |
| - 27 | 1470060-1 | BLOCK-MOUNTING | 1 | |
| | | ATTACHING PARTS | | |
| - 28 | S1021Z8-6 | SCREW | 4 | |
| | | ---*--- | | |
| - 29 | 1270013-1 | BALUN STUB ASSY | 1 | |
| - 30 | UG-89/U | PLUG-COAXIAL | 1 | |
| | | OMNI-ANTENNA INSTALLATION E 150 MODELS - 1966 & ON | N/P | |
| - 31 | 1270012-1 | ROD-ANTENNA STRAIGHT WHEN EXHAUSTED USE 1270012-8 | 2 | |
| | | ATTACHING PARTS | | |
| - 32 | AN960-10L | WASHER | 2 | |
| - 33 | MS20365-1032C | NUT | 2 | |
| | | ---*--- | | |
| - 34 | 0431016-1 | BLOCK - MOUNTING | 1 | |
| | | ATTACHING PARTS | | |
| - 35 | S1021Z8-6 | SCREW | 3 | |
| | | ---*--- | | |
| - 36 | 0570013-3 | BALUN STUB ASSY | 1 | |
| - 37 | UG88C/U | PLUG - COAXIAL | 1 | |
| - 38 | UG-291/U | PLUG - COAXIAL | 1 | |
| | | ATTACHING PARTS | | |
| - 39 | AN515-3R4 | SCREW | 4 | |
| | | ---*--- | | |

CONTINUED ON NEXT PAGE

| FIGURE AND INDEX NO. | PART NUMBER | DESCRIPTION<br>1 2 3 4 5 6 7 | UNITS PER ASSY | USABLE ON CODE |
|---|---|---|---|---|
| 8-2- | | A-13B ANTENNA INSTALLATION F 182 ONLY | N/P | |
| - 40 | A-13B | ANTENNA-OMNIRANGE | 1 | |
| - 41 | 0770685-1 | DOUBLER | 1 | |
| | | A-13B ANTENNA INSTALLATION G 205 & 210 ONLY | N/P | |
| - 42 | A-13B | ANTENNA-OMNIRANGE | 1 | |
| - 43 | 1270447-1 | DOUBLER | 1 | |
| | | A-13B ANTENNA INSTALLATION H 336 ONLY | N/P | |
| - 44 | A-13B | ANTENNA-OMNIRANGE | 1 | |
| - 45 | 1470114-1 | DOUBLER A | 1 | |
| | 1470114-2 | DOUBLER | 1 | |
| - 46 | 1470114-3 | STIFFENER | 1 | |
| | NAS686-A3 | NUTPLATE | 8 | |

GLIDE SLOPE ANTENNA INSTALLATION

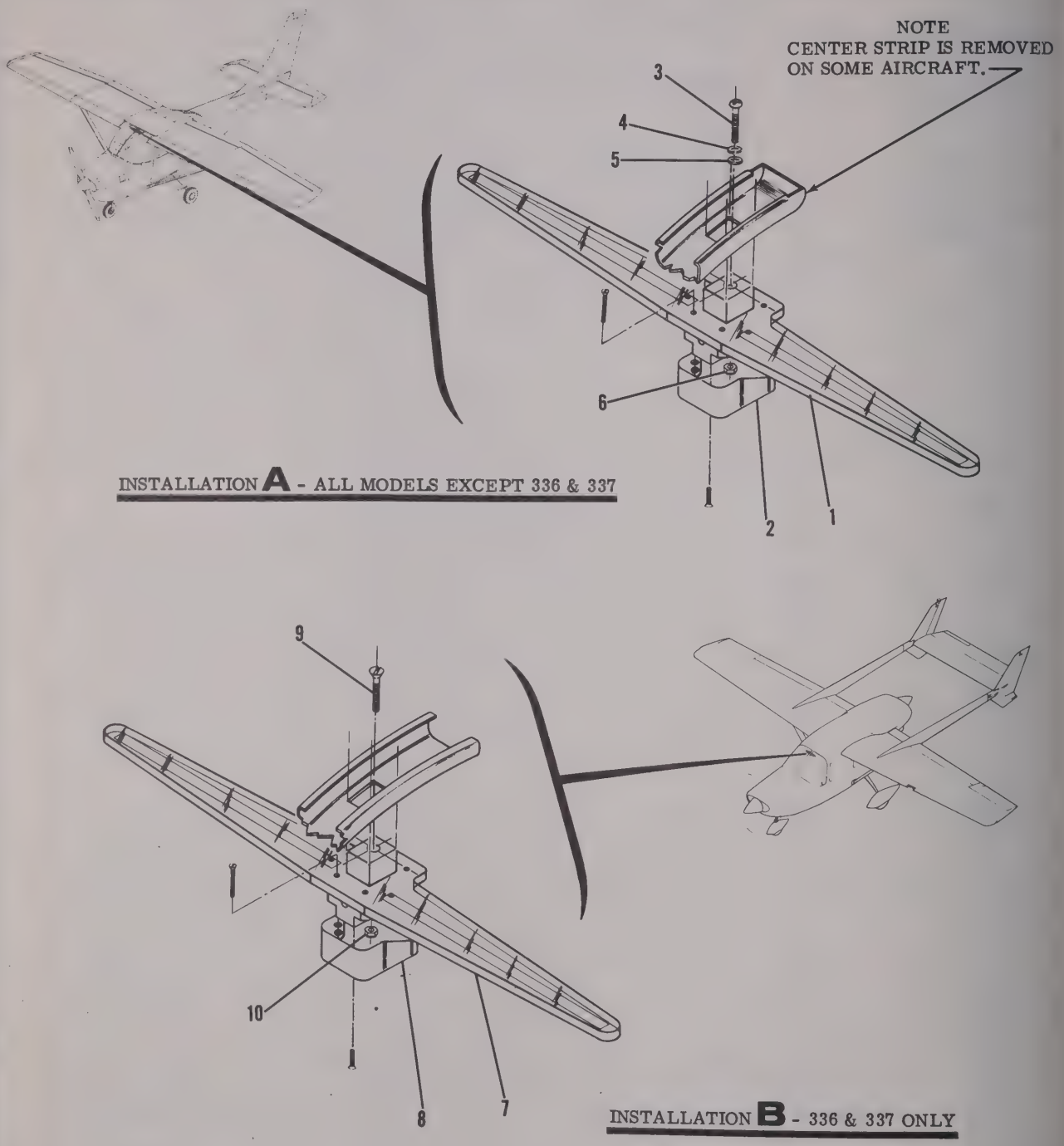


Figure 8-3. Glide Slope Antenna Installation

| FIGURE AND INDEX NO. | PART NUMBER | DESCRIPTION<br>1 2 3 4 5 6 7 | UNITS PER ASSY | USABLE ON CODE |
|---|---|---|---|---|
| 8-3- | | UHF GLIDE SLOPE ANTENNA INSTALLATIONS---------- | NP | |
| | | UHF GLIDE SLOPE ANTENNA INSTALLATION A EXCEPT 337 ALL MODELS ---- | NP | |
| - 1 | 1200098-1 | GLIDE SLOPE ANTENNA ASSEMBLY---------- | 1 | |
| - 2 | 1200096-1 | COVER ---------- | 1 | |
| | | ATTACHING PARTS | | |
| - 3 | NAS221-19 | SCREW ---------- | 1 | |
| - 4 | AN960-10L | WASHER ---------- | 1 | |
| - 5 | S350 | WASHER ---------- | 1 | |
| - 6 | MS20364-1032C | NUT ---------- | 1 | |
| | | ---*--- | | |
| | | UHF GLIDE SLOPE ANTENNA INSTALLATION B & 337 ONLY 336 --------- | N/P | |
| - 7 | 1200098-1 | GLIDE SLOPE ANTENNA ASSEMBLY---------- | 1 | |
| - 8 | 1200096-1 | COVER ---------- | 1 | |
| | | ATTACHING PARTS | | |
| - 6 | AN509-10R32C | SCREW ---------- | 1 | |
| - 7 | MS20365-1032 | NUT ---------- | 1 | |
| | | ---*--- | | |

MARKER BEACON ANTENNA INSTALLATIONS

INSTALLATION **A**

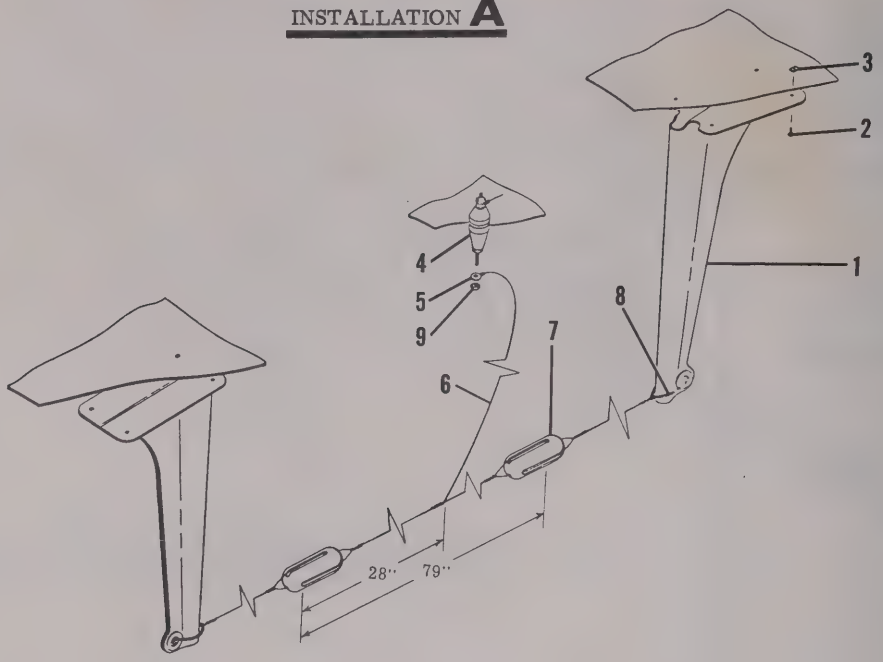


INSTALLATION **B**

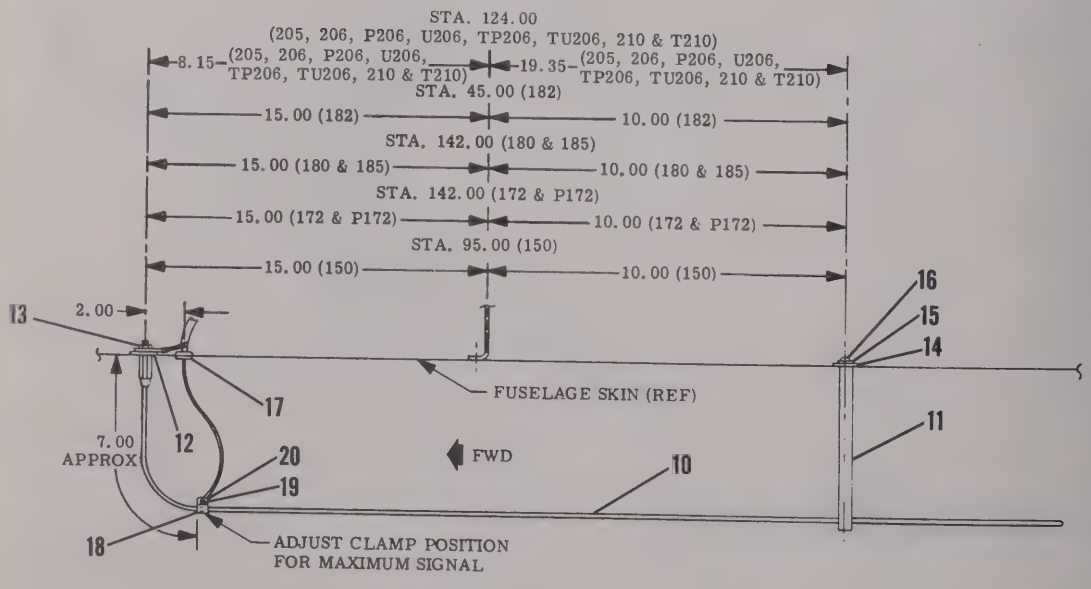


NOTES:
1. LOCATE ON ℄ OF SHIP FOR MODELS 150, 172, P172, 180 & 185.
2. LOCATE AT 2.00 R. B. L. FOR MODELS 182, 205, 206, P206, U206, TP206, TU206, 210 & T210
3. ALL DIMENSIONS ARE IN INCHES.

Figure 8-4. Marker Beacon Antenna Installations - Sheet 1

MARKER BEACON ANTENNA INSTALLATIONS

Figure 8-4. Marker Beacon Antenna Installations - Sheet 2

| FIGURE AND INDEX NO. | PART NUMBER | DESCRIPTION<br>1 2 3 4 5 6 7 | UNITS PER ASSY | USABLE ON CODE |
|---|---|---|---|---|
| -4- | | MARKER BEACON ANTENNA INSTALLATIONS | N/P | |
| | | MARKER BEACON ANTENNA INSTALLATION A | N/P | |
| - 1 | 0770021-1 | ANTENNA MAST ASSEMBLY | 2 | |
| | | ATTACHING PARTS | | |
| - 2 | S1021Z6-8 | SCREW | 8 | |
| - 3 | NAS446-2-3 | NUT | 8 | |
| | | ---*--- | | |
| - 4 | 0411067-1 | INSULATOR | 1 | |
| - 5 | C-33 | TERMINAL | 1 | |
| - 6 | W106A | WIRE-ANTENNA BULK ITEM | A/R | |
| - 7 | 463 | INSULATOR | 2 | |
| - 8 | S1351T2 | SLEEVING-NYLON-----BULK ITEM | A/R | |
| - 9 | MS20365-632C | NUT | 1 | |
| | | MARKER BEACON ANTENNA INSTALLATION B | N/P | |
| | | ALL MODELS EXCEPT 336 & 337 | | |
| | 0770681-1 | ANTENNA ROD ASSEMBLY | 1 | |
| - 10 | 0770681-2 | ANTENNA ROD | 1 | |
| - 11 | 0770681-3 | SUPPORT-PHENOLIC | 1 | |
| | 1270012-7 | SLEEVE | 1 | |
| | | ATTACHING PARTS | | |
| - 12 | AN970-3 | WASHER | 1 | |
| - 13 | MS20365-1032C | NUT | 1 | |
| - 14 | AN970-3 | WASHER | 1 | |
| - 15 | AN936A10 | WASHER | 1 | |
| - 16 | AN520-10R12 | SCREW | 1 | |
| | | ---*--- | | |
| - 17 | MS35489-2S | GROMMET | 1 | |
| - 18 | AN742D3 | CLAMP | 1 | |
| | | ATTACHING PARTS | | |
| - 19 | AN515-8R6 | SCREW | 1 | |
| - 20 | MS20364-832C | NUT | 1 | |
| | | ---*--- | | |
| | | MARKER BEACON ANTENNA INSTALLATION C 336 & 337 ONLY | N/P | |
| - 21 | 24810-1100 | MARKER BEACON ANTENNA ARC | 1 | |
| | | ATTACHING PARTS | | |
| - 22 | AN515-8R6 | SCREW | 8 | |
| | | ---*--- | | |

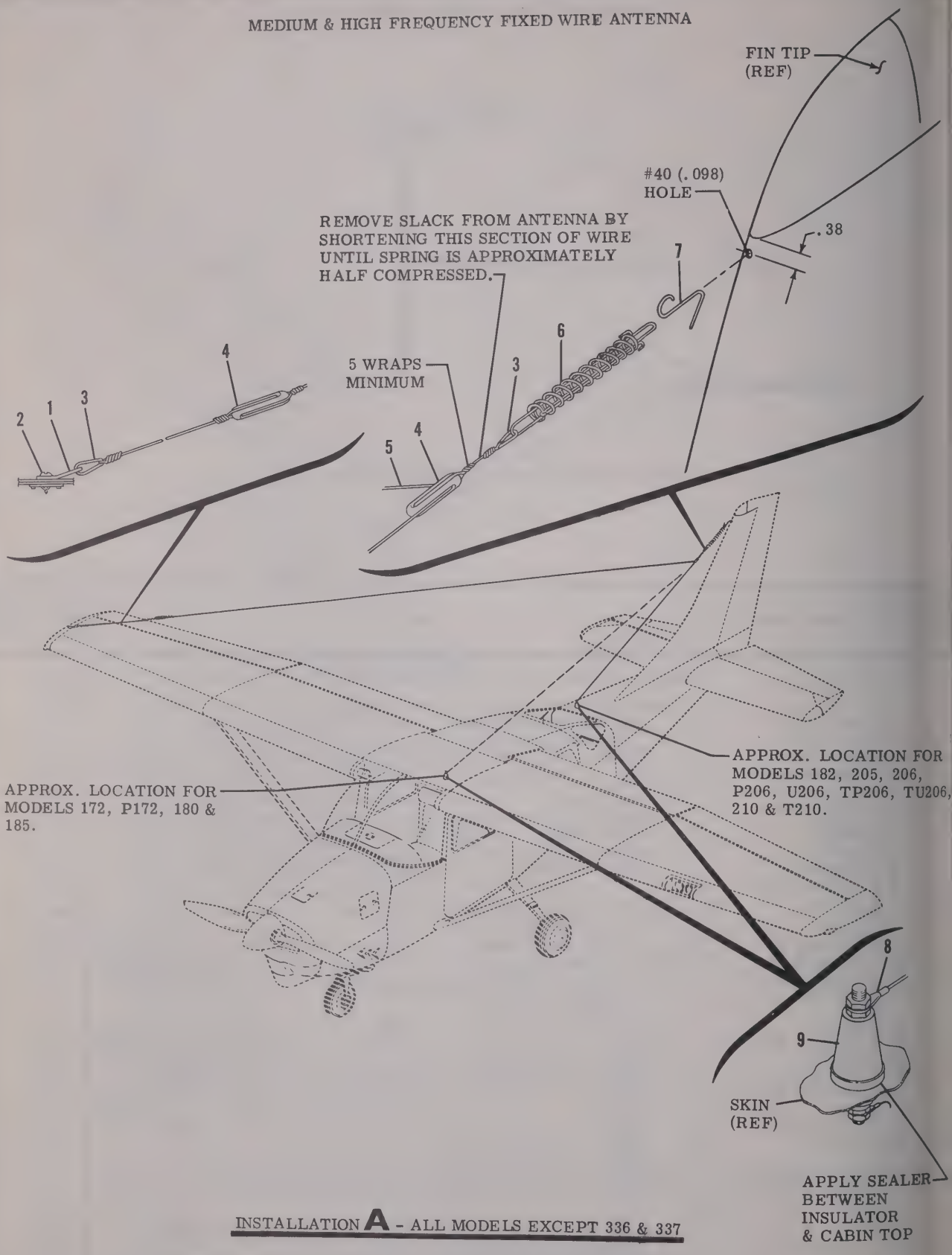


Figure 8-5. Medium & High Frequency Fixed Wire Antenna (Sheet 1 of 2)

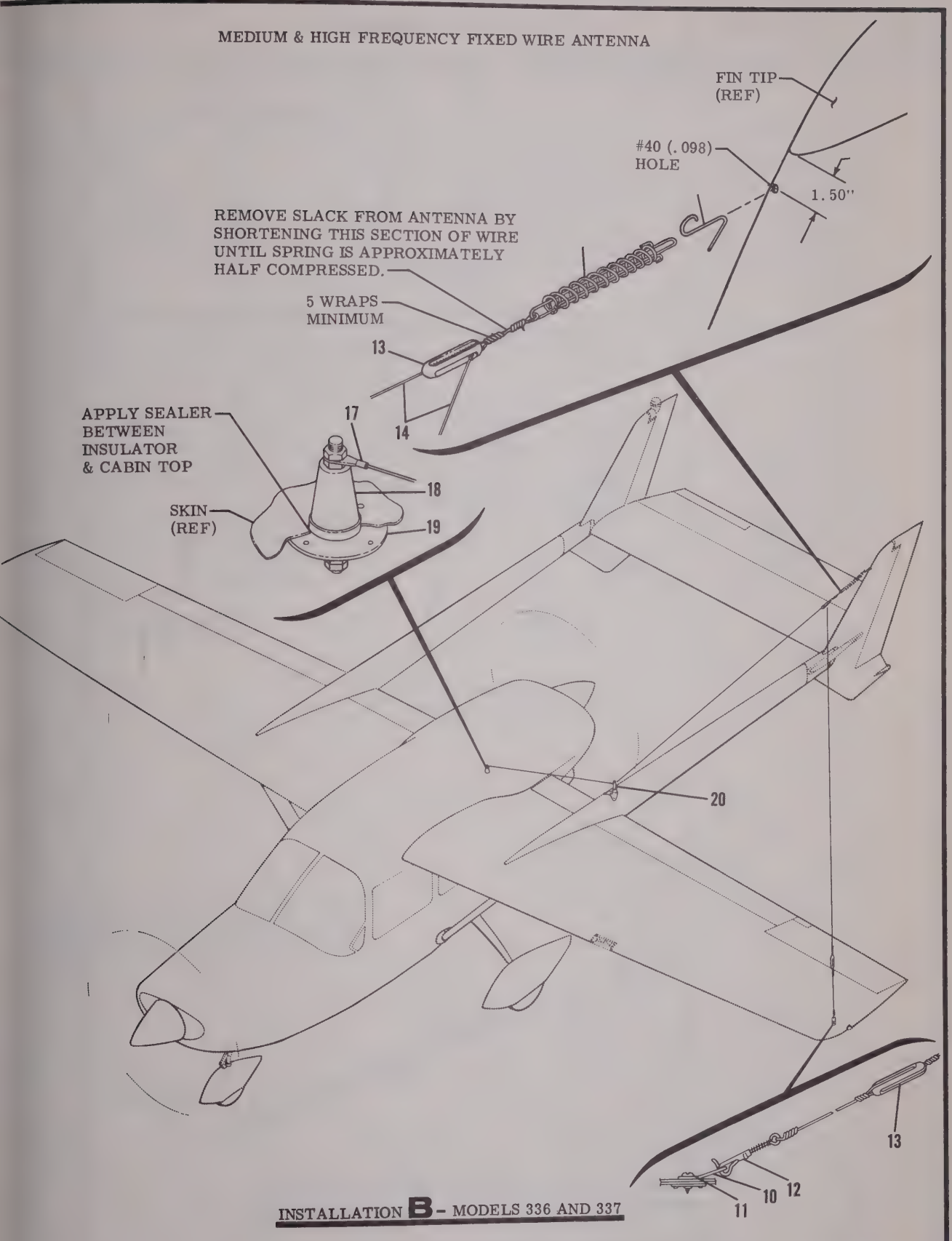


Figure 8-5. Medium & High Frequency Fixed Wire Antenna (Sheet 2 of 2)

| FIGURE AND INDEX NO. | PART NUMBER | DESCRIPTION<br>1 2 3 4 5 6 7 | UNITS PER ASSY | USABLE ON CODE |
|---|---|---|---|---|
| 8-5- | | MF & HF FIXED WIRE ANTENNA INSTALLATIONS---------- | NP | |
| | | MF & HF ANTENNA INSTL. A ALL MODELS EXCEPT 336 & 337-- | NP | |
| - 1 | 0511104-19 | BRACKET---------- | 1 | |
| | | ATTACHING PARTS | | |
| - 2 | S1021Z8-10 | SCREW---------- | 1 | |
| | | ---*--- | | |
| - 3 | AN100-3 | THIMBLE-WIRE CABLE---------- | 2 | |
| - 4 | 463 | INSULATOR---------- | 2 | |
| - 5 | W106A | WIRE-ANTENNA---------- | AR | |
| - 6 | S1282-4 | SPRING---------- | 1 | |
| - 7 | 0411686 | CLIP---------- | 1 | |
| - 8 | S1367-1-10 | TERMINAL---------- | 1 | |
| - 9 | 135-40 | INSULATOR FEED THRU---------- | 1 | |
| | | MF & HF ANTENNA INSTL. B MODELS 336 & 337 ONLY-------- | N/P | |
| - 10 | 0511104-19 | BRACKET---------- | 1 | |
| | | ATTACHING PARTS | | |
| - 11 | S1021Z8-10 | SCREW---------- | 1 | |
| | | ---*--- | | |
| - 12 | 5930 1/2 | HOOK NJ---------- | 2 | |
| - 13 | 463 | INSULATOR---------- | 2 | |
| - 14 | W106A | WIRE - #18/30HS - BULK ITEM---------- | A/R | |
| - 15 | S1282-4 | SPRING---------- | 1 | |
| - 16 | 0411686 | CLIP---------- | 1 | |
| - 17 | S1367-1-10 | TERMINAL---------- | 1 | |
| - 18 | 135-40 | INSULATOR---------- | 1 | |
| | | ATTACHING PARTS | | |
| - 19 | 1470082-4 | DOUBLER---------- | 1 | |
| | | ---*--- | | |
| - 20 | 1470125-1 | STANDOFF ASSEMBLY---------- | 1 | |

ADF (SENSE) ANTENNA INSTALLATION

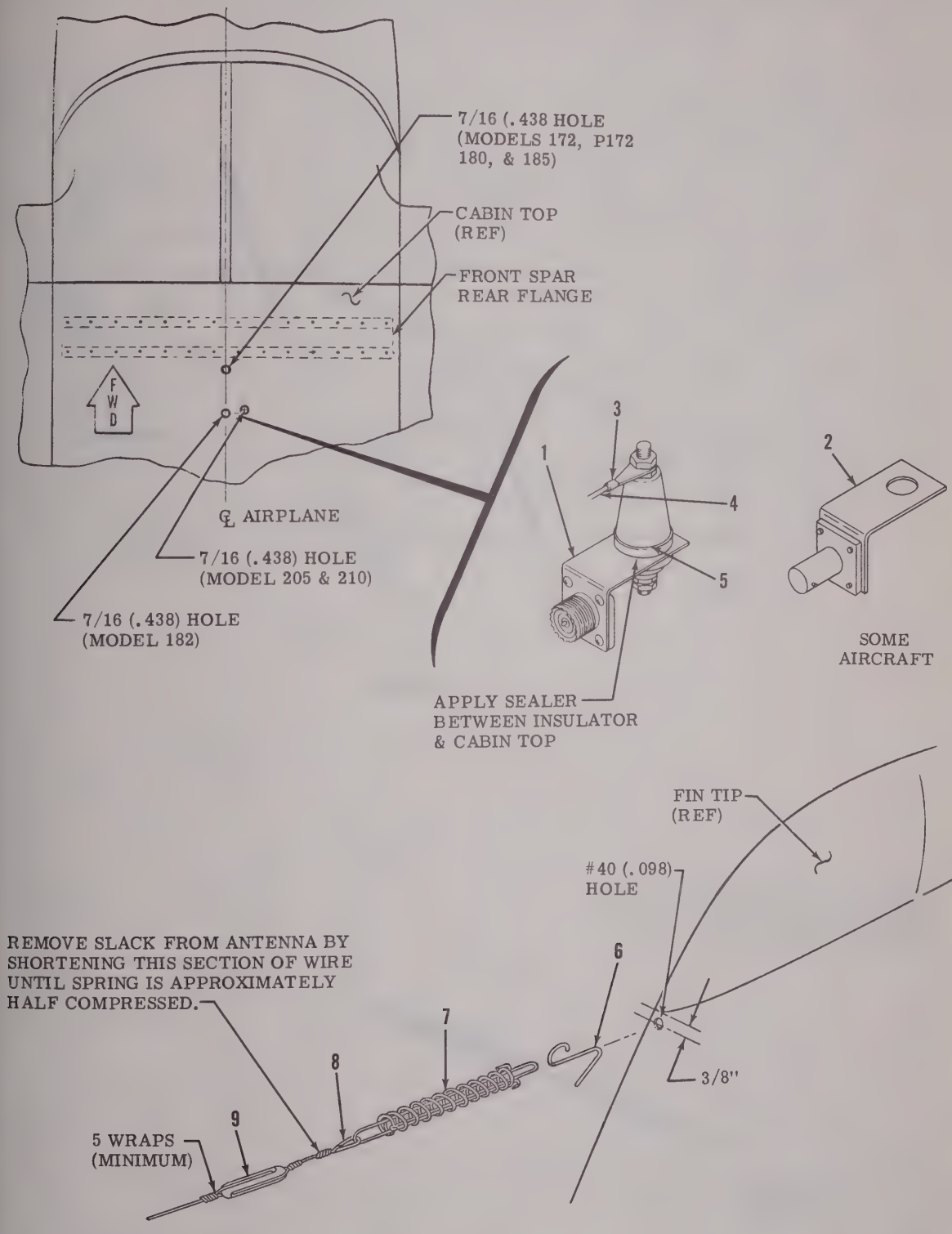


INSTALLATION **A** - ALL MODELS EXCEPT 336 & 337

Figure 8-6. ADF (Sense) Antenna Installation (Sheet 1 of 2)

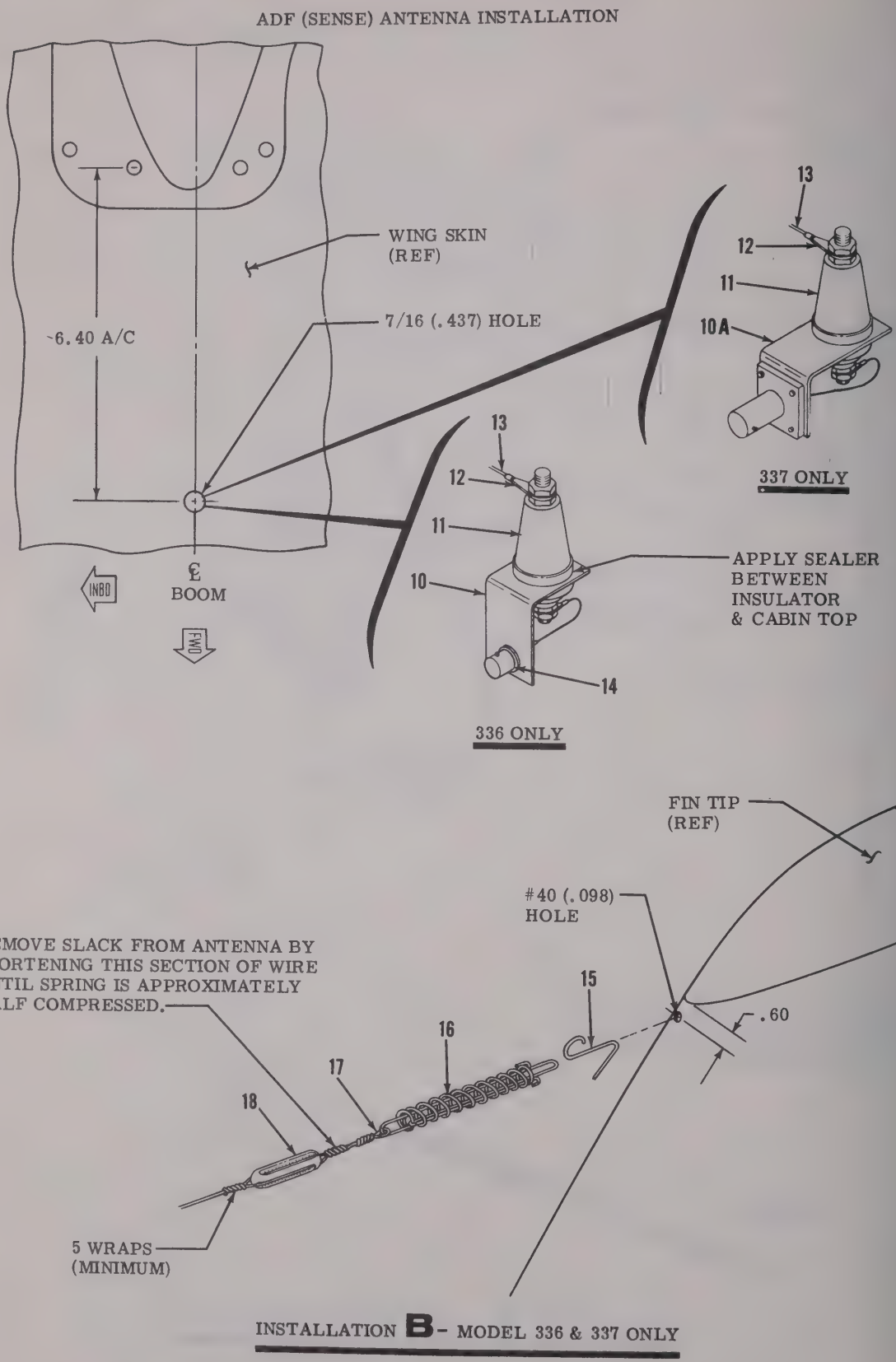


Figure 8-6. ADF (Sense) Antenna Installation (Sheet 2 of 2)

| FIGURE AND INDEX NO. | PART NUMBER | DESCRIPTION 1 2 3 4 5 6 7 | UNITS PER ASSY | USABLE ON CODE |
|---|---|---|---|---|
| 8-6- | | ADF SENSE ANTENNA INSTALLATIONS | NP | |
| | | ADF SENSE ANTENNA INSTALLATION A ALL MODELS EXCEPT 336 AND 337 | NP | |
| - 1 | 1270422-1 | ANGLE-CONNECTOR ASSY USED ON SOME AIRCRAFT | 1 | |
| | 1270422-2 | ANGLE | 1 | |
| | SO-239 | JACK-COAXIAL | 1 | |
| - 2 | 1270444-1 | ANGLE-CONNECTOR ASSY USED ON SOME AIRCRAFT | 1 | |
| | 1270444-2 | ANGLE | 1 | |
| | UG-290/U | RECEPTACLE-COAXIAL | 1 | |
| - 3 | S1367-1-10 | TERMINAL | 1 | |
| - 4 | W106A | WIRE-ADF SENSE ANTENNA 18 FEET REQD BULK ITEM | AR | |
| - 5 | 135-40 | INSULATOR-FEED THRU | 1 | |
| - 6 | 0411686 | CLIP | 1 | |
| - 7 | S1282-4 | SPRING | 1 | |
| - 8 | AN100-3 | THIMBLE - WIRE CABLE | 1 | |
| - 9 | 463 | INSULATOR | 1 | |
| | | ADF SENSE ANTENNA INSTALLATION B 336 & 337 ONLY | NP | |
| - 10 | 1470059-3 | BRACKET 336 ONLY | 1 | |
| -10A | 1270444-1 | ANGLE-CONNECTOR ASSY 337 ONLY | 1 | |
| - 11 | 135-40 | INSULATOR-FEED THRU | 1 | |
| - 12 | S1367-1-8 | TERMINAL | 1 | |
| - 13 | W-106A | WIRE #18/30 HS-----18 FEET REQD BULK ITEM | AR | |
| - 14 | UG-657/U | RECEPTACLE-COAXIAL | 1 | |
| - 15 | 0411686 | CLIP | 1 | |
| - 16 | S1282-4 | SPRING | 1 | |
| - 17 | AN100-3 | THIMBLE - WIRE CABLE | 1 | |
| - 18 | 463 | INSULATOR | 1 | |
| | | NOTE: LENGTH OF ANTENNA ON ALL MODELS IS 10 FT. | | |

# SECTION IX

# AUDIO SYSTEMS

TABLE OF CONTENTS


| Figure | | Page |
|---|---|---|
| 9-1 | Audio Isolation Amplifier & Selector Switch Installations | 9-2 |
| 9-2 | Not Used | --- |
| 9-3 | Speaker Installations | 9-15 |
| 9-4 | Microphone Installations | 9-19 |
| 9-5 | Headset Installation | 9-26 |

AUDIO ISOLATION AMPLIFIER & SELECTOR SWITCH INSTALLATIONS

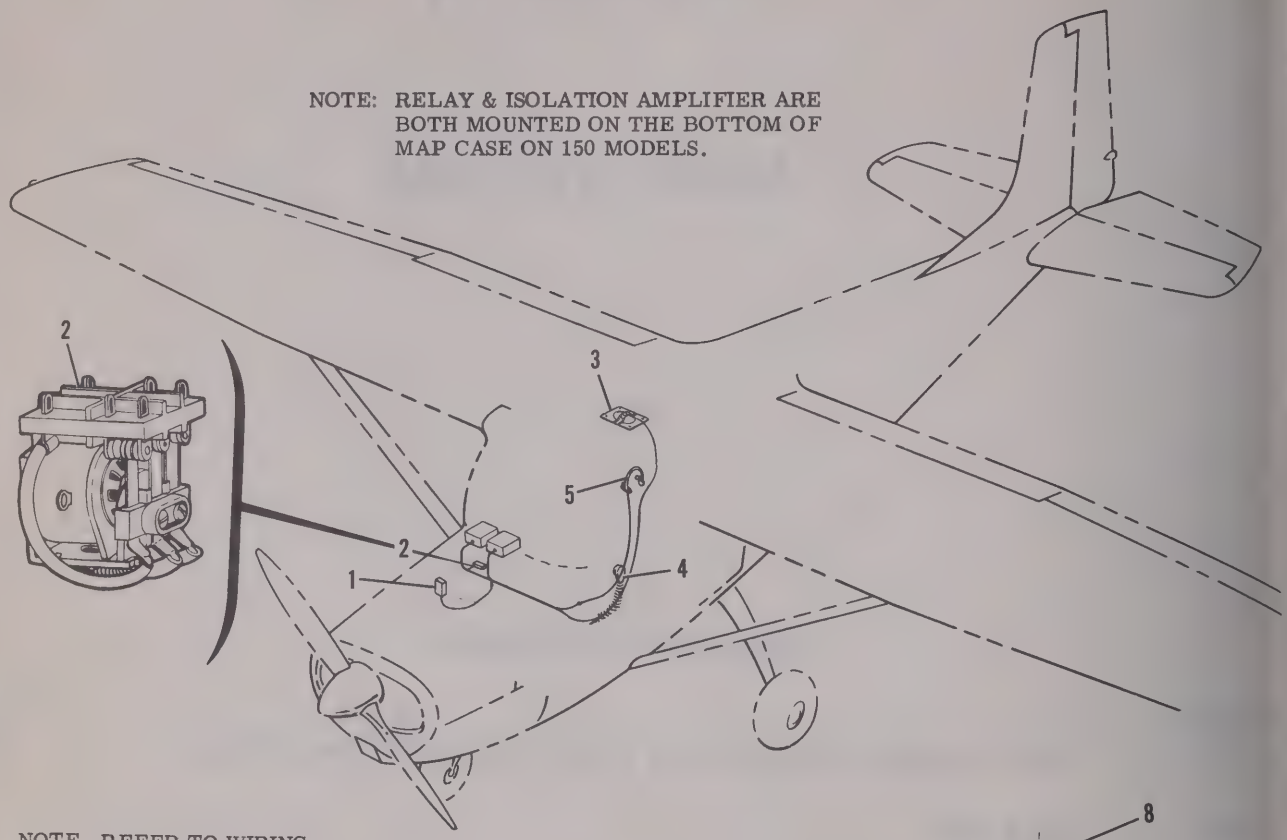


NOTE. REFER TO WIRING DIAGRAMS FOR DETAILS.

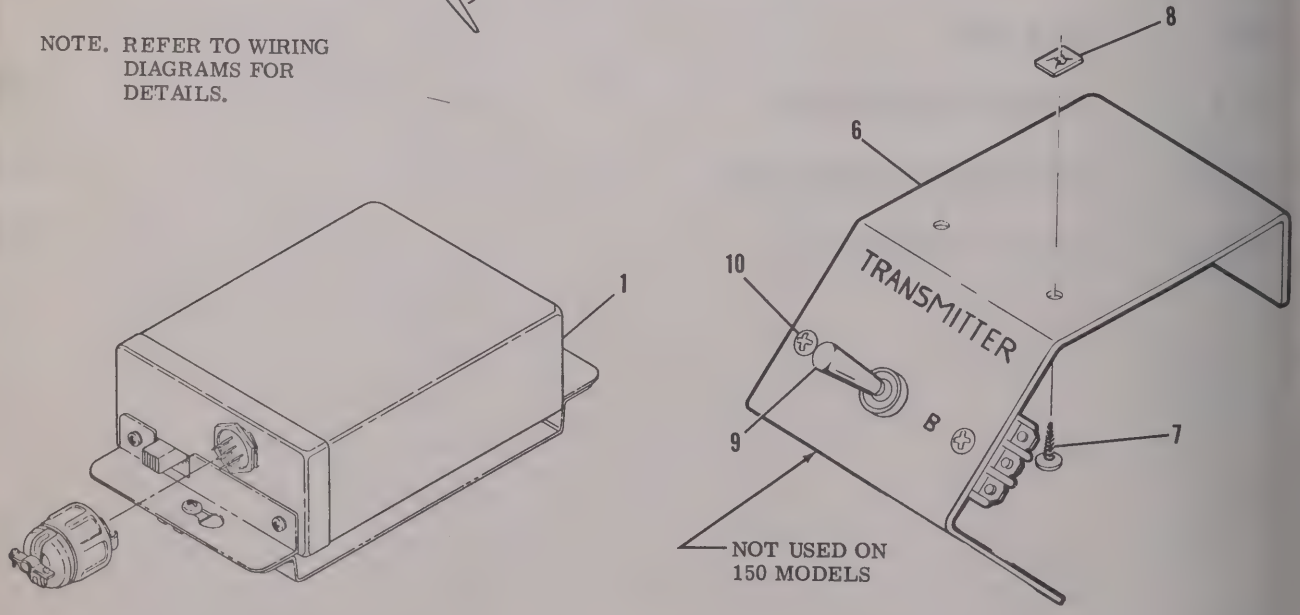


INSTALLATION **A** - 172 & P172 THRU 1963 AND 150 MODELS, THRU 1965

Figure 9-1. Audio Isolation Amplifier & Selector Switch Installations - Sheet 1

AUDIO ISOLATION AMPLIFIER & SELECTOR SWITCH INSTALLATION

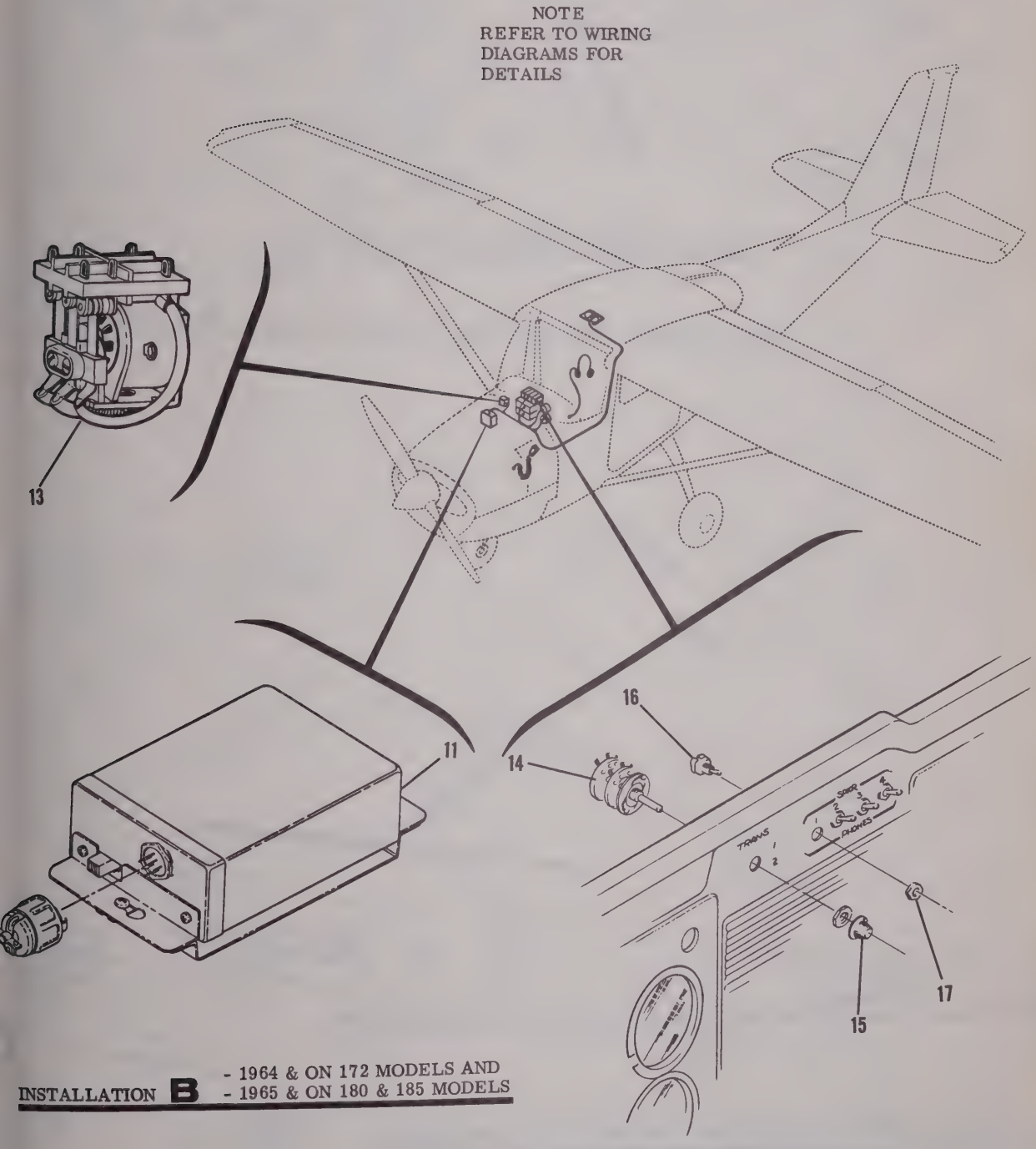


Figure 9-1. Audio Isolation Amplifier & Selector Switch Installations - Sheet 2

AUDIO ISOLATION AMPLIFIER & SELECTOR SWITCH INSTALLATIONS

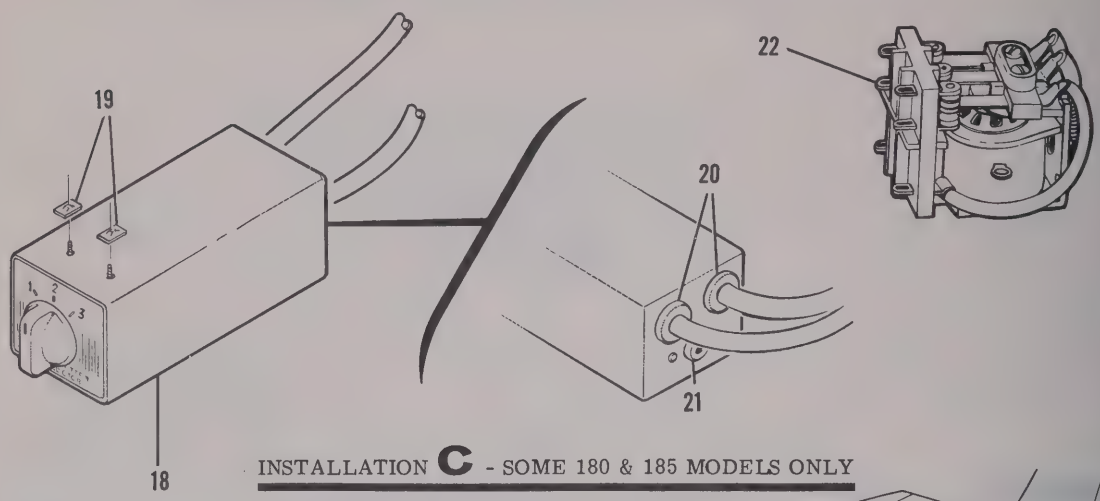


INSTALLATION **C** - SOME 180 & 185 MODELS ONLY

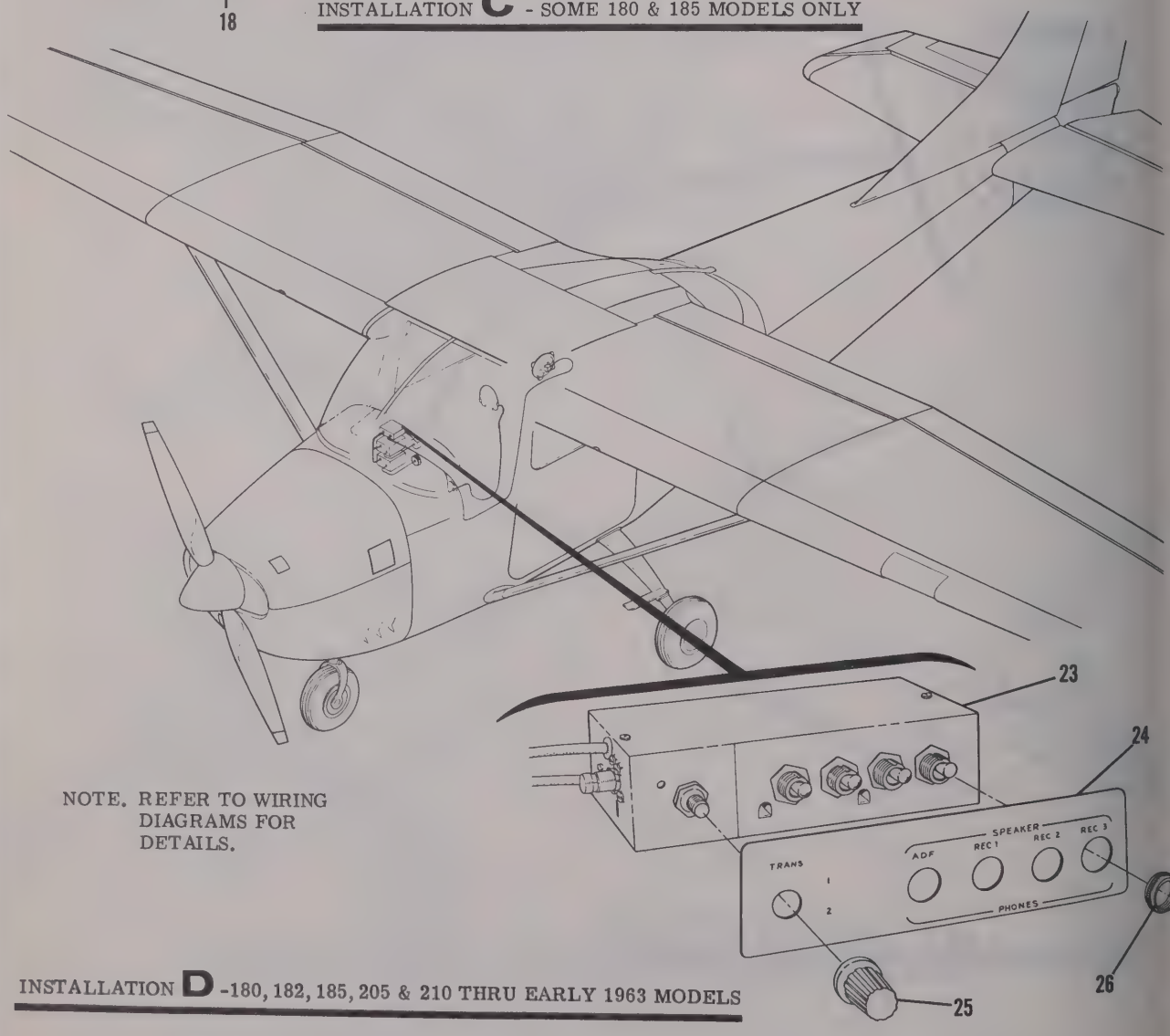


NOTE. REFER TO WIRING DIAGRAMS FOR DETAILS.

INSTALLATION **D** -180, 182, 185, 205 & 210 THRU EARLY 1963 MODELS

Figure 9-1. Audio Isolation Amplifier & Selector Switch Installations - Sheet 3

AUDIO ISOLATION AMPLIFIER & SELECTOR SWITCH INSTALLATION

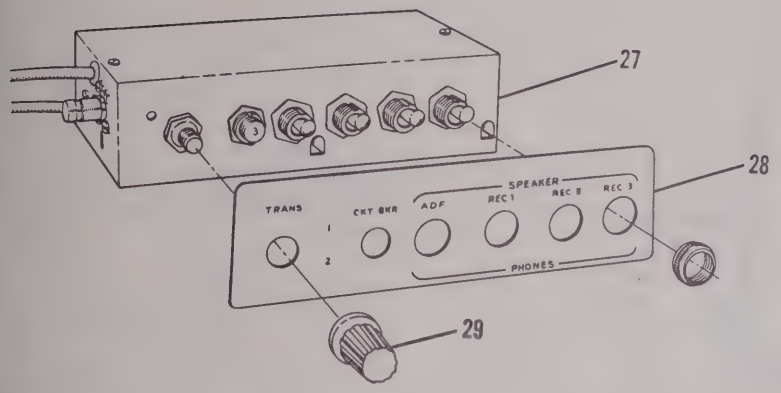


NOTE
REFER TO WIRING DIAGRAMS FOR DETAILS

INSTALLATION **E** - 180, 182, 185, 205, 206 & 210 MODELS - 1963 THRU 1964

NOTE

INSTALLATION "F" IS USED WHEN AUTOPILOT - OMNI SELECTION IS NOT REQUIRED

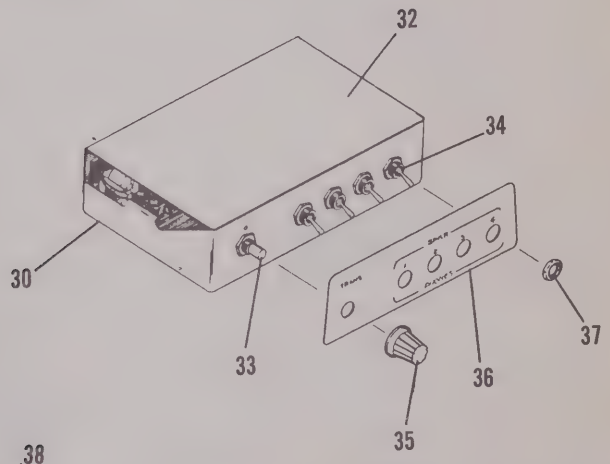


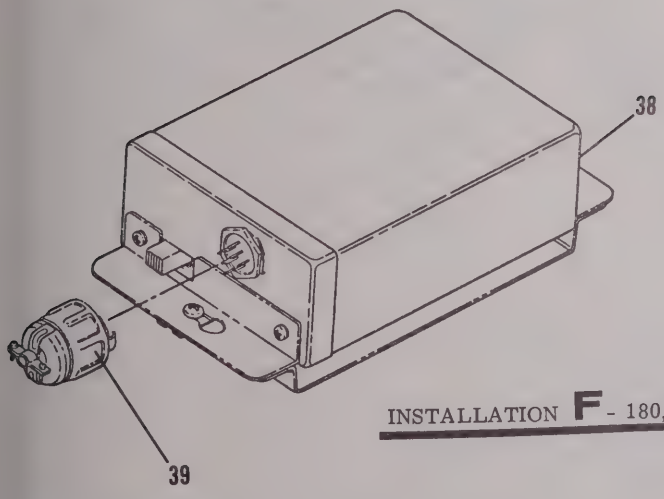


INSTALLATION **F** - 180, 182, 185, 205, 206 & 210 MODELS - 1963 THRU 1964

Figure 9-1. Audio Isolation Amplifier & Selector Switch Installations - Sheet 4

AUDIO ISOLATION AMPLIFIER & SELECTOR SWITCH INSTALLATIONS

NOTE
REFER TO WIRING
DIAGRAMS FOR
DETAILS

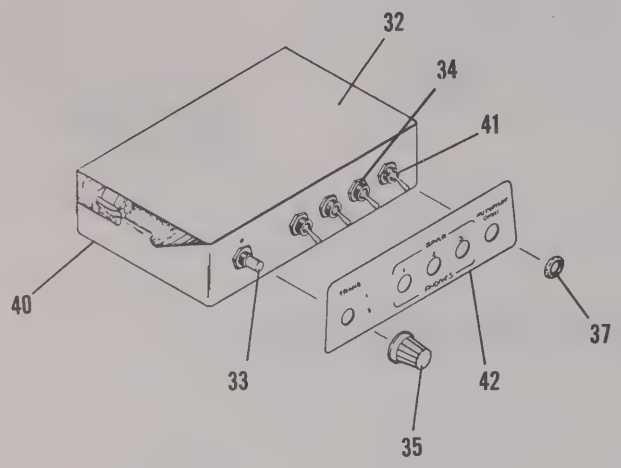


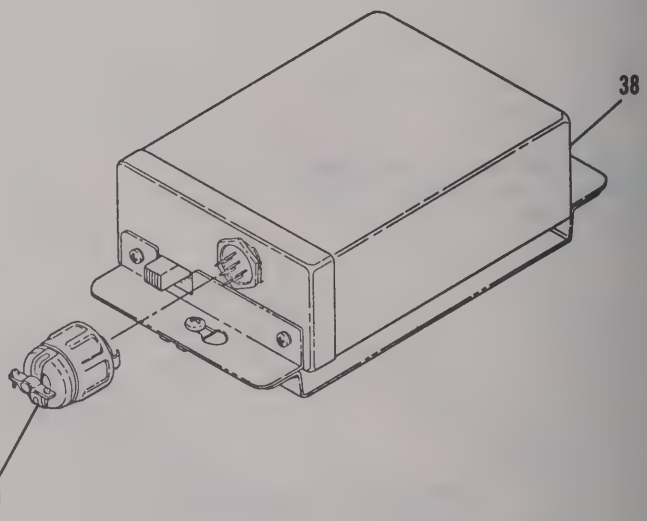


NOTE
INSTALLATION "G" REQUIRED WITH
AUTOPILOT - OMNI SELECTION

INSTALLATION **G** - 180, 182, 185, 205, 206, & 210 MODELS - 1963 THRU 1965

Figure 9-1. Audio Isolation Amplifier & Selector Installations - Sheet 5

AUDIO ISOLATION AMPLIFIER & SELECTOR SWITCH INSTALLATION

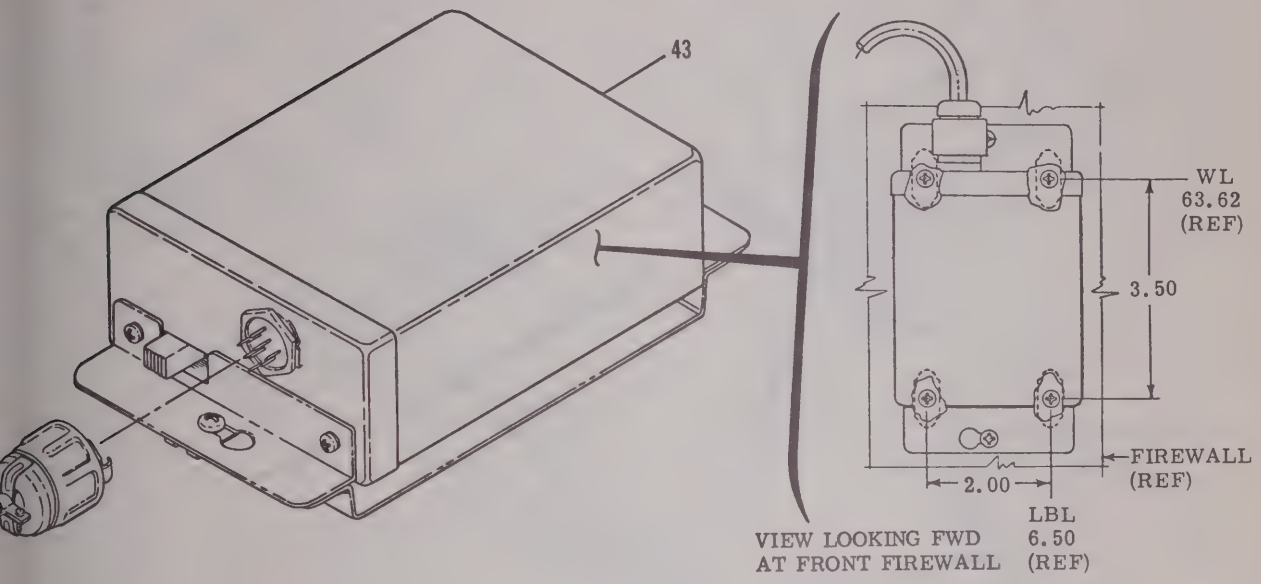


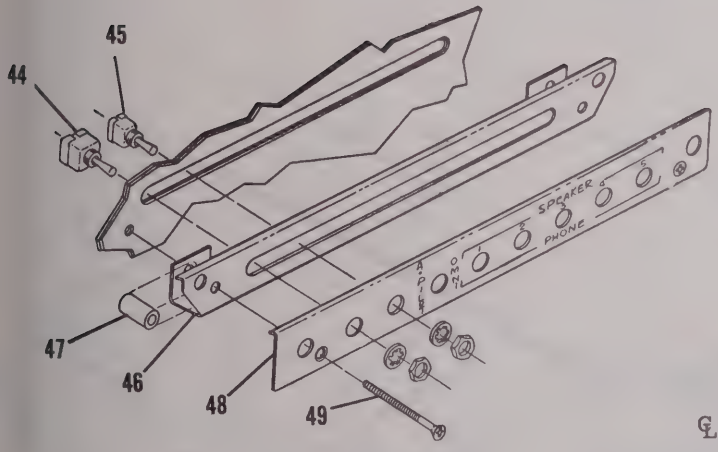


NOTE
REFER TO WIRING
DIAGRAMS FOR
DETAILS

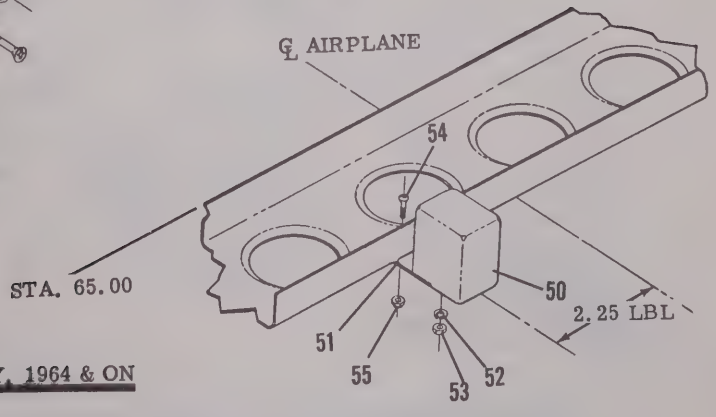


INSTALLATION **H** - 336 & 337 ONLY, 1964 & ON

Figure 9-1. Audio Isolation Amplifier & Selector Switch Installations - Sheet 6

AUDIO ISOLATION AMPLIFIER & SELECTOR SWITCH INSTALLATION

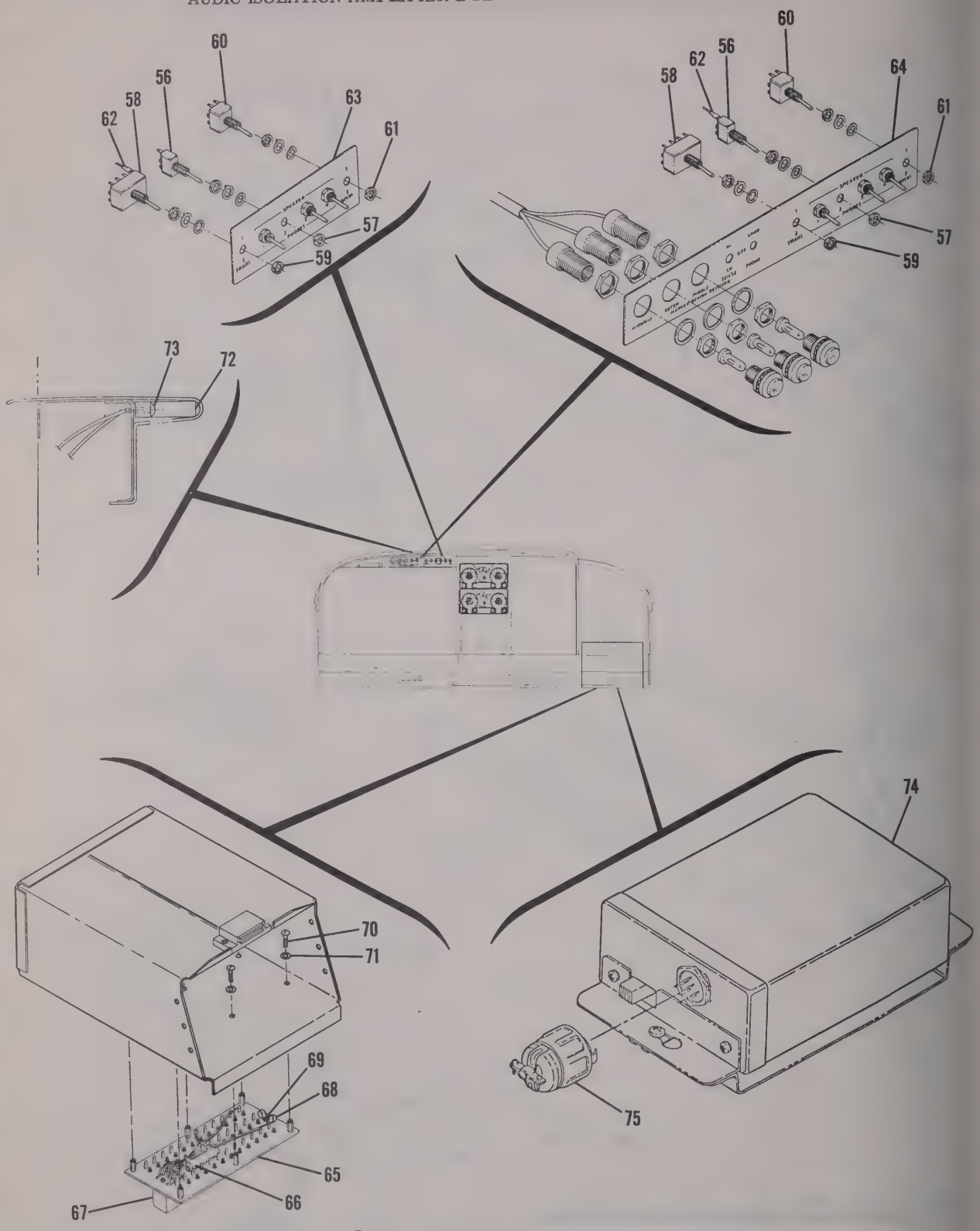


INSTALLATION J - 182, P206, U206 & 210 MODELS - 1965 & ON

Figure 9-1. Audio Isolation Amplifier & Selector Switch Installation - Sheet 7

AUDIO ISOLATION AMPLIFIER & SELECTOR SWITCH INSTALLATION

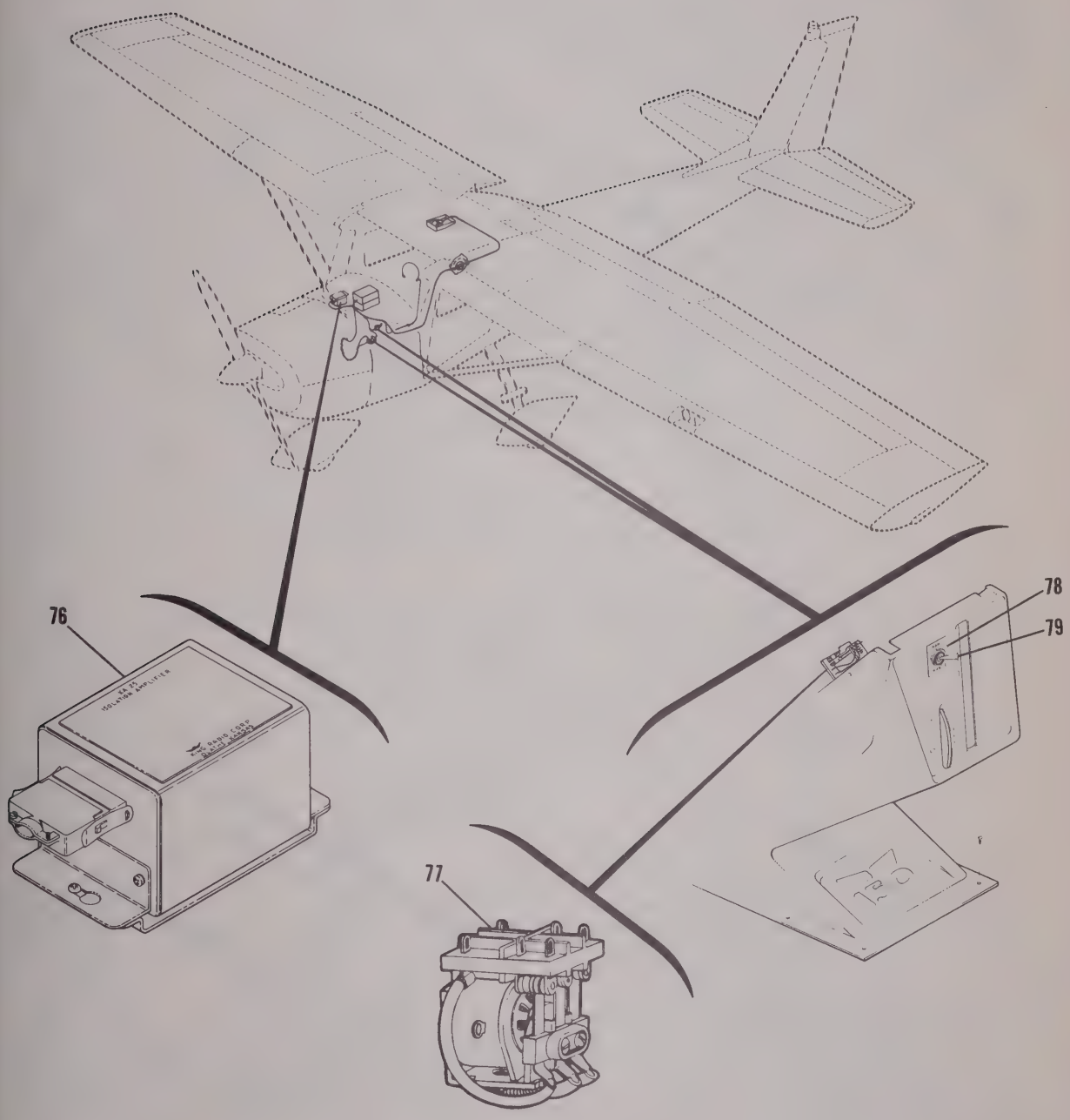


INSTALLATION K - 1966 & ON 150 MODELS

Figure 9-1. Audio Isolation Amplifier & Selector Switch Installations - Sheet 8

AUDIO ISOLATION AMPLIFIER & SELECTOR SWITCH INSTALLATION

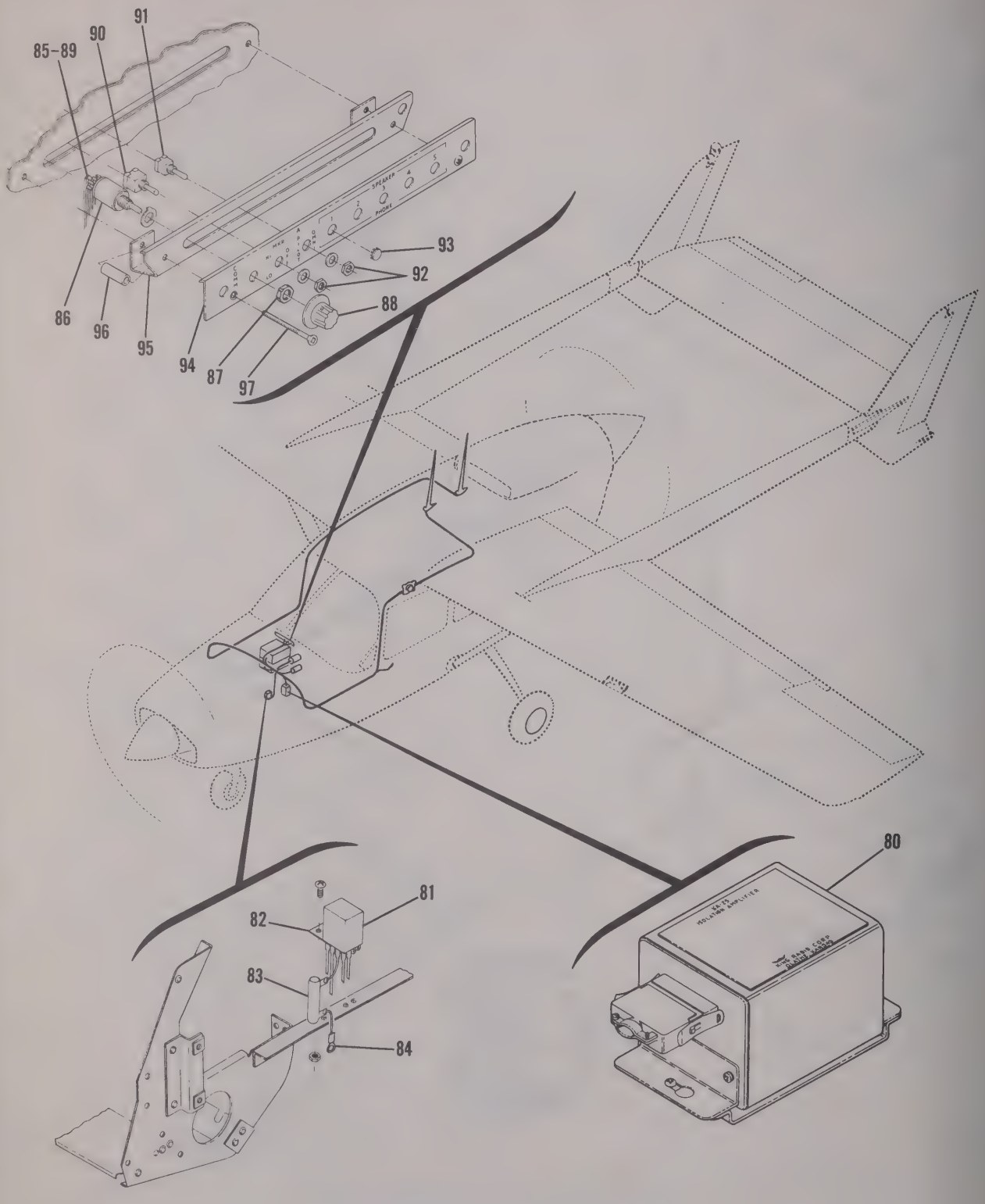


INSTALLATION L - 1966 & ON 337 MODELS

Figure 9-1. Audio Isolation Amplifiter & Selector Switch Installations - Sheet 9

| FIGURE AND INDEX NO. | PART NUMBER | DESCRIPTION<br>1 2 3 4 5 6 7 | UNITS PER ASSY | USABLE ON CODE |
|---|---|---|---|---|
| 9-1- | | AUDIO ISOLATION AMPLIFIER & SELECTOR SWITCH INSTALLATIONS---- | N/P | |
| | | AUDIO ISOLATION AMPLIFIER & TRANSMITTER SELECTOR SWITCH---- | N/P | |
| | | INSTALLATION A 172 & P172 THRU 1963 ONLY AND 1964 & ON 150 MODELS | | |
| - 1 | KA-10 | KING ISOLATION AMPLIFIER---- WHEN EXHAUSTED USE KA-25C | 1 | |
| | | NOT REQUIRED ON RADIOS WITH BUILT IN AMPLIFIER | | |
| | | ATTACHING PARTS | | |
| | S1021Z6-8 | SCREW ---------- | 4 | |
| | NAS446-2-3 | NUT ---------- | 4 | |
| | | ---*--- | | |
| - 2 | 1205-GC12 | RELAY-AUDIO MUTING ---------- | 1 | |
| | | ATTACHING PARTS | | |
| | AN515-6R8 | SCREW ---------- | 1 | |
| | | ---*--- | | |
| | 126-222 | RECEPTACLE USED WITH KA-10 AMPLIFIER ONLY 150 ONLY | 1 | |
| | 1000 OHM 1 WATT | RESISTOR AUDIO DROPPING RESISTOR 172 & --------- | 1 | |
| | | P172 ONLY | | |
| | 5 OHM 5 WATT | RESISTOR RECEIVER OUTPUT LOAD RESISTOR 172 ---- | A/R | |
| | | & P172 ONLY | | |
| | S1090-18 | FUSE HOLDER ASSY 172 & P172 ONLY ---------- | A/R | |
| | S1090-19 | CAP 172 & P172 ONLY ---------- | A/R | |
| | S1091-2 | FUSE-----172 & P172 ONLY---------- | A/R | |
| - 3 | | SPEAKER INSTALLATION SEE FIGURE 9-3 ---------- | REF | |
| - 4 | | MICROPHONE INSTALLATION ----SEE FIGURE 9-4 ---------- | REF | |
| - 5 | | HEADSET INSTALLATION SEE FIGURE 9-5 ---------- | REF | |
| | | DUAL TRANSMITTER SWITCH INSTALLATION 172 & --------- | N/P | |
| | | P172 ONLY | | |
| - 6 | 0570010-2 | BRACKET-SWITCH ---------- | 1 | |
| | | ATTACHING PARTS | | |
| - 7 | S1021Z6-8 | SCREW ---------- | 2 | |
| - 8 | NAS446-3-3 | NUT ---------- | 2 | |
| | | ---*--- | | |
| - 9 | AN3226-3 | SWITCH ---------- | 1 | |
| | | ATTACHING PARTS | | |
| - 10 | AN515-6R8 | SCREW ---------- | 2 | |
| | | ---*--- | | |
| | | AUDIO ISOLATION AMPLIFIER & TRANSMITTER SELECTOR --------- | N/P | |
| | | SWITCH-INSTALLATION B 1964 & ON 172 MODELS AND 1965 | | |
| | | & ON 180 & 185 MODELS | | |
| - 11 | KA-10 | KING ISOLATION AMPLIFIER---- WHEN EXHAUSTED USE KA-25C | 1 | |
| | | NOT REQUIRED ON RADIOS WITH BUILT IN AMPLIFIER | | |
| | | ATTACHING PARTS | | |
| | S1021Z6-8 | SCREW ---------- | 4 | |
| | NAS446-2-3 | NUT ---------- | 4 | |
| | | ---*--- | | |
| - 12 | S1360-5 | CIRCUIT BREAKER ---------- | 1 | |
| - 13 | 1205-GC12 | RELAY-AUDIO MUTING ---------- | 1 | |
| | | ATTACHING PARTS | | |
| | AN515-6R8 | SCREW ---------- | 1 | |
| | | ---*--- | | |
| | 5 OHM 5 WATT | RESISTOR RECEIVER OUTPUT LOAD RESISTOR ---------- | A/R | |
| - 14 | PA-2021 | SWITCH TRANSMITTER SELECTOR ---------- | 1 | |
| - 15 | S1163-1 | KNOB-----TRANSMITTER SELECTOR SWITCH ---------- | 1 | |
| - 16 | S382-3 | SWITCH SPEAKER-PHONE---------- | A/R | |
| - 17 | S1216-2 | NUT SPEAKER-PHONE SWITCH-----THRU 1964 ONLY --------- | A/R | |
| | S1216-4 | NUT SPEAKER-PHONE SWITCH-----1964 & ON ---------- | A/R | |
| | | DUAL TRANSMITTER SWITCH & RELAY-INSTALLTION C-----SOME ---- | N/P | |
| | | EARLY 180 & 185 MODELS ONLY | | |
| - 18 | 0770037-2 | SWITCH-TRANSMITTER SELECTOR ---------- | 1 | |
| | | ATTACHING PARTS | | |
| - 19 | NAS446-2-3 | NUT ---------- | 2 | |
| | S1021Z6-8 | SCREW ---------- | 2 | |
| | | ---*--- | | |
| - 20 | MS35489-11 | GROMMET---------- | 2 | |
| - 21 | 81F | CONNECTOR ---------- | 1 | |
| - 22 | 1205-GC12 | RELAY-AUDIO MUTING ---------- | 1 | |

CONTINUED ON NEXT PAGE

| FIGURE AND INDEX NO. | PART NUMBER | DESCRIPTION<br>1 2 3 4 5 6 7 | UNITS PER ASSY | USABLE ON CODE |
|---|---|---|---|---|
| 9-1- | | TRANSMITTER SELECTOR & AUDIO ISOLATION AMPLIFIER | N/P | |
| | | INSTALLATION D 180, 182, 185, 205 & 210 ONLY | | |
| | | F-503A TRANSMITTER SELECTOR & AUDIO ISOLATION AMPLIFIER INSTALLATION | N/P | |
| - 23 | 0770640-2 | AMPLIFIER UNIT-NO LONGER AVAILABLE, REPLACE WITH INSTALLATION F | N/P | |
| | 0770631-3 | PAD-BOND TO LOWER SURFACE OF COVER ASSY INSPECTION OPENING | 2 | |
| - 24 | 0770637-1 | PLACARD ASSY | 1 | |
| - 25 | S1163-1 | KNOB | 1 | |
| - 26 | S1216-2 | NUT | 4 | |
| | 320733 | TERMINAL | 19 | |
| | UG-88C/U | PLUG-COAXIAL | A/R | |
| | 13B | PLUG-MOTOROLA TYPE | A/R | |
| | 13A | PLUG-RCA PHONO TYPE | A/R | |
| | S1232-15 | CIRCUIT BREAKER | 1 | |
| | | F-503B TRANSMITTER SELECTOR & AUDIO ISOLATION AMPLIFIER | N/P | |
| | | INSTALLATION E 180, 182, 185, 205 & 210 ONLY | | |
| - 27 | 0770640-3 | AMPLIFIER UNIT- NO LONGER AVAILABLE, REPLACE WITH INSTALLATION F | N/P | |
| | 0770631-3 | PAD-BOND TO LOWER SURFACE OF COVER ASSY | 1 | |
| - 28 | 0770637-10 | PLACARD ASSY | 1 | |
| - 29 | S1163-1 | KNOB | 1 | |
| | 320733 | TERMINAL | 19 | |
| | UG-88C/U | PLUG-COAXIAL | A/R | |
| | 13B | PLUG-MOTOROLA TYPE | A/R | |
| | 13A | PLUG-RCA PHONO TYPE | A/R | |
| | S1232-5 | CIRCUIT BREAKER | 1 | |
| | | TRANSMITTER SELECTOR SWITCH & AUDIO ISOLATION AMPLIFIER | N/P | |
| | | WITHOUT AUTOPILOT-INSTALLATION F 1963 THRU 1964 | | |
| | | MODELS ONLY - 180, 182, 185, 205, 206 & 210 | | |
| - 30 | 1270616-2 | SWITCH ASSEMBLY-TRANSMITTER SELECTOR | 1 | |
| - 31 | 1270617-1 | MOUNTING ENCLOSURE | 1 | |
| - 32 | 1270618-4 | COVER PLACARD | 1 | |
| | | ATTACHING PARTS | | |
| | S1021A4-6 | SCREW | 3 | |
| | | ---*--- | | |
| - 33 | PA-1018 | SWITCH-ROTARY TRANSMITTER SELECTOR | 1 | |
| - 34 | 8816K9 | SWITCH-ALTERNATE SWITCH IS AN3021-3 SPEAKER-PHONE | 4 | |
| | 1205-GC12 | RELAY - AUDIO MUTING 180 & 185 ONLY | 1 | |
| | 1205-48-3C-AG-12VDC | RELAY - AUDIO MUTING 182, 205, 206 & 210 ONLY | 1 | |
| | | ATTACHING PARTS | | |
| | AN515-6R6 | SCREW | 1 | |
| | | ---*--- | | |
| | 5 OHM 5 WATT | RESISTOR-AXIAL LEAD | 1 | |
| | S1155-6 | CLAMP | 1 | |
| | | ATTACHING PARTS | | |
| | S1021Z8-8 | SCREW | 1 | |
| | NAS395-14-3 | NUT | 1 | |
| | | ---*--- | | |
| | S1155-8 | CLAMP | 1 | |
| | | ATTACHING PARTS | | |
| | S1021Z8-8 | SCREW | 1 | |
| | NAS395-14-3 | NUT | 1 | |
| | | ---*--- | | |
| | 601-2104-12 | TERMINAL BLOCK | 1 | |
| | | ATTACHING PARTS | | |
| | AN515-8R10 | SCREW | 4 | |
| | MS20365-832C | NUT | 4 | |
| | | ---*--- | | |

CONTINUED ON NEXT PAGE

| FIGURE AND INDEX NO. | PART NUMBER | DESCRIPTION 1 2 3 4 5 6 7 | UNITS PER ASSY | USABLE ON CODE |
|---|---|---|---|---|
| 9-1- | S1155-8 | CLAMP | 1 | |
| | | ATTACHING PARTS | | |
| | S1021Z8-8 | SCREW | 1 | |
| | NAS395-14-3 | NUT | 1 | |
| | | ---*--- | | |
| | 601-2104-12 | TERMINAL BLOCK | 1 | |
| | | ATTACHING PARTS | | |
| | AN515-8R-10 | SCREW | 4 | |
| | MS20365-832C | NUT | 4 | |
| | | ---*--- | | |
| - 35 | S1163-1 | KNOB | 1 | |
| - 36 | 0770687-1 | PLACARD ASSY | 1 | |
| | | ATTACHING PARTS | | |
| - 37 | S1216-2 | NUT | 4 | |
| | | ---*--- | | |
| - 38 | KA-10 | KING ISOLATION AMPLIFIER---- NOT REQUIRED ON RADIOS WITH BUILT-IN AMPLIFIER | 1 | |
| | | ATTACHING PARTS | | |
| | S1021Z6-6 | SCREW | 4 | |
| | NAS446-2-3 | NUT | 4 | |
| | | ---*--- | | |
| - 39 | 126-222 | CONNECTOR-SUPPLIED AS PART OF KA-10 AMPLIFIER | A/R | |
| | S1360-5 | CIRCUIT BREAKER | 1 | |
| | S1456-100 | NUMERAL SET | 1 | |
| | | TRANSMITTER SELECTOR SWITCH & AUDIO ISOLATION | N/P | |
| | | AMPLIFIER INSTALLATION G WITH AUTOPILOT-OMNI | | |
| | | SELECTOR SWITCH IDENTICAL TO INSTALLATION F EXCEPT | | |
| | | ITEM 40 REPLACES ITEM 30 AND ITEM 41 REPLACES | | |
| | | ITEM 34 IN THE NUMBER 4 SWITCH POSITION AND | | |
| | | ITEM 42 REPLACES ITEM 36. 1963 THRU 1964 MODELS | | |
| | | 180, 182, 185, 205, 206 & 210 ONLY | | |
| - 40 | 0770693-1 | SWITCH ASSEMBLY-TRANSMITTER, AUDIO & AUTOPILOT- | 1 | |
| | | REPLACES ITEM 30 WHEN AUTOPILOT IS INSTALLED. | | |
| - 41 | 8825K6 | SWITCH-REPLACES ITEM 34 WHEN AUTOPILOT IS INSTALLED- | 1 | |
| | | REPLACES THE RIGHT HAND SWITCH ONLY | | |
| - 42 | 0770687-4 | PLACARD ASSY | 1 | |
| | | TRANSMITTER SELECTOR SWITCHES AND AUDIO ISOLATION | N/P | |
| | | AMPLIFIER INSTALLATION H 336 & 337 THRU 1965 ONLY | | |
| - 43 | KA-11 | KING ISOLATION AMPLIFIER---- WHEN EXHAUSTED USE | 1 | |
| | | KA-25C KG | | |
| | | ATTACHING PARTS | | |
| | AN515-8R8 | SCREW | 4 | |
| | NAS686A08K | NUTPLATE | 4 | |
| | | ---*--- | | |
| | 126-222 | CONNECTOR-SUPPLIED AS PART OF KA-11 AMPLIFIER | N/P | |
| - 44 | 8867K4 | MICROPHONE SELECTOR SWITCH | 1 | |
| - 45 | 8866K1 | MKR BCN, A-PILOT,OMNI,SPKR & PHONE SWITCHES | 7 | |
| | 1470201-15 | PLATE ASSY | 1 | |
| | 1470201-4 | BRACKET ASSY | 1 | |
| - 46 | 1470201-5 | BRACKET | 1 | |
| - 47 | NAS43DD1-60 | SPACER | 2 | |
| - 48 | 1470201-18 | PLATE ASSY | 1 | |
| | | ATTACHING PARTS | | |
| - 49 | AN507-632R24 | SCREW | 2 | |
| | | ---*--- | | |
| | S1456-100 | NUMERAL SET | 1 | |
| | S1360-2 | CIRCUIT BREAKER | 1 | |
| | | RELAY INSTALLATION | N/P | |
| - 50 | KHP17D11 | RELAY-AUDIO MUTING | 1 | |
| | | ATTACHING PARTS | | |
| - 51 | 1470085-2 | BRACKET | 1 | |
| - 52 | AN936A4 | LOCKWASHER | 1 | |
| - 53 | AN340-3 | NUT | 1 | |
| - 54 | AN515-6R6 | SCREW | 2 | |
| - 55 | MS20365-632C | NUT | 2 | |
| | SS-48151 | PLUG BUTTON | A/R | |
| | | INSTALLATION I INTENTIONALLY NOT USED | | |

CONTINUED ON NEXT PAGE

| FIGURE AND INDEX NO. | PART NUMBER | DESCRIPTION<br>1 2 3 4 5 6 7 | UNITS PER ASSY | USABLE ON CODE |
|---|---|---|---|---|
| 9-1- | | AUDIO OMNI & TRANSMITTER SELECTOR SWITCHES & TERMINAL ---- | N/P | |
| | | BOARD INSTALLATION J 182, P206, U206, TP206, TU206, | | |
| | | 210 & T210 1965 & ON | | |
| - 56 | MST-105D | SWITCH ---------- | A/R | |
| | | ATTACHING PARTS | | |
| - 57 | S1216-3 | NUT - REPLACES OUTER NUT - SILVER-----AELM ---------- | 1 | |
| | | ---*--- | | |
| - 58 | MST-405N | SWITCH ---------- | 1 | |
| | | ATTACHING PARTS | | |
| - 59 | S1216-3 | NUT - REPLACES OUTER NUT - SILVER-----AELM ---------- | 1 | |
| | | ---*--- | | |
| - 60 | MST-205N | SWITCH ---------- | A/R | |
| | | ATTACHING PARTS | | |
| - 61 | S1216-3 | NUT - REPLACES OUTER NUT - SILVER-----AELM ---------- | 1 | |
| | | ---*--- | | |
| - 62 | FIT-105-3/32X1/2 | SHRINK TUBING BULK ITEM ALW ---------- | A/R | |
| - 63 | 0770717-1 | PLACARD ASSY, RADIO-----DOES NOT PROVIDE FOR MARKER ---- | A/R | |
| | | BEACON LIGHTS INSTALLATION | | |
| - 64 | 0770717-2 | PLACARD ASSY, RADIO SWITCHES & MARKER BEACON USED---- | A/R | |
| | | ONLY WHEN MARKER BEACON LIGHTS ARE INSTALLED | | |
| | SS-48151 | PLUG BUTTON - INSTALLED IN UNUSED HOLES OF SWITCHING ---- | A/R | |
| | | SYSTEM UC | | |
| - 65 | 0770714-1 | TERMINAL BOARD ASSY---------- | 1 | |
| - 66 | FRL10-5 OHM | RESISTOR - 5 OHM 10 WATT AXIAL LEAD TRTA --------- | 1 | |
| | | ALTERNATE PART IS NO. 1708, 5 OHM OM | | |
| - 67 | KHP17D11-12V | RELAY PBR ---------- | 1 | |
| | | ATTACHING PARTS | | |
| | AN936A4 | WASHER ---------- | 1 | |
| | AN340-3 | NUT ---------- | 1 | |
| | | ---*--- | | |
| - 68 | S1155-4 | CLAMP ---------- | 2 | |
| | | ATTACHING PARTS | | |
| - 69 | AN515-8R10 | SCREW ---------- | 1 | |
| | MS20365-832C | NUT ---------- | 1 | |
| | | ---*--- | | |
| | | ATTACHING PARTS | | |
| - 70 | AN936A8 | WASHER ---------- | 6 | |
| - 71 | AN515-8R6 | SCREW ---------- | 6 | |
| | | ---*--- | | |
| - 72 | 0700737-1 | LIGHT ASSY-RADIO SWITCH PANEL ---------- | 1 | |
| | | ATTACHING PARTS | | |
| - 73 | S1021Z6-8 | SCREW ---------- | 2 | |
| | | ---*--- | | |
| - 74 | KA-10 | KING ISOLATION AMPLIFIER---- NOT REQD ON RADIOS WITH ---- | 1 | |
| | | BUILT-IN AMPLIFIER WHEN EXHAUSTED USE KA-25C | | |
| | | ATTACHING PARTS | | |
| | S1021Z6-6 | SCREW ---------- | 4 | |
| | NAS446-2-3 | NUT ---------- | 4 | |
| | | ---*--- | | |
| - 75 | 126-222 | CONNECTOR-SUPPLIED AS PART OF KA-10 AMPLIFIER --------- | 1 | |
| | | AUDIO ISOLATION AMPLIFIER & TRANSMITTER SELECTOR SWITCH---- | N/P | |
| | | INSTALLATION K 1966 & ON 150 ONLY | | |
| - 76 | KA-25 | KING ISOLATION AMPLIFIER---- REPLACES KA-10 WHEN--------- | 1 | |
| | | EXHAUSTED NOT REQD ON RADIOS WITH BUILT IN | | |
| | | AMPLIFIERS KG | | |
| | | ATTACHING PARTS | | |
| | S1021Z6-10 | SCREW ---------- | 4 | |
| | NAS43DD1-16 | SPACER ---------- | 4 | |
| | NAS446-2-3 | NUT ---------- | 4 | |
| | | ---*--- | | |
| - 77 | 1205-GC12 | RELAY - AUDIO MUTING GN ---------- | 1 | |
| | | ATTACHING PARTS | | |
| | AN515-6R8 | SCREW ---------- | 1 | |
| | | ---*--- | | |
| - 78 | 0470014-1 | PLACARD ---------- | 1 | |
| - 79 | 1L254-73 | SWITCH ---------- | 1 | |

CONTINUED ON NEXT PAGE

| FIGURE AND INDEX NO. | PART NUMBER | DESCRIPTION 1 2 3 4 5 6 7 | UNITS PER ASSY | USABLE ON CODE |
|---|---|---|---|---|
| 9-1- | | TRANSMITTER SELECTOR SWITCHES AND AUDIO ISOLATION | N/P | |
| | | AMPLIFIER INSTALLATION L 1966 & ON 337 ONLY | | |
| - 80 | KA-25C | KING ISOLATION AMPLIFIER---- KG | 1 | |
| | | ATTACHING PARTS | | |
| | AN515-8R8 | SCREW | 4 | |
| | NAS686A08K | NUT | 4 | |
| | | ---*--- | | |
| | 1570001-240 | CABLE ASSY - MUTING RELAY REQD WHEN MORE THAN ONE---- | A/R | |
| | | RECEIVER IS INSTALLED | | |
| - 81 | KHP17D11 | RELAY | 1 | |
| - 82 | 1470085-2 | BRACKET | 1 | |
| - 83 | 5 OHM 10 W | RESISTOR | 1 | |
| - 84 | S1367-1-8 | TERMINAL | 1 | |
| | AN936A4 | WASHER | 1 | |
| | AN340-3 | NUT | 1 | |
| | | ATTACHING PARTS | | |
| | AN515-6R6 | SCREW | 2 | |
| | MS20365-632C | NUT | 2 | |
| | | ---*--- | | |
| | | SWITCH INSTALLATION - MIKE SELECT-----USED WITH CESSNA | N/P | |
| | | CRAFTED RADIOS | | |
| - 85 | 1570001-245 | CABLE ASSY - MIKE SEL SW | A/R | |
| - 86 | 1570001-246 | SWITCH | 1 | |
| - 87 | S1216-3 | NUT | 1 | |
| - 88 | 1910-E | KNOB DHM | 1 | |
| | 5 OHM 10 W | RESISTOR OM | 1 | |
| | S1456-100 | NUMERALS | 1 | |
| | | SWITCH INSTALLATION - MIKE SELECT-----USED WITH RADIOS | N/P | |
| | | THAT ARE NOT CESSNA CRAFTED | | |
| - 89 | 1570001-247 | CABLE ASSY - MIKE SEL SW | A/R | |
| | 1570001-246 | SWITCH | 1 | |
| | S1216-3 | NUT | 1 | |
| | 1910-E | KNOB DHM | 1 | |
| | S1456-100 | NUMERALS | 1 | |
| - 90 | MST205E | SWITCH | 1 | |
| - 91 | MST105E | SWITCH | A/R | |
| - 92 | S1216-3 | NUT | A/R | |
| - 93 | SS-48151 | PLUG BUTTON | A/R | |
| | 1470201-20 | PLATE ASSY | 1 | |
| - 94 | 1470201-22 | PLATE | 1 | |
| | 1470201-4 | BRACKET ASSY | 1 | |
| - 95 | 1470201-5 | BRACKET | 1 | |
| - 96 | NAS43DD1-60 | SPACER | 2 | |
| - 97 | AN507-632R24 | SCREW | 2 | |

SPEAKER INSTALLATIONS

NOTE

LATE MODEL 150 SPEAKERS ARE MOUNTED IN LEFT WING ROOT.

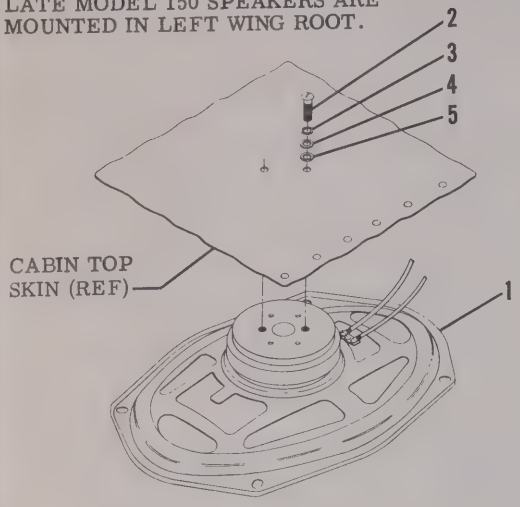


INSTALLATION **A** - MODELS 150, 172, P172, 180, & 185 - THRU 1965 ONLY.

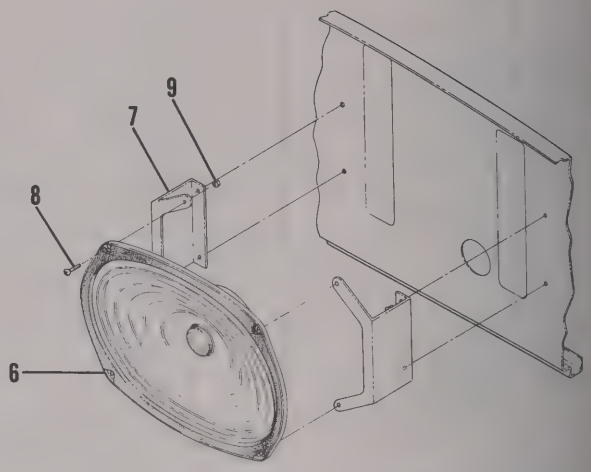


INSTALLATION **B** - MODEL 150 - 1966 & ON.

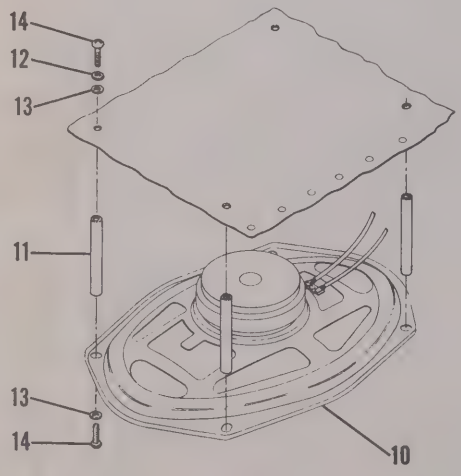


INSTALLATION **C** - MODELS 172, 180, & 185 - 1966 & ON.

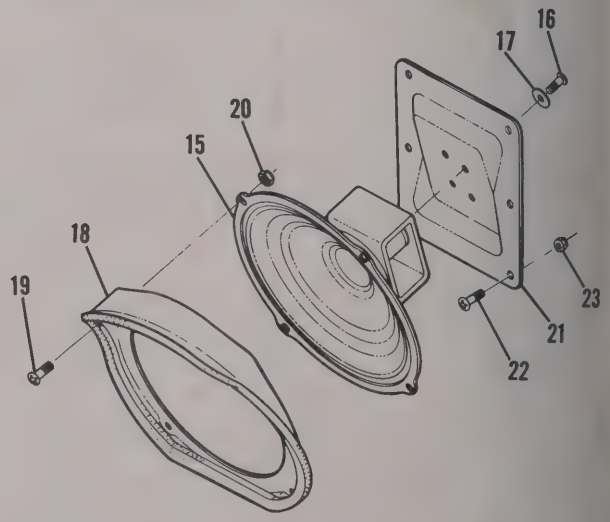


INSTALLATION **D** - MODELS 182, 205, 206, & 210 THRU LATE 1964 - WHEN ITEM IS EXHAUSTED, USE INSTALLATION "E".

Figure 9-3. Speaker Installations - Sheet 1

SPEAKER INSTALLATIONS

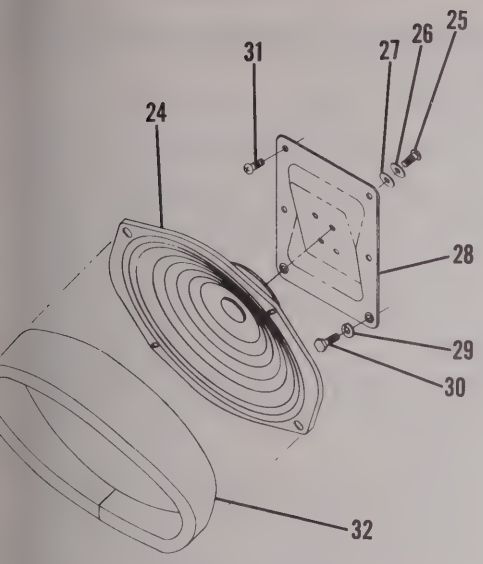


NSTALLATION **E** - MODELS 182, 205, 206, P206, U206, & 210, LATE 1964 THRU 1965 - HIS INSTALLATION SUPERCEDES INSTALL-TION "B" WHEN 0411062-4 SPEAKER SUPPLY S EXHAUSTED.

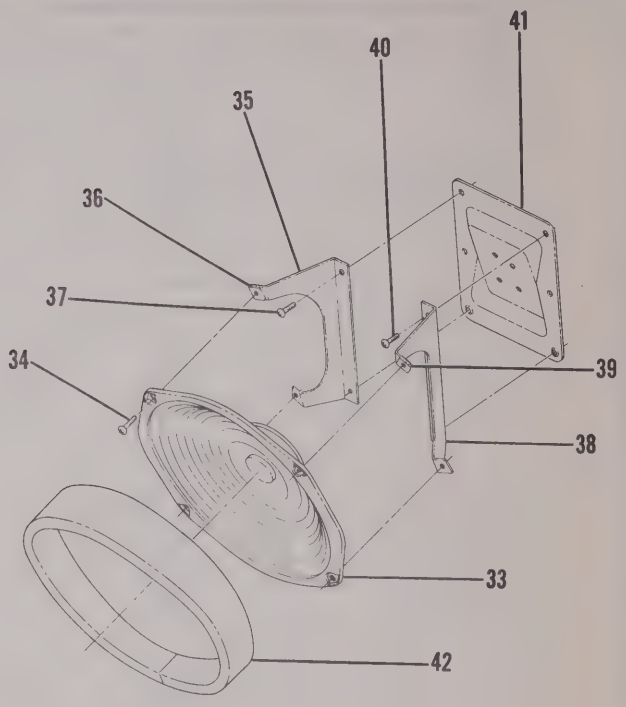


INSTALLATION **F** - MODELS 182, P206, U206, TP206, TU206, 210, & T210 - 1966 & ON.

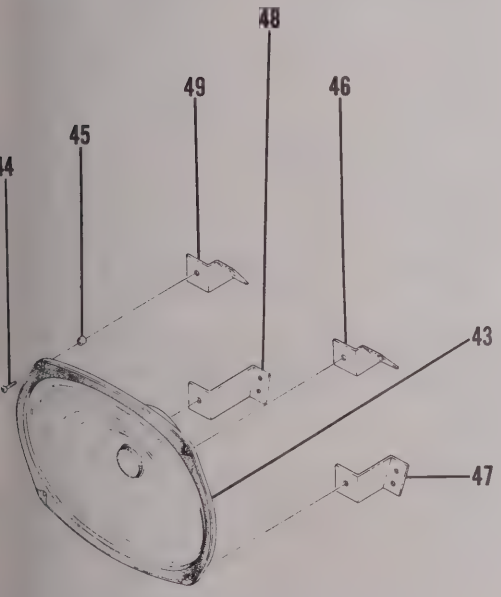


STALLATION **G** - MODEL 336 ONLY.

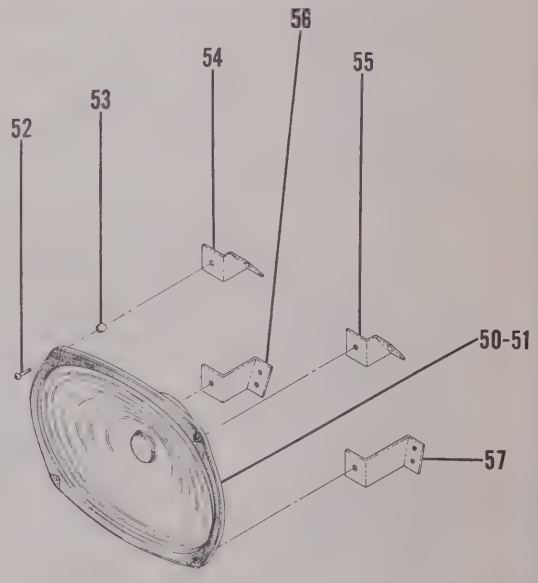


INSTALLATION **H** - MODEL 337 ONLY.

Figure 9-3. Speaker Installations - Sheet 2

| FIGURE AND INDEX NO. | PART NUMBER | DESCRIPTION<br>1 2 3 4 5 6 7 | UNITS PER ASSY | USABLE ON CODE |
|---|---|---|---|---|
| 9-3- | | SPEAKER INSTALLATIONS | N/P | |
| | | SPEAKER INSTALLATION A 150, 172, 180 & 185 THRU 1965 ONLY | N/P | |
| - 1 | 0770715-2 | SPEAKER WIRES NOT SUPPLIED<br>ATTACHING PARTS | 1 | |
| - 2 | AN515-8R4 | SCREW | 2 | |
| - 3 | AN936-B8 | WASHER-LOCK | 2 | |
| - 4 | AN960-10L | WASHER | 2 | |
| - 5 | S350 | WASHER-SEALING<br>---*--- | 2 | |
| | | SPEAKER INSTALLATION B MODEL 150 - 1966 & ON | N/P | |
| - 6 | 0770731-1 | SPEAKER ASSY WIRES SUPPLIED<br>ATTACHING PARTS | 1 | |
| - 7 | 0470011-1 | BRACKET | 2 | |
| - 8 | S1021Z8-6 | SCREW | 4 | |
| - 9 | NAS446-4-3 | NUT<br>---*--- | 4 | |
| | | SPEAKER INSTALLATION C MODELS 172, 180 & 185 - 1966 & ON | N/P | |
| - 10 | 0770731-1 | SPEAKER ASSY<br>ATTACHING PARTS | 1 | |
| - 11 | 0770730-1 | SPACER | 4 | |
| - 12 | S350 | WASHER - SEALING | 4 | |
| - 13 | AN960-10L | WASHER | 8 | |
| - 14 | AN515-8R6 | SCREW<br>---*--- | 6 | |
| | | SPEAKER INSTALLATION D MODELS 182, 205, 206 & 210 THRU LATE 1964 WHEN ITEM 15 IS EXHAUSTED, USE INSTALLATION E | N/P | |
| - 15 | 0411062-4 | SPEAKER<br>ATTACHING PARTS | 1 | |
| - 16 | AN515-8R8 | SCREW | 2 | |
| - 17 | AN970-3 | WASHER - FLAT<br>---*--- | 2 | |
| - 18 | 0700675-1 | BAFFLE ASSEMBLY<br>ATTACHING PARTS | 1 | |
| - 19 | AN515-8R8 | SCREW | 4 | |
| - 20 | MS20365-832C | NUT<br>---*--- | 4 | |
| - 21 | 0710636-1 | PLATE<br>ATTACHING PARTS | 1 | |
| - 22 | AN515-8R8 | SCREW | 6 | |
| - 23 | MS20365-832C | NUT<br>---*--- | 4 | |
| | | SPEAKER INSTALLATION E 182, 205, 206, P206, U206 & 210 - LATE 1964 THRU 1965 ONLY THIS INSTALLATION SUPERCEDES INSTALLATION D WHEN 0411062-4 SPEAKER SUPPLY IS EXHAUSTED | N/P | |
| - 24 | 0770715-2 | SPEAKER WIRES NOT SUPPLIED<br>ATTACHING PARTS | 1 | |
| - 25 | AN515-8R5 | SCREW | 2 | |
| - 26 | AN970-3 | WASHER | 2 | |
| - 27 | AN936A8 | WASHER<br>---*--- | 2 | |
| - 28 | 0710636-2 | PLATE ASSY - SPEAKER MOUNTING<br>ATTACHING PARTS | 1 | |
| - 29 | AN936A10 | WASHER | 2 | |
| - 30 | AN3-4A | BOLT | 2 | |
| - 31 | AN515-8R8 | SCREW<br>---*--- | 4 | |
| - 32 | 0770718-2 | BAFFLE | 1 | |

CONTINUED ON NEXT PAGE

| FIGURE AND INDEX NO. | PART NUMBER | DESCRIPTION 1 2 3 4 5 6 7 | UNITS PER ASSY | USABLE ON CODE |
|---|---|---|---|---|
| 9-3- | | SPEAKER INSTALLATION F 182, P206, U206, TP206, TU206, 210 & T210 - 1966 & ON | N/P | |
| - 33 | 0770731-1 | SPEAKER ASSY WIRES SUPPLIED | 1 | |
| | | ATTACHING PARTS | | |
| - 34 | S1021Z8-6 | SCREW | 4 | |
| | | ---*--- | | |
| | 0770732-1 | ADAPTER PLATE ASSY | 1 | |
| - 35 | 0770732-3 | ADAPTER PLATE | 1 | |
| - 36 | NAS395-11-3 | NUT | 2 | |
| | | ATTACHING PARTS | | |
| - 37 | S1021Z8-6 | SCREW | 4 | |
| | | ---*--- | | |
| | 0770732-2 | ADAPTER PLATE ASSY | 1 | |
| - 38 | 0770732-2 | ADAPTER PLATE | 1 | |
| - 39 | NAS395-11-3 | NUT | 2 | |
| | | ATTACHING PARTS | | |
| - 40 | S1021Z8-6 | SCREW | 4 | |
| | | ---*--- | | |
| - 41 | 0710636 | PLATE - SPEAKER MOUNTING---- STANDARD EQUIPMENT ON AIRCRAFT ---- | REF | |
| - 42 | 0770718-2 | BAFFLE | 1 | |
| | | SPEAKER INSTALLATION G MODEL 336 ONLY | N/P | |
| - 43 | 0770715-2 | SPEAKER WIRES NOT SUPPLIED | 1 | |
| | | ATTACHING PARTS | | |
| - 44 | S1021Z6-8C | SCREW | 4 | |
| - 45 | NAS43DD3-24 | SPACER | 4 | |
| | | ---*--- | | |
| - 46 | 1470048-2 | SUPPORT ASSEMBLY | 1 | |
| | 1470048-6 | SUPPORT | 1 | |
| | NAS686A3 | NUTPLATE | 1 | |
| - 47 | 1470048-1 | SUPPORT ASSEMBLY | 1 | |
| | 1470048-5 | SUPPORT | 1 | |
| | NAS686A3 | NUTPLATE | 1 | |
| - 48 | 1470048-3 | SUPPORT ASSEMBLY | 1 | |
| | 1470048-7 | SUPPORT | 1 | |
| | NAS686A3 | NUTPLATE | 1 | |
| - 49 | 1470048-4 | SUPPORT ASSEMBLY | 1 | |
| | 1470048-8 | SUPPORT | 1 | |
| | NAS686A3 | NUTPLATE | 1 | |
| | | SPEAKER INSTALLATION H MODEL 337 ONLY | N/P | |
| - 50 | 0770715-2 | SPEAKER WIRES NOT SUPPLIED THRU 1965 ONLY ---- | 1 | |
| - 51 | 0770731-1 | SPEAKER WIRES SUPPLIED 1966 & ON | 1 | |
| | | ATTACHING PARTS | | |
| - 52 | AN520-10R12 | SCREW | 4 | |
| - 53 | NAS43DD3-24 | SPACER | 4 | |
| | | ---*--- | | |
| - 54 | 1470048-2 | SUPPORT ASSEMBLY | 1 | |
| | 1470048-6 | SUPPORT | 1 | |
| | NAS686A3 | NUTPLATE | 1 | |
| - 55 | 1470048-4 | SUPPORT ASSY | 1 | |
| | 1470048-8 | SUPPORT | 1 | |
| | NAS686A3 | NUTPLATE | 1 | |
| - 56 | 1470048-1 | SUPPORT ASSY | 1 | |
| | 1470048-5 | SUPPORT | 1 | |
| | NAS686A3 | NUTPLATE | 1 | |
| - 57 | 1470048-3 | SUPPORT ASSY | 1 | |
| - 57 | 1470048-7 | SUPPORT | 1 | |
| | NAS686A3 | NUTPLATE | 1 | |

MICROPHONE INSTALLATIONS

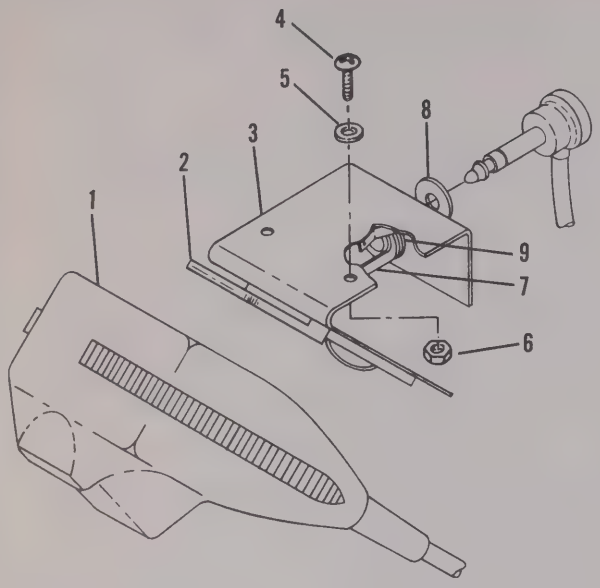


INSTALLATION **A** - 150 MODELS THRU 1965 AND 1965 & ON 180 & 185 MODELS

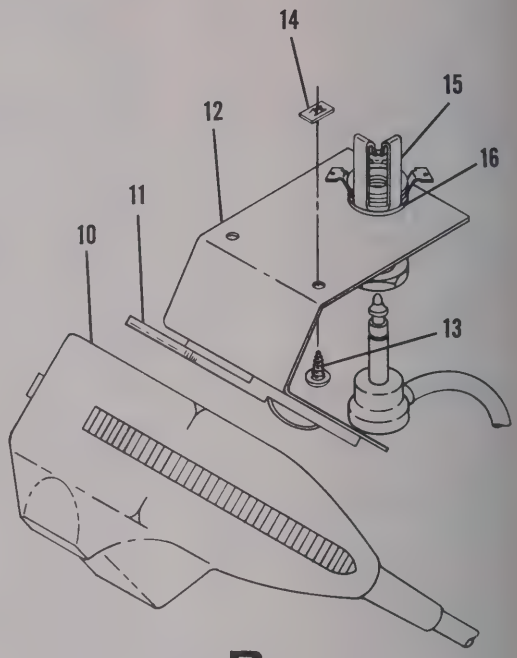


INSTALLATION **B**
180 & 185 MODELS THRU 1964 ONLY

CONTROL PEDESTAL COVER

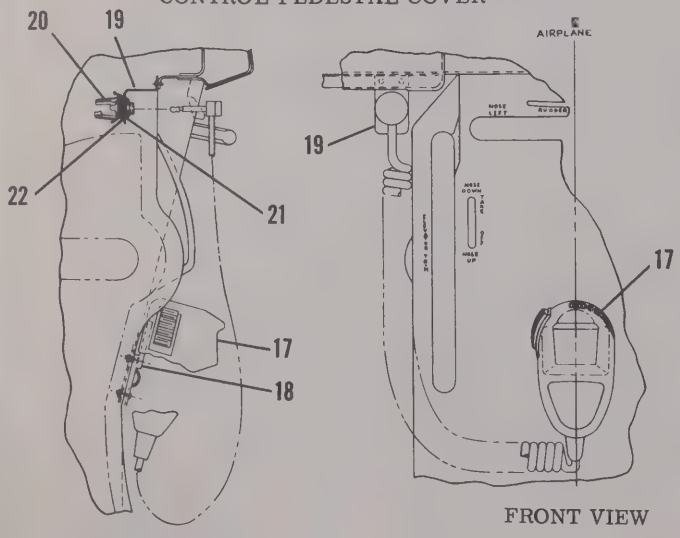


LEFT SIDE VIEW

FRONT VIEW

INSTALLATION **C** - ALL 205 & 206 MODELS AND 1965 & ON 182 MODELS

CONTROL PEDESTAL COVER

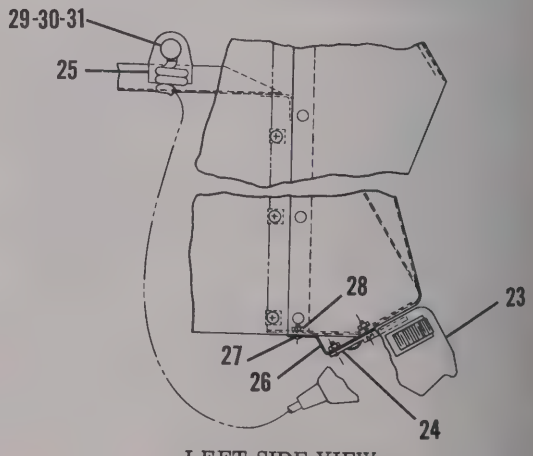


LEFT SIDE VIEW

INSTALLATION **D** - MODEL 336

Figure 9-4. Microphone Installation - Sheet 1

MICROPHONE INSTALLATIONS

INSTALLATION E -182 MODELS THRU 1964 ONLY
210, 172 & P172 MODELS THRU 1963 ONLY

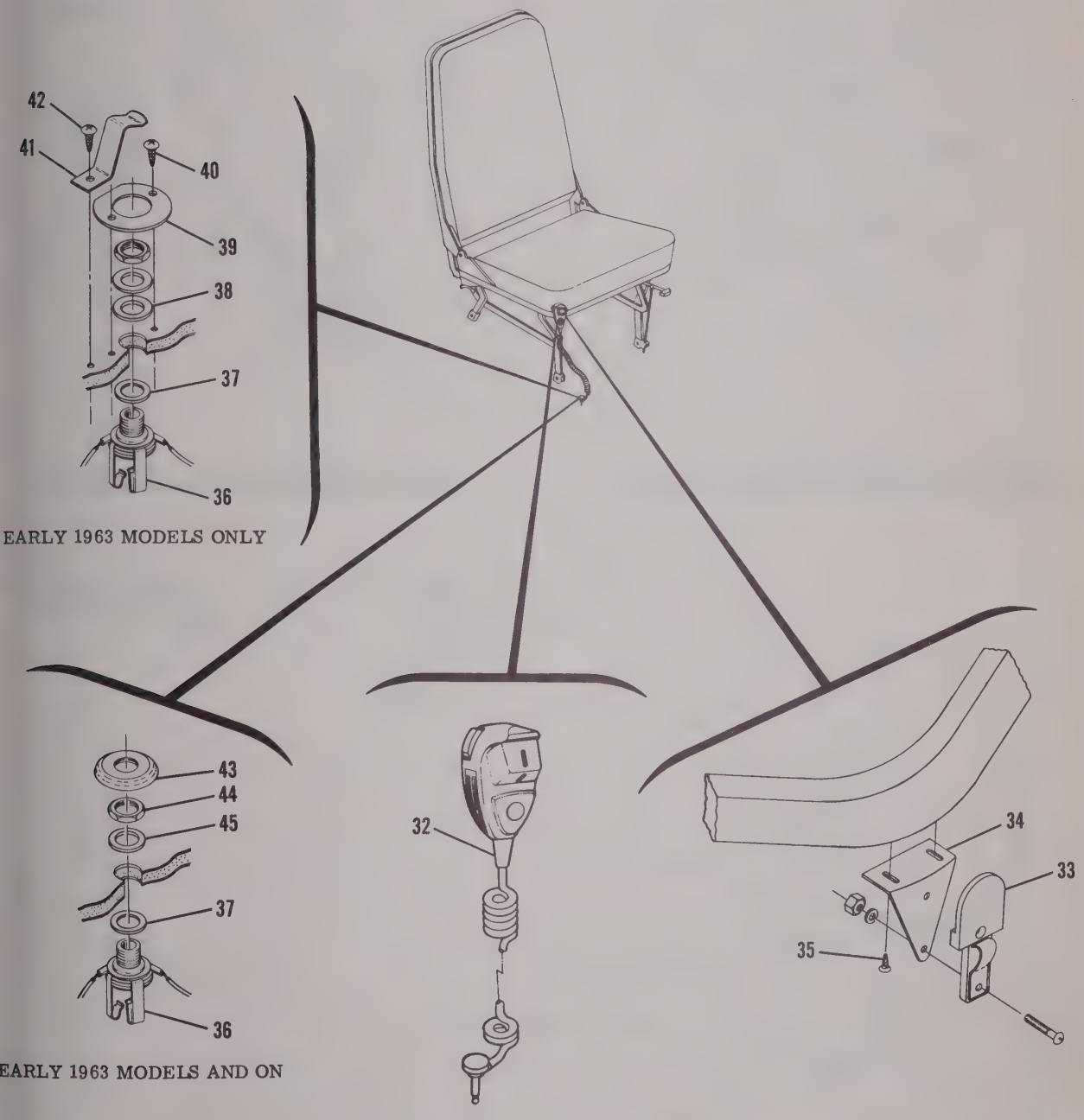


Figure 9-4. Microphone Installation - Sheet 2

## MICROPHONE INSTALLATIONS

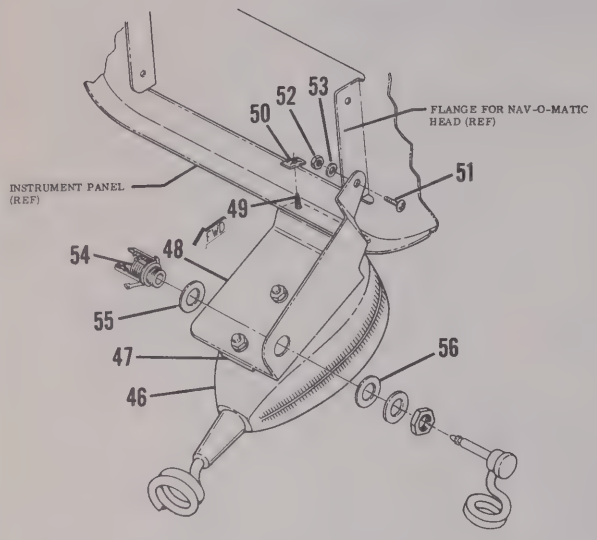


INSTALLATION **F** - MODEL 172, 1964 ONLY

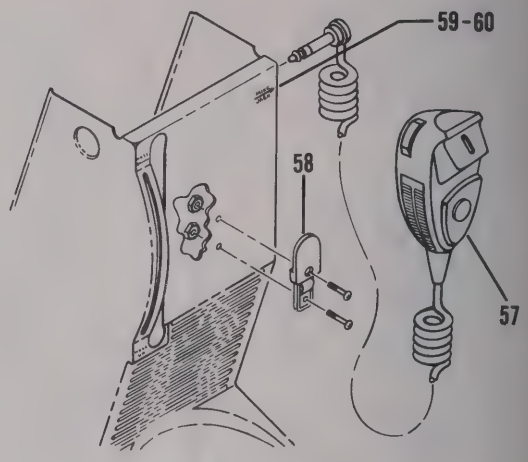


INSTALLATION **G** - MODEL 172, 1965 & ON

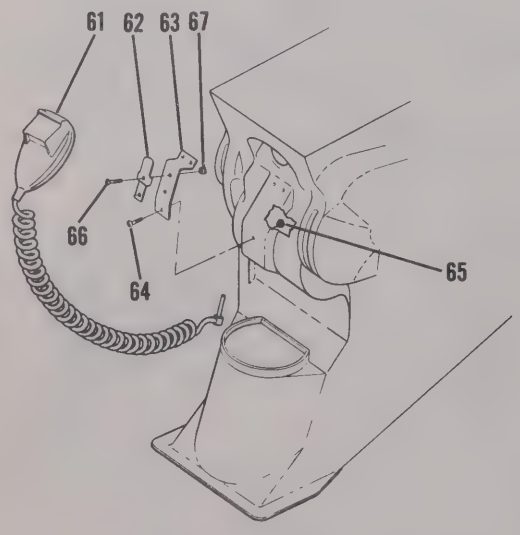


INSTALLATION **H** - 210, 1964 & ON

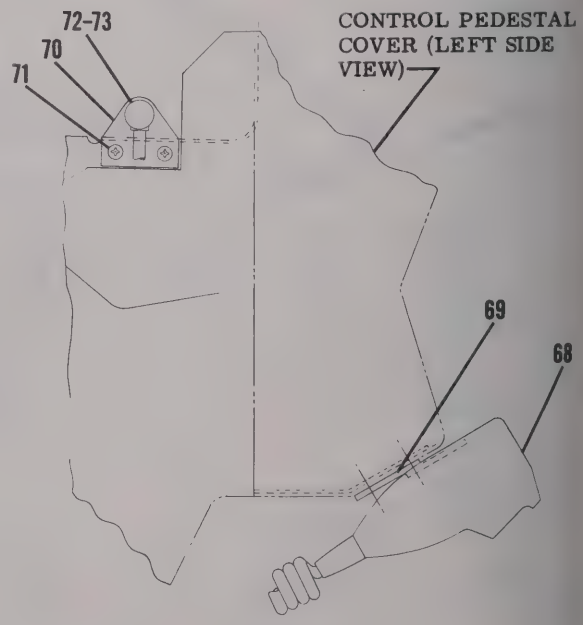


INSTALLATION **J** - 337, 1965 & ON

Figure 9-4. Microphone Installation - Sheet 3

MICROPHONE INSTALLATIONS

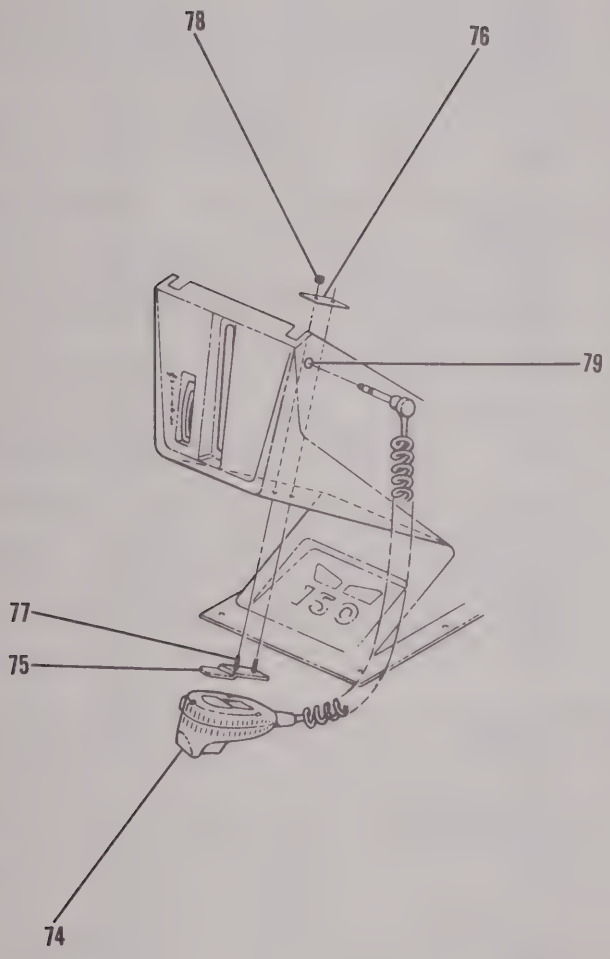


INSTALLATION **K**

MODEL 150 - 1966 & ON

Figure 9-4. Microphone Installation - Sheet 4

| FIGURE AND INDEX NO. | PART NUMBER | DESCRIPTION<br>1 2 3 4 5 6 7 | UNITS PER ASSY | USABLE ON CODE |
|---|---|---|---|---|
| 9-4- | | MICROPHONE INSTALLATION---------- | N/P | |
| | | MICROPHONE INSTALLATION A ----150 MODELS THRU 1965 AND----- | N/P | |
| | | 180 & 185 1965 MODELS AND ON | | |
| | S1342-5 | MICROPHONE KIT---------- | 1 | |
| - 1 | S1342-1 | MICROPHONE ASSEMBLY ---------- | 1 | |
| - 2 | 0411057-3 | BRACKET---------- | 1 | |
| - 3 | 0411968-1 | MOUNTING BRACKET ---------- | 1 | |
| | | ATTACHING PARTS | | |
| - 4 | S1021Z6-8 | SCREW ---------- | 2 | |
| - 5 | AN960-6L | WASHER ---------- | 2 | |
| - 6 | MS20365-632C | NUT ---------- | 2 | |
| | | ---*--- | | |
| - 7 | S1102-1 | JACK MICROPHONE ---------- | 1 | |
| - 8 | S1196-1 | WASHER ---------- | 1 | |
| - 9 | S1196-2 | WASHER ---------- | 1 | |
| | | MICROPHONE INSTALLATION B ----180 & 185 MODELS THRU ---- | N/P | |
| | | 1964 ONLY | | |
| | S1342-5 | MICROPHONE KIT---------- | 1 | |
| - 10 | S1342-1 | MICROPHONE ASSEMBLY ---------- | 1 | |
| - 11 | 0411057-3 | BRACKET---------- | 1 | |
| - 12 | 0713200-19 | MOUNTING BRACKET ---------- | 1 | |
| | | ATTACHING PARTS | | |
| - 13 | S1021Z6-8 | SCREW ---------- | 2 | |
| - 14 | NAS446-2-3 | NUT ---------- | 2 | |
| | | ---*--- | | |
| - 15 | S1102-1 | JACK-MICROPHONE ---------- | 1 | |
| - 16 | 6529 | WASHER WHEN SUPPLY IS EXHAUSTED USE S-1196-1--------- | 1 | |
| | 6517 | WASHER WHEN SUPPLY IS EXHAUSTED USE S-1196-2--------- | 1 | |
| | | MICROPHONE INSTALLATION C ----ALL 205 & 206 MODELS AND ---- | N/P | |
| | | 1965 & ON 182 MODELS | | |
| | S1342-5 | MICROPHONE KIT---------- | 1 | |
| - 17 | S1342-1 | MICROPHONE ASSEMBLY ---------- | 1 | |
| - 18 | 0411057-3 | BRACKET---------- | 1 | |
| - 19 | 1270638-1 | BRACKET-MIKE JACK ---------- | 1 | |
| - 20 | S1102-1 | JACK-MICROPHONE ---------- | 1 | |
| - 21 | S1196-1 | WASHER ---------- | 1 | |
| - 22 | S1196-2 | WASHER ---------- | 1 | |
| | | MICROPHONE INSTALLATION D ----MODEL 336 ---------- | N/P | |
| | S1342-5 | MICROPHONE KIT---------- | 1 | |
| - 23 | S1342-1 | MICROPHONE ASSEMBLY ---------- | 1 | |
| - 24 | 0411057-3 | BRACKET---------- | 1 | |
| - 25 | 1413517-11 | BRACKET-MIKE JACK ---------- | 1 | |
| - 26 | 1470096-2 | MOUNTING BRACKET ---------- | 1 | |
| | | ATTACHING PARTS | | |
| - 27 | AN515-6R6 | SCREW ---------- | 1 | |
| - 28 | MS20365-632C | NUT ---------- | 1 | |
| | | ---*--- | | |
| - 29 | S1102-1 | JACK-MICROPHONE ---------- | 1 | |
| - 30 | S1196-1 | WASHER ---------- | 1 | |
| - 31 | S1196-2 | WASHER ---------- | 1 | |
| | | MICROPHONE INSTALLATION E ----182 MODELS THRU 1964--------- | N/P | |
| | | ONLY AND 210, 172 & P172 THRU 1963 ONLY. | | |
| | S1342-5 | MICROPHONE KIT---------- | 1 | |
| - 32 | S1342-1 | MICROPHONE ASSY ---------- | 1 | |
| - 33 | 0411057-3 | BRACKET---------- | 1 | |
| - 34 | 1270438-1 | MOUNTING BRACKET ---------- | 1 | |
| | | ATTACHING PARTS | | |
| - 35 | S1021A6-6 | SCREW ---------- | 2 | |
| | | ---*--- | | |
| - 36 | S1102-1 | JACK-MICROPHONE ---------- | 1 | |
| - 37 | S1196-1 | WASHER ---------- | 1 | |
| - 38 | S1196-2 | WASHER USED ON SOME EARLY 1963 MODELS ONLY --------- | 1 | |
| - 39 | S1352-1 | WASHER USED ON SOME EARLY 1963 MODELS ONLY --------- | 1 | |
| | | ATTACHING PARTS | | |
| - 40 | S1021Z4-6 | SCREW USED ON SOME EARLY 1963 MODELS ONLY --------- | 1 | |
| | | ---*--- | | |

CONTINUED ON NEXT PAGE

| FIGURE AND INDEX NO. | PART NUMBER | DESCRIPTION 1 2 3 4 5 6 7 | UNITS PER ASSY | USABLE ON CODE |
|---|---|---|---|---|
| -4- 41 | 0513318-1 | CLIP-----USED ON SOME EARLY 1963 MODELS ONLY --------- | 1 | |
| | | ATTACHING PARTS | | |
| - 42 | S1021Z4-6 | SCREW USED ON SOME EARLY 1963 MODELS ONLY --------- | 1 | |
| | | ---*--- | | |
| - 43 | 1270456-1 | WASHER REPLACES ITEMS 39 THRU 42 ---------- | 1 | |
| - 44 | 382-32062 | NUT ---------- | 1 | |
| - 45 | 1270043-2 | WASHER REPLACES ITEM 38 ---------- | 1 | |
| | | MICROPHONE INSTALLATION F ----1964 172 MODELS ONLY--------- | N/P | |
| | S1342-5 | MICROPHONE KIT---------- | 1 | |
| - 46 | S1342-1 | MICROPHONE ASSEMBLY ---------- | 1 | |
| - 47 | 0411057-3 | BRACKET---------- | 1 | |
| - 48 | 0570030-1 | MOUNTING BRACKET ---------- | 1 | |
| | | ATTACHING PARTS | | |
| - 49 | S1021Z6-6 | SCREW ---------- | 2 | |
| - 50 | NAS446-2-3 | NUT ---------- | 2 | |
| - 51 | AN515-B6R6 | SCREW ---------- | 1 | |
| - 52 | AN340-B6 | NUT ---------- | 1 | |
| - 53 | AN936A6 | WASHER ---------- | 1 | |
| | | ---*--- | | |
| - 54 | S1102-1 | JACK-MICROPHONE ---------- | 1 | |
| - 55 | S1196-1 | WASHER ---------- | 1 | |
| - 56 | S1196-2 | WASHER ---------- | 1 | |
| | | MICROPHONE INSTALLATION G ----172 MODELS 1964 & ON--------- | N/P | |
| | S1342-5 | MICROPHONE KIT---------- | 1 | |
| - 57 | S1342-1 | MICROPHONE ASSEMBLY ---------- | 1 | |
| - 58 | 0411057-3 | BRACKET---------- | 1 | |
| - 59 | S1102-1 | JACK-MICROPHONE ---------- | 1 | |
| - 60 | S1196-2 | WASHER ---------- | 1 | |
| | | MICROPHONE INSTALLATION H ----210 MODELS, 1964 & ON ---- | N/P | |
| | S1342-5 | MICROPHONE KIT---------- | 1 | |
| - 61 | S1342-1 | MICROPHONE ASSEMBLY ---------- | 1 | |
| - 62 | 0411057-3 | BRACKET---------- | 1 | |
| - 63 | 1270468-1 | BRACKET ---------- | 1 | |
| | | ATTACHING PARTS | | |
| - 64 | S1021Z4-4 | SCREW ---------- | 3 | |
| - 65 | NAS446-1-3 | NUT ---------- | 3 | |
| | | ---*--- | | |
| | S1102-1 | JACK-MICROPHONE ---------- | 1 | |
| - 66 | AN515-6R4 | SCREW ---------- | 2 | |
| - 67 | MS20365-632C | NUT ---------- | 2 | |
| | | MICROPHONE INSTALLATION J ----MODEL 337 ---------- | N/P | |
| - 68 | S1342-5 | MICROPHONE KIT---------- | 1 | |
| | S1342-1 | MICROPHONE ASSEMBLY ---------- | 1 | |
| - 69 | 0411057-3 | BRACKET---------- | 1 | |
| - 70 | 1513627-1 | BRACKET ---------- | 1 | |
| | | ATTACHING PARTS | | |
| - 71 | AN515-8R6 | SCREW ---------- | 2 | |
| | MS20365-832C | NUT ---------- | 2 | |
| | | ---*--- | | |
| - 72 | S1102-1 | JACK-MICROPHONE ---------- | 1 | |
| - 73 | S1196-2 | WASHER ---------- | 1 | |

CONTINUED ON NEXT PAGE

| FIGURE AND INDEX NO. | PART NUMBER | DESCRIPTION<br>1 2 3 4 5 6 7 | UNITS PER ASSY | USABL ON CODE |
|---|---|---|---|---|
| 9-4- | | MICROPHONE INSTALLATION K ----1966 & ON 150 MODELS ONLY---- | N/P | |
| | S1342-5 | MICROPHONE KIT-----SUPERSEDED BY C596501-0101---------- | 1 | |
| - 74 | S1342-1 | MICROPHONE ASSEMBLY -----SUPERSEDED BY C596501-0102 ---- | 1 | |
| - 75 | 0411057-3 | BRACKET-----SUPERSEDED BY C596501-0103 ---------- | 1 | |
| - 76 | 0413418 | DOUBLER ---------- | 1 | |
| | | ATTACHING PARTS | | |
| - 77 | S1021Z6-6 | SCREW ---------- | 2 | |
| - 78 | NAS446-2-3 | NUT ---------- | 2 | |
| | | ---*--- | | |
| - 79 | S1102-1 | MIKE JACK---------- | 1 | |
| | | ATTACHING PARTS | | |
| | S1196-1 | WASHER ---------- | 1 | |
| | | ---*--- | | |

HEADSET INSTALLATION

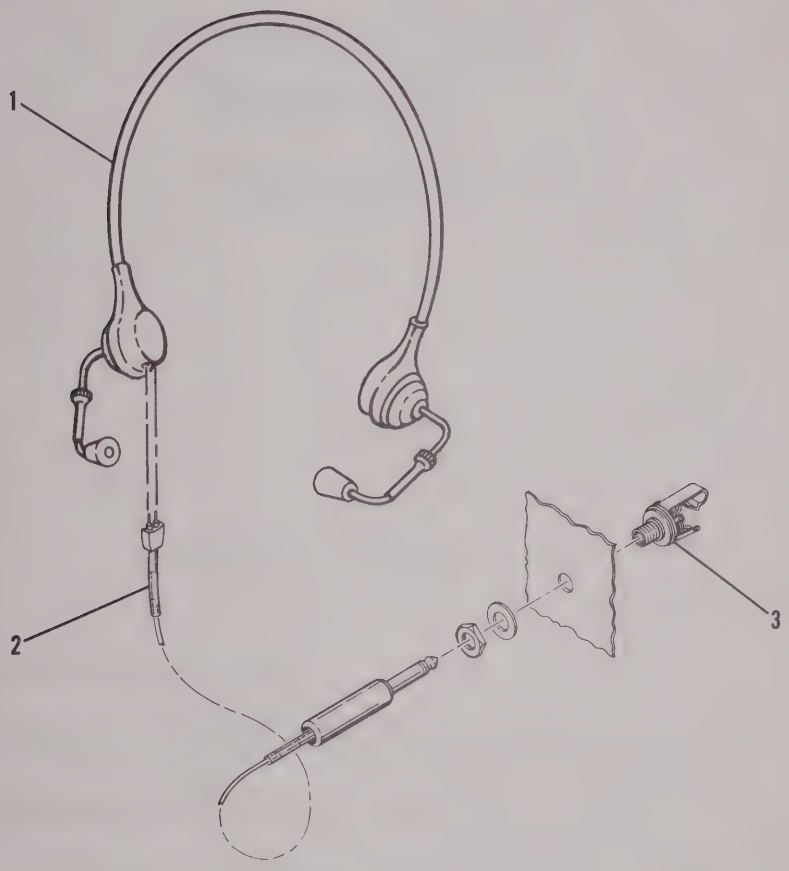


Figure 9-5. Headset Installation

| FIGURE AND INDEX NO. | PART NUMBER | DESCRIPTION<br>1 2 3 4 5 6 7 | UNITS PER ASSY | USABLE ON CODE |
|---|---|---|---|---|
| 9-5- | | HEADSET INSTALLATION ALL MODELS | N/P | |
| | 0770039-1 | HEADSET ASSY | 1 | |
| - 1 | 0770039-2 | TWINSET | 1 | |
| - 2 | 0770039-3 | CORD ASSY | 1 | |
| - 3 | S1103-1 | PHONE JACK | 1 | |

# SECTION X

# MISCELLANEOUS ELECTRONIC EQUIPMENT

TABLE OF CONTENTS


| Figure | | Page |
|---|---|---|
| 10-1 | Radio Cooling Installations | 10-2 |
| 10-2 | Rheostat Chart for Standard Flood Light Dimming | 10-12 |
| 10-3 | Dropping Resistor Chart for Optional Post Lighting | 10-13 |
| 10-4 | Available Accessory Kits List - See Accessory Kit Catalog | |
| 10-5 | Radio Noise Filter Installations | 10-14 |

RADIO COOLING INSTALLATIONS

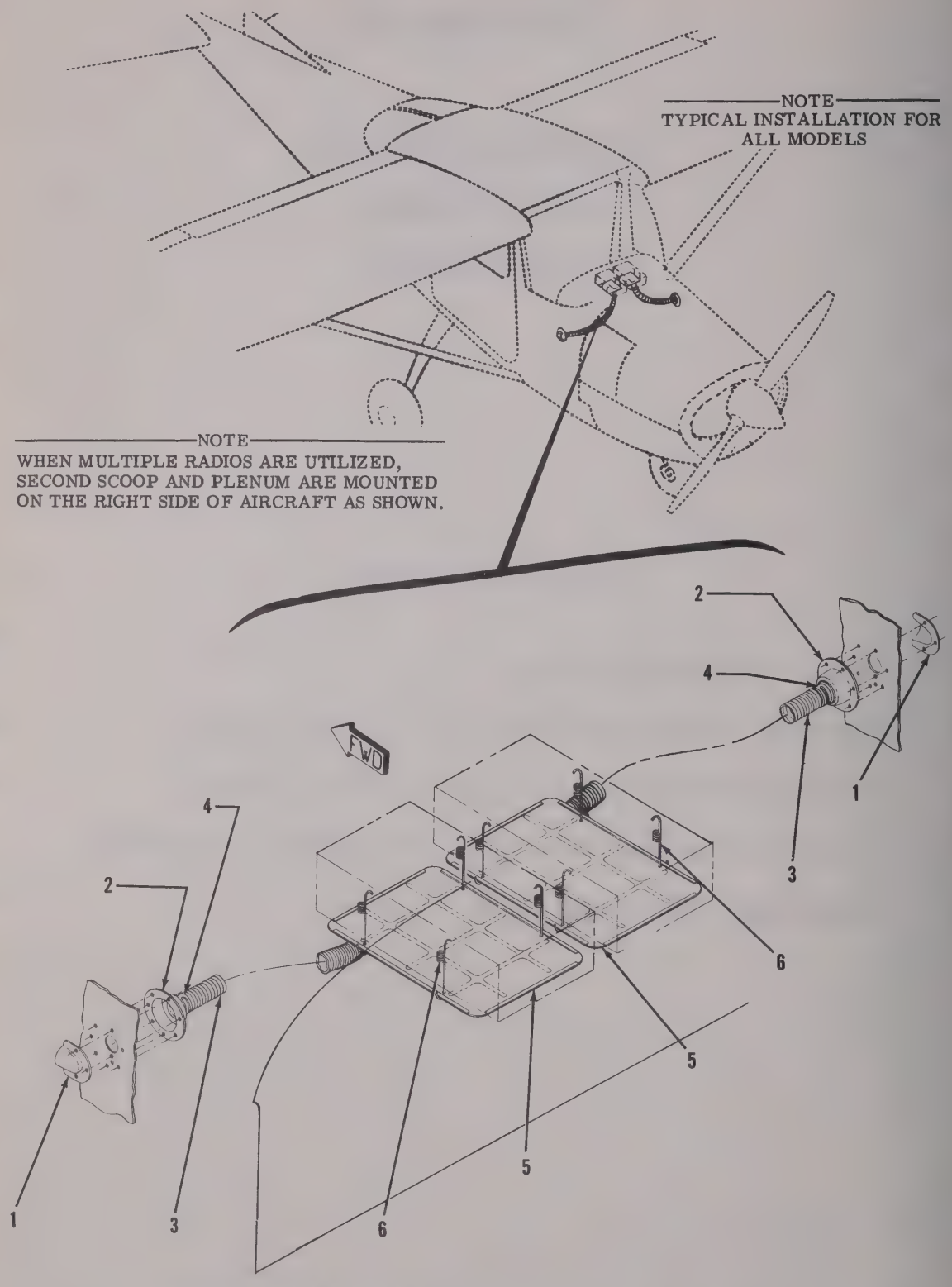


INSTALLATION **A** - 172 & P172 THRU 1963 AND 180 & 185 THRU 1964

Figure 10-1. Radio Cooling Installation - Sheet 1

RADIO COOLING INSTALLATIONS

NOTES

1. GOOD FOR ALL RADIOS EXCEPT 1965 & ON CESSNA 500 RADIO INSTALLATIONS.
2. TYPICAL INSTALLATION FOR ALL 150 MODELS, 1964 & ON 172 MODELS AND 1965 & ON 180 & 185 MODELS.

NOTE

REFER TO INSTALLATION "F" FOR CESSNA 500 TSO INSTALLATIONS.

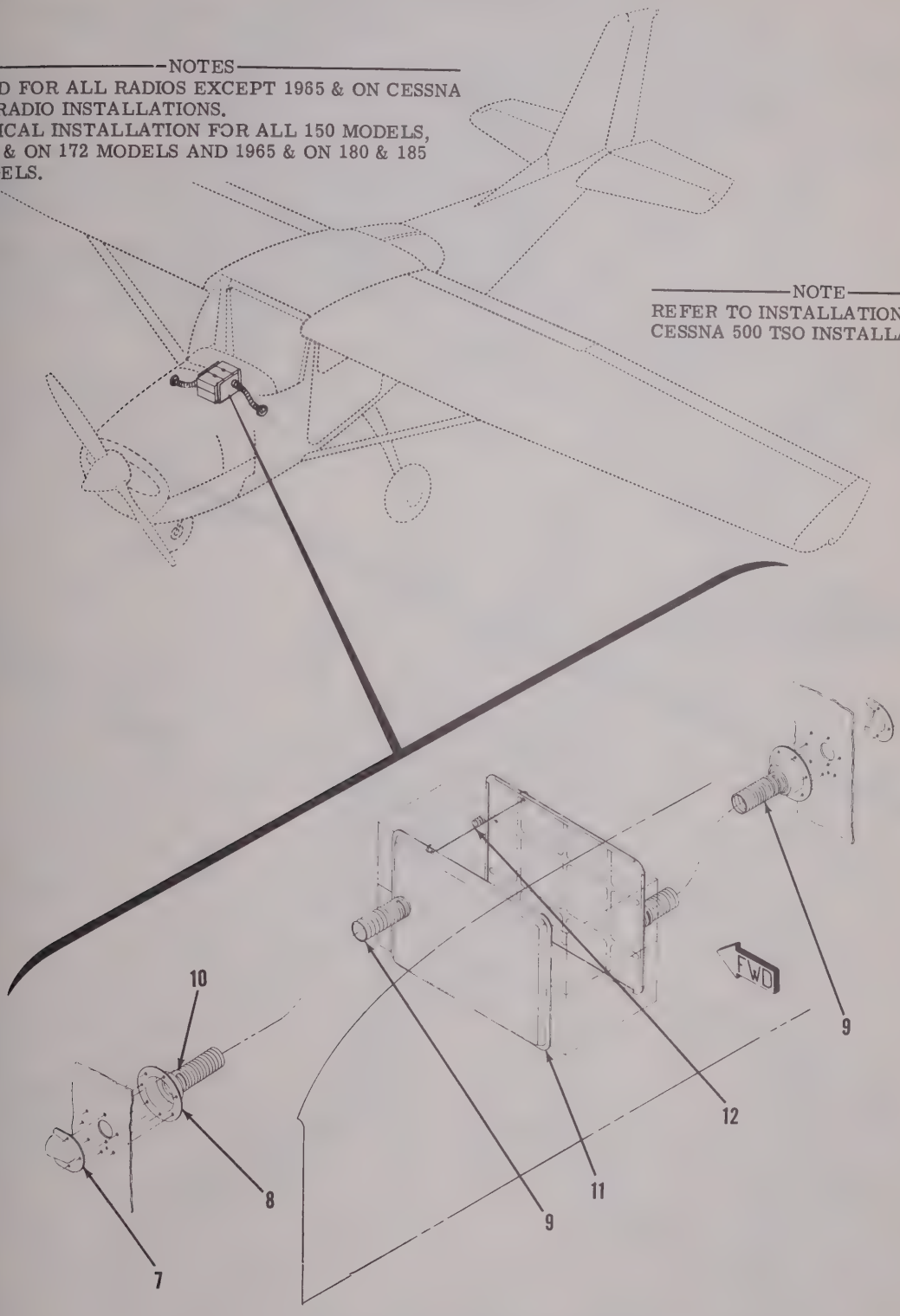


INSTALLATION **B** - ALL 150 MODELS, 1964 & ON 172 MODELS AND 1965 & ON 180 & 185 MODELS

Figure 10-1. Radio Cooling Installation - Sheet 2

RADIO COOLING INSTALLATIONS

TYPICAL INSTALLATION FOR MODELS
182, 205, 206, P206, U206, TP206,
TU206, 210 & T210

NOTES

1. WHEN LESS THAN FOUR RADIOS ARE STACKED, TWO 1470221-1 SPRINGS (16) MAY BE INSTALLED IN LIEU OF THE 1470222-1 CLIP-SPRINGS (20).
2. WHEN LESS THAN THREE RADIOS ARE STACKED, THE HOLES IN THE PLENUM CHAMBERS (17) & (18) EXTENDING BELOW THE RADIO'S ARE TO BE TAPED CLOSED USING A GOOD GRADE OF COMMERCIAL TAPE.
3. GOOD FOR ALL RADIOS EXCEPT 1965 & ON CESSNA 500 RADIO INSTALLATIONS. REFER TO INSTALLATION "E" FOR 1965 & ON CESSNA 500 RADIO COOLING.

NOTE

REFER TO INSTALLATION "F" FOR CESSNA 500 TSO INSTALLATIONS.

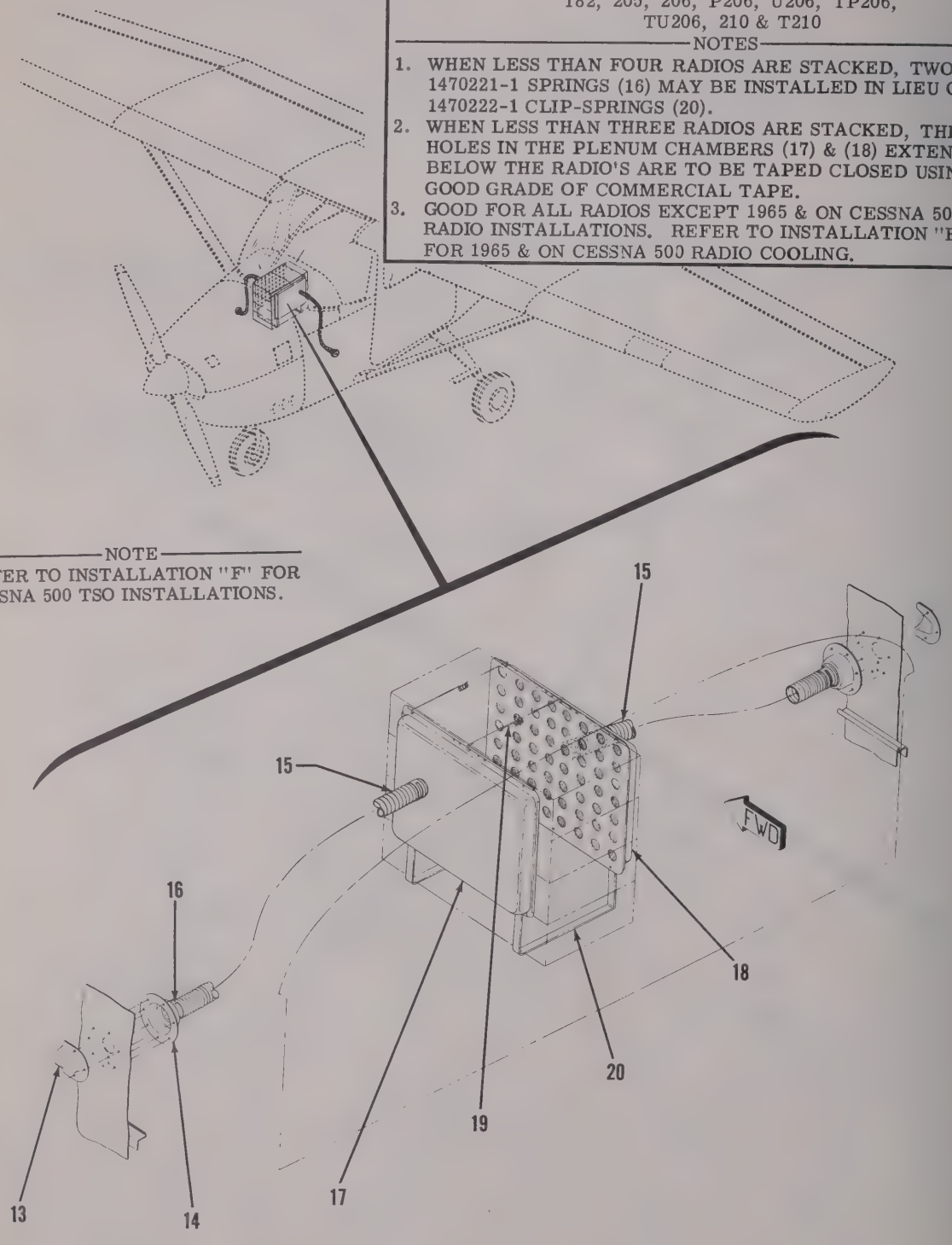


INSTALLATION C - 182, 205, 206, P206, U206, TP206, TU206, 210 & T210 ONLY

Figure 10-1. Radio Cooling Installation - Sheet 3

RADIO COOLING INSTALLATIONS

MODEL 336 NON-TSO INSTALLATION ONLY

NOTE

WHEN LESS THAN THREE (3) RADIOS ARE STACKED, THE HOLES IN THE PLENUM CHAMBERS (29) & (32) EXTENDING BELOW THE RADIO'S ARE TO BE TAPED CLOSED USING A GOOD GRADE OF COMMERCIAL TAPE.

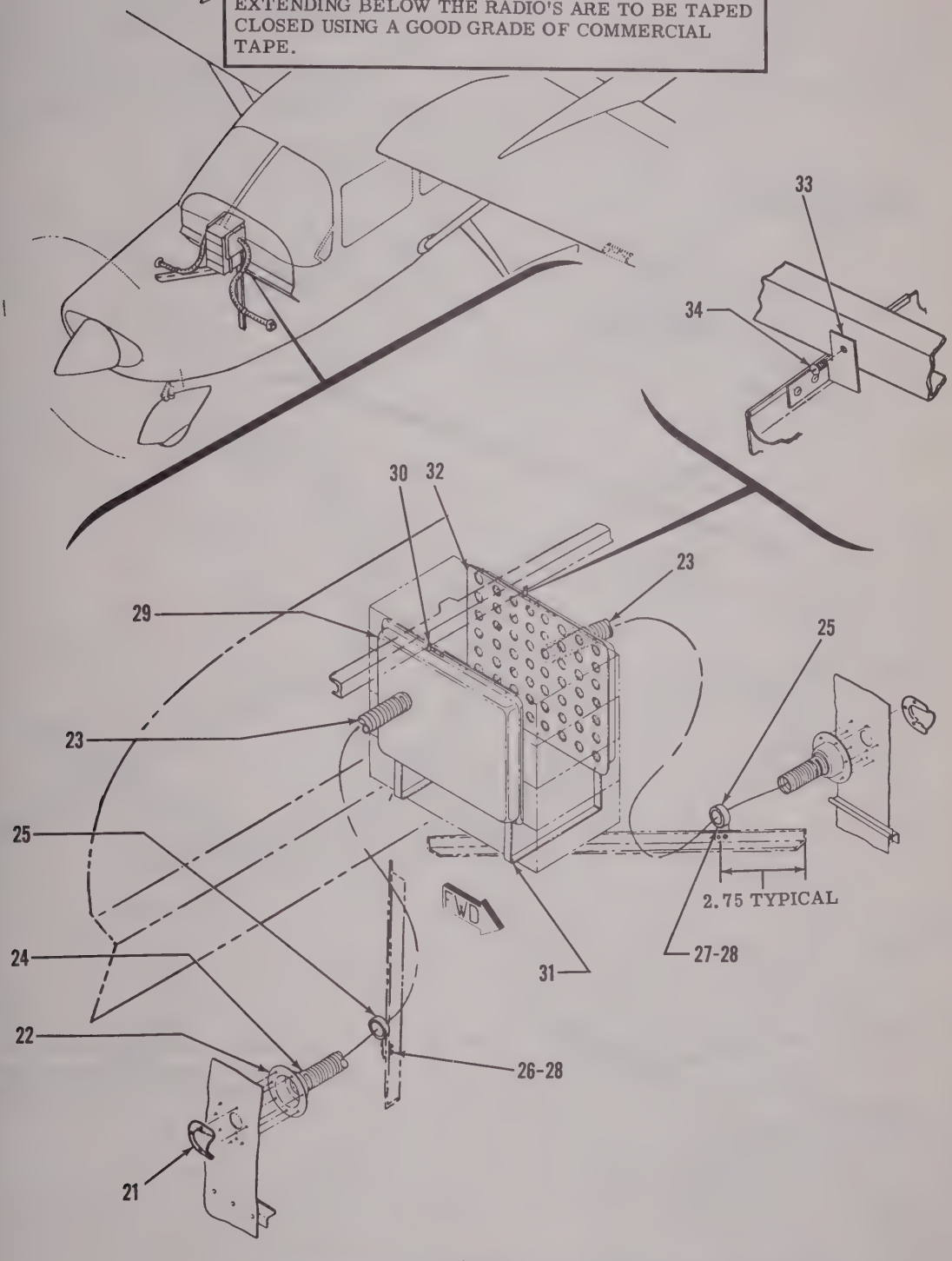


INSTALLATION D - 336 1964 & ON

Figure 10-1. Radio Cooling Installation - Sheet 4

RADIO COOLING INSTALLATIONS

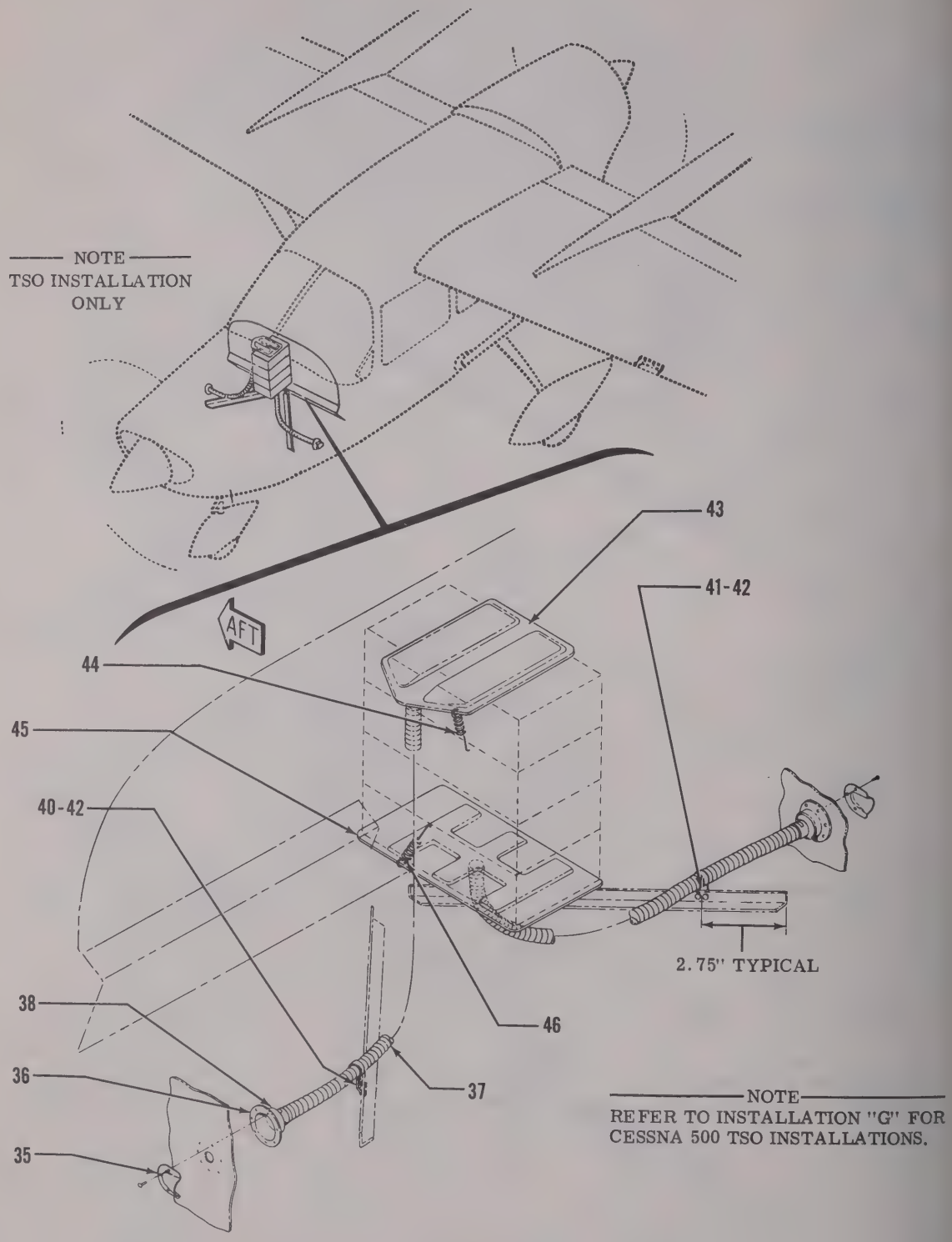


INSTALLATION **E** - 336 1964 & ON

Figure 10-1. Radio Cooling Installation - Sheet 5

RADIO COOLING INSTALLATION

NOTES

1. THIS RADIO COOLING IS ONLY USED WHEN 1965 & ON CESSNA 500 RADIOS ARE INSTALLED.
2. RADIO COOLING IS BUILT INTO THE CESSNA 500 MOUNTINGS. REFER TO SECTION II FOR REPLACEMENT PART NUMBER OF CESSNA 500 MOUNTINGS.
3. TYPICAL INSTALLATION FOR 1965 AND ON MODELS 180, 182, 185, P206, U206, & 210.

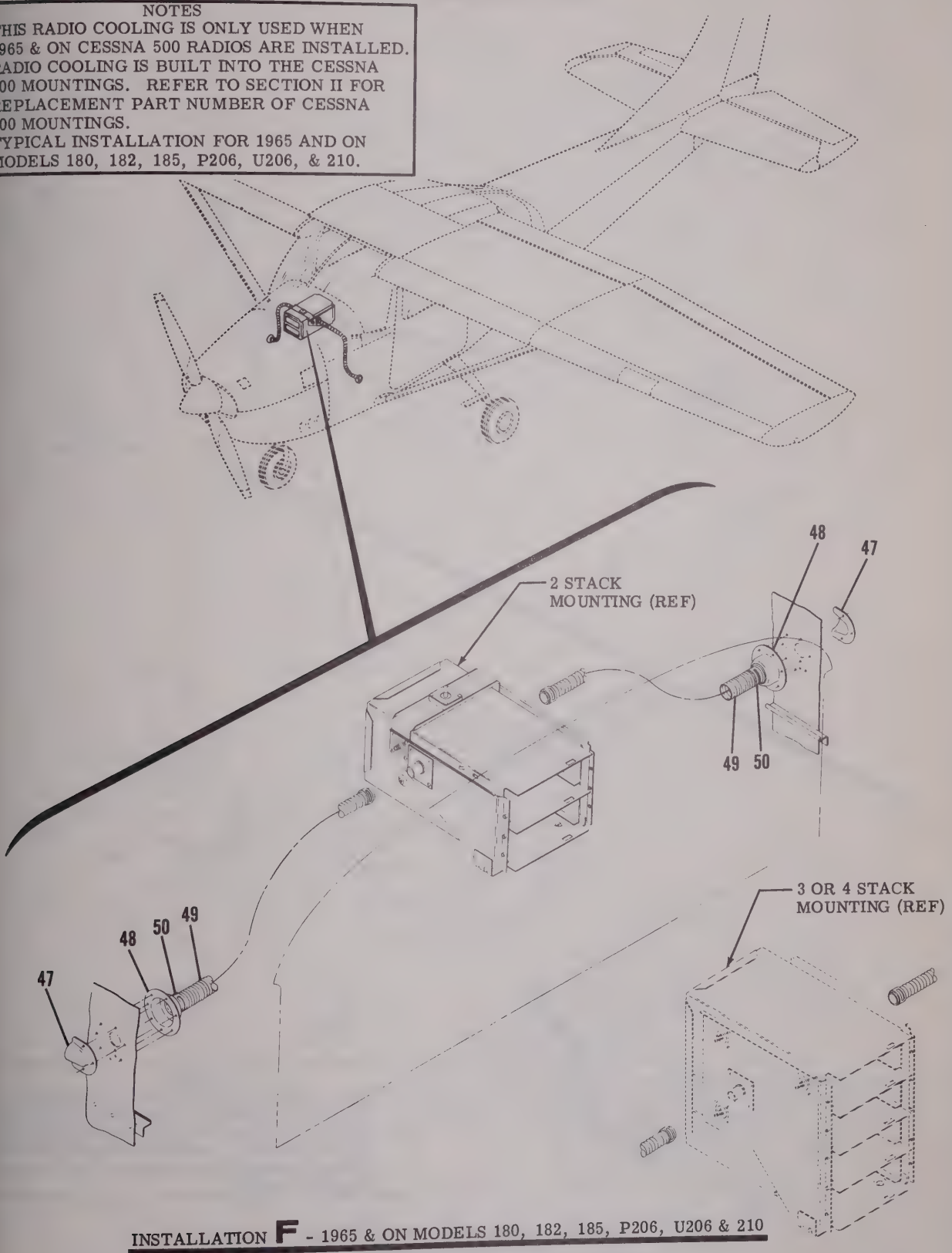


INSTALLATION F - 1965 & ON MODELS 180, 182, 185, P206, U206 & 210

Figure 10-1. Radio Cooling Installation - Sheet 6

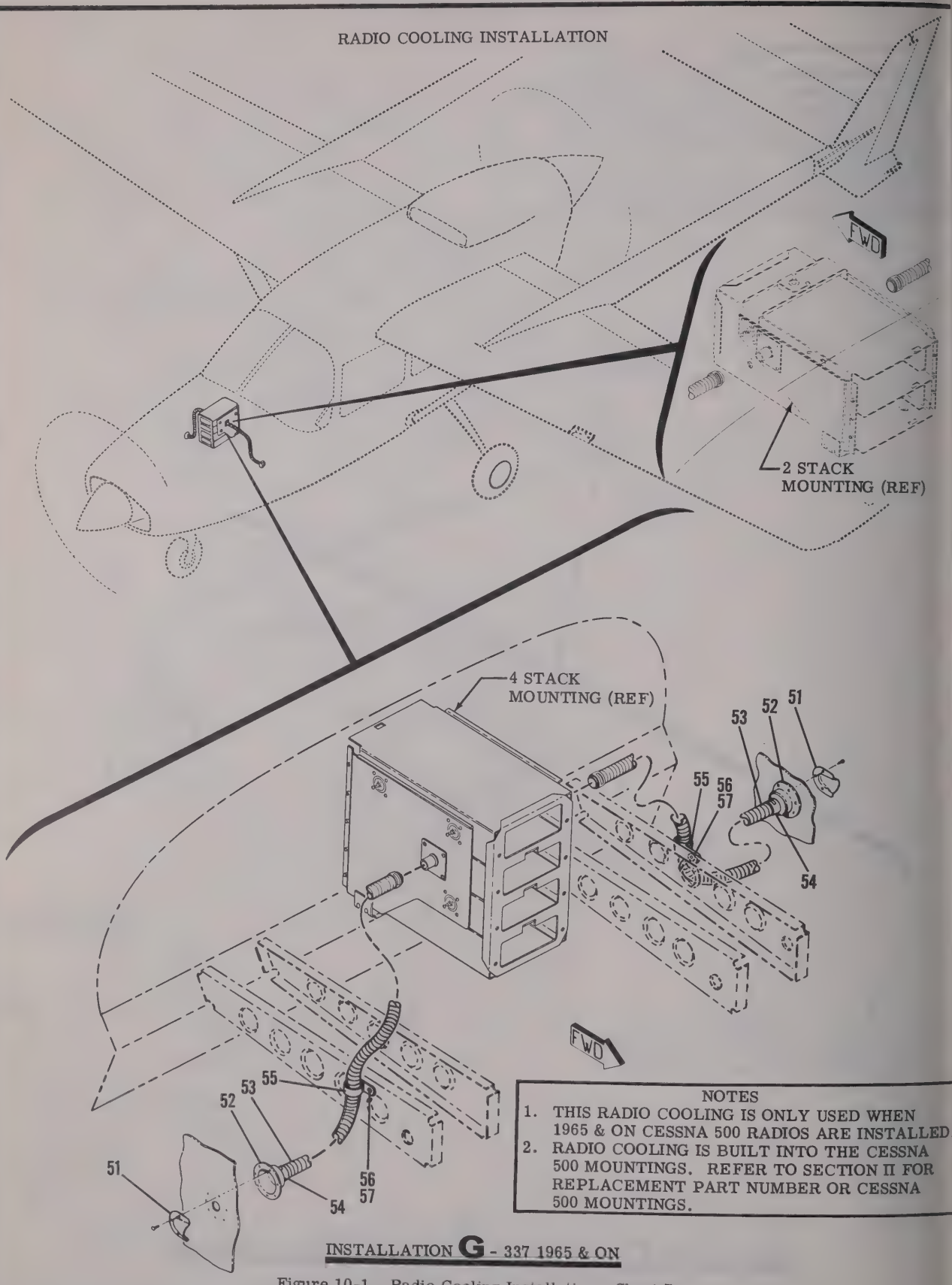


INSTALLATION G - 337 1965 & ON

Figure 10-1. Radio Cooling Installation - Sheet 7

RADIO COOLING INSTALLATION

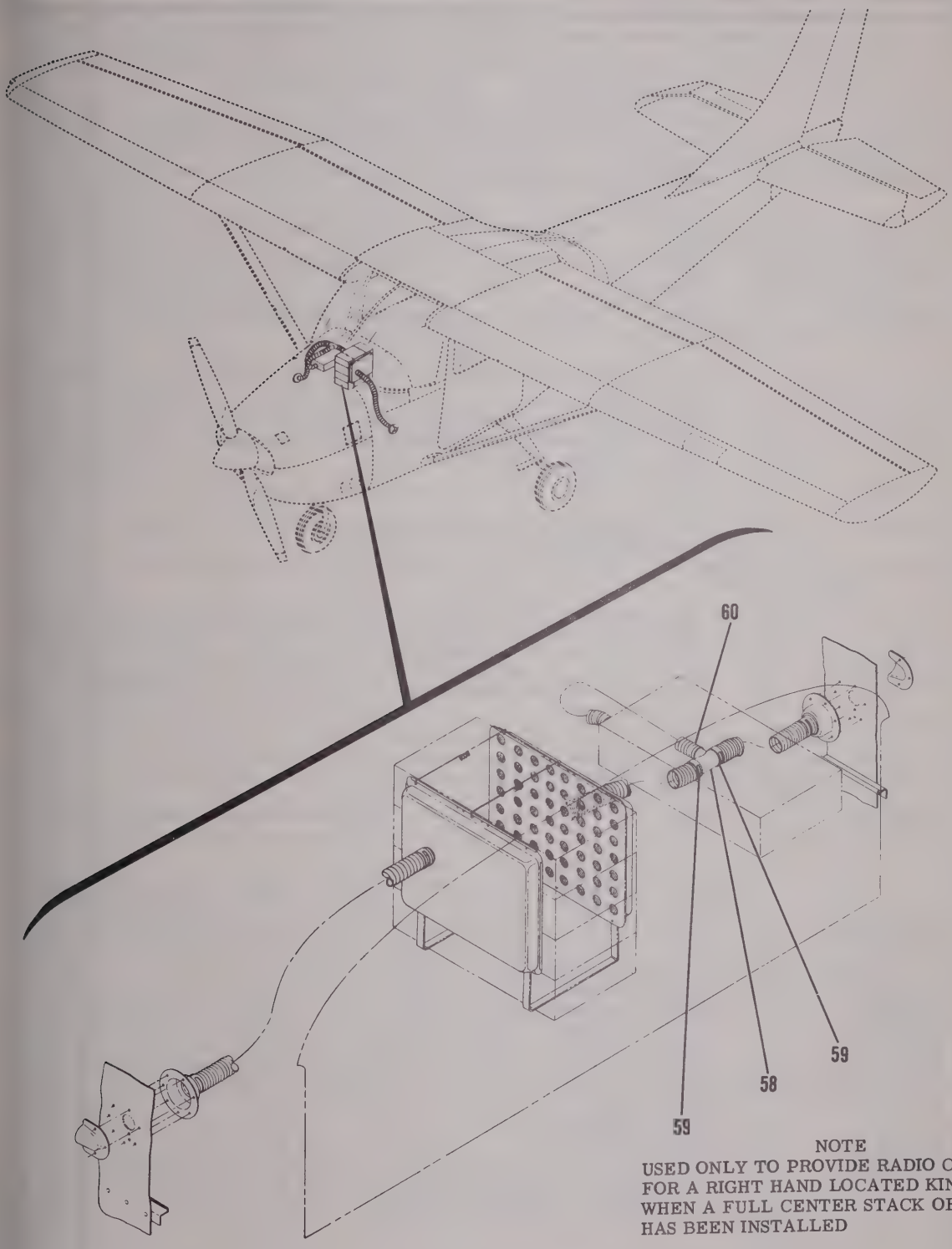


NOTE
USED ONLY TO PROVIDE RADIO COOLING FOR A RIGHT HAND LOCATED KING RADIO WHEN A FULL CENTER STACK OF RADIOS HAS BEEN INSTALLED

INSTALLATION **H** - 1965 & ON, ALL MODELS EXCEPT 337

Figure 10-1. Radio Cooling Installation - Sheet 8

| FIGURE AND INDEX NO. | PART NUMBER | DESCRIPTION<br>1 2 3 4 5 6 7 | UNITS PER ASSY | USABL ON CODE |
|---|---|---|---|---|
| 10-1- | | RADIO COOLING INSTALLATIONS ---------- | N/P | |
| | | RADIO COOLING INSTALLATION A SINGLE OR SIDE-BY-SIDE RADIO INSTALLATIONS 172 & P172 THRU 1963 AND 180 185 THRU 1964 | | |
| - 1 | 1470219-1 | SCOOP 2 REQD WHEN SIDE-BY-SIDE RADIOS ARE INSTALLED | 1 | |
| - 2 | 0770641-1 | ADAPTER ASSY 2 REQD WHEN SIDE-BY-SIDE RADIOS ARE ---- INSTALLED | 1 | |
| - 3 | S1053E7T | HOSE-----3 FEET REQD FOR LEFT SIDE - 2 FEET REQD FOR ---- RIGHT SIDE<br>ATTACHING PARTS | A/R | |
| - 4 | NAS397-16 | CLAMP 4 REQD WHEN SIDE BY SIDE RADIOS ARE INSTALLED<br>---*--- | 2 | |
| - 5 | 0570033-1 | PLENUM ASSY 2 REQD WHEN SIDE-BY-SIDE RADIOS ARE ---- INSTALLED<br>ATTACHING PARTS | 1 | |
| - 6 | 0770643-1 | SPRING 8 REQD WHEN SIDE BY SIDE RADIOS ARE INSTALLED<br>---*--- | 4 | |
| | | RADIO COOLING INSTALLATION B 172 1964 & ON AND--------- ALL 150 MODELS | N/P | |
| - 7 | 1470219-1 | SCOOP ---------- | 2 | |
| - 8 | 0770641-1 | ADAPTER ASSY ---------- | 2 | |
| - 9 | S1053E7T | HOSE-----28 INCHES REQD FOR LEFT SIDE - 20 INCHES ---- REQD FOR RIGHT SIDE<br>ATTACHING PARTS | 5FT | |
| - 10 | NAS397-16 | CLAMP ----------<br>---*--- | 4 | |
| - 11 | 0570033-1 | PLENUM CHAMBER---------- ATTACHING PARTS | 2 | |
| - 12 | 1470221-1 | SPRING ----------<br>---*--- | 4 | |
| | | NON-TSO RADIO COOLING INSTALLATION C 182, 205,--------- 206, P206, U206 & 210 | N/P | |
| - 13 | 1470219-1 | SCOOP ---------- | 2 | |
| - 14 | 0770641-1 | ADAPTER ASSY ---------- | 2 | |
| - 15 | S1053E7T | HOSE-----3 FEET REQD EACH SIDE ---------- ATTACHING PARTS | 6FT | |
| - 16 | NAS397-16 | CLAMP ----------<br>---*--- | 4 | |
| - 17 | 1470220-8 | PLENUM CHAMBER ASSY-L.H.---------- | 1 | |
| - 18 | 1470220-1 | PLENUM CHAMBER ASSY-R.H.---------- ATTACHING PARTS | 1 | |
| - 19 | 1470221-1 | SPRING ---------- | 2 | |
| - 20 | 1470222-1 | CLIP----------<br>---*--- | 2 | |
| | | NON-TSO -CESSNA 300 SERIES- RADIO COOLING INSTALLATION D 336 & 337 ONLY | N/P | |
| - 21 | 1470219-1 | SCOOP ---------- | 2 | |
| - 22 | 0770641-1 | ADAPTER ASSY ---------- | 2 | |
| - 23 | S1053E7T | HOSE-----3 FEET REQD EACH SIDE ---------- ATTACHING PARTS | 6FT | |
| - 24 | NAS397-16 | CLAMP ---------- | 4 | |
| - 25 | AN742D16 | CLAMP 336 ONLY ---------- | 2 | |
| - 26 | 1470064-4 | CLIP-----336 ONLY ---------- | 1 | |
| - 27 | 1470064-1 | CLIP-----336 ONLY ---------- | 1 | |
| - 28 | AN520-10R8 | SCREW 336 ONLY ---------- | 2 | |
| | MS20365-1032C | NUT 336 ONLY ----------<br>---*--- | 2 | |
| - 29 | 1470220-1 | PLENUM CHAMBER ASSY-R.H.---------- ATTACHING PARTS | 1 | |
| - 30 | 1470220-4 | SUPPORT ANGLE ---------- | 1 | |
| | S1021Z6-8 | SCREW ---------- | 1 | |
| - 31 | 1470222-1 | CLIP-SPRING WHEN LESS THAN THREE RADIOS ARE STACKED, USE ITEM 12 IN PLACE OF ITEM 31.<br>---*--- | 2 | |

CONTINUED ON NEXT PAGE

| FIGURE AND INDEX NO. | PART NUMBER | DESCRIPTION<br>1 2 3 4 5 6 7 | UNITS PER ASSY | USABLE ON CODE |
|---|---|---|---|---|
| 10-1- 32 | 1470220-8 | PLENUM CHAMBER ASSY-L.H.----------<br>ATTACHING PARTS | 1 | |
| - 33 | 1470220-5 | SUPPORT ANGLE ---------- | 1 | |
| - 34 | S1021Z6-8 | SCREW ----------<br>---*--- | 1 | |
| | | TSO RADIO COOLING INSTALLATION E REFER TO INSTL G ----<br>FOR CESSNA 500 TSO INSTALLATIONS 336 | N/P | |
| - 35 | 1470219-1 | SCOOP ---------- | 2 | |
| - 36 | 0770641-1 | ADAPTER ASSY ---------- | 2 | |
| - 37 | S1053E7T | HOSE-----3 FEET REQD EACH SIDE ----------<br>ATTACHING PARTS | 6FT | |
| - 38 | NAS397-16 | CLAMP ---------- | 4 | |
| - 39 | AN742D16 | CLAMP ---------- | 2 | |
| - 40 | 1470064-4 | CLIP---------- | 1 | |
| - 41 | 1470064-1 | CLIP---------- | 1 | |
| - 42 | AN520-10R8 | SCREW ---------- | 2 | |
| | MS20365-1032C | NUT ----------<br>---*--- | 2 | |
| - 43 | 1470218-1 | PLENUM CHAMBER-----MOUNTS ON TOP OF RADIOS AND CONNECTS TO R.H. SCOOP<br>ATTACHING PARTS | 1 | |
| - 44 | 0770643-1 | SPRING ----------<br>---*--- | 4 | |
| - 45 | 1470215-1 | PLENUM CHAMBER-----MOUNTS ON BOTTOM OF RADIOS ---------<br>AND CONNECTS TO L.H. SCOOP<br>ATTACHING PARTS | 1 | |
| - 46 | 0770643-1 | SPRING ----------<br>---*--- | 4 | |
| | | TSO -CESSNA 500 SERIES- RADIO COOLING INSTALLATION F ----<br>USED ONLY WHEN 1965 & ON CESSNA 500 RADIOS ARE INSTALLED - REFER TO SECTION 2 FOR REPLACEMENT PART NUMBER OF CESSNA 500 MOUNTINGS 1965 & ON MODELS 180, 182, 185, P206, U206 & 210 ONLY | N/P | |
| - 47 | 1470219-1 | SCOOP ---------- | 2 | |
| - 48 | 0770641-1 | ADAPTER ASSY ---------- | 2 | |
| - 49 | S1053E7T | HOSE-----3 FEET REQD EACH SIDE ----------<br>ATTACHING PARTS | 6FT | |
| - 50 | NAS397-16 | CLAMP ----------<br>---*--- | 4 | |
| | | TSO -CESSNA 500 SERIES- RADIO COOLING INSTALLATION G ----<br>USED ONLY WHEN 1965 & ON CESSNA 500 RADIOS ARE INSTALLED - REFER TO SECTION 2 FOR REPLACEMENT PART NUMBER OF CESSNA 500 MOUNTINGS 1965 & ON MODEL 337 | | |
| - 51 | 1470219-1 | SCOOP ---------- | 2 | |
| - 52 | 0770641-1 | ADAPTER ASSY ---------- | 2 | |
| - 53 | S1053E7T | HOSE-----3 FEET REQD EACH SIDE ----------<br>ATTACHING PARTS | 6FT | |
| - 54 | NAS397-16 | CLAMP ---------- | 4 | |
| - 55 | AN742D16 | CLAMP SOME EARLY MODELS ONLY ---------- | 2 | |
| - 56 | S1021Z8-8 | SCREW SOME EARLY MODELS ONLY ---------- | 2 | |
| - 57 | NAS446-4 | NUT SOME EARLY MODELS ONLY ----------<br>---*--- | 2 | |
| | | RADIO COOLING INSTALLATION H USED ONLY TO PROVIDE ----<br>RADIO COOLING FOR RIGHT HAND LOCATED KING RADIOS WHEN A FULL CENTER STACK HAS BEEN INSTALLED ALL MODELS | N/P | |
| - 58 | 0770729-1 | TEE ADAPTER ASSY ----------<br>ATTACHING PARTS | 1 | |
| - 59 | NAS397-14 | CLAMP ----------<br>---*--- | 2 | |
| - 60 | 150-0038-00 | DUCTING KG-----SUPPLIED WITH KING RADIO ONLY--------- | REF | |

## MODELS 336 & 337 ONLY

### RHEOSTAT CHART FOR STANDARD FLOOD LIGHT DIMMING

INSTRUCTIONS

1. The following tables are provided to determine proper resistance value and the vendor part number of the rheostat used for standard dimming of flood lights, radio dial lights, and flap indicator lights.

2. Tables 1 and 2 are used in calculating total lamp load (amps). The total current (amps) compared to table 3 will determine proper resistance and vendor part number of dimming device.

3. Refer to Figure 99 of 336 Parts Catalog or Figure 124 of 337 Parts Catalog for installation.

| RADIO EQUIPMENT | DIAL LT. CURRENT |
|---|---|
| CESSNA | |
| RT-302 | .08 |
| RT-302G | .05 |
| RT-317A | .16 |
| RT-317G | .03 |
| RT-318A | .17 |
| RT-318G | .05 |
| RT-319A | .08 |
| RT-319G | .05 |
| 513A | .05 |
| 514A | .14 |
| 514R | .05 |
| 515R | .06 |
| 521A | .04 |
| 524A | .06 |
| 525A | .05 |
| NAV-O-MATICS | |
| 200 | .04 |
| 300 | .04 |
| 400 | .05 |
| KING | |
| KN-60 | .08 |
| KX-100 | .34 |
| KX-110 | .34 |
| KX-120 | .34 |
| KX-130 | .34 |
| KX-150 | .08 |
| KX-160 | .16 |
| BENDIX (Formerly MOTOROLA) | |
| ADF-T12B | .17 |
| ADF-T12C | .17 |
| M-135 | .34 |
| 5613A | .17 |
| NARCO | |
| MARK V | .24 |
| MARK VII | .04 |
| MARK X | .08 |
| MARK XII | .12 |
| UDI-2 | .08 |
| PANTRONICS | |
| DX10-DA | .12 |
| SUNAIR | |
| T-10R | .04 |
| T-5RA | .04 |

TABLE 1.

| INSTRUMENT EQUIPMENT | DIAL LT. CURRENT |
|---|---|
| FLOOD LTS. | .68 |
| *FLAP POS. IND. | .17 |
| **FLAP POS. IND. | .04 |

TABLE 2.

*(SERIAL 336-0001 THRU 336-0175)
**(SERIAL 336-0176 THRU 336-0195 AND SERIAL 337-0001 THRU 337-0239)

| DIAL LT. AMPS (TOTAL) | RESISTANCE (RHEO) | WATTAGE (RHEO) | VENDOR NUMBER (TRU-OHM) |
|---|---|---|---|
| .68 - .73 | 50 | 25 | R-25-50-RS34-RS |
| .74 - .84 | 35 | 25 | R-25-35-RS34-RS |
| .86 - 1.19 | 35 | 50 | R-50-35-RS34-RS |
| 1.20 - 1.50 | 22 | 50 | R-50-22-RS34-RS |

TABLE 3.

EXAMPLE

RT-317A---------- .16 (Ref. Table 1.)
R-318A---------- .17 (Ref. Table 1.)
FLOOD LTS---------- .68 (Ref. Table 2.)
FLAP POS. IND.--------- .17 (Ref. Table 2.)
TOTAL 1.18 AMPS

1.18 AMPS WILL REQUIRE VENDOR PART NUMBER R-50-35-RS34-RS (Ref. Table 3).

Figure 10-2. Rheostat Chart for Standard Flood Light Dimming

# MODELS 336 & 337 ONLY

## DROPPING RESISTOR CHARTS FOR OPTIONAL POST LIGHTING

### INSTRUCTIONS

1. Three tables are provided to determine the proper resistance value and vendor part number of dropping resistors used for optional post lighting and radio dial lights.
2. Use Tables 1 and 2, to calculate total lamp load (AMPS). Compare the total current (AMPS) with Table 3 to arrive at proper resistance and vendor part number to be used.

### NOTES

1. The 337 models do not use dropping resistors, but do use two (2) R-25-35-RS34-RS (TRTA) rheostats for engine instruments and switch panel lighting.
2. Refer to Fig. 99 of 336 Parts Catalog & Fig. 124 of 337 Parts Catalog for installation.

TABLE 1.

| RADIO EQUIPMENT | DIAL LT. CURRENT |
|---|---|
| CESSNA | |
| RT-302 | .08 |
| RT-302G | .05 |
| RT-317A | .16 |
| RT-317G | .03 |
| RT-318A | .17 |
| RT-318G | .05 |
| RT-319A | .08 |
| RT-319G | .05 |
| 513A | .05 |
| 514A | .14 |
| 514R | .05 |
| 515R | .06 |
| 521A | .04 |
| 524A | .06 |
| 525A | .05 |
| NAV-O-MATICS | |
| 200 | .04 |
| 300 | .04 |
| 400 | .05 |
| KING | |
| KN-60 | .08 |
| KX-100 | .34 |
| KX-110 | .34 |
| KX-120 | .34 |
| KX-130 | .34 |
| KX-150 | .08 |
| KX-160 | .16 |
| BENDIX (Formerly MOTOROLA) | |
| ADF-T12B | .17 |
| ADF-T12C | .17 |
| M-135 | .34 |
| 5613A | .17 |
| NARCO | |
| MARK V | .24 |
| MARK VII | .04 |
| MARK X | .08 |
| MARK XII | .12 |
| UDI-2 | .08 |
| PANTRONICS | |
| DX10-DA | .12 |
| SUNAIR | |
| T-10R | .04 |
| T-5RA | .04 |

TABLE 2.

| INSTRUMENT | LIGHT CURRENT |
|---|---|
| AUDIO SW. PNL. (OPT) | .08 |
| OMNI IND (OPT) | .08 |
| ADF IND (OPT) | .08 |
| AIR SPEED | .04 |
| ALTIMETER | .04 |
| TURN & BANK | .04 |
| CLOCK | .04 |
| VERT. SPEED | .04 |
| GYRO HORIZ. (OPT) | .16 |
| DIR. GYRO (OPT) | .08 |
| *FLAP POS. IND. | .17 |
| **FLAP POS. IND. | .04 |

*(SERIAL 336-0001 THRU 336-0175)
**(SERIAL 336-0176 THRU 336-0195 AND SERIAL 337-0001 THRU 337-0239)

TABLE 3.

| DIAL LT. AMPS (TOTAL) | RES. | VENDOR NUMBER (TRU-OHM) |
|---|---|---|
| 1.49 - 1.07 | 25 | X12869 |
| 1.065 - .755 | 35 | X12870 |
| .735 - .529 | 50 | X12871 |

EXAMPLE

RT-317A ---------- .16 (REF TABLE 1)
R-318A ---------- .17 (REF TABLE 1)
AUDIO SW. PNL. (OPT) -- .08 (REF TABLE 2)
OMNI IND. (OPT) -------- .08 (REF TABLE 2)
AIR SPEED ---------- .04 (REF TABLE 2)
ALTIMETER ---------- .04 (REF TABLE 2)
TURN & BANK ---------- .04 (REF TABLE 2)
CLOCK ---------- .04 (REF TABLE 2)
VERT. SPEED ---------- .04 (REF TABLE 2)
FLAP POS. IND. ---------- .17 (REF TABLE 2)
TOTAL ---------- .86 AMPS

NOTE: .86 AMPS WILL REQUIRE VENDOR PART NUMBER X12870. (REF. TABLE 3).

Figure 10-3. Dropping Resistor & Rheostat Chart

RADIO NOISE FILTER INSTALLATIONS

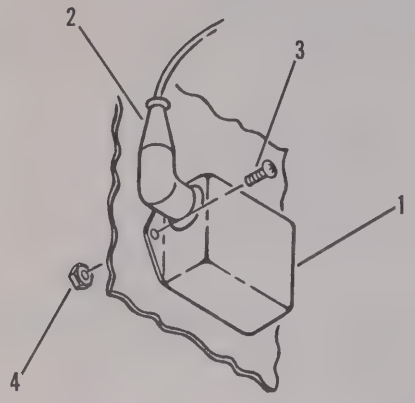


INSTALLATION **A**

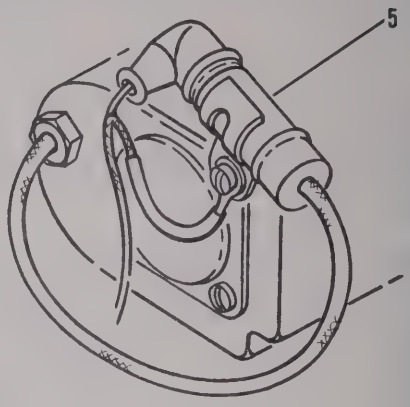


INSTALLATION **B**

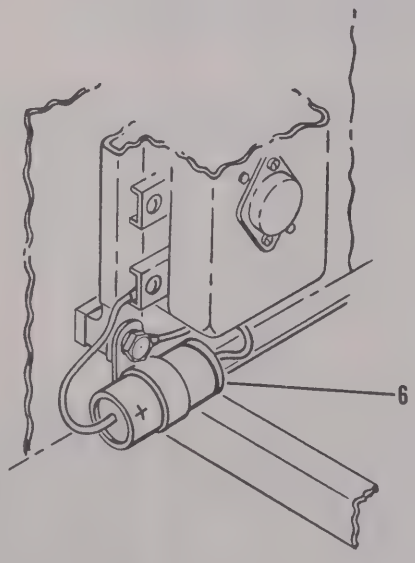


INSTALLATION **C**

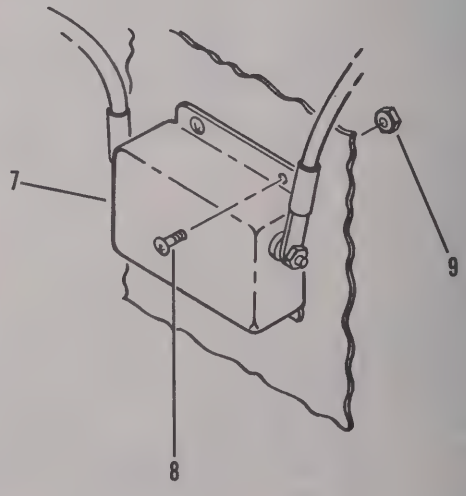


INSTALLATION **D**

Figure 10-5. Radio Noise Filter Installations - Sheet 1

RADIO NOISE FILTER INSTALLATIONS

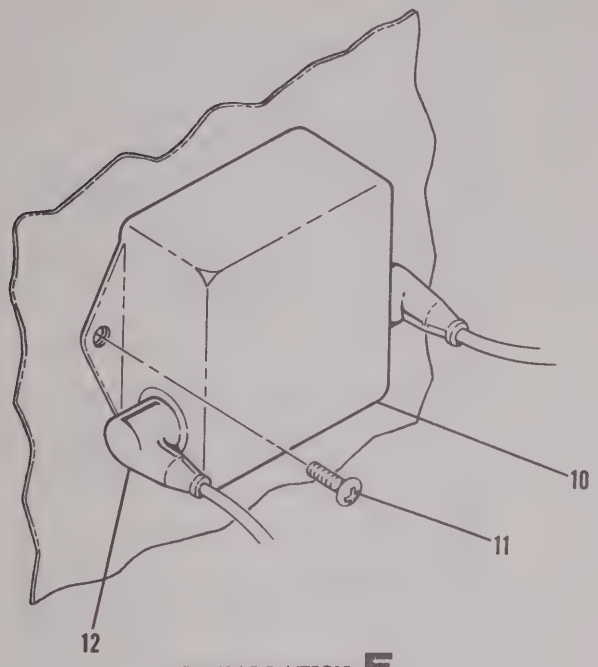


INSTALLATION **E**

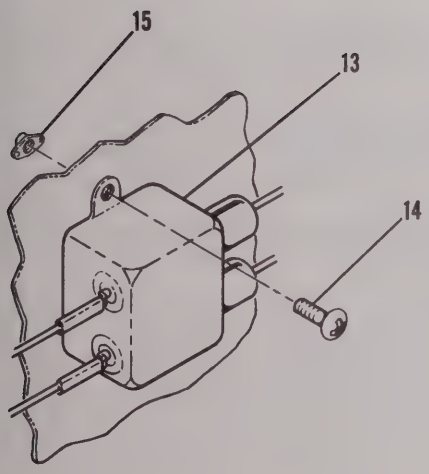


INSTALLATION **F**

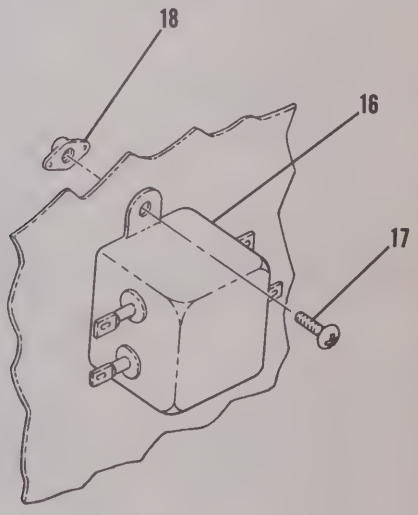


INSTALLATION **G**

Figure 10-5. Radio Noise Filter Installations - Sheet 2

| FIGURE AND INDEX NO. | PART NUMBER | DESCRIPTION<br>1 2 3 4 5 6 7 | UNITS PER ASSY | USABLE ON CODE |
|---|---|---|---|---|
| 10-5- | | RADIO NOISE FILTER INSTALLATIONS---------- | N/P | |
| | | INSTALLATION A - GENERATOR OR ALTERNATOR FILTER --------- | N/P | |
| | | STANDARD EQUIPMENT ON AIRCRAFT | | |
| - 1 | 0770038-2 | CONDENSER - RADIO NOISE ----WIRES NOT FURNISHED 2---- | 1 | |
| | | REQD FOR 336 & 337 | | |
| - 2 | NAS446-4-3 | NIPPLE ---------- | 1 | |
| | | ATTACHING PARTS | | |
| - 3 | AN515-8R8 | SCREW ---------- | 2 | |
| - 4 | MS20365-832C | NUT SOME AIRCRAFT ---------- | 2 | |
| | | ---*--- | | |
| | | INSTALLATION B - MAGNETO FILTER USED WITH BENDIX ---- | N/P | |
| | | MAGNETOS ONLY 150, 180 & 182 THRU EARLY 1966 MODELS | | |
| | | & ALL 336 AND 337 MODELS ONLY | | |
| - 5 | 94B016-01 | FILTER-MAGNETO-----4 REQD FOR 336 & 337 ---------- | 2 | |
| | | INSTALLATION C - VOLTAGE REGULATOR FILTER 336 --------- | N/P | |
| | | & 337 ONLY | | |
| - 6 | TVA1315 | FILTER-VOLTAGE REGULATOR---------- | 2 | |
| | | INSTALLATION D - GENERATOR OR ALTERNATOR FILTER - REPLACES | N/P | |
| | | INSTALLATION A WHEN AN ADF, PANTRONICS OR SUNAIR RADIO | | |
| | | IS INSTALLED ON ALL AIRCRAFT THRU 1965 WHEN EXHAUSTED | | |
| | | USE INSTALLATION E | | |
| - 7 | 14S329 | FILTER - GENERATOR OR ALTERNATOR FILTER WIRES NOT---- | 1 | |
| | | FURNISHED | | |
| | | ATTACHING PARTS | | |
| - 8 | AN515-8R6 | SCREW ---------- | 4 | |
| - 9 | MS20364-832C | NUT ---------- | 4 | |
| | | ---*--- | | |
| | | INSTALLATION E - GENERATOR OR ALTERNATOR FILTER - REPLACES | N/P | |
| | | INSTALLATION D WHICH REPLACES INSTALLATION A WHEN AN ADF | | |
| | | PANTRONICS OR SUNAIR RADIO IS INSTALLED ON ALL AIRCRAFT | | |
| | | 1966 & ON | | |
| - 10 | S1629-1 | FILTER - GENERATOR OR ALTERNATOR FILTER WIRES NOT---- | 1 | |
| | | FURNISHED | | |
| | | ATTACHING PARTS | | |
| - 11 | AN520-10R8 | SCREW ---------- | 2 | |
| | MS20365-1032C | NUT ---------- | 2 | |
| | | ---*--- | | |
| - 12 | S1488-1 | NIPPLE ---------- | 2 | |
| | | INSTALLATION F - COWL FLAP NOISE FILTER - 337 ONLY THRU---- | N/P | |
| | | EARLY 1966 | | |
| - 13 | 40-S-252 | FILTER GLI---------- | 2 | |
| | | ATTACHING PARTS | | |
| - 14 | AN515-6R8 | SCREW ---------- | 4 | |
| - 15 | NAS697A06L | NUTPLATE ---------- | 4 | |
| | | ---*--- | | |
| | | INSTALLATION G - COWL FLAP NOISE FILTER - 337 ONLY--------- | N/P | |
| | | 1966 & ON | | |
| - 16 | A-374A | FILTER CTAT ---------- | 2 | |
| | | ATTACHING PARTS | | |
| - 17 | AN515-6R8 | SCREW ---------- | 4 | |
| - 18 | NAS697A06L | NUTPLATE ---------- | 4 | |
| | | ---*--- | | |

# SECTION XI

# ELECTRONIC LOADING CHARTS

TABLE OF CONTENTS


| Figure | | Page |
|---|---|---|
| 11-1 | Model 150 - 1963 Models Only | 11-2 |
| 11-1 | Model 150 - 1964 Models thru 1965 | 11-3 |
| 11-1 | Model 150 - 1966 Models and On | 11-4 |
| 11-2 | Models 172 & P172 - 1963 Models Only | 11-5 |
| 11-2 | Model 172 - 1964 Models and On | 11-6 |
| 11-3 | Models 180 & 185 | 11-8 |
| 11-4 | Model 182 - Standard Locations | 11-10 |
| 11-5 | Model 182 - Auxiliary Locations | 11-12 |
| 11-6 | Models 205, 206, P206, U206, TP206, & TU206 - Auxiliary Locations | 11-13 |
| 11-7 | Model 210 - 1963 Models Only | 11-14 |
| 11-7 | Model 210 - 1964 Models and On | 11-15 |
| 11-8 | Model 336 - Auxiliary Locations | 11-18 |


NOTE: For Standard Locations of Radio Equipment in 205, 206, P206, U206, TP206, TU206, 336 & 337 Aircraft, Refer to Applicable Radio Installations.

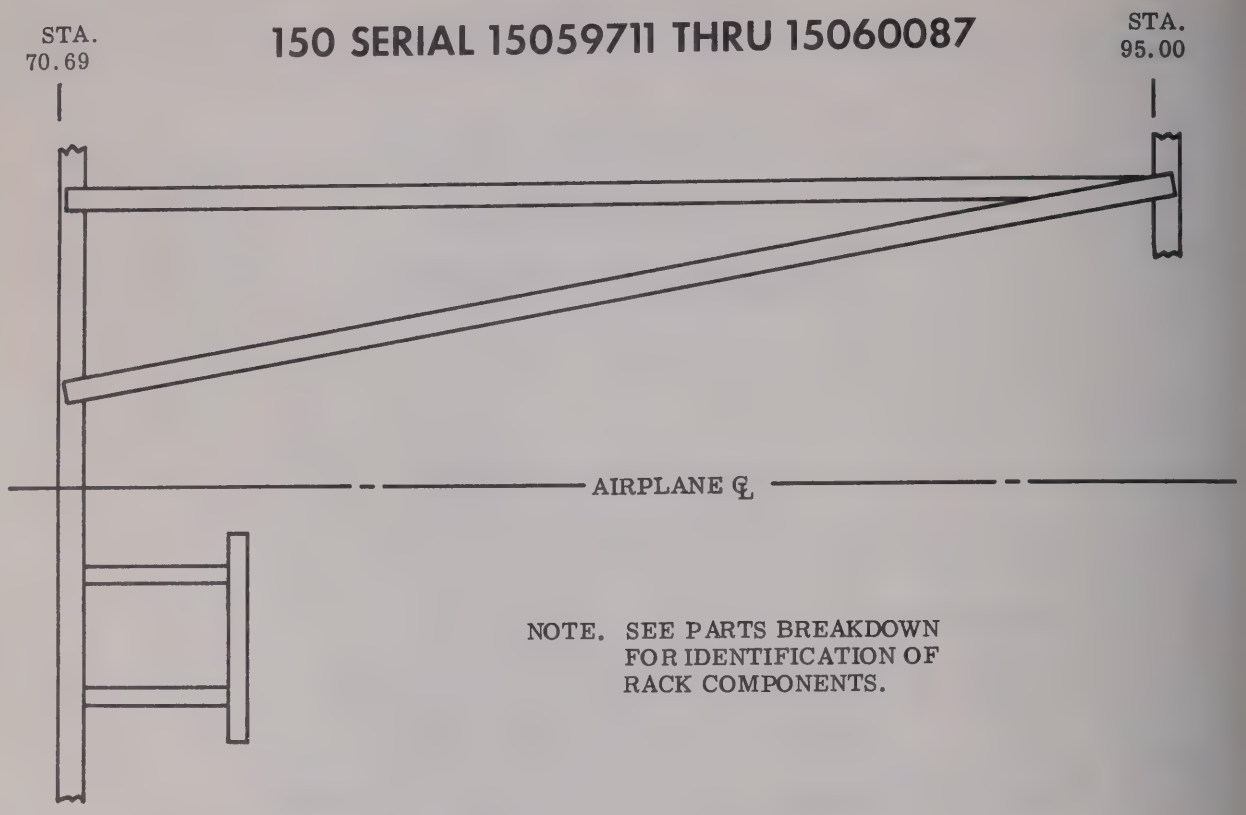


| EQUIPMENT | FWD INBD ATTACH POINT | | AFT INBD ATTACH POINT | | COMPONENT WEIGHT | LOCATION |
|---|---|---|---|---|---|---|
| | B. L. | STA. | B. L. | STA. | | |
| NARCO | | | | | | |
| V12MP-2A POWER UNIT | 5.9 (R) | 75.2 | 7.1 (R) | 81.8 | 4.0# | Position # 1 |

Figure 11-1. Electronic Loading Chart - Model 150 (Sheet 1 of 3)

NOTE: SEE PARTS BREAKDOWN FOR IDENTIFICATION OF RACK COMPONENTS.

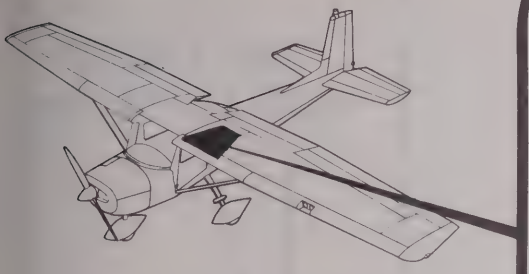

**150 SERIAL**

**15060088 THRU 15061532**

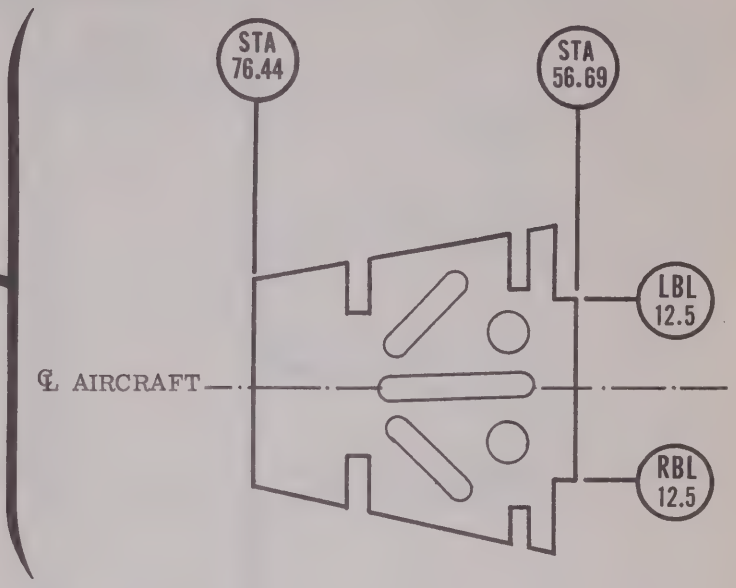


| EQUIPMENT | FWD INBD ATTACH POINT | | AFT INBD ATTACH POINT | | COMPONENT WEIGHT | LOCATION |
|---|---|---|---|---|---|---|
| | B. L. | STA. | B. L. | STA. | | |
| KING | | | | | | |
| KS-501A POWER SUPPLY | 5.1 (R) | 72.00 | 5.1 (R) | 74.56 | 3.2# | Position # 1 |
| NARCO | | | | | | |
| T-12MP-12 POWER SUPPLY | 3.5 (R) | 71.89 | 3.5 (R) | 75.64 | 4.3# | Position # 1 |

Figure 11-1. Electronic Loading Chart - Model 150 (Sheet 2 of 3)

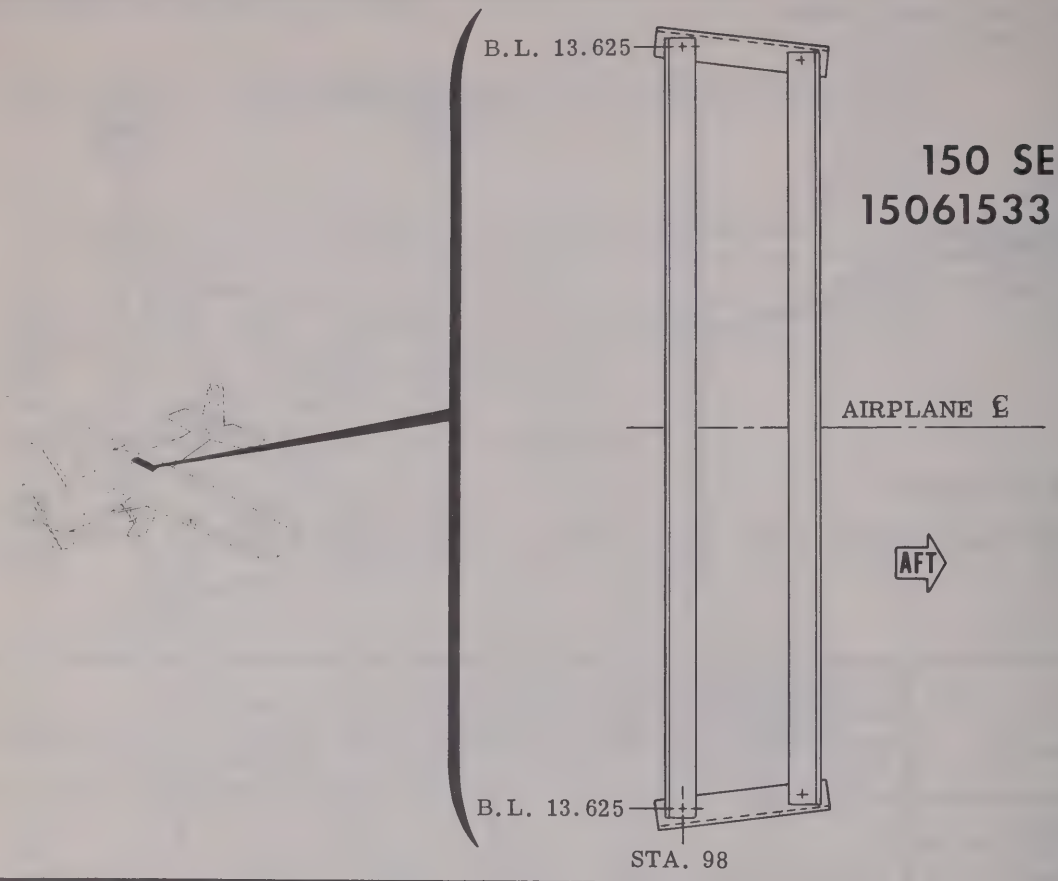


| EQUIPMENT | FWD INBD ATTACH POINT | | COMPONENT WEIGHT | LOCATION |
|---|---|---|---|---|
| | B. L. | STA. | | |
| CESSNA | | | | |
| RA-525A ACCESSORY UNIT | 8.59 (R & L) | 98.0 | 4.9 | Position # 1 |
| KING | | | | |
| KS-501A POWER SUPPLY | 1.81 (L) | 98.0 | 3.5 | Position # 1 |
| KS-505 POWER SUPPLY | 1.81 (R) | 98.0 | 4.0 | Position # 1 |
| KS-505 POWER SUPPLY | 1.81 (L) | 98.0 | 4.0 | Position # 2 |

Figure 11-1. Electronic Loading Chart - Model 150 (Sheet 3 of 3)

NOTE. SEE PARTS CATALOG FOR PART NUMBER OF FLOORBOARD.

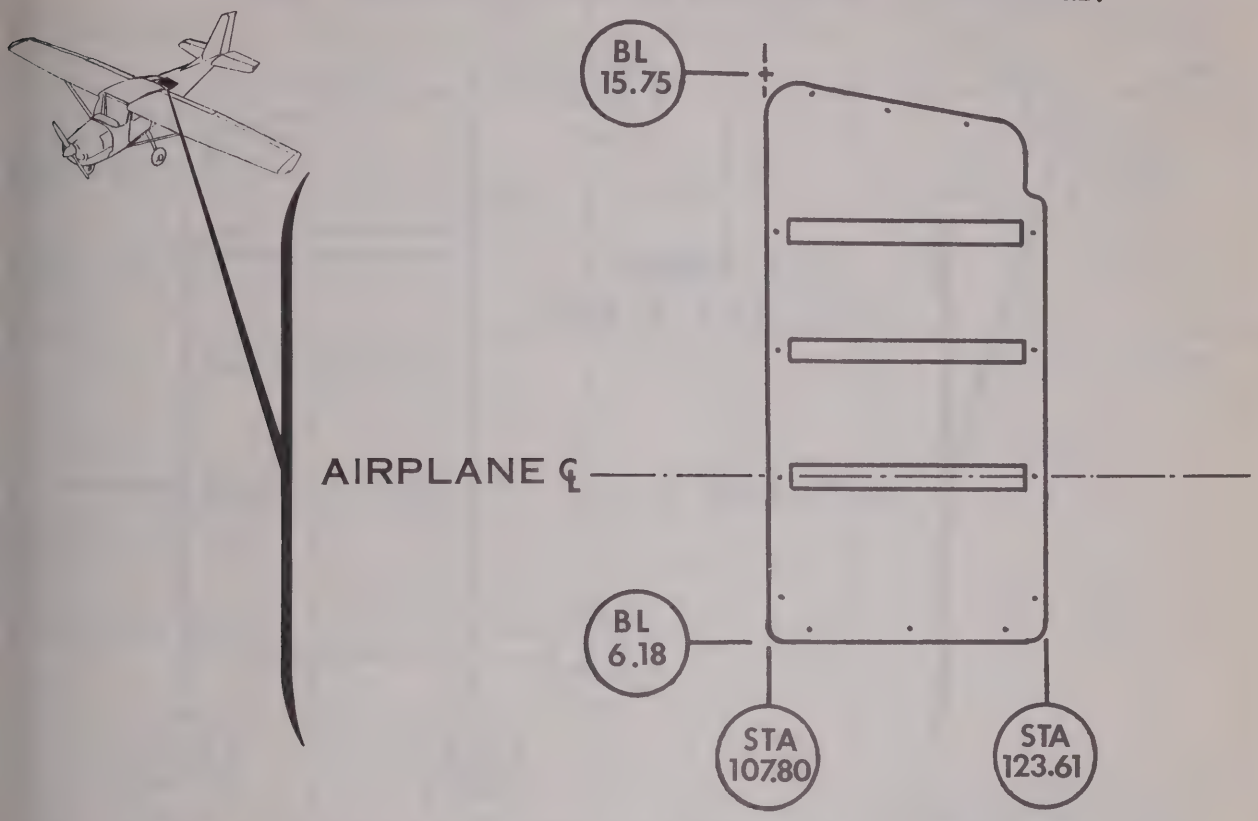


## 172 SERIAL 17249545 THRU 17250572
## P172 SERIAL P17257120 THRU P17257188

| EQUIPMENT | FWD INBD ATTACH POINT | | AFT INBD ATTACH POINT | | COMPONENT WEIGHT | LOCATION |
|---|---|---|---|---|---|---|
| | B. L. | STA. | B. L. | STA. | | |
| CESSNA (NAV/COM) | | | | | | |
| ACCESSORY UNIT 513A | 9.1 (R) | 181.2 | 9.1 (R) | 192.6 | 6.7# | Position # 1 |
| KING | | | | | | |
| KS-501A POWER SUPPLY | 8.1 (R) | 109.2 | 8.1 (R) | 111.8 | 3.22# | Position # 1 |
| NARCO | | | | | | |
| V12MP-2A POWER UNIT | 7.0 (R) | 109.0 | 7.0 (R) | 112.7 | 7.12# | Position # 1 |
| T12MP-7 MODULATOR POWER SUPPLY | 6.2 (R) | 118.5 | 6.2 (R) | 122.3 | 4.0# | Position # 1 |

Figure 11-2. Electronic Loading Chart - Model 172 & P172 (Sheet 1 of 3)

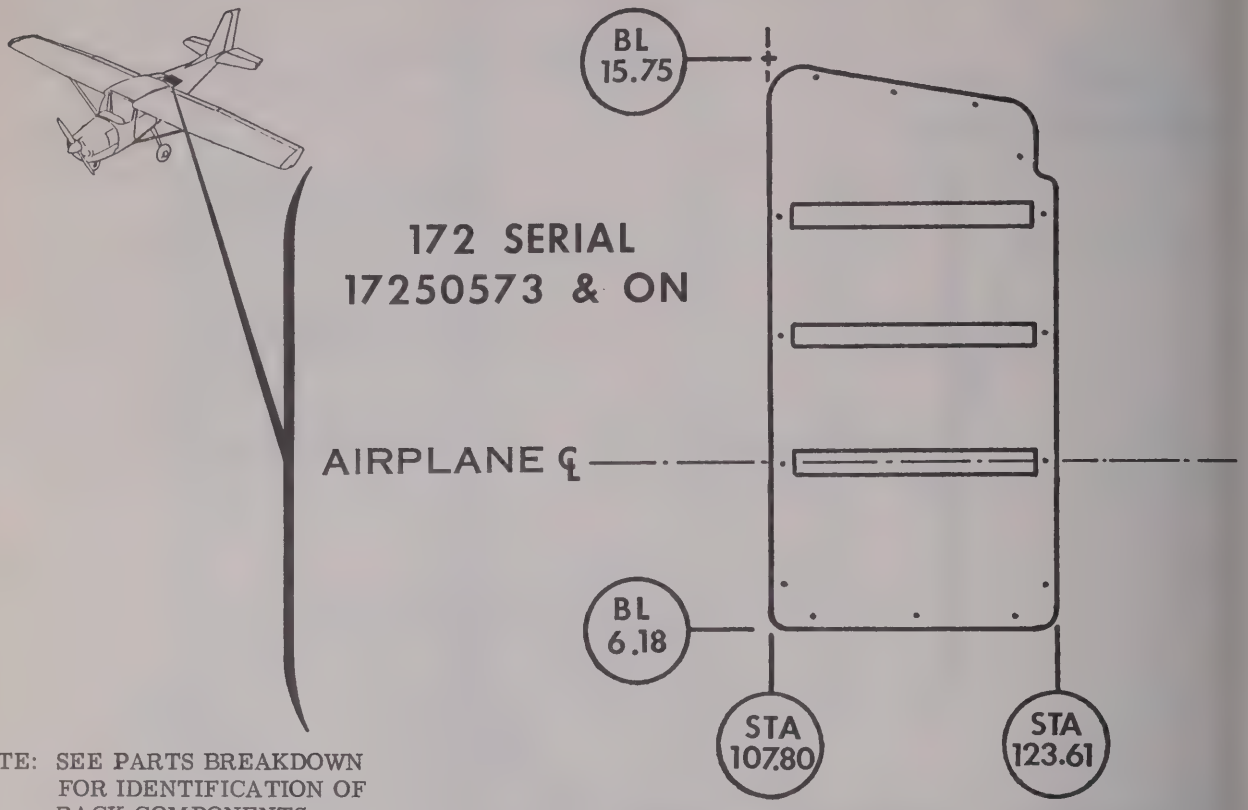


NOTE: SEE PARTS BREAKDOWN FOR IDENTIFICATION OF RACK COMPONENTS.

| EQUIPMENT | FWD INBD ATTACH POINT | | AFT INBD ATTACH POINT | | COMPONENT WEIGHT | LOCATION |
|---|---|---|---|---|---|---|
| | B. L. | STA. | B. L. | STA. | | |
| CESSNA | | | | | | |
| RA-525A-1 ACCESSORY UNIT | 8.0 (R) | 110.0 | 18.0 (R) | 114.25 | 5.7# | Position # 1 |
| KING | | | | | | |
| KS-501A POWER SUPPLY | 9.3 (R) | 111.19 | 9.3 (R) | 117.07 | 3.2# | Position # 1 |
| KS-501A POWER SUPPLY | 5.6 (R) | 111.19 | 5.6 (R) | 117.07 | 3.2# | Position # 2 |
| KS-505 POWER SUPPLY | 1.7 (R) | 112.1 | 1.7 (R) | 118.8 | 4.0# | Position # 1 |
| KS-505 POWER SUPPLY | 7.8 (R) | 112.1 | 7.8 (R) | 118.8 | 4.0# | Position # 2 |

Figure 11-2. Electronic Loading Chart - Model 172 & P172 (Sheet 2 of 3)

| EQUIPMENT | FWD INBD ATTACH POINT | | AFT INBD ATTACH POINT | | COMPONENT WEIGHT | LOCATION |
|---|---|---|---|---|---|---|
| | B. L. | STA. | B. L. | STA. | | |
| NARCO | | | | | | |
| T12MP-12 POWER SUPPLY | 8.5 (R) | 111.62 | 8.5 (R) | 117.12 | 4.3# | Position # 1 |
| T12MP-12 POWER SUPPLY | 3.0 (R) | 111.62 | 3.0 (R) | 117.12 | 4.3# | Position # 2 |
| UGR-1A | | 111.00 | | 120.9 | 6.7# | Note: Mounted on ℄ of Aircraft. |
| PANTRONICS | | | | | | |
| DX10PS POWER SUPPLY | 5.5 (R) | 111.19 | 5.5 (R) | 120.44 | 4.9# | Position # 1 |
| 39033 POWER SUPPLY | 6.5 (R) | 111.19 | 6.5 (R) | 120.44 | 9.4# | Position # 1 |

Figure 11-2. Electronic Loading Chart - Model 172 & P172 (Sheet 3 of 3)

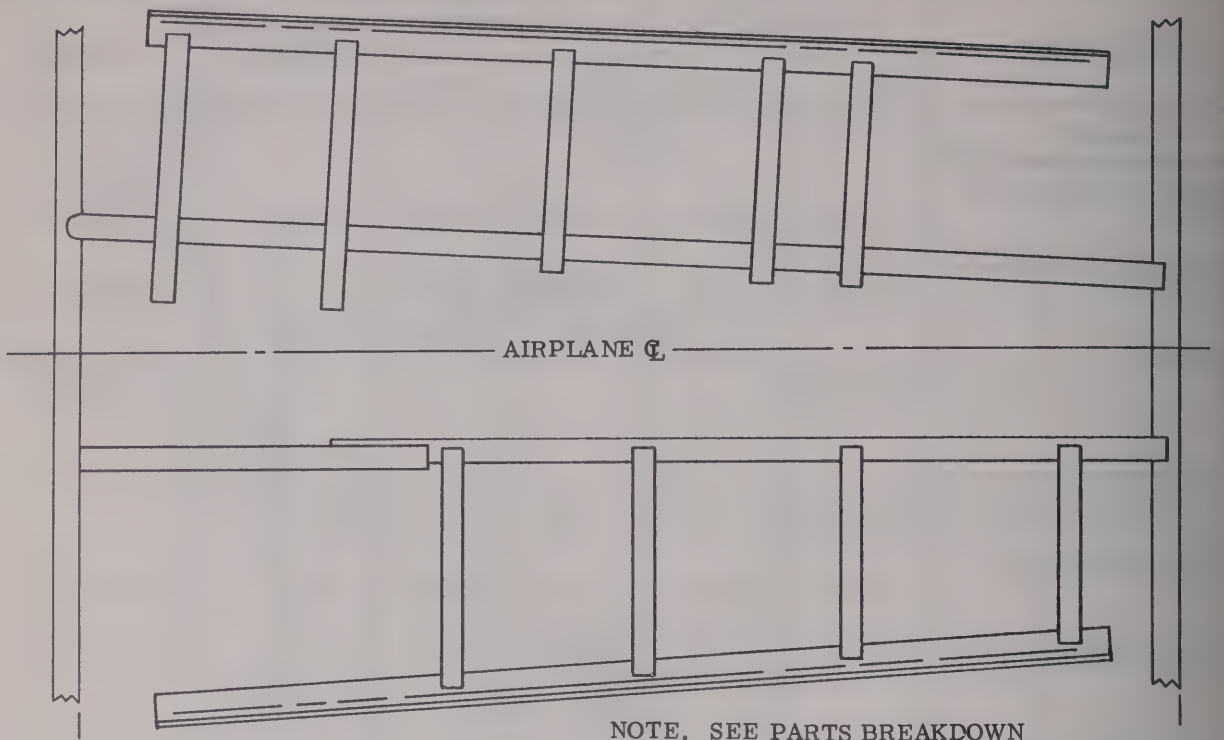


## 185 SERIAL 185-0498 & ON
## 180 SERIAL 18051184 & ON

| EQUIPMENT | FWD INBD ATTACH POINT | | AFT INBD ATTACH POINT | | COMPONENT WEIGHT | LOCATION |
|---|---|---|---|---|---|---|
| | B. L. | STA. | B. L. | STA. | | |
| CESSNA | | | | | | |
| B-317A CONVERTER | 10.2 (R) | 112.8 | 9.4 (R) | 119.2 | 3.8# | Position # 1 |
| B-317A CONVERTER | 4.9 (L) | 132.2 | 4.3 (L) | 135.5 | 3.8# | Position # 2 |
| DV-302A DYNAVERTER | 5.0 (R) | 130.0 | 4.0 (R) | 138.2 | 4.4# | Position # 1 |
| DV-302A DYNAVERTER | 7.2 (R) | 116.6 | 6.3 (R) | 122.8 | 4.4# | Position # 2 |
| DV-318A1 DYNAVERTER | 8.8 (R) | 115.2 | 8.3 (R) | 126.2 | 3.6# | Position # 1 |
| DV-318A1 DYNAVERTER | 7.2 (R) | 116.6 | 6.3 (R) | 122.8 | 3.6# | Position # 2 |
| DV-319B DYNAVERTER | 6.0 (L) | 120.5 | 5.6 (R) | 124.0 | 4.0# | Position # 1 |
| RA-525A ACCESSORY UNIT | 6.1 (R) | 114.0 | 5.7 (R) | 122.0 | 5.2# | Position # 1 |
| DV-317B1 DYNAVERTER | 10.2 (R) | 112.8 | 9.4 (R) | 119.2 | 4.6# | Position # 1 |
| 513A ACCESSORY UNIT | 2.3 (R) | 113.3 | 1.7 (R) | 124.6 | 6.7# | Position # 1 |

Figure 11-3. Electronic Loading Chart - Models 180 & 185 (Sheet 1 of 2)

| EQUIPMENT | FWD INBD ATTACH POINT | | AFT INBD ATTACH POINT | | COMPONENT WEIGHT | LOCATION |
|---|---|---|---|---|---|---|
| | B. L. | STA. | B. L. | STA. | | |
| KING | | | | | | |
| KS-501A POWER SUPPLY | 6.4 (R) | 122.1 | 6.1 (R) | 124.7 | 3.22# | Pos. #1 (Thru 1964) |
| KS-501A POWER SUPPLY | 7.9 (R) | 109.3 | 7.6 (R) | 119.9 | 3.22# | Pos. #2 (Thru 1964) |
| KS-501A POWER SUPPLY | 7.3 (R) | 112.9 | 6.9 (R) | 113.4 | 3.22# | Pos. #1 (1965 & on) |
| KS-501A POWER SUPPLY | 6.5 (R) | 117.3 | 6.2 (R) | 120.8 | 3.22# | Pos. #2 (1965 & on) |
| KS-505 POWER SUPPLY | 7.2 (R) | 113.5 | 6.2 (R) | 120.3 | 4.0# | Pos. #1 |
| NARCO | | | | | | |
| V12MP-2A POWER UNIT | 7.3 (R) | 109.3 | 6.8 (R) | 113.1 | 7.12# | Position # 1 |
| V12MP-2A POWER UNIT | 6.4 (R) | 117.7 | 6.0 (R) | 121.3 | 7.12# | Position # 2 |
| V12MP-2A POWER UNIT | 6.1 (R) | 126.4 | 5.4 (R) | 133.6 | 7.12# | Position # 3 |
| T12MP-7 MODULATOR POWER SUPPLY | 7.6 (R) | 116.9 | 7.1 (R) | 120.9 | 4.0# | Position # 1 |
| T12MP-7 MODULATOR POWER SUPPLY | 6.8 (L) | 120.9 | 6.8 (L) | 124.7 | 4.0# | Position # 2 |
| T12MP-7 MODULATOR POWER SUPPLY | 8.5 (R) | 109.3 | 8.0 (R) | 113.1 | 4.0# | Position # 3 |
| T12MP-8 MODULATOR POWER SUPPLY | 3.5 (R) | 110.0 | 3.21 (R) | 112.8 | 6.83# | Position # 1 |
| T12MP-8 MODULATOR POWER SUPPLY | 3.1 (R) | 113.5 | 2.84 (R) | 116.3 | 6.83# | Position # 2 |
| T12MP-12 MODULATOR POWER SUPPLY | 7.2 (R) | 112.8 | 6.7 (R) | 116.5 | 4.3# | Position # 1 |
| T12MP-12 MODULATOR POWER SUPPLY | 6.5 (R) | 118.2 | 6.0 (R) | 121.9 | 4.3# | Position # 2 |
| UGR-1A GLIDE SLOPE RECEIVER | 5.3 (R) | 126.7 | 4.0 (R) | 136.5 | 6.7# | Position # 1 |
| PANTRONICS | | | | | | |
| DX10-PS REMOTE UNIT | 7.2 (R) | 113.0 | 6.0 (R) | 122.0 | 4.9# | Position # 1 |
| 39033 REMOTE UNIT | 7.2 (R) | 113.0 | 6.0 (R) | 122.0 | 9.6# | Position # 1 |

Figure 11-3. Electronic Loading Chart - Models 180 & 185 (Sheet 2 of 2)

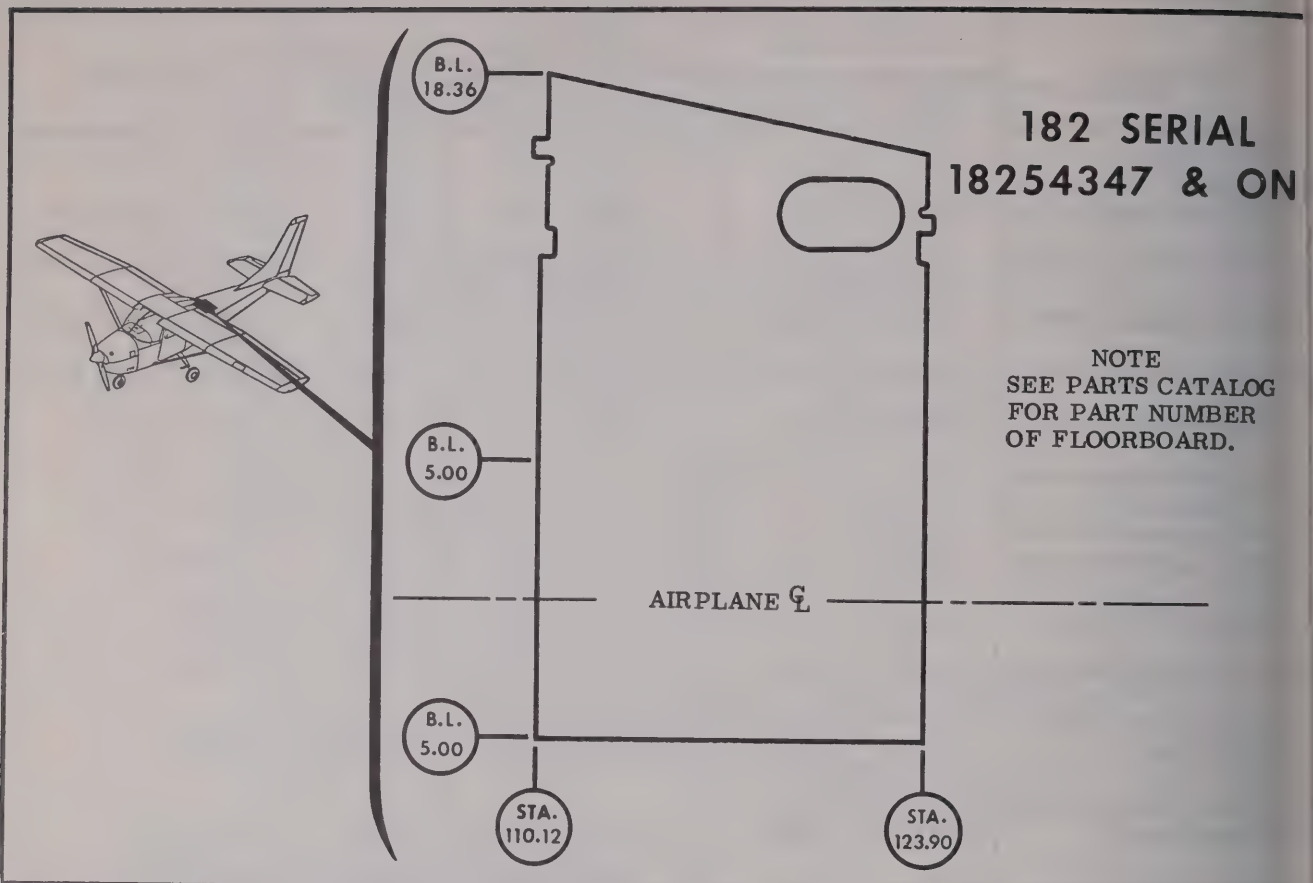


| EQUIPMENT | FWD INBD ATTACH POINT | | AFT INBD ATTACH POINT | | COMPONENT WEIGHT | LOCATION |
|---|---|---|---|---|---|---|
| | B. L. | STA. | B. L. | STA. | | |
| CESSNA | | | | | | |
| B-317 CONVERTER | 1.9 (R) | 112.7 | 1.9 (R) | 120.7 | 3.8# | Position # 1 |
| DV-317 DYNAVERTER | 0.4 (R) | 112.7 | 0.4 (R) | 120.7 | 3.8# | Position # 1 |
| DV-302 DYNAVERTER | 7.5 (R) | 112.7 | 7.5 (R) | 120.7 | 3.8# | Position # 1 |
| DV-318 DYNAVERTER | 12.5 (R) | 112.0 | 12.5 (R) | 117.4 | 4.1# | Pos. #1 (Thru 1964) |
| DV-318 DYNAVERTER | 18.0 (R) | 111.6 | 21.8 (R) | 117.0 | 4.1# | Pos. #1 (1965 & on) |
| 513A ACCESSORY UNIT | .7 (L) | 111.5 | .7 (L) | 122.9 | 6.7# | Position # 1 |
| 513A ACCESSORY UNIT | 3.0 (R) | 111.5 | 3.0 (R) | 122.9 | 6.7# | Position # 1 |
| RA-525A ACCESSORY UNIT | 3.2 (L) | 118.77 | 3.2 (L) | 123.0 | 5.2# | Position # 1 |
| 0770668-1 RELAY ASSY | 11.3 (R) | 121.35 | 11.3 (R) | 123.5 | | Position # 1 |

Figure 11-4. Electronic Loading Chart - Model 182 - Standard Locations (Sheet 1 of 2)

| EQUIPMENT | FWD INBD ATTACH POINT | | AFT INBD ATTACH POINT | | COMPONENT WEIGHT | LOCATION |
|---|---|---|---|---|---|---|
| | B. L. | STA. | B. L. | STA. | | |
| KING | | | | | | |
| KS-501A POWER SUPPLY | 7.6 (R) | 112.1 | 7.6 (R) | 117.7 | 3.22# | Position # 1 |
| KS-501A POWER SUPPLY | 12.4 (R) | 112.1 | 12.4 (R) | 112.1 | 3.22# | Position # 1 |
| KS-505 POWER SUPPLY | 5.1 (R) | 112.1 | 6.6 (R) | 118.8 | 4.0# | Position # 1 |
| KS-505 POWER SUPPLY | 9.1 (R) | 112.1 | 10.6 (R) | 118.8 | 4.0# | Position # 2 |
| NARCO | | | | | | |
| T12MP-2A PWR SUPPLY | 2.2 (R) | 111.5 | 2.2 (R) | 118.1 | 7.12# | Position # 1 |
| T12MP-2A PWR SUPPLY | ℄ | 111.5 | ℄ | 118.1 | 7.12# | Position # 2 |
| T12MP-7 MODULATOR POWER SUPPLY | 12.4 (R) | 112.0 | 12.4 (R) | 116.5 | 4.0# | Position # 1 |
| T12MP-7 MODULATOR POWER SUPPLY | 7.6 (R) | 112.1 | 7.6 (R) | 117.6 | 4.0# | Position # 2 |
| T12MP-8 MODULATOR POWER SUPPLY | 4.8 (L) | 111.6 | 4.8 (L) | 121.2 | 6.83# | Position # 1 |
| T12MP-12 PWR SUPPLY | 7.6 (R) | 112.0 | 11.4 (R) | 117.5 | 4.3# | Position # 1 |
| T12MP-12 PWR SUPPLY | 12.3 (R) | 112.0 | 16.1 (R) | 117.5 | 4.3# | Position # 2 |
| T12RP-9 RANGE POWER UNIT | 4.7 (L) | 111.5 | 4.7 (L) | 121.1 | 6.5# | Position # 1 |
| UGR-1A RECEIVER | 7.5 (R) | 111.1 | 7.5 (R) | 116.7 | 6.7# | Position # 1 (Thru 1964 Only) |
| UGR-1A RECEIVER | 0.8 (R) | 111.3 | 4.7 (L) | 121.3 | 6.7# | Pos. #1 (1965 & on) |
| PANTRONICS | | | | | | |
| DX10-PS POWER SUPPLY | 1.8 (R) | 112.8 | 1.8 (R) | 122.0 | 4.5# | Position # 1 |
| 39033 POWER SUPPLY | 6.8 (R) | 112.3 | 11.8 (R) | 121.6 | 9.6# | Position # 1 |

Figure 11-4. Electronic Loading Chart - Model 182 - Standard Locations (Sheet 2 of 2)

182 AUXILIARY RADIO SHELF

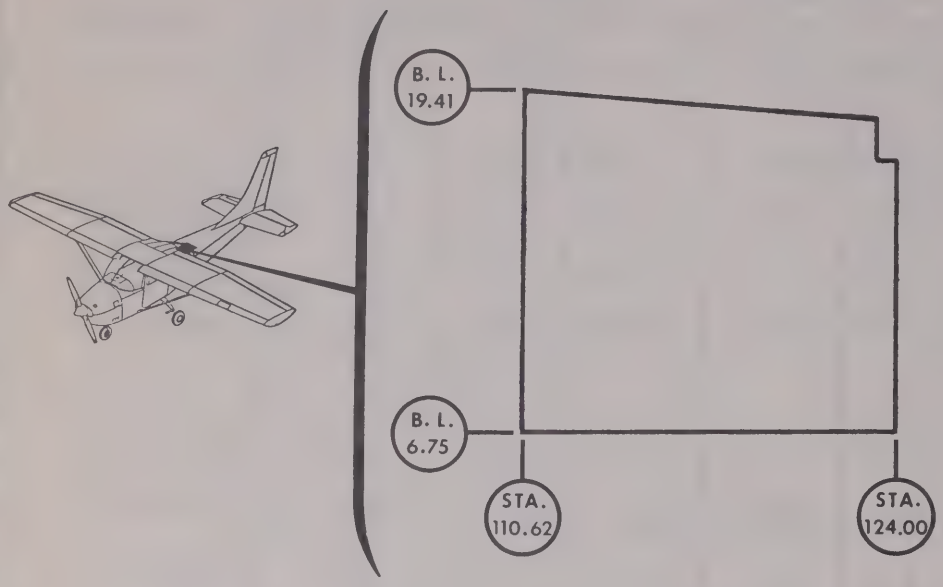


**182 SERIAL 18254347 &ON**

NOTE
REFER TO FIGURE 5-7. FOR INSTALLATION AND PARTS BREAKDOWN.

| EQUIPMENT | FWD INBD ATTACH POINT | | AFT INBD ATTACH POINT | | COMPONENT WEIGHT | LOCATION |
|---|---|---|---|---|---|---|
| | B. L. | STA. | B. L | STA. | | |
| AIRCRAFT RADIO CORP | | | | | | |
| B-317 CONVERTER | 7.7 (R) | 112.3 | 7.7 (R) | 115.6 | 3.8# | Position # 2 |
| DV-319 DYNAVERTER | 7.7 (R) | 118.2 | 7.7 (R) | 114.9 | 3.6# | Position # 2 |
| NARCO | | | | | | |
| T12PR-9 RANGE POWER UNIT | 7.5 (R) | 123.0 | 7.5 (R) | 128.0 | 6.5# | Position # 2 |

Figure 11-5. Electronic Loading Chart - Model 182 - Auxiliary Locations

205, 206, P206, U206, TP206 & TU206 AUXILIARY RADIO SHELF

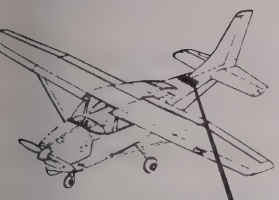

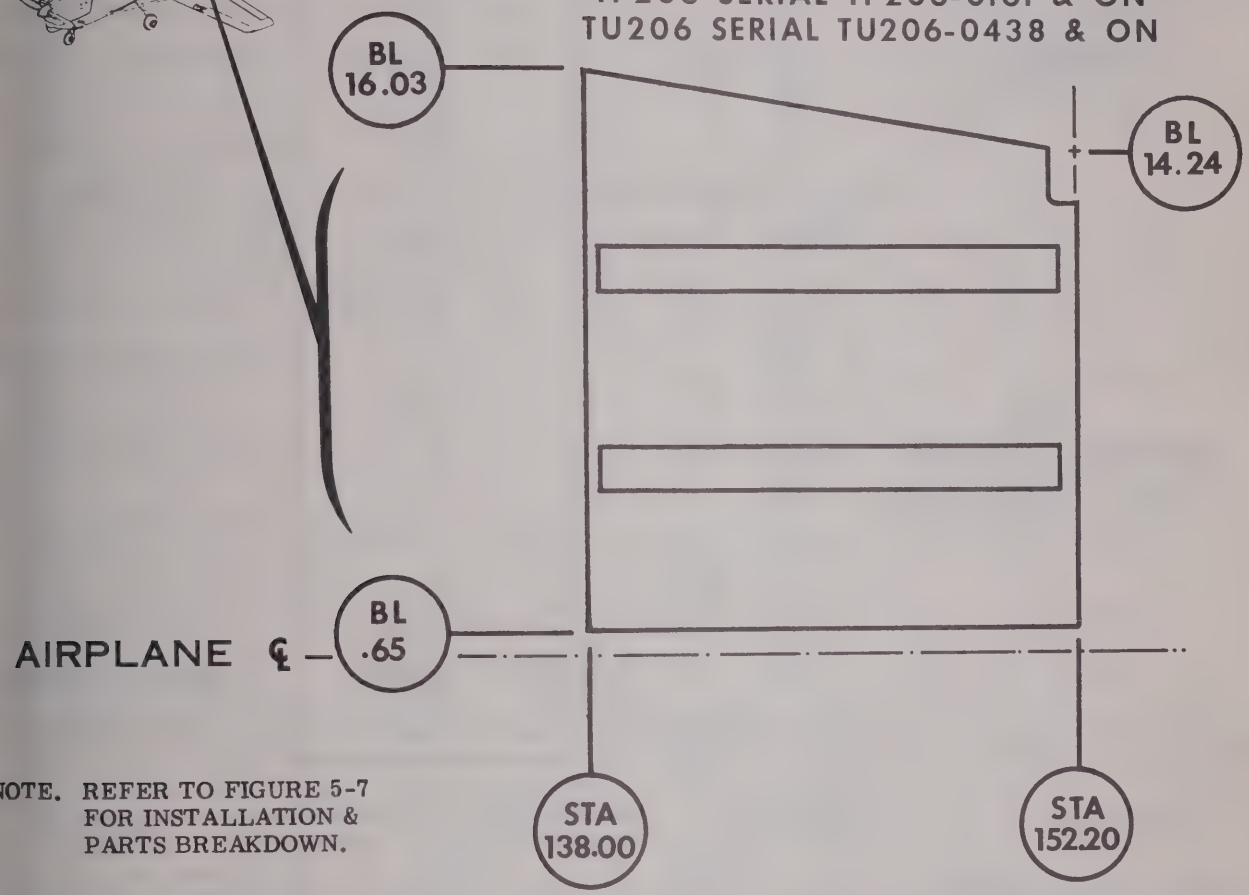


NOTE. REFER TO FIGURE 5-7 FOR INSTALLATION & PARTS BREAKDOWN.

| EQUIPMENT | FWD INBD ATTACH POINT | | AFT INBD ATTACH POINT | | COMPONENT WEIGHT | LOCATION |
|---|---|---|---|---|---|---|
| | B. L. | STA. | B. L. | STA. | | |
| NARCO | | | | | | |
| 12RP-9 RANGE OWER UNIT | 2.9 (R) | 145.5 | 2.9 (R) | 151.1 | 6.5# | Aux. Position |
| GR-1A RECEIVER | 2.8 (R) | 138.8 | 2.8 (R) | 144.4 | 4.7# | Aux. Position |
| V-319 DYNAVERTER | 3.9 (R) | 140.6 | 3.9 (R) | 143.9 | 3.6# | Aux. Pos. 1965 & on |
| -317 CONVERTER | 3.9 (R) | 146.5 | 3.9 (R) | 149.8 | 3.6# | Aux. Pos. 1965 & on |

Figure 11-6. Electronic Loading Chart - Model 205, 206, P206, U206, TP206 & TU206 Auxiliary Locations

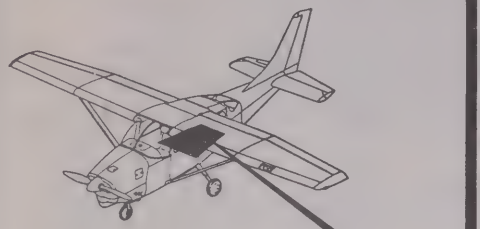

210
SERIAL 21058111
THRU 21058220

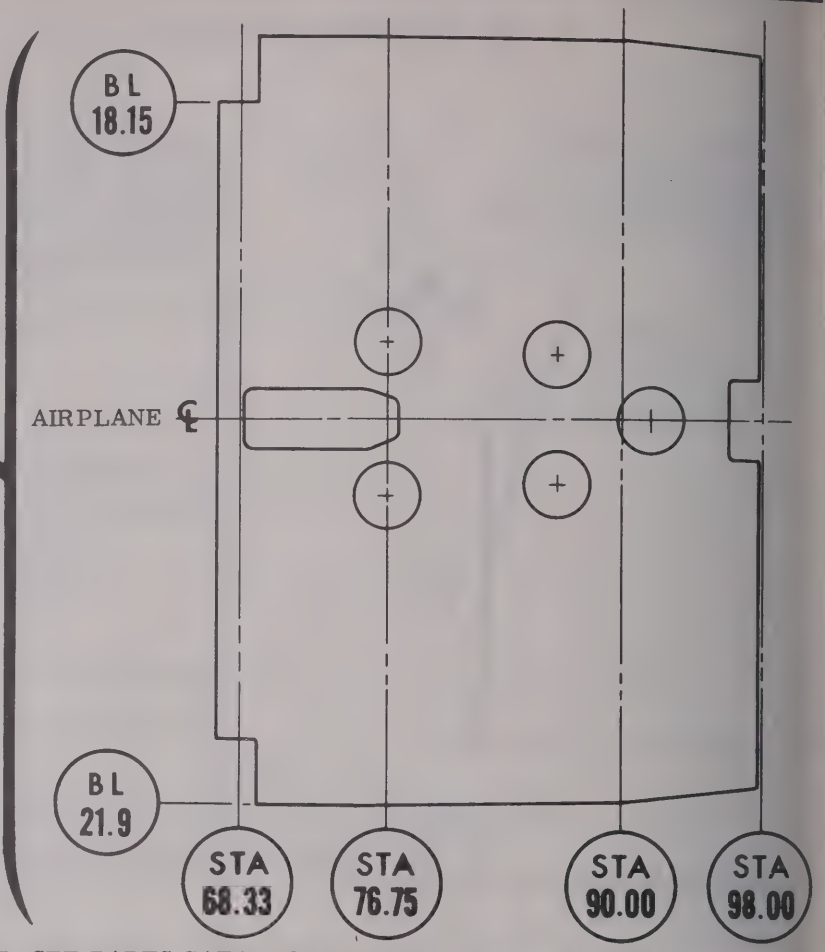


NOTE. SEE PARTS CATALOG FOR PART NUMBER OF FLOORBOARD.

| EQUIPMENT | FWD INBD ATTACH POINT | | AFT INBD ATTACH POINT | | COMPONENT WEIGHT | LOCATION |
|---|---|---|---|---|---|---|
| | B. L. | STA. | B. L. | STA. | | |
| AIRCRAFT RADIO CORP. | | | | | | |
| B-317 CONVERTER | 15.3 (R) | 87.0 | 15.3 (R) | 95.0 | 3.8# | Position # 1 |
| B-317 CONVERTER | 15.3 (L) | 87.0 | 15.3 (L) | 95.0 | 3.8# | Position # 2 |
| DV-317 DYNAVERTER | 9.8 (L) | 87.0 | 9.8 (L) | 95.0 | 3.8# | Position # 1 |
| DV-319 DYNAVERTER | 9.8 (R) | 87.0 | 9.8 (R) | 95.0 | 3.6# | Position # 1 |
| DV-302 DYNAVERTER | 5.1 (L) | 90.0 | 5.1 (L) | 93.2 | 3.8# | Position # 1 |
| DV-318 DYNAVERTER | 4.7 (R) | 89.9 | 4.7 (R) | 95.3 | 4.1# | Position # 1 |
| CESSNA (NAV/COM) | | | | | | |
| ACCESSORY UNIT 513A | 7.2 (L) | 92.8 | 7.2 (L) | 95.8 | 6.7# | Position # 1 |
| ACCESSORY UNIT 513A | 7.2 (R) | 92.8 | 7.2 (R) | 95.8 | 6.7# | Position # 2 |

Figure 11-7. Electronic Loading Chart - Model 210 (Sheet 1 of 4)

| EQUIPMENT | FWD INBD ATTACH POINT | | AFT INBD ATTACH POINT | | COMPONENT WEIGHT | LOCATION |
|---|---|---|---|---|---|---|
| | B. L. | STA. | B. L. | STA. | | |
| KING | | | | | | |
| KS-501(A) POWER UNIT | 13.0 (R) | 90.0 | 13.0 (R) | 92.6 | 3.22# | Position # 1 |
| KS-501(A) POWER UNIT | 4.3 (R) | 93.4 | 4.3 (R) | 96.0 | 3.22# | Position # 2 |
| NARCO | | | | | | |
| T12MP-2A POWER UNIT | 12.3 (R) | 92.5 | 12.3 (R) | 88.7 | 7.12# | Position # 1 |
| T12MP-2A POWER UNIT | 12.3 (R) | 86.8 | 12.3 (R) | 90.6 | 7.12# | Position # 2 |
| T12MP-7 MODULATOR POWER SUPPLY | 1.8 (R) | 89.0 | 1.8 (R) | 94.5 | 4.0# | Position # 1 |
| T12MP-7 MODULATOR POWER SUPPLY | .9 (R) | 89.0 | .9 (R) | 94.5 | 4.0# | Position # 2 |
| T12MP-8 MODULATOR POWER SUPPLY | 10.5 (L) | 85.3 | 10.5 (L) | 91.0 | 6.83# | Position # 1 |
| T12RP-9 RANGE POWER SUPPLY | 9.8 (L) | 91.5 | 9.8 (L) | 97.1 | 6.5# | Position # 1 |
| UGR-1A RECEIVER | 9.6 (R) | 85.3 | 9.6 (R) | 91.0 | 4.7# | Position # 1 |
| UGR-1A RECEIVER | 9.5 (L) | 91.5 | 9.5 (L) | 97.1 | 4.7# | Position # 2 |
| PANTRONICS | | | | | | |
| DX10-PS POWER SUPPLY | 9.6 (R) | 92.8 | 9.6 (R) | 97.1 | 4.5# | Position # 1 |

Figure 11-7. Electronic Loading Chart - Model 210 (Sheet 2 of 4)

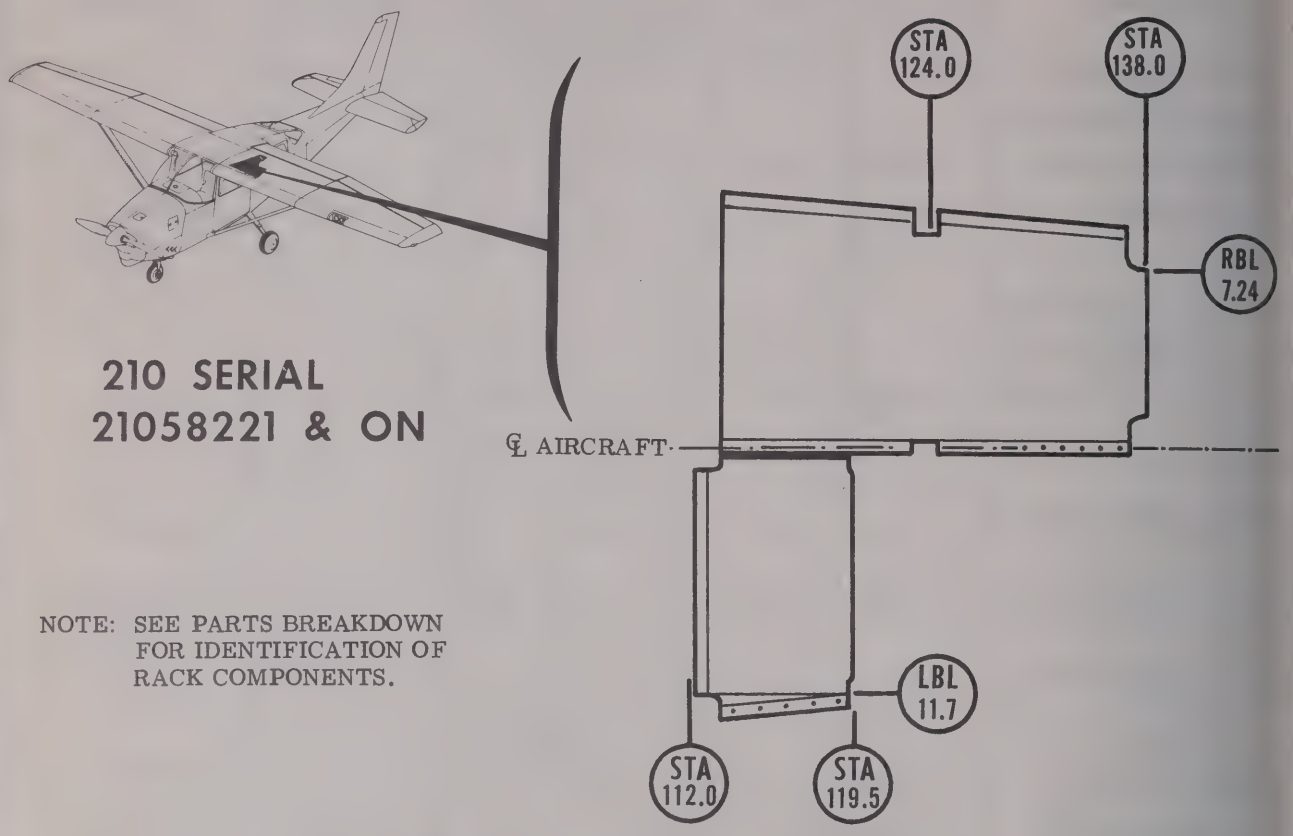


| EQUIPMENT | FWD INBD ATTACH POINT | | AFT INBD ATTACH POINT | | COMPONENT WEIGHT | LOCATION |
|---|---|---|---|---|---|---|
| | B. L. | STA. | B. L. | STA. | | |
| CESSNA | | | | | | |
| DV-302 DYNAVERTER | 3.4 (L) | 113.7 | 3.4 (L) | 117.00 | 3.8# | Position # 1 |
| DV-302 DYNAVERTER | .7 (R) | 119.0 | .7 (R) | 122.2 | 3.8# | Position # 2 |
| DV-319 DYNAVERTER | .7 (R) | 114.0 | .7 (R) | 117.3 | 3.6# | Position # 1 |
| B-317 CONVERTER | .7 (R) | 119.0 | .7 (R) | 122.3 | 3.8# | Position # 1 |
| B-317 CONVERTER | .7 (R) | 124.2 | .7 (R) | 127.5 | 3.8# | Position # 2 |
| DV-317 DYNAVERTER | .7 (R) | 129.2 | .7 (R) | 132.5 | 3.8# | Position # 1 |
| DV-318 DYNAVERTER | 2.1 (R) | 134.0 | 2.1 (R) | 137.7 | 4.1# | Position # 1 |
| RA-525A ACCESSORY UNIT | 4.7 (R) | 125.4 | 4.7 (R) | 135.4 | 5.7# | Position # 1 |

Figure 11-7. Electronic Loading Chart - Model 210 (Sheet 3 of 4)

| EQUIPMENT | FWD INBD ATTACH POINT | | AFT INBD ATTACH POINT | | COMPONENT WEIGHT | LOCATION |
|---|---|---|---|---|---|---|
| | B. L. | STA. | B. L. | STA. | | |
| KING | | | | | | |
| -501A POWER SUPPLY | 6.4 (R) | 125.0 | 6.4 (R) | 130.7 | 3.2# | Position # 1 |
| -501A POWER SUPPLY | 1.3 (R) | 125.0 | 1.3 (R) | 130.7 | 3.2# | Position # 2 |
| -505 POWER SUPPLY | 2.0 (R) | 125.3 | 2.0 (R) | 132.0 | 4.0# | Position # 1 |
| -505 POWER SUPPLY | 6.3 (R) | 125.3 | 6.3 (R) | 132.0 | 4.0# | Position # 2 |
| NARCO | | | | | | |
| 2MP-12 POWER SUPPLY | 5.7 (R) | 124.8 | 9.5 (R) | 130.3 | 4.3# | Position # 1 |
| 2MP-12 POWER SUPPLY | .8 (R) | 124.8 | .8 (R) | 130.3 | 4.3# | Position # 2 |
| GR-1A RECEIVER | .8 (R) | 114.0 | .8 (R) | 119.6 | 6.7# | Position # 1 |
| -12RP-9 RANGE OWER SUPPLY | .7 (R) | 114.0 | .7 (R) | 119.6 | 6.5# | Position # 1 |
| 770668-1 RELAY ASSY | 4.7 (R) | 121.7 | 6.9 (R) | 121.7 | | Position # 1 |
| PANTRONICS | | | | | | |
| X10-PS POWER SUPPLY | 0.7 (R) | 114.0 | 0.7 (R) | 118.4 | 4.5# | Position # 1 |
| 9033 POWER SUPPLY | 1.0 (R) | 113.1 | 10.2 (R) | 118.1 | 9.6# | Position # 1 |

Figure 11-7. Electronic Loading Chart - Model 210 (Sheet 4 of 4)

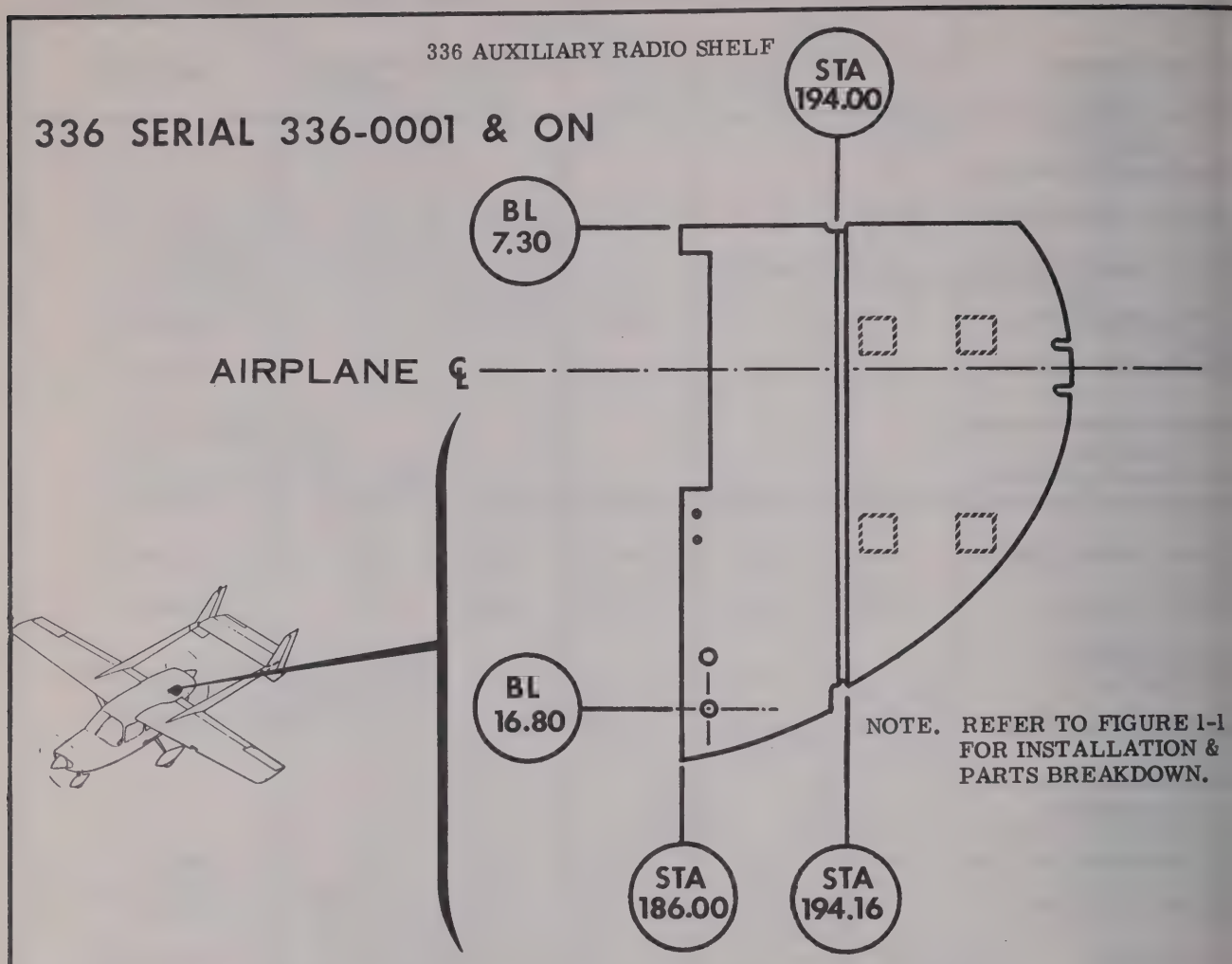


| EQUIPMENT | FWD INBD ATTACH POINT | | AFT INBD ATTACH POINT | | COMPONENT WEIGHT | LOCATION |
|---|---|---|---|---|---|---|
| | B. L. | STA. | B. L. | STA. | | |
| AIRCRAFT RADIO CORP | | | | | | |
| DV-302 DYNAVERTER | .4 (L) | 195.7 | .45 (L) | 199.0 | 3.8# | Position # 1 |
| KING | | | | | | |
| KR-20 MKR BCN | .1 (L) | 112.0 | | | 1.7# | See Fig. 3-4 |

Figure 11-8. Electronic Loading Chart - Model 336 - Auxiliary Locations

SECTION XII

# ARC TYPE F-503B ISOLATION AMPLIFIER MAINTENANCE AND PARTS MANUAL

NOTICE
For F-503A information refer to 1962 ELECTRONICS MANUAL.

## TABLE OF CONTENTS


| | Page |
|---|---|
| igure 12-1. F503B Isolation Amplifier | 12-1 |
| . PURPOSE AND USE | 12-2 |
| igure 12-2. Installation Dimensions | 12-3 |
| . SPECIFICATIONS | 12-4 |
| . INSTALLATION | 12-4 |
| .1. General | 12-4 |
| .2. Installation of the F-503B | 12-4 |
| 'igure 12-3. Terminal Identification | 12-5 |
| . OPERATION | 12-6 |
| Figure 12-4. Antenna Cable Assembly | 12-7 |
| . MAINTENANCE | 12-8 |
| .1. General | 12-8 |
| .2. Performance Test | 12-8 |
| Figure 12-5. Bench Test, Interconnecting Diagram | 12-9 |
| Figure 12-6. Wiring Diagram | 12-11 |
| Figure 12-7. Schematic Diagram | 12-12 |
| F-503B Isolation Amplifier Parts List | 12-13 |


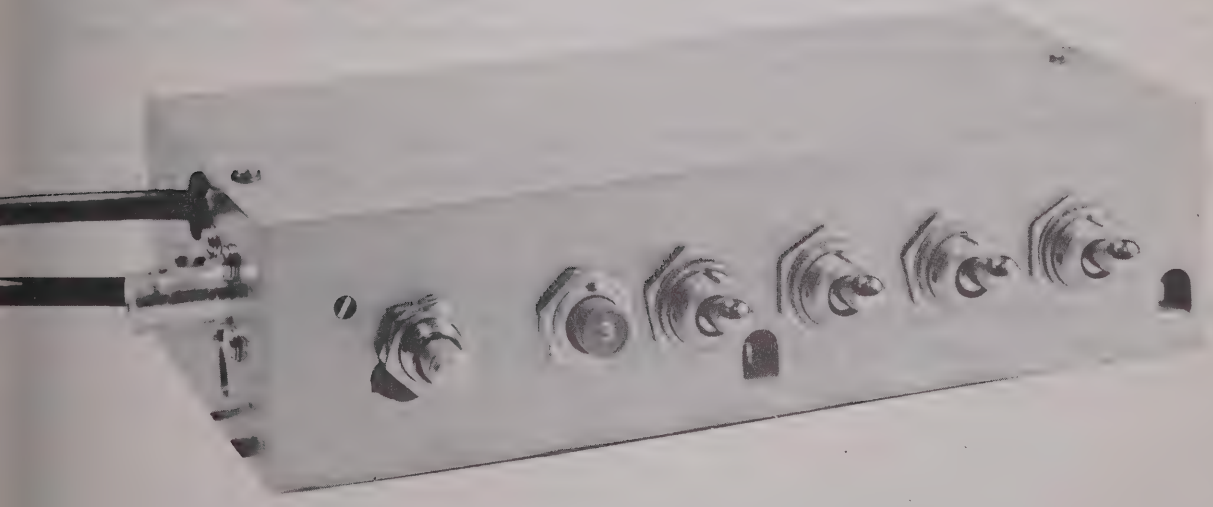

Figure 12-1. F-503B Isolation Amplifier

# ARC TYPE F-503B
# ISOLATION AMPLIFIER

## 1. PURPOSE AND USE

The ARC Type F-503B Isolation Amplifier (see Figure 12-1) is a transistorized, two stage audio isolation amplifier. The F-503B is designed to combine as many as five separate audio signals into a single channel.

In a typical aircraft audio system, the output signals of a marker beacon receiver a vhf communication receiver, two vhf navigation-communication receivers, and an ADF receiver are applied to the input circuits of the F-503B. The marker beacon input signal is applied directly through an isolation network to the amplifier stages of the F-503B. The other four input signals are applied through individual isolation networks and a single level control to the amplifier stages. The microphone and antenna circuits of two transmitters are connected through a switching circuit in the F-503B to the microphone jack and antenna, respectively, of the aircraft.

Four speaker-phone toggle switches are provided on the F-503B. These switches allow the operator to select any one or all of the input signals, except the marker beacon signal, for either speaker or phone operation. When a switch is set to the speaker (up) position, the associated input signal is fed through the F-503B to the loudspeaker. When a switch is set to the phone (down) position, the input signal is applied directly to the headset jack in the aircraft.

A two-position rotary switch is also used in the F-503B. The switch is used to select one of two transmitters for operation by completing the antenna, microphone, and key circuits of one transmitter, while opening similar circuits of the other transmitter. The selected transmitter is placed in operation by depressing the push-to-talk microphone button.

A three-ampere circuit breaker is provided on the F-503B. The circuit breaker opens the 14-volt d-c circuit of the F-503B if a malfunction in the unit draws excessive current.

The F-503B contains three 10-ohm speaker-load resistors. For each receiver with an 8-ohm output impedance connected to the F-503B, a speaker-load resistor should be connected across the receiver output.

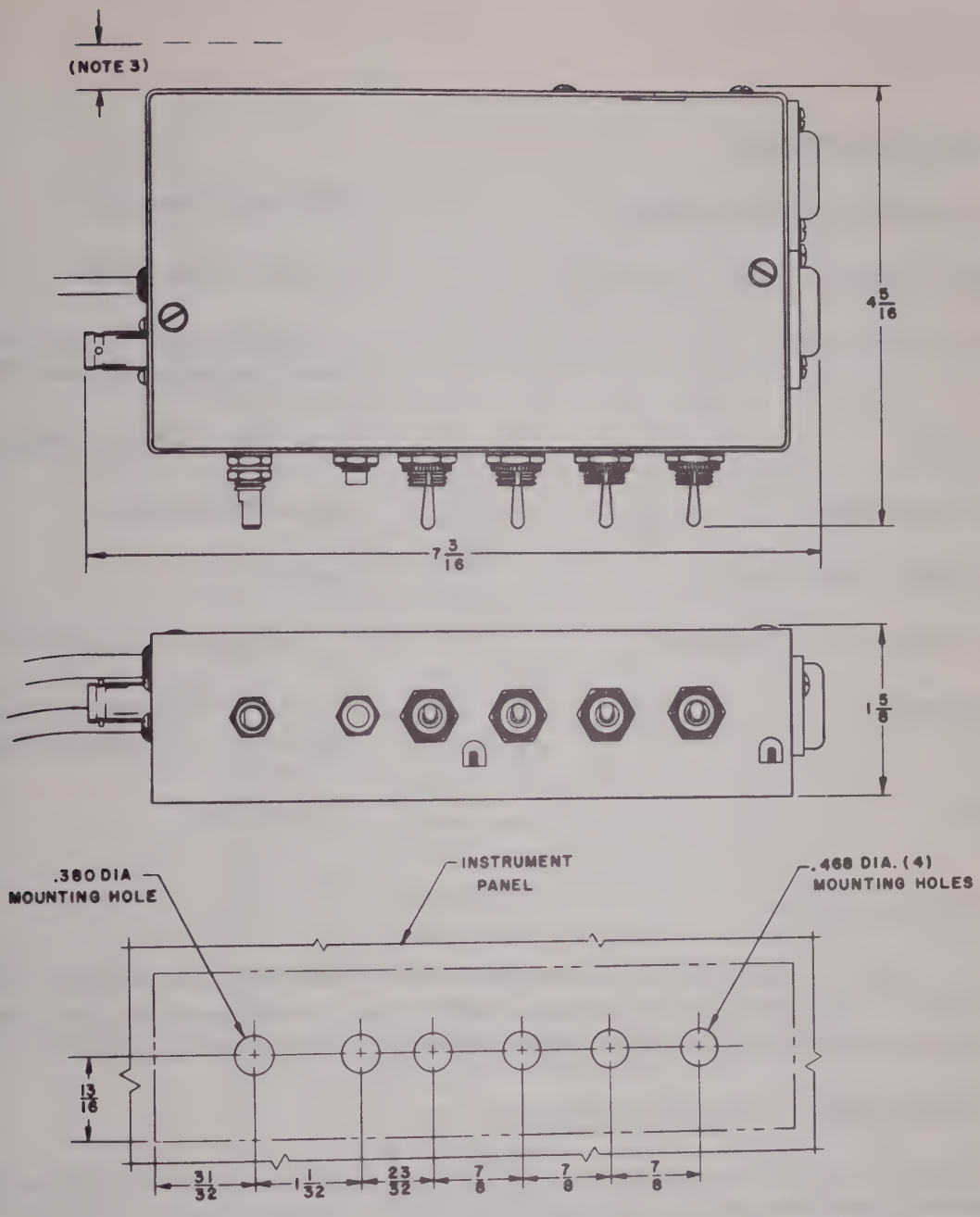





NOTES:

1. DIMENSIONS ARE IN INCHES.
2. WEIGHT 1.4 POUNDS.
3. ALLOW 2 INCHES FOR CABLE BEND.

Figure 12-2. Installation Dimensions

## 2. SPECIFICATIONS

| | |
|---|---|
| Input Impedance (each channel): | 500 ohms (nominal) |
| Isolation Between Input Channels: | Greater than 30 db |
| Frequency Response: | ± 2 db from 1000-cps reference level between 350 and 3000 cps |
| Distortion: | Less than 10% at 3 watts output |
| Output Impedance: | 4 ohms (nominal) |
| Audio Output (Maximum) : | 5 watts |
| Power Required (Maximum): | 0.7 ampere at 14 volts dc |
| Dimensions: | 7-3/16 inches wide by 1-5/8 inche high by 5-1/8 inches deep |
| Weight: | 1.5 pounds |

## 3. INSTALLATION

3.1. General. The F-503B is designed to be mounted on an aircraft instrument panel. The amplifier is secured to the instrument panel by lock washers and round knurled nuts which are supplied with the switches of the unit.

3.2. Install the F-503B as follows:

Step 1. Select an area on the instrument panel that is within 32 inches of the transmitters that are to be connected to the F-503B. Be sure there is sufficient area behind the panel for the F-503B (See Figure 12-2).

Step 2. Drill one 0.380-inch and five 0.468-inch holes in the instrument panel in locations shown in Figure 12-2.

Step 3. Construct an open-wire cable to interconnect the F-503B and the associated equipment. Use color-coded wires or tag both ends to simplify interconnection and future maintenance. Attach the individual wires of the cable to the appropriate terminals of connector P1 (see Figure 12-3).

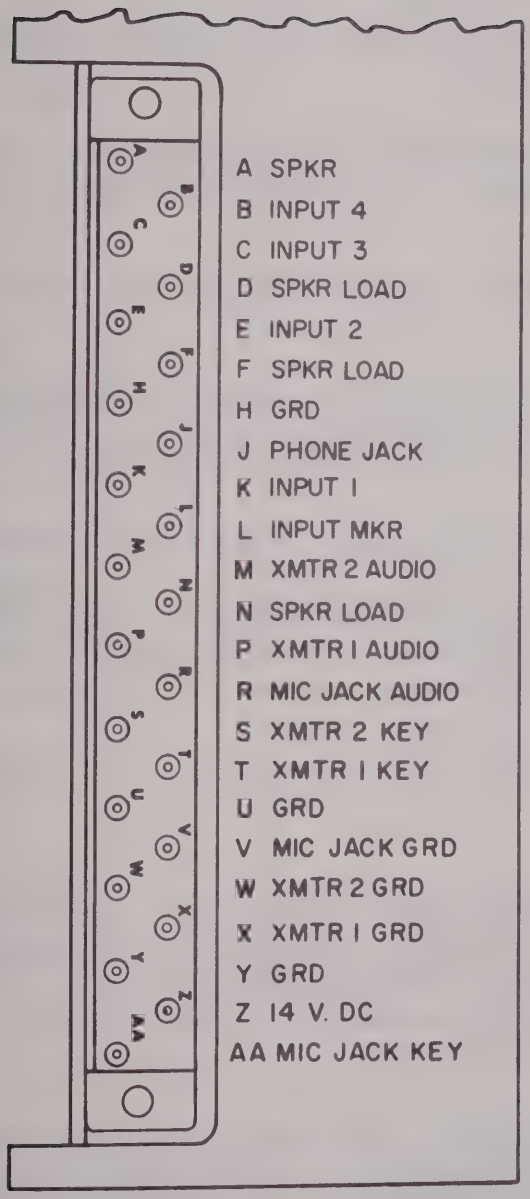


Figure 12-3. Terminal Identification

NOTE

The output circuit of the marker beacon receiver should be connected to TB1 through a speaker-phone toggle switch. This toggle switch should be installed on the instrument panel, as close as possible to the F-503B.

Step 4. Use the cable clamp on the rear of the F-503B to secure the cable to the F-503B.

Step 5. Attach the appropriate connector to each F-503B coaxial cable (see Figure 12-4). Check the tag on each cable and connect the cable to the appropriate transmitter.

Step 6. Connect F-503B coaxial cable connector J2 to transmitting antenna.

Step 7. Remove the round knurled nuts and lockwashers from each F-503B switch. Mount the unit from the rear of the instrument panel and, using the lockwashers and knurled nuts, secure the unit to the panel.

Step 8. Install a pointer-type knob on the rotary selector switch.

Step 9. If switch positions are not stamped on the instrument panel, label the counterclockwise position of the rotary switch TRANS 1, and the clockwise position TRANS 2. Label the up position on the toggle switches SPKR, and the down position PHONE.

## 4. OPERATION

After the four toggle switches of the F-503B are set for the desired combination of input signals, operation of the unit consists simply of using the rotary switch to select a desired transmitter. Muting of the selected receivers and keying of the selected transmitter will be accomplished automatically when the push-to-talk switch on the microphone is closed.

If a failure occurs in the F-503B, emergency operation of the associated receivers may be obtained by setting the four SPKR-PHONE switches to PHONE, and monitoring the output of the receivers with a headset.

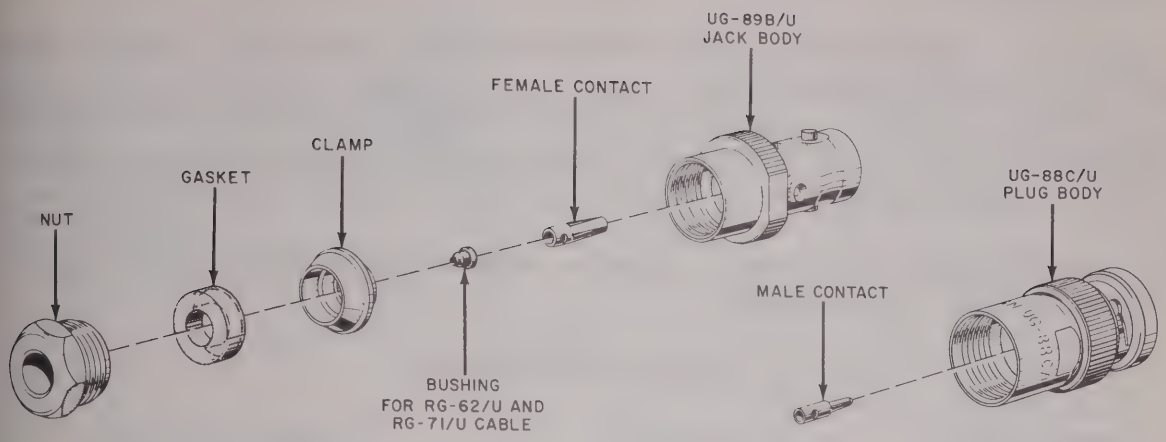


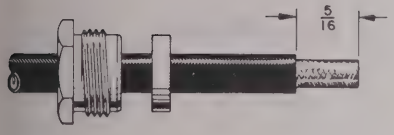


PLACE NUT AND GASKET OVER CABLE AND TRIM JACKET TO DIMENSION SHOWN. UNGROOVED FACE OF GASKET MUST BE TOWARD NUT.

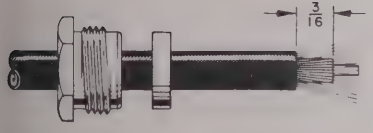


COMB OUT BRAID AND CUT CABLE DIELECTRIC TO DIMENSION SHOWN, BEING CAREFUL NOT TO NICK CENTER CONDUCTOR. TIN CENTER CONDUCTOR.

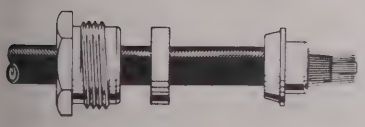

PULL BRAID WIRES FORWARD AND TAPER TOWARD CENTER CONDUCTOR. PLACE CLAMP OVER BRAID AND PUSH AGAINST CABLE JACKET.

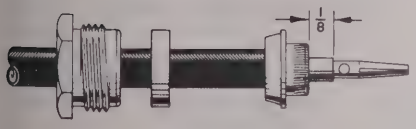


FOLD BACK BRAID WIRES AS SHOWN, TRIM TO PROPER LENGTH, AND FORM OVER CLAMP AS SHOWN. FOR RG-62/U AND RG-71/U CABLE, SLIP BUSHING OVER CENTER CONDUCTOR AND UNDER DIELECTRIC. SOLDER CONTACT TO CENTER CONDUCTOR.

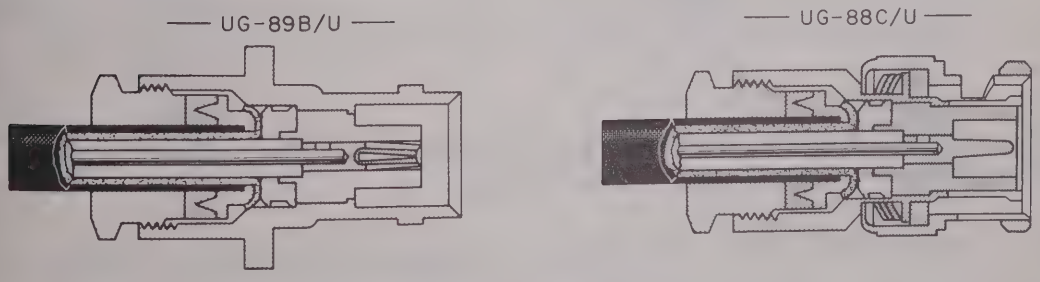


INSERT CABLE AND PARTS INTO CONNECTOR BODY. MAKE SURE SHARP EDGE OF CLAMP SEATS PROPERLY IN GASKET. TIGHTEN NUT.

Figure 12-4. Antenna Cable Assembly

## 5. MAINTENANCE

5.1. General. The bench test interconnection diagram for the F-503B is shown in Figure 12-5. Wiring and schematic diagrams are shown in Figures 12-6 and 12-7. In case of faulty operation, remove the amplifier and inspect for loose connections and evidence of overheating. If visual inspection does not disclose the trouble, check for abnormal voltages at the points specified on the schematic diagram.

Table 1 lists the test equipment required to maintain the F-503B; equivalent test equipment may be substituted.

TABLE 1. TEST EQUIPMENT

| Qty | Name | Designation | Characteristics |
|---|---|---|---|
| 2 | A-c Voltmeter | Ballantine Model 300 | -- |
| 1 | Ammeter | Weston Model 301 | 0 to 1 ampere |
| 1 | Audio Oscillator | Hewlett-Packard Model 200AB | -- |
| 1 | Multimeter | Simpson Model 260 | -- |
| 1 | Oscilloscope | Dumont Model 208 | -- |
| 1 | Output Power Meter | General Radio Model 583A | -- |
| 1 | Power Supply | -- | 13 volts, 5 amperes dc |
| 1 | Resistor | -- | 470 ohms, 1 watt |

5.2. Performance Test. Test the F-503B as follows:

Step 1. Interconnect F-503B and test equipment as shown in Figure 12-5. Apply power to test equipment and F-503B, and allow a 15-minute warmup period.

Step 2. Set up General Radio Type 583-A Output Power Meter for a 4-ohm load impedance and a 5-watt power range.

Step 3. Set F-503B level control fully clockwise (maximum output).

Step 4. Read idle current indicated on Weston Model 301 Ammeter. Idle current should be 0.09 ± 0.02 ampere.

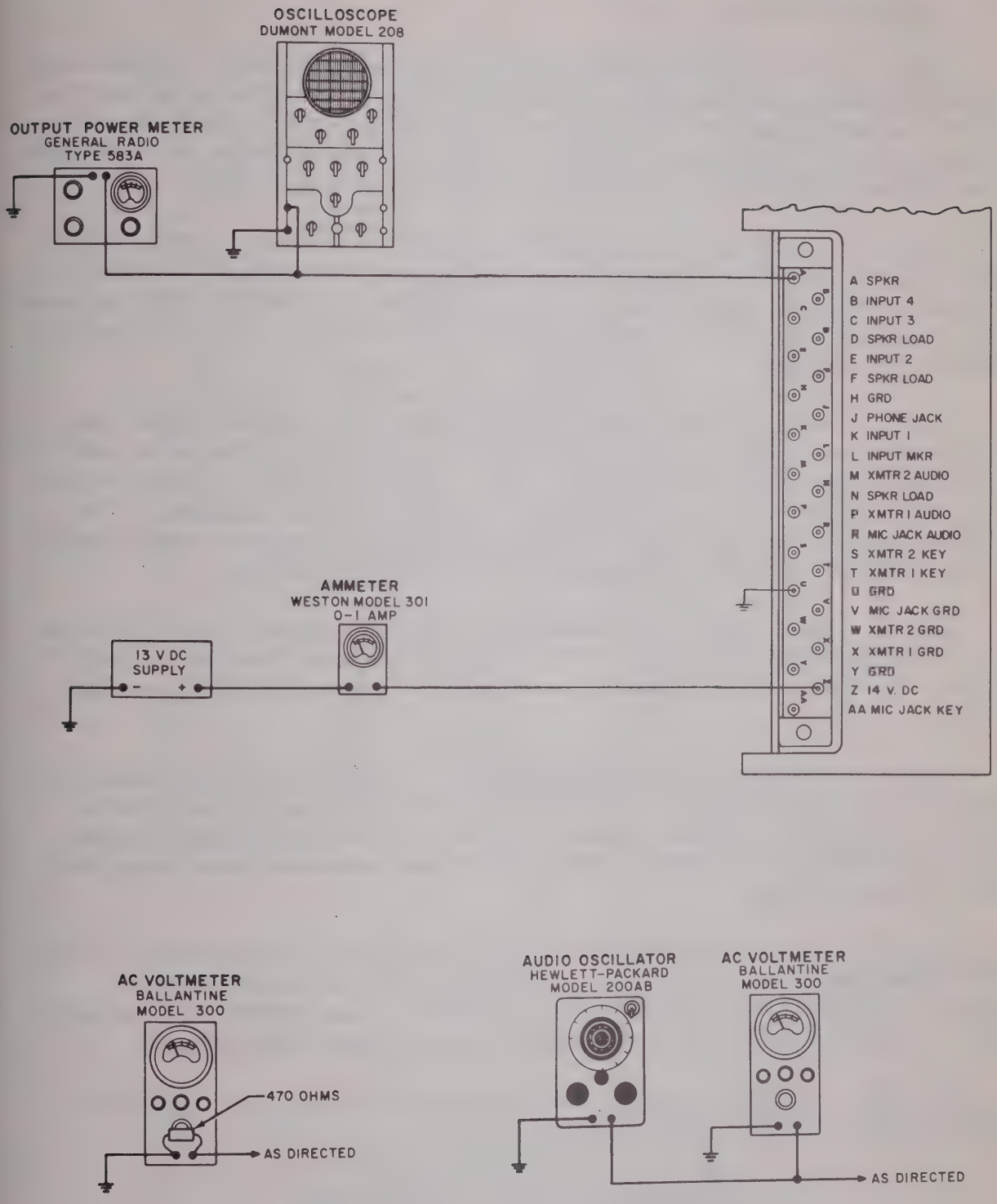


Figure 12-5. Bench Test, Interconnecting Diagram

5.2. Performance Test (cont)

Step 5. Set all F-503B SPKR-PHONE switches to SPKR. Adjust output of Hewlett-Packard Model 200AB Audio Oscillator for a 1000-cps output frequency. Adjust output level of audio oscillator for a 5-watt indication on output power meter. Read audio oscillator output voltage indicated on Ballantine Model 300 A-c Voltmeter. Voltage should be less than 5.0 volts.

Step 6. Repeat Step 5 for INPUT 2, INPUT 3, INPUT 4, and INPUT MKR terminals of P1. Output voltage of audio oscillator should be less than 5.0 volts at each terminal. With oscillator connected to INPUT MKR terminal of P1, read full-power line current indicated on ammeter. Current should be less than 0.7 ampere.

Step 7. Reduce level of 1000-cps audio oscillator output signal until output power meter indicates a 1-watt F-503B output level. Increase level of 1000-cps signal until output power meter indicates 3 watts. Check Dumont Model 208 Oscilloscope as audio oscillator output level is increased. The sinusoidal waveshape should be clipped when output is approximately 3 watts, but there should be no other distortion of the sinusoidal pattern.

Step 8. Set F-503B level control R7 fully counterclockwise. Increase audio oscillator output level until a-c voltmeter indicates 10 volts. Check F-503B output indicated on output power meter. Output should be less than 5 watts.

Step 9. Set level control R7 to midrange. Adjust audio oscillator to obtain a 3-watt, 1000-cps F-503B output. Maintain a constant-level input signal while varying the input frequency between 350 and 3000 cps. Output level of F-503B should be within 2 db of 1000-cps reference level throughout entire frequency range.

Step 10. Adjust audio oscillator for a 1000-cps, 10-volt output. Using a Ballantine Model 300 A-c Voltmeter shunted with a 470-ohm resistor, measure voltage appearing at INPUT 1, INPUT 2, and INPUT 3 terminals of P1. Voltage at these terminals should not be greater than 0.2 volt.

Step 11. Connect a jumper between MIC JACK KEY and GND terminals of P1. F-503B output should be muted.

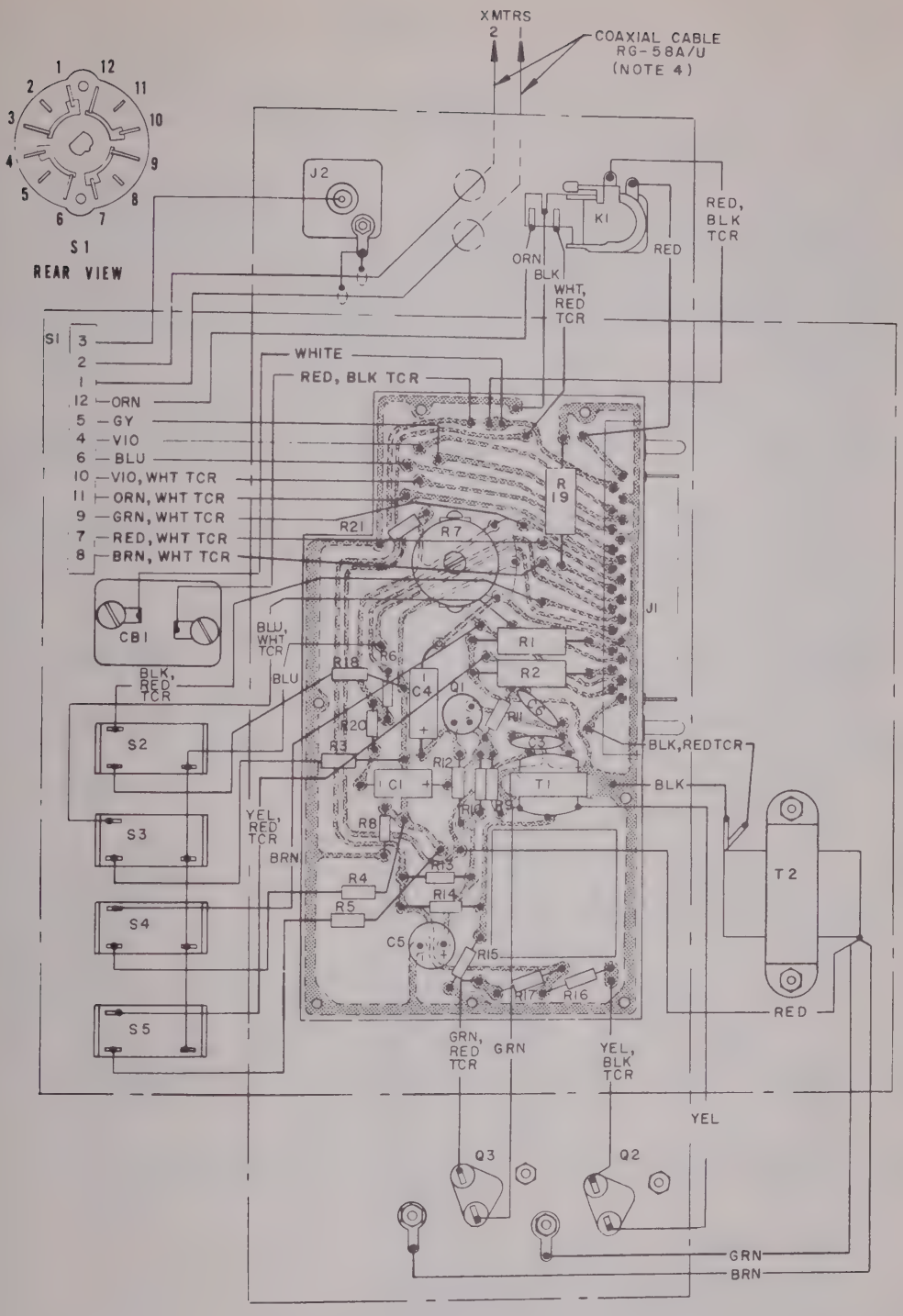


NOTES:

1. FOR SCHEMATIC DIAGRAM, SEE FIGURE 12-7.
2. UNMARKED WIRE IS NO. 20 AWG SOLID, BARE, TINNER COPPER. WIRES MARKED WITH A COLOR NOTE ARE NO. 22 AWG SOLID COPPER, VINYLITE INSULATED. WIRES MARKED WITH A COLOR NOTE AND AN ASTERISK (*) ARE SUPPLIED WITH THE ATTACHED TRANSFORMER.
3. SHADED AREA DENOTES UNETCHED COPPER ON OPPOSITE SIDE OF BOARD.
4. RG-58A/U COAXIAL LENGTH: 32 INCHES.

Figure 12-6. Wiring Diagram

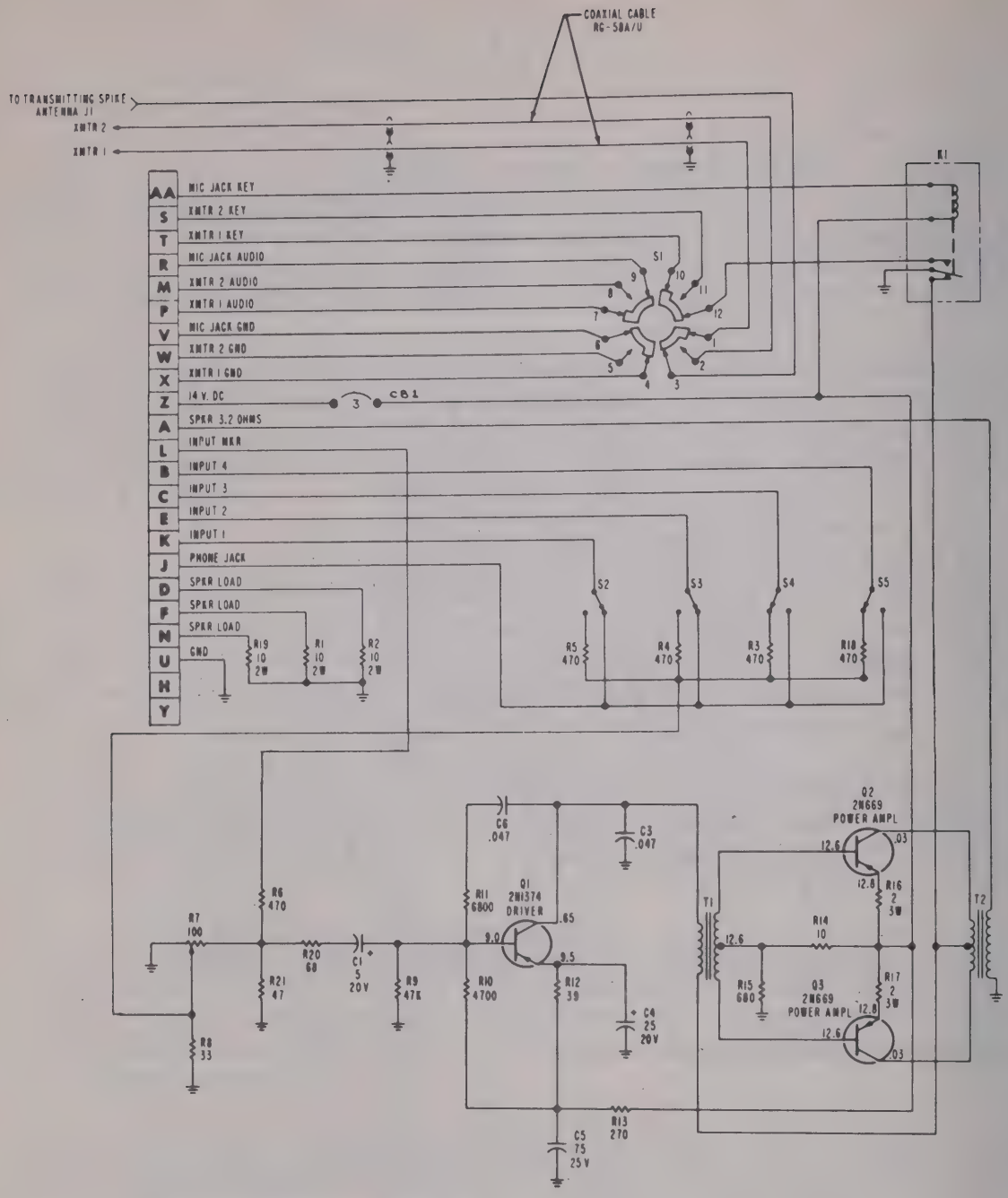


NOTES:

1. FOR WIRING DIAGRAM, SEE FIGURE 12-6.
2. RESISTANCE VALUES ARE IN OHMS; MULTIPLIER K=1000.
3. CAPACITOR VALUES ARE IN MICROFARADS ( F).
4. SWITCH S1, A TWO-POSITION ROTARY SWITCH (TRANS 1 AND TRANS 2), IS SHOWN IN TRANS 1 POSITION.
5. SWITCHES S2 and S3 ARE SHOWN IN PHONE POSITION. SWITCHES S4 AND S5 ARE SHOWN IN SPKR POSITION.
6. TRANSISTOR VOLTAGE VALUES ARE APPROXIMATE (±20%). D-C LEVELS OBTAINED UNDER FOLLOWING CONDITIONS:
   - A. VALUES ARE WITH RESPECT TO CHASSIS GROUND.
   - B. 13 VOLTS DC MEASURED AT "14 VDC PWR" TERMINAL OF TB1.
   - C. NO AUDIO INPUT SIGNAL APPLIED TO F-503A.
   - D. 20,000 OHMS-PER-VOLT VOLTMETER USED FOR MEASUREMENTS.

Figure 12-7. Schematic Diagram

## F-503B Isolation Amplifier Parts List

| Reference Designator | Parts Number | Description and Manufacturer |
|---|---|---|
| 2-7 | | F-503B AUDIO ISOLATION AMPLIFIER INSTL ARC |
| | 0770640-2 | AUDIO AMPLIFIER ARC F-503B |
| | 27986 | COVER ARC |
| | | ATTACHING PARTS |
| | 3/16" SEMS | SCREW |
| | 5030012 | WASHER SLK |
| | | ---*--- |
| -CB1 | D6755-1-3 | CIRCUIT BREAKER T1 |
| -C1 | APD016 | CAPACITOR, Fixed, electrolytic, 5 uf +100 -10 percent, 25 vdcw IEI |
| -C2 | | NOT USED |
| -C3 | GP5-825 | CAPACITOR, Fixed, ceramic, 0.047 uf ±20 percent, 100 vdcw ERC |
| -C4 | APD045 | CAPACITOR, Fixed, electrolytic, 25 uf +100 -10 percent, 20 vdcw IEI |
| -C5 | APS136 | CAPACITOR, Fixed, electrolytic, 75 uf +100 - 10 percent, 25 vdcw IEI |
| -C6 | | CAPACITOR, Fixed, same as -C3 |
| -J1 | 213-23-42-194 | CONNECTOR - RECEPTACLE CIN |
| -J2 | 87000 | CONNECTOR, Receptacle, electrical IPC |
| -K1 | 11914 | RELAY, Armature, 14 v ARC |
| -Q1 | 2N1374 | TRANSISTOR T1 |
| -Q2 | 2N669 | TRANSISTOR MOAV |
| -Q3 | | TRANSISTOR, Same as -Q2 |
| -P1 | HB1005 | RESISTOR, Fixed, comp, 10 ohms ± 5 percent, 2 w AB |
| -R2 | | RESISTOR, Fixed, same as -R1 |
| -R3 | EB4715 | RESISTOR, Fixed, comp, 470 ohms ± 5 percent, 1/2 w AB |
| -R4 | | RESISTOR, Fixed, same as -R3 |
| -R5 | | RESISTOR, Fixed, same as -R3 |
| -R6 | | RESISTOR, Fixed, same as -R3 |
| -R7 | LH61-1 | RESISTOR, Variable, comp, 100 ohms ±30 percent, 0.75 w STL |
| -R8 | EB3305 | RESISTOR, Fixed, comp, 33 ohms ±5 percent, 1/2 w AB |
| -R9 | EB4735 | RESISTOR, Fixed, comp, 47,000 ohms ±5 percent, 1/2 w AB |
| -R10 | EB4725 | RESISTOR, Fixed, comp, 4,700 ohms ± 5 percent, 1/2 w |
| -R11 | EB6825 | RESISTOR, Fixed, comp, 6800 ohms ± 5 percent, 1/2 w AB |

F-503B Isolation Amplifier Parts List (cont)

| Reference Designator | Parts Number | Description and Manufacturer |
|---|---|---|
| 2-7-R12 | EB3905 | RESISTOR, Fixed, comp, 39 ohms ± 5 percent, 1/2 w AB |
| -R13 | EB2715 | RESISTOR, Fixed, comp, 270 ohms ± 5 percent, 1/2 w AB |
| -R14 | EB1005 | RESISTOR, Fixed, comp, 10 ohms ± 5 percent, 1/2 w AB |
| -R15 | EB6815 | RESISTOR, Fixed, comp, 680 ohms ± 5 percent, 1/2 w AB |
| -R16 | RS2-2ROH | RESISTOR, Fixed, ww, 2 ohms ± 3 percent, 3 w DABU |
| -R17 | | RESISTOR, Fixed, same as -R16 |
| -R18 | | RESISTOR, Fixed, same as -R3 |
| -R19 | | RESISTOR, Fixed, same as -R1 |
| -R20 | EB6805 | RESISTOR, Fixed, comp, 68 ohms ± 5 percent, 1/2 w AB |
| -R21 | EB4705 | RESISTOR, Fixed, comp, 47 ohms ± 5 percent, 1/2 w AB |
| -S1 | Type F | SWITCH, Rotary, 1 section, 2 position OAK |
| -S2 | 8284K14 | SWITCH, Toggle, S. P. D. T., 3 amp at 125 v, 1 amp at 250 v CUT |
| -S3 | | SWITCH, Toggle, same as -S2 |
| -S4 | | SWITCH, Toggle, same as -S2 |
| -S5 | | SWITCH, Toggle, same as -S2 |
| -TB1 | 29195 | PRINTED CIRCUIT BOARD ARC |
| -T1 | 50381 | TRANSFORMER, Audio, interstage ARC |
| -T2 | 50165-0002 | TRANSFORMER, Audio ARC |

THE RADIO DIAGRAMS ARE DIVIDED INTO MODELS AS FOLLOWS:

# THUMB INDEX

# SECTION XIII

# ELECTRONIC WIRING DIAGRAMS

NOTE

The page numbering method in this Section differs from that of the rest of the book. However, each model section begins with an index of diagrams contained therein, which will facilitate locating any particular diagram.

MODEL 150
THRU 1963 MODELS

MODEL 150
1964 MODELS & ON

MODELS 172 & P172
THRU 1963 MODELS

MODEL 172
1964 MODELS & ON

MODELS 180 & 185
THRU 1964 MODELS

MODELS 180 & 185
1965 MODELS & ON

MODEL 182
THRU 1964 MODELS

MODEL 182
1965 MODELS & ON

MODELS 205 & 206
THRU 1964 ONLY

MODELS P206, U206,
TP206 & TU206
1965 MODELS & ON

MODEL 210
THRU 1964 MODELS

MODELS 210 & T210
1965 MODELS & ON

MODEL 336
THRU 1964 MODELS

MODEL 337
1965 MODELS & ON

# NOTES

1. WIRE CODE DESIGNATIONS PER CES 1100.

2. WIRE CODE APPLICATION AND WIRE LENGTH TOLERANCES PER CES 1015.

3. "S" SUFFIX ON WIRE GAUGE IN WIRE TABLE DENOTES SHIELDED WIRE.
   a. "DS" SUFFIX ON WIRE GAUGE IN WIRE DENOTES DOUBLE SHIELDED WIRE.

4. NON-SHIELDED WIRES TO BE PER MIL-W-5086A, TYPE I (PVC), NYLON JACKET. WIRES 10-GAUGE AND LARGER TO BE TYPE II CONSTRUCTION.

5. SHIELDED WIRES TO BE PER MIL-C-7078A, TYPE II WITH MIL-W-5086A TYPE I CONDUCTOR.

6. PART NUMBERS SHOWN IN THE "EQUIPMENT TABLE" OF THE VARIOUS PAGES ARE FOR REFERENCE ONLY AND DO NOT CONSTITUTE A MATERIAL REQUIREMENT UNLESS SPECIFICALLY NOTED ON THE INDIVIDUAL PAGE. REFER TO THE VARIOUS EQUIPMENT INSTALLATION DRAWINGS FOR VERIFICATION OF PART NUMBERS.

7. ALL WIRES NOT SPECIFIED AS (OPT) ARE TO BE INSTALLED AS STANDARD EQUIPMENT. THE AIRPLANE ASSEMBLY WILL SPECIFY THE ADDITIONAL EQUIPMENT REQUIRED FOR DELUXE VERSIONS.

8. ALL WIRES TO BE TYPE I UNLESS OTHERWISE NOTED IN WIRE TABLE.

9. EQUIPMENT PART NUMBERS SHOWN ON THE VARIOUS PAGES THAT ARE FOR REFERENCE ONLY, (SEE NOTE 6), WILL NOT BE CHANGED UNLESS IT AFFECTS WIRE TERMINALS AND FABRICATION.

10. VENDOR CODES PER S-1400. VENDOR CODES ARE SHOWN IN PARENTHESIS.

# TABLE OF CONTENTS

| NO. | TITLE | DATE ISSUED | REV |
|---|---|---|---|
| | **1963 SERIALS 15059701 thru 15060087** | | |
| 1 | Speaker, Mike Jack, and Light Rheostat (Opt.) | 10-4-62 | B |
| 2 | King KY-90 & KY-95 (Opt.) | 10-4-62 | B |
| 3 | Superhome (Opt.) | 10-4-62 | B |
| 4 | King KX-150 Director (Opt.) | 10-25-62 | |

| CHG LET | REVISION | BY / DATE | CHK / APPD |
|---|---|---|---|
| B | ADDED LG1, RD100 & RP2 THRU RP5 | [illegible] 8-28-62 | RRS [illegible] |

NOTES:

1. WIRES TO BE OF SUFFICIENT LENGTH TO ALLOW CONNECTION TO ALL POSSIBLE RADIO COMBINATIONS. TERMINALS TO BE ATTACHED TO WIRES AS REQ'D BY VARIOUS RADIO INSTALLATIONS.
2. WIRES RP2, RP3, RP4, RP5, & LG1 TO BE CODED "SPKR", "MIKE AUD", "MIKE KEY" "MIKE GND", & "LT DIM" RESPECTIVELY. CODING PER CES 1100 IS OPT ON THESE WIRES.

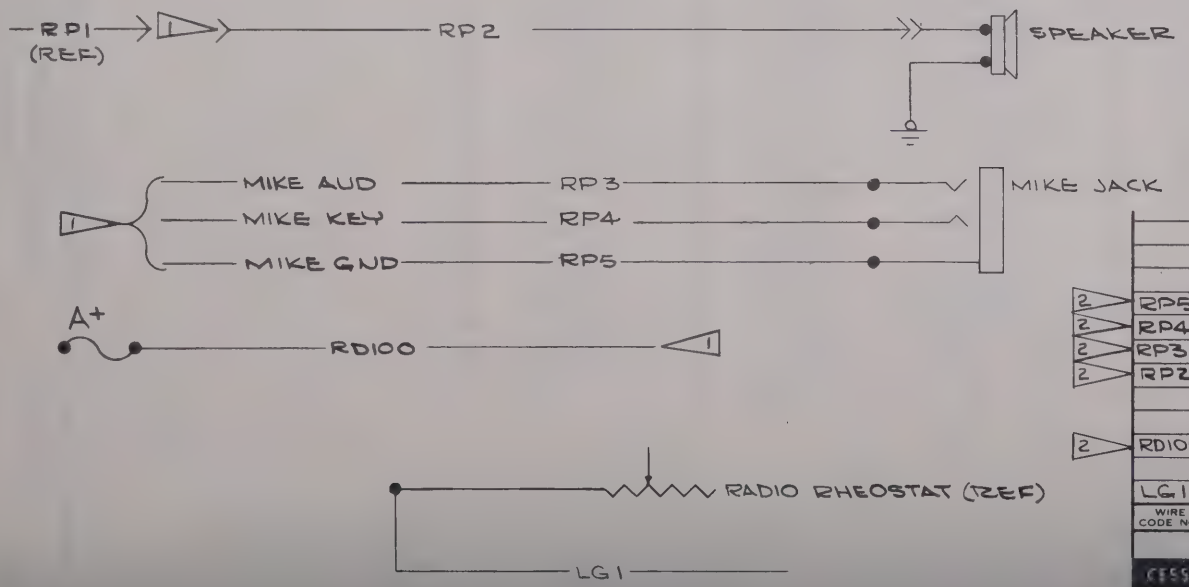


| WIRE CODE NO. | GA | MATERIAL | LG | TERMINALS | | | SERIALS |
|---|---|---|---|---|---|---|---|
| RP5 | 20 | | | 1 | — | | OPT |
| RP4 | 20 | | | 1 | — | | OPT |
| RP3 | 20 | | | 1 | — | | OPT |
| RP2 | 20 | | | 1 | — | | STD |
| RD100 | 18 | | | 1 | S-1367-1-8 | | OPT |
| LG1 | 18 | | | — | — | | OPT |

WIRE TABLE

CESSNA AIRCRAFT CO. COMMERCIAL AIRCRAFT DIVISION WICHITA KANSAS

| | NAME | DATE |
|---|---|---|
| DRAWN | TENNANT | 3/4/60 |
| GROUP | | |
| CHECK | [illegible] | 3/8/60 |

TITLE: WIRING DIAGRAM — SPEAKER, MIKE JACK & LIGHT

Cessna.

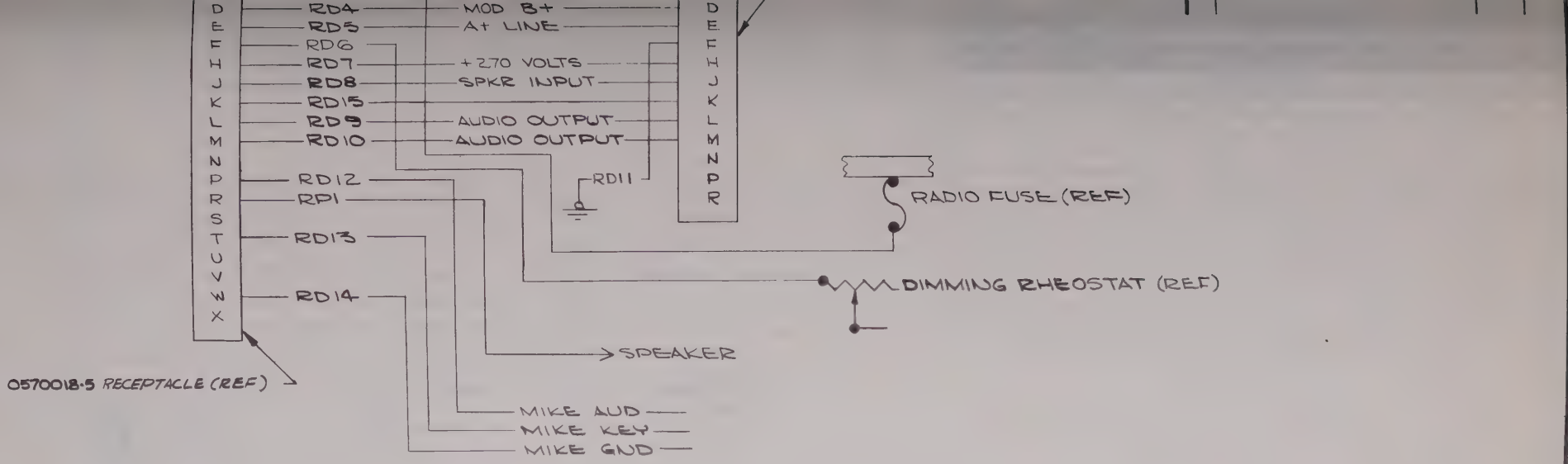


NOTE:

1. RD1 THRU RD15 ARE IDENTICAL TO & SUPERSEDE 0410018-RD1 THRU 0410018-RD15 RESPECTIVELY. RP1 IS IDENTICAL TO & SUPERSEDES 0410018-RP1
2. RD6, RD12, RD13, RD14, & RP1 ARE TO BE CODED "LT DIM", "MIKE AUD", "MIKE KEY", "MIKE GND", & "SPKR" RESPECTIVELY. NUMERICAL CODING PER CES 1100 IS OPT ON THESE WIRES.

| | WIRE CODE NO. | GA | MATERIAL | LG | TERMINALS | | N/A | SERIALS |
|---|---|---|---|---|---|---|---|---|
| 2 | RP1 | 18 | | | S-341-2 | — | 0410018 | |
| | RD15 | 18 | | | — | — | | |
| 2 | RD14 | 18 | | | — | — | | |
| 2 | RD13 | 18 | | | — | — | | |
| 2 | RD12 | 18 | | | — | — | | |
| | RD11 | 18 | | | S-1367-1-10 | — | | |
| | RD10 | 18 | | | — | — | | |
| | RD9 | 18 | | | — | — | | |
| | RD8 | 18 | | | — | — | | |
| | RD7 | 18 | | | — | — | | |
| 2 | RD6 | 18 | | | — | — | | |
| | RD5 | 16 | | | — | — | | |
| | RD4 | 18 | | | — | — | | |
| | RD3 | 16 | | | — | — | | |
| | RD2 | 16 | | | — | — | | |
| | RD1 | 18 | | | — | — | 0410018 | |

WIRE TABLE

| ITEM NO | PART NO. | DESCRIPTION | INSTALLED ON |
|---|---|---|---|

EQUIPMENT TABLE

CESSNA AIRCRAFT CO COMMERCIAL AIRCRAFT DIVISION WICHITA KANSAS

| | NAME | DATE |
|---|---|---|
| DRAWN | TENNANT | 3/8/60 |
| GROUP | | |
| CHECK | COOK | 3/8/60 |
| PROJ | SATTLER | 3/10/60 |

TITLE: WIRING DIAGRAM — KING KY90 & KY95 (OPT)

Cessna.

DWG NO: 0410011

SUPERSEDED BY:

SUPERSEDES: NOTE 1

MODEL: 150

REV: B

PAGE: 17.2

FORM NO. 80-161

| CODE | REVISION | BY / DATE | CHK / APPD |
|---|---|---|---|
| B | REDRAWN NO CHG | [illegible] | [illegible] |

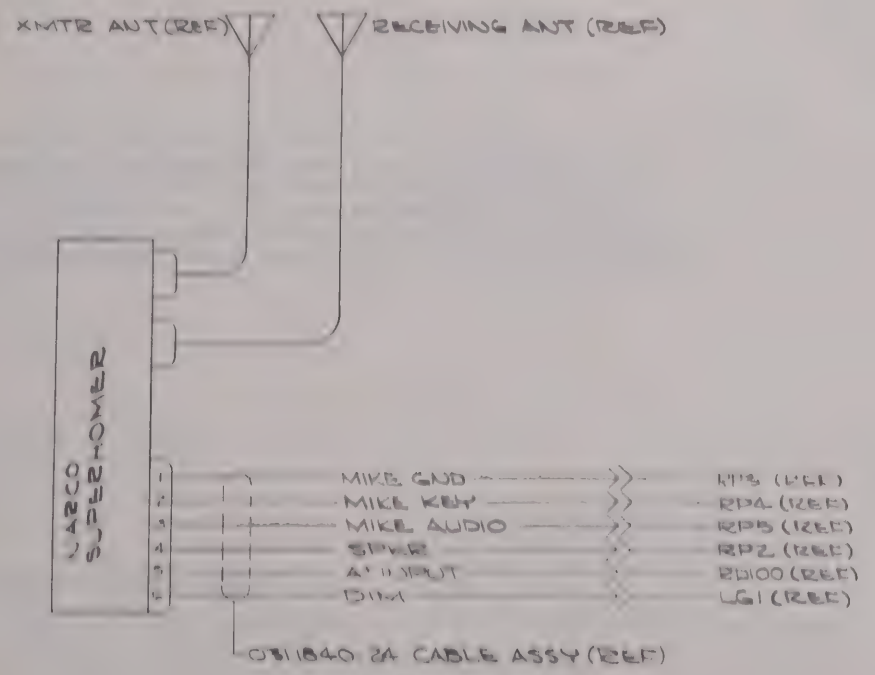


| WIRE CODE NO | GA | MATERIAL | CG | TERMINALS | | | SERIALS |
|---|---|---|---|---|---|---|---|

WIRE TABLE

CESSNA AIRCRAFT CO COMMERCIAL AIRCRAFT DIVISION WICHITA KANSAS

| | | | |
|---|---|---|---|
| DRAWN | [illegible] | [illegible] | WIRING DIAGRAM — SUPERHOMER |
| CHECK | [illegible] | [illegible] | |

Cessna.

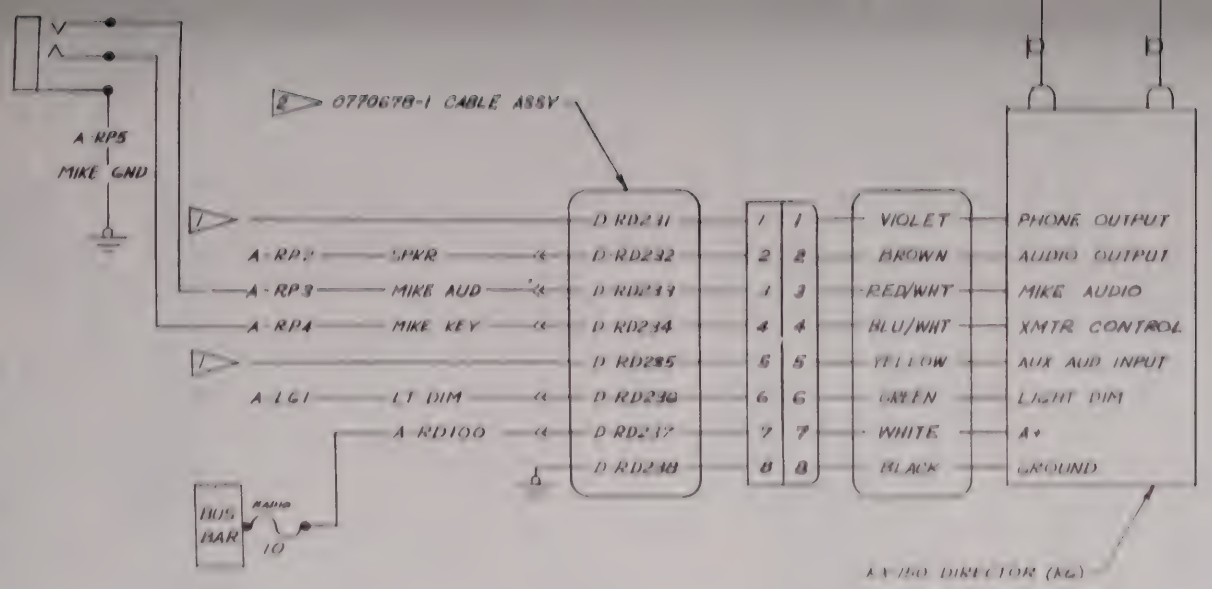


NOTES:

1. END OF WIRE SHALL BE SLEEVED AND TIED INTO CABLE UNTIL USED.
2. CABLE ASSEMBLY & SCHEMATIC SAME AS MODEL 182. FOR WIRE SIZES & CODING INSTRUCTIONS SEE 0770610 PAGE 17.8.

| WIRE CODE NO | GA | MATERIAL | LG | TERMINALS | | SERIALS |
|---|---|---|---|---|---|---|

WIRE TABLE

CESSNA AIRCRAFT CO. COMMERCIAL AIRCRAFT DIVISION WICHITA KANSAS

| | NAME | DATE |
|---|---|---|
| DRAWN | SPRIGGS | 10-5-62 |
| GROUP | PARSONS | 12-13-62 |
| CHECK | R. Stuck | 10-31-62 |
| PROJ | [illegible] | 10-25-62 |

TITLE: WIRING DIAGRAM — KING KX-150 DIRECTOR (OPT)

Cessna.

DWG NO 0410011

SUPERSEDED BY | SUPERSEDES | MODEL 150 | REV | PAGE 17.4

| ITEM NO | PART NO. | DESCRIPTION | INSTALLED ON |
|---|---|---|---|

EQUIPMENT TABLE

FORM NO 80-161

# TABLE OF CONTENTS

## 1964 SERIALS
## 15060088 & ON


| NO. | TITLE | DATE ISSUED | REV |
|---|---|---|---|
| .1 | Wiring Diagram - Radio Audio, Power & Lighting | 6-28-65 | A |
| .1 | Wiring Diagram - King KY-95, KY-95E | | |
| 5.1 | Wiring Diagram - King KX-150 | 12-24-63 | Inac. |
| 5.2 | King KX-150A | 2-25-65 | A |
| 6.1 | Wiring Diagram - Narco Mark IV Superhomer | | |
| 7.2 | Wiring Diagram - Narco Mark 12 | 5-6-65 | Inac. |
| 8.1 | Cessna Nav-Comm 300 (ARC Type 514A) | 3-17-64 | A |
| 8.2 | Cessna Comm 300 (ARC Type 524A) | 8-14-64 | NC |
| | Cessna ADF 300 (ARC Type 521A) | 5-6-65 | Inac. |
| 10.1 | Wiring Diagram - King KA-10 Audio Isolation Amplifier | 3-17-64 | |
| 11.1 | Wiring Diagram-Cessna Nav-Com 300R (ARC Type (ARC Type 514R) | 4-28-65 | A |
| 12 | Wiring Diagram - Cessna ADF 300 (ARC Type 521B) | 10-18-65 | A |
| 13.1 | Wiring Diagram - Cessna Nav-Comm 300 (ARC (ARC Type 516A) | 4-28-65 | NC |
| 14.1 | Mkr Bcn Cessna Nav/Omni 300 (ARC Type 525A) | 4-28-65 | NC |
| 16 | Wiring Diagram - Transmitter Selector Switch & Muting Relay | 5-6-65 | NC |
| 17.1 | Wiring Diagram-Cessna Nav/Omni 300 (ARC Type 525A) | 4-28-65 | NC |
| 20.1 | Wiring Diagram - Cessna Mkr Bcn 300 (ARC Type R-502B) | 8-20-65 | A |
| 21.1 | Wiring Diagram - Narco Mark 12 | 5-6-65 | NC |
| 22.1 | W. D. -King KX-160E Nav/Com | 8-9-65 | NC |
| 23 | Wiring Diagram-Bendix ADF-T-12C | 8-30-65 | NC |
| 1 | Cessna Nav-O-Matic 200 | 1-29-65 | A |

(S.R. 4090) ☒

| CHG LET | REVISION | BY DATE | CHK APPD |
|---|---|---|---|
| | | | |

NOTES:
1. WIRES SHALL BE OF SUFFICIENT LENGTH TO CONNECT WITH ALL POSSIBLE RADIO COMBINATIONS.
2. WIRE MATERIAL PER S-1460

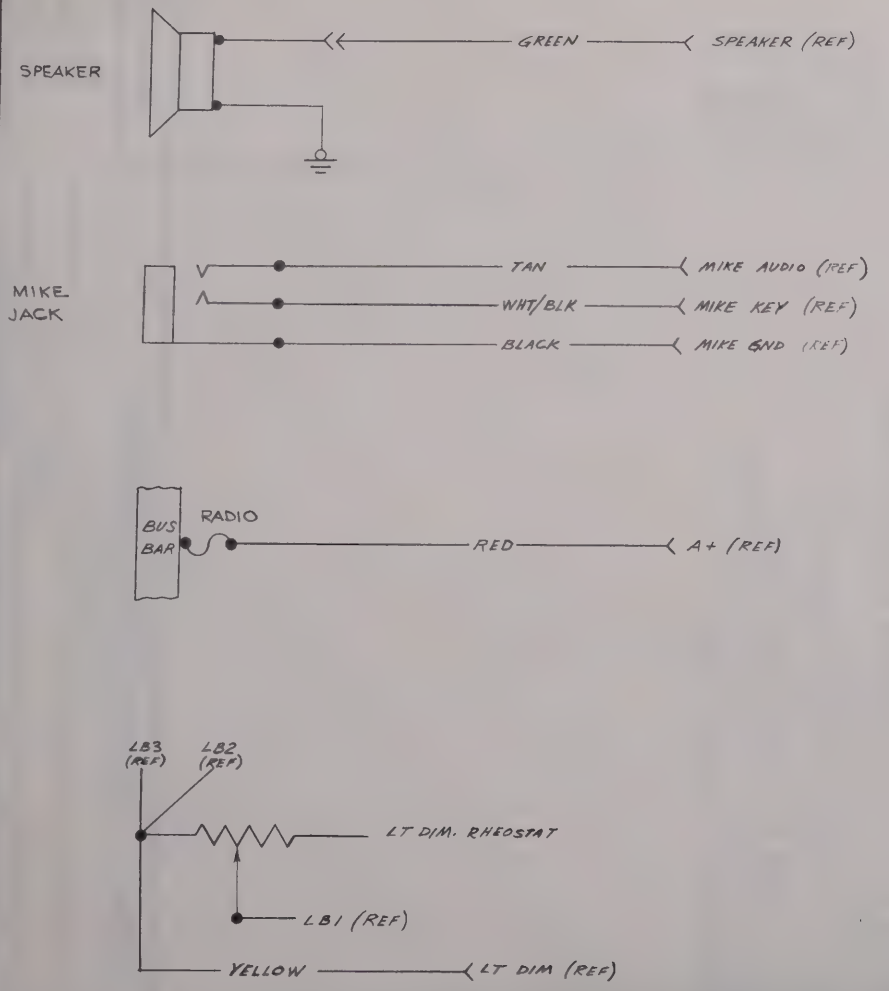


| WIRE CODE NO. | GA | MATERIAL | LG | TERMINALS | | | SERIALS |
|---|---|---|---|---|---|---|---|
| YELLOW | 18 | -18-4 | | SOLDER | S-341-2 | | |
| RED | 16 | -16-2 | | SOLDER | S-341-1 | | |
| BLACK | 22 | -22-0 | | SOLDER | S-341-2 | | |
| WHT/BLK | 22 | -22-9-0 | | SOLDER | S-341-2 | | |
| TAN | 22 | -22-10 | | SOLDER | S-341-2 | | |
| GREEN | 20 | -20-5 | | S 341-2 | S-341-2 | | |

2 WIRE TABLE

CESSNA AIRCRAFT CO. COMMERCIAL AIRCRAFT DIVISION, WICHITA, KANSAS

| | NAME | DATE |
|---|---|---|
| DRAWN | ALTHER | 6-25-63 |
| GROUP | PARSONS | 8-9-63 |
| CHECK | R. H. K. | 8-8-63 |
| PROJ | [signature] | 8-9-63 |

TITLE
WIRING DIAGRAM — RADIO AUDIO, POWER, & LIGHTING

Cessna.

DWG NO 0470400

| ITEM NO | PART NO | DESCRIPTION | INSTALLED ON |
|---|---|---|---|

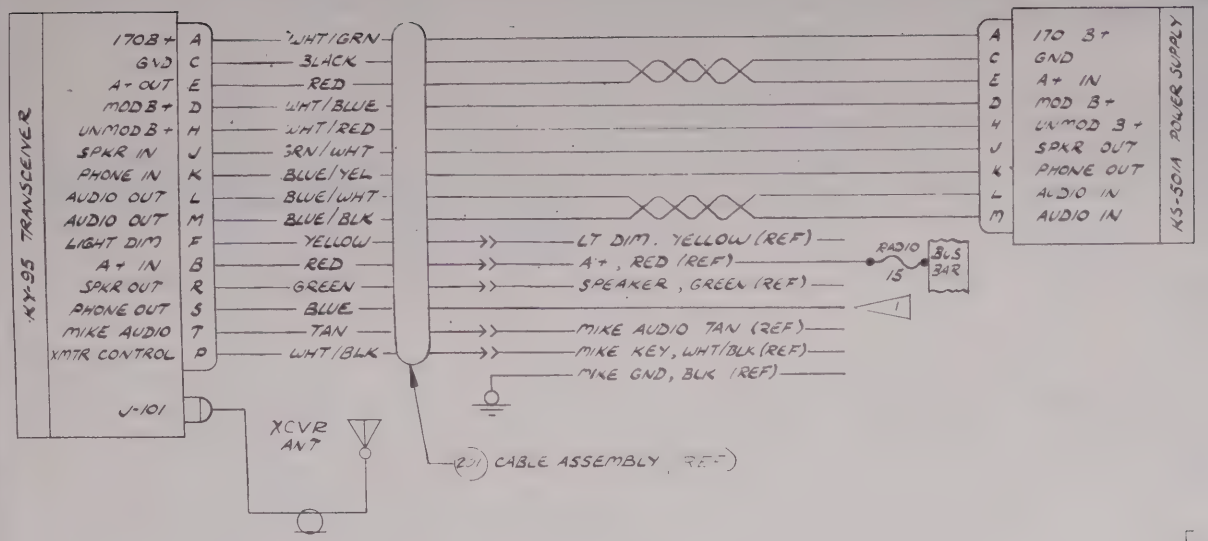


NOTES.

1. END OF WIRE SHALL BE SLEEVED AND TIED INTO CABLE UNTIL USED
2. WIRE MATERIAL PER S-1460

| WIRE CODE NO. | GA | MATERIAL | LG | TERMINALS | | | SERIALS |
|---|---|---|---|---|---|---|---|
| WHT/GRN | 22 | -22-9-5 | | SOLDER | SOLDER | | |
| BLACK | 16 | -16-0 | | | | | |
| RED | 16 | -16-2 | | | | | |
| WHT/BLU | 22 | -22-9-6 | | | | | |
| WHT/RED | 22 | -22-9-2 | | | | | |
| GRN/WHT | 20 | -20-5-9 | | | | | |
| BLUE/YEL | 22 | -22-6-4 | | | | | |
| BLUE/WHT | 22 | -22-6-9 | | | | | |
| BLUE/BLK | 22 | -22-6-0 | | SOLDER | | | |
| YELLOW | 18 | 18-4 | | S-341-2 | | | |
| RED | 16 | -16-2 | | S-341-2 | | | |
| GREEN | 20 | -20-5 | | S-341-2 | SOLDER | | |
| BLUE | 22 | -22-6 | | SOLDER | 1 | | |
| TAN | 22 | -22-10 | | S-341-2 | SOLDER | | |
| WHT/BLK | 22 | -22-9-0 | | S-341-2 | SOLDER | | |

2

WIRE TABLE

CESSNA AIRCRAFT CO., COMMERCIAL AIRCRAFT DIVISION, WICHITA, KANSAS

| | NAME | DATE |
|---|---|---|
| DRAWN | J ROBERTS | 6-27-63 |
| GROUP | PARSONS | 8-9-63 |
| CHECK | R. Stuck | 8-8-63 |
| PROJ | [illegible] | 8-9-63 |

TITLE: WIRING DIAGRAM — KING KY-95 & KY95E

Cessna.

DWG NO 0470400

| SUPERSEDED BY | SUPERSEDES | MODEL 150 | REV | PAGE 2.1.1 |
|---|---|---|---|---|

| ITEM NO | PART NO. | DESCRIPTION | INSTALLED ON |
|---|---|---|---|

EQUIPMENT TABLE

FORM NO. 80-161

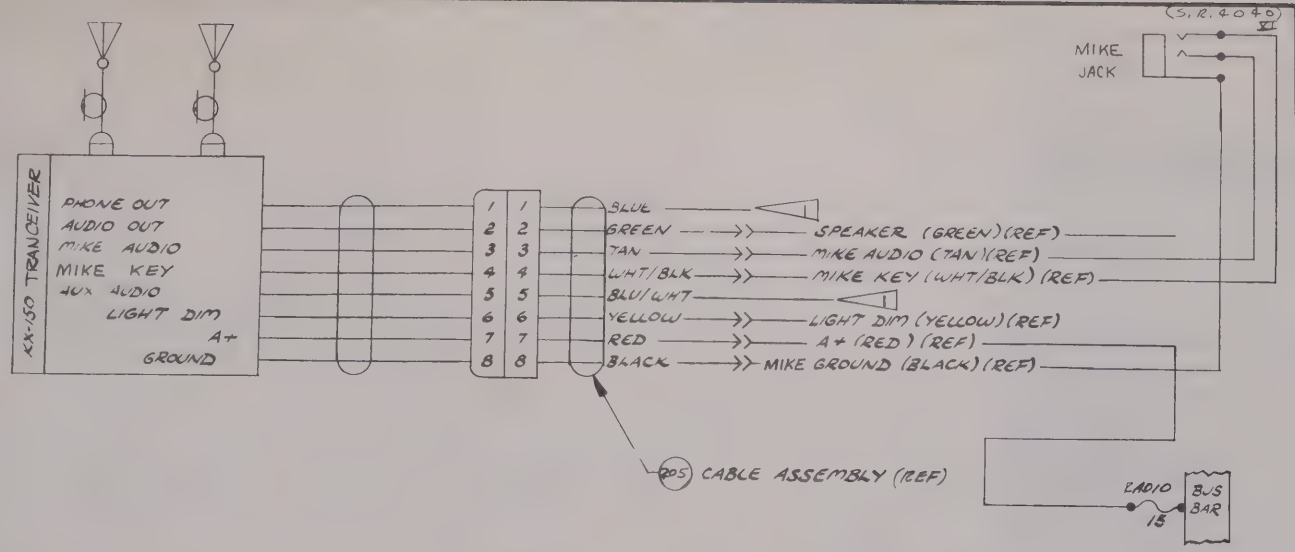


| CHG LET | REVISION | BY / DATE | CHK / APPD |
|---|---|---|---|
| | | | |

Inactive Serials: 15060465 & on
17251371 & on
12-14-63
E. Spriggs
RRS
R - ns
ns

NOTE:
1. END OF WIRE SHALL BE SLEEVED AND TIED INTO CABLE UNTILL USED
2. WIRE MATL PER S-1460

| WIRE CODE NO. | GA | MATERIAL | LG | TERMINALS | | | SERIALS |
|---|---|---|---|---|---|---|---|
| BLUE | 22 | -22-6 | | SOLDER | 1 | | |
| GREEN | 20 | -20-5 | | 1 | SOLDER | | |
| TAN | 22 | -22-10 | | S-341-2 | SOLDER | | |
| WHT/BLK | 22 | -22-9-0 | | S-341-2 | SOLDER | | |
| BLU/WHT | 22 | -22-6-9 | | SOLDER | 1 | | |
| YELLOW | 18 | -18-4 | | S-341-2 | SOLDER | | |
| RED | 16 | -16-2 | | S-341-1 | SOLDER | | |
| BLACK | 16 | -16-0 | | S-341-1 | SOLDER | | |

2 WIRE TABLE

CESSNA AIRCRAFT CO. COMMERCIAL AIRCRAFT

| | NAME | DATE |
|---|---|---|
| DRAWN | J. ROBERTS | 6-27-63 |
| GROUP | PARSONS | 8-9-63 |
| CHECK | R. Fluck | 8-7-63 |
| PROJ | J. Hattle | 8-9-63 |

TITLE
WIRING DIAGRAM — KING KX-150

Cessna.

DWG NO 0470400

| ITEM | PART NO. | DESCRIPTION | INSTALLED ON |
|---|---|---|---|

| | | | |
|---|---|---|---|
| | KX-150A: ADD NOTE 3 ADD KX-150BE TO TITLE (SR 4731) | 1-22-63 | HTW ns |

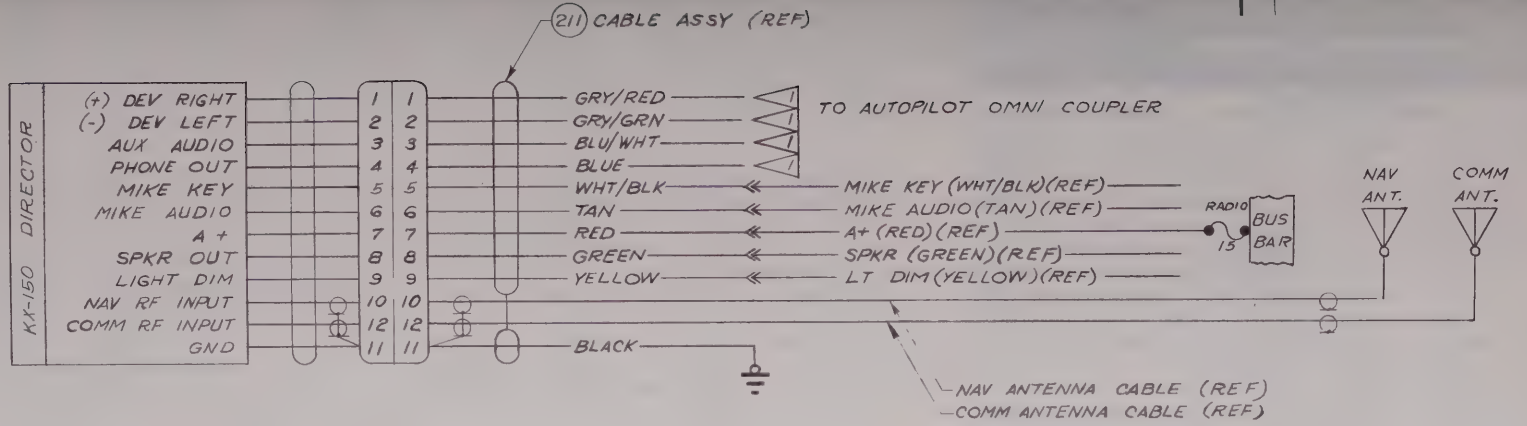


NOTES:

1. WIRES NOT USED SHALL BE SLEEVED AND TIED INTO BUNDLE.
2. WIRE MATERIAL PER S-1460.
3. THE KX-150B & KX-150BE ARE ELECTRICALLY & MECHANICALLY INTERCHANGEABLE WITH KX-150A & KX-150AE.

| WIRE CODE NO. | GA | MATERIAL | LG | TERMINALS | | SERIALS |
|---|---|---|---|---|---|---|
| GRY/RED | 22 | -22-8-2 | | SOLDER | | |
| GRY/GRN | 22 | -22-8-5 | | | | |
| BLU/WHT | 22 | -22-6-9 | | | | |
| BLUE | 22 | -22-6 | | | | |
| WHT/BLK | 22 | -22-9-0 | | | S-341-2 | |
| TAN | 22 | -22-10 | | | S-341-2 | |
| RED | 16 | -16-2 | | | S-341-1 | |
| GREEN | 20 | -20-5 | | | S-341-2 | |
| YELLOW | 18 | -18-4 | | | S-341-2 | |
| BLACK | 16 | -16-0 | | SOLDER | S 1367-2-10 | |

2 WIRE TABLE

| ITEM NO | PART NO | DESCRIPTION | INSTALLED ON |
|---|---|---|---|

EQUIPMENT TABLE

CESSNA AIRCRAFT CO., COMMERCIAL AIRCRAFT DIVISION, WICHITA, KANSAS

| | NAME | DATE |
|---|---|---|
| DRAWN | SPRIGGS | 12-16-63 |
| GROUP | PARSONS | 12-23-63 |
| CHECK | R. Stark | 12-20-63 |
| PROJ | [illegible] | 12-24-63 |

TITLE: WIRING DIAGRAM — KING KX-150B & KX-150BE

Cessna.

DWG NO 0470400

| SUPERSEDED BY | SUPERSEDES | MODEL | REV | PAGE |
|---|---|---|---|---|
| | 2.5.1 | 150 | A | 2.5.2 |

FORM NO. 80-161

NOTES: (S.R. 4080) XI

1. END OF WIRE SHALL BE SLEEVED AND TIED INTO CABLE UNTIL USED
2. VENDOR SUPPLIED WIRES

| CHG LET | REVISION | BY / DATE | CHK / APPD |
|---|---|---|---|
| | | | |

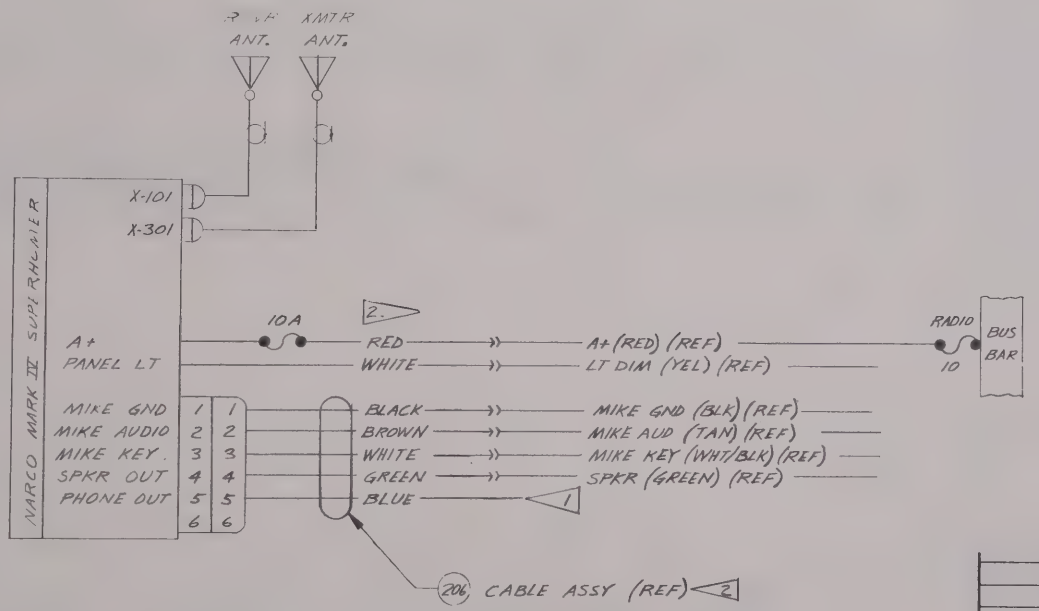


| WIRE CODE NO. | GA | MATERIAL | LG | TERMINALS | | SERIALS |
|---|---|---|---|---|---|---|
| RED | | 2 | | S-341 2 | | |
| WHT | | | | | | |
| BLK | | | | | | |
| BRN | | | | | | |
| WHT | | | | | | |
| GRN | | | | S-341-2 | | |
| BLU | | 2 | | 1 | | |

WIRE TABLE

CESSNA AIRCRAFT CO., COMMERCIAL AIRCRAFT DIVISION, WICHITA, KANSAS

| | NAME | DATE |
|---|---|---|
| DRAWN | WITHER | 6-27-63 |
| GROUP | PARSONS | 8-9-63 |
| CHECK | C. Stuck | 8-7-63 |
| PROJ | [illegible] | 8-9-63 |

TITLE: WIRING DIAGRAM — NARCO MARK IV SUPERHOMER

Cessna.

DWG NO 0470400

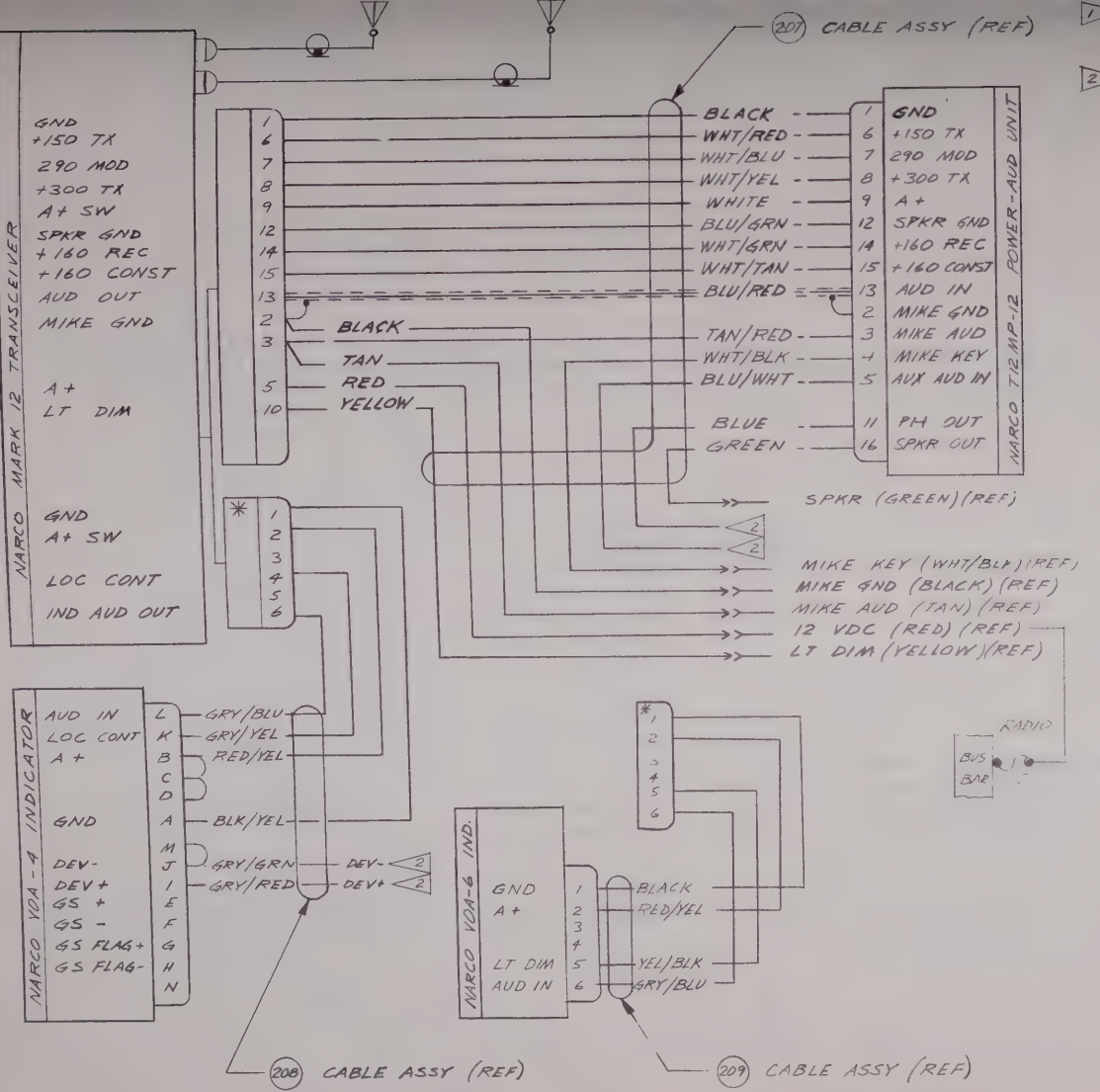


1 WIRE MATERIAL PER S-1460 UNLESS OTHERWISE NOTED

2 END OF WIRE SHALL BE SLEEVED AND TIED INTO CABLE UNTIL USED

Inactive (SER. 15061533) EON 4-28-65 JGB 5-4-65 NPW 5-5-65 RRS 5-5-65 DKM 1-6-63 JPB

| WIRE CODE NO. | GA | MATERIAL | LG | TERMINALS | | SERIALS |
|---|---|---|---|---|---|---|
| BLACK | 22 | -22-0 | 15 | SOLDER | SOLDER | |
| RED/YEL | 22 | -22-2-4 | 15 | | SOLDER | |
| YEL/BLK | 18 | -18-4-0 | 15 | | SOLDER | |
| GRY/BLU | 22 | -22-8-6 | 15 | | SOLDER | |
| GREEN | 20 | -20-5 | 140 | | S-341-2 | |
| GRY/BLU | 22 | -22-8-6 | 15 | | SOLDER | |
| GRY/YEL | 22 | -22-8-4 | 15 | | SOLDER | |
| GRY/GRN | 22 | -22-8-5 | 15 | | 2 | |
| GRY/RED | 22 | 22-8-2 | 15 | | 2 | |
| RED/YEL | 22 | 22-2-4 | 15 | | SOLDER | |
| BLK/YEL | 22 | -22-0-4 | 15 | | SOLDER | |
| BLACK | 22 | 22-0 | 140 | | S-341-2 | |
| TAN | 22 | -22-10 | 140 | | S-341-2 | |
| WHT/TAN | 22 | -22-9-10 | 120 | | SOLDER | |
| WHT/GRN | 22 | -22-9-5 | 120 | | SOLDER | |
| BLU/RED | 22 S | S-1461-22-6-2 | 120 | | SOLDER | |
| BLU/GRN | 22 | -22-6-5 | 120 | | SOLDER | |
| BLUE | 22 | 22-6 | 140 | | 2 | |
| WHT/YEL | 22 | -22-9-4 | 120 | | SOLDER | |
| WHT/BLU | 22 | -22-9-6 | 120 | | SOLDER | |
| WHT/RED | 22 | -22-9-2 | 120 | | SOLDER | |
| BLU/WHT | 22 | -22-6-9 | 140 | | 2 | |
| WHT/BLK | 22 | -22-9-0 | 140 | | S-341-2 | |
| TAN/RED | 22 | -22-10-2 | 120 | | SOLDER | |
| YELLOW | 18 | -18-4 | 140 | | S-341-2 | |
| RED | 16 | -16-2 | 140 | | S-341-1 | |
| BLACK | 16 | -16-0 | 120 | | SOLDER | |
| WHITE | 14 | | 120 | SOLDER | SOLDER | |

1 WIRE TABLE

CESSNA AIRCRAFT CO. COMMERCIAL AIRCRAFT DIVISION, WICHITA, KANSAS

| | NAME | DATE |
|---|---|---|
| DRAWN | ALTHER | 6-25-63 |
| GROUP | PARSONS | 6-4-63 |
| CHECK | R. Stuck | 8-7-63 |
| PROJ | [illegible] | 8-9-63 |

TITLE: WIRING DIAGRAM — NARCO MARK 12

Cessna.

DWG NO. 0470400

| SUPERSEDED BY | SUPERSEDES | MODEL | REV. | PAGE |
|---|---|---|---|---|
| 0470400 Pg. 2.21.1 | | 150 | | 2.7.2 |

| ITEM NO | PART NO. | DESCRIPTION | INSTALLED ON |
|---|---|---|---|

EQUIPMENT TABLE

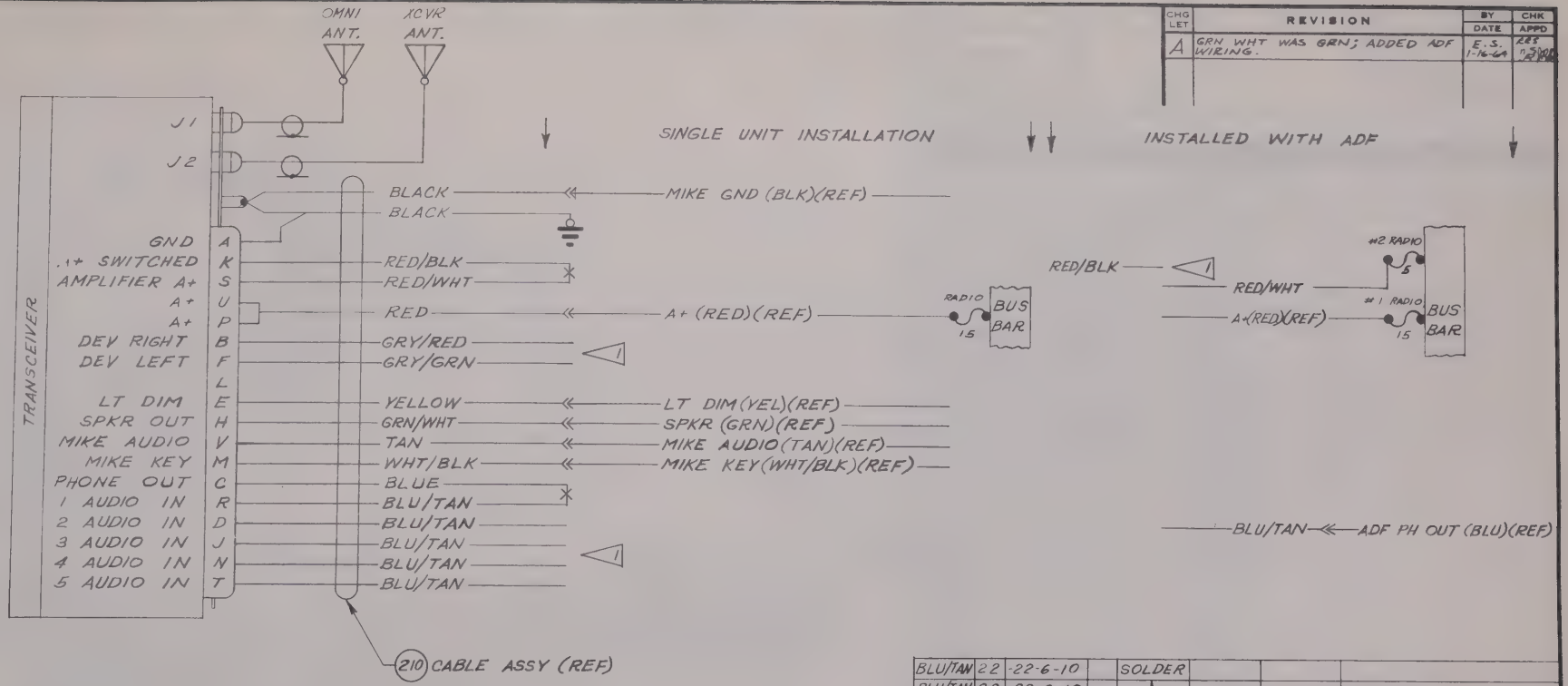


| CHG LET | REVISION | BY / DATE | CHK / APPD |
|---|---|---|---|
| A | GRN WHT WAS GRN; ADDED ADF WIRING. | E.S. 1-16-64 | 225 1-21-64 |

NOTES:
1. WIRES NOT USED SHALL BE SLEEVED AND TIED INTO BUNDLE.
2. WIRE MATERIAL PER S-1460.

| WIRE CODE NO | GA | MATERIAL | LG | TERMINALS | | | SERIALS |
|---|---|---|---|---|---|---|---|
| BLU/TAN | 22 | -22-6-10 | | SOLDER | | | |
| BLU/TAN | 22 | -22-6-10 | | | | | |
| BLU/TAN | 22 | -22-6-10 | | | | | |
| BLU/TAN | 22 | -22-6-10 | | | | | |
| BLU/TAN | 22 | 22-6-10 | | | | | |
| BLUE | 22 | -22-6 | | | S-1370-1 | | |
| WHT/BLK | 22 | -22-9-0 | | | S-341-2 | | |
| TAN | 22 | -22-10 | | | | | |
| GRN/WHT | 20 | -20-5 9 | | | | | |
| YELLOW | 18 | -18-4 | | | S-341-2 | | |
| GRY/GRN | 22 | -22-8-5 | | | | | |
| GRY/RED | 22 | -22-8-2 | | | | | |
| RED | 16 | -16-2 | | | S-341-1 | | |
| RED/BLK | 18 | -18-2-0 | | | S-1370-1 | | |
| RED/WHT | 18 | 18 2-9 | | | | | |
| BLACK | 16 | -16-0 | | | S-1367-1-10 | | |
| BLACK | 22 | -22-0 | | SOLDER | S-341-2 | | |

2 WIRE TABLE

CESSNA AIRCRAFT CO. COMMERCIAL AIRCRAFT DIVISION, WICHITA KANSAS

| | NAME | DATE |
|---|---|---|
| DRAWN | SPRIGGS | 10-15-63 |
| GROUP | JARSONS | 10-18-63 |
| CHECK | R. Huck | 10-15-63 |
| PROJ | | 10-11-63 |

TITLE: WIRING DIAGRAM — CESSNA NAV-COMM 300 (ARC TYPE 514A)

Cessna.

DWG NO. 0470400

| PART NO | DESCRIPTION | INSTALLED ON |
|---|---|---|

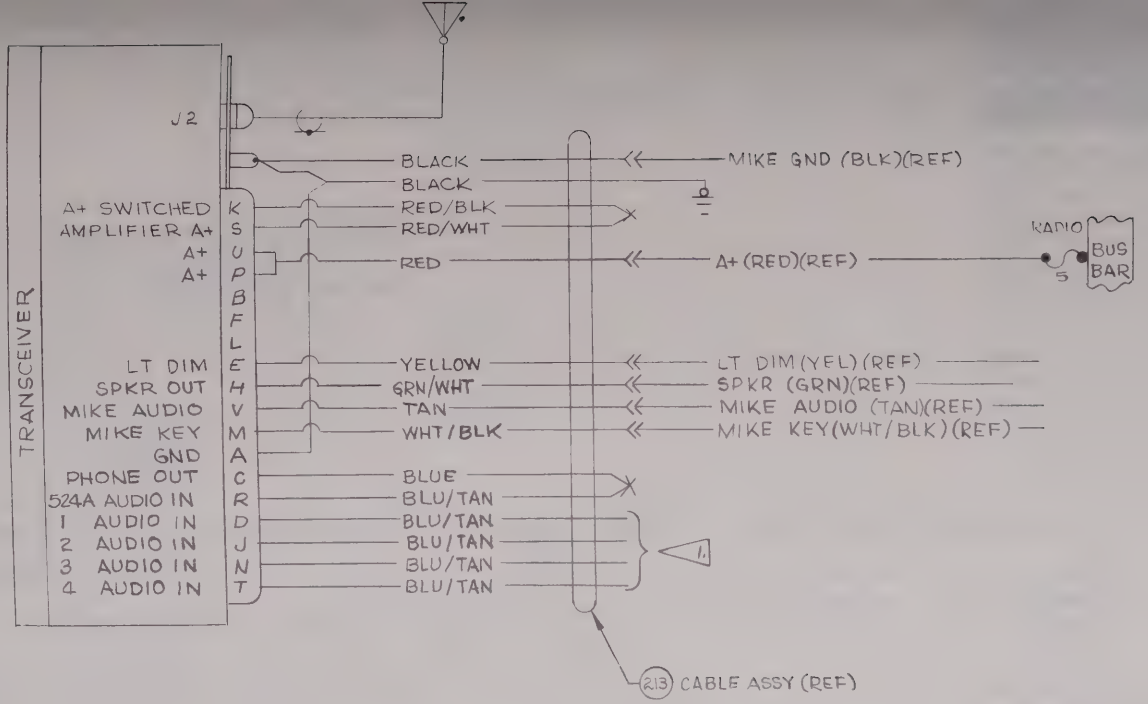


| WIRE CODE NO | GA | MATERIAL | NG | TERMINALS | | SERIAL |
|---|---|---|---|---|---|---|
| BLU/TAN | 22 | -22-6-10 | | SOLDER | | |
| BLU/TAN | 22 | -22-6-10 | | | | |
| BLU/TAN | 22 | -22-6-10 | | | | |
| BLU/TAN | 22 | -22-6-10 | | | | |
| BLU/TAN | 22 | -22-6-10 | | | COMMON TO BLUE | |
| BLUE | 22 | -22-6 | | | S1570-1 | |
| BLACK | 22 | -22-C | | | S-341-2 | |
| WHT/BLK | 22 | -22-9-0 | | | S-341-2 | |
| TAN | 22 | -22-10 | | | S-341-2 | |
| GRN/WHT | 22 | 20 5-9 | | | S-341-2 | |
| YELLOW | 18 | -18-4 | | | S-341-2 | |
| RED | 16 | -16-2 | | | S-341-1 | |
| RED/WHT | 18 | -18-2-9 | | | COMMON TO RED/BLK | |
| RED/BLK | 18 | -18-2-0 | | | S-1390-1 | |
| BLACK | 16 | -16-0 | | SOLDER | S-1367-210 | |

2 WIRE TABLE

NOTES:
1. WIRES NOT USED SHALL BE SLEEVED AND TIED INTO BUNDLE.
2. WIRE MATERIAL PER S-1460

| ITEM NO | PART NO. | DESCRIPTION | INSTALLED ON |
|---|---|---|---|

EQUIPMENT TABLE

CESSNA AIRCRAFT CO. COMMERCIAL AIRCRAFT DIVISION, WICHITA, KANSAS

| | NAME | DATE |
|---|---|---|
| DRAWN | COOK | 1-9-64 |
| GROUP | [illegible] | [illegible] |
| CHECK | R. Stuck | 8-11-64 |
| PROJ | [illegible] | [illegible] |

WIRING DIAGRAM — CESSNA COMM 300 (ARC TYPE 524 A)

Cessna.

DWG NO C470406

SUPERSEDED BY | SUPERSEDES | MODEL 150 | REV | PAGE 2.8.2

| CHG LET | REVISION | BY / DATE | CHK / APPD |
|---|---|---|---|
| | | | |

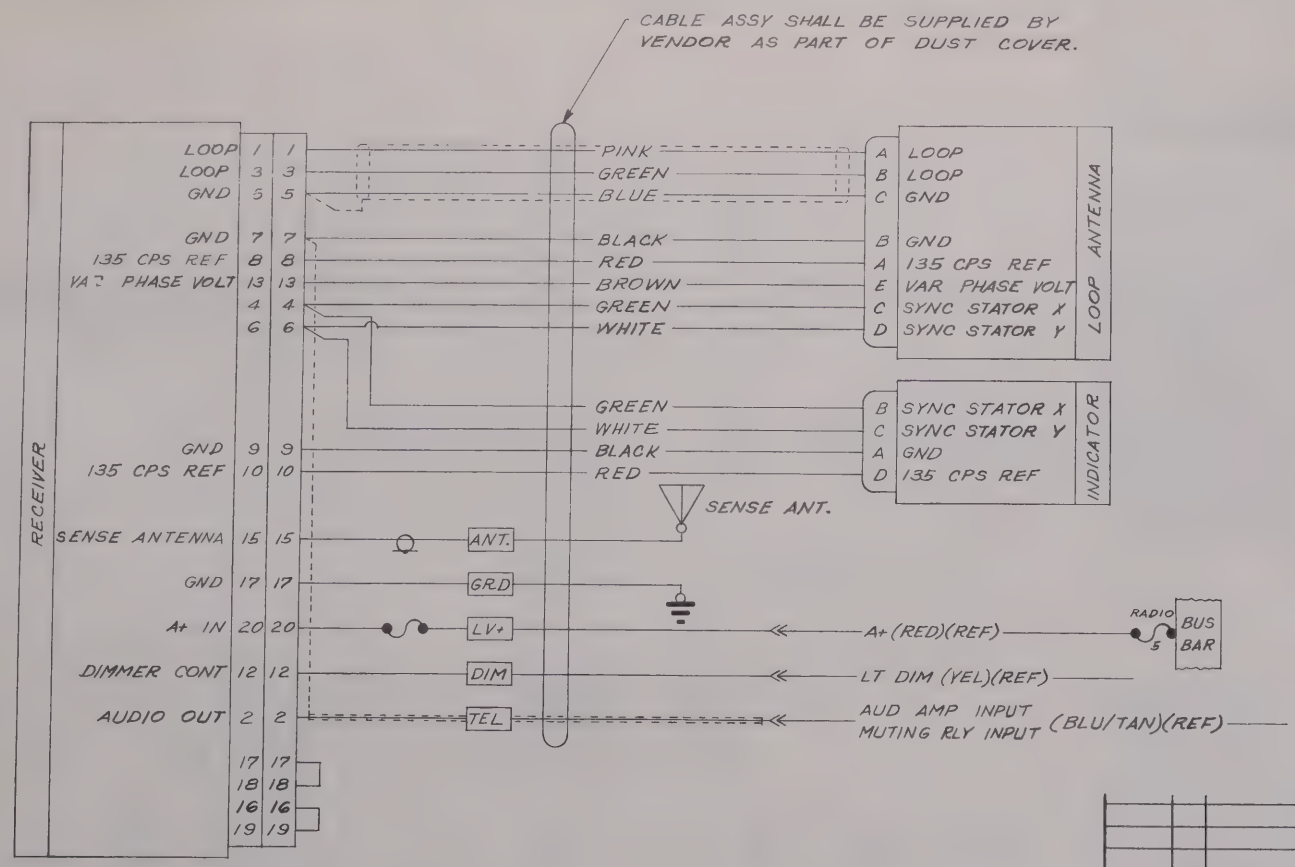


INACTIVE 15060773 & ON

8-25-64 LPB
4-19-65 KEW
4-30-65 RRS
4-30-65 DKM

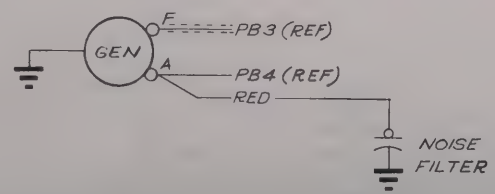


| WIRE CODE NO. | GA | MATERIAL | LG | TERMINALS | | SHIELD TERMINALS | SERIALS |
|---|---|---|---|---|---|---|---|
| RED | 16 | S-1460-16-2 | | S-1367-2-12 | S-1367-2-8 | | |
| ANT. | | | | S-1367-1-10 | | S-1367-2-10 | |
| GRD | | | | S-1367-1-10 | | | |
| LV+ | | | | S-341-2 | | | |
| DIM | | | | S-341-2 | | | |
| TEL | | | | S-341-2 | | | |

WIRE TABLE

CESSNA AIRCRAFT CO. COMMERCIAL AIRCRAFT DIVISION, WICHITA, KANSAS

| | NAME | DATE |
|---|---|---|
| DRAWN | SPRIGGS | 10-9-63 |
| GROUP | PARSONS | 3-11-64 |
| CHECK | R. Stuck | 3-9-64 |
| PROJ | [illegible] | 3-13-64 |

TITLE
WIRING DIAGRAM — CESSNA ADF 300- (ARC TYPE 521A)

Cessna.

DWG NO. 0470400

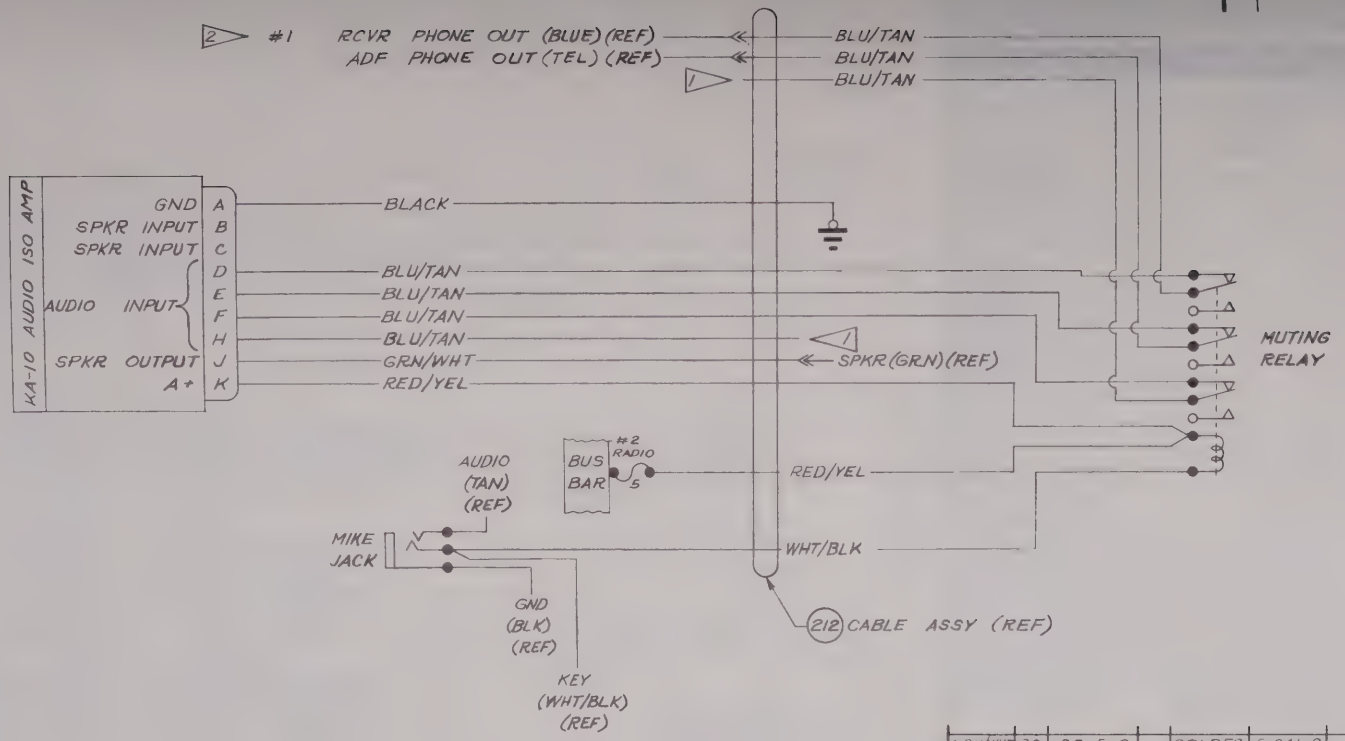


NOTES:
1. WIRES NOT USED SHALL BE SLEEVED AND TIED INTO BUNDLE.
2. SPKR OUTPUT OF #1 RCVR SHALL BE GROUNDED THROUGH A 5Ω, 5W RESISTOR.
3. WIRE MATERIAL PER S-1460.

| WIRE CODE NO. | GA | MATERIAL | LG | TERMINALS | | SERIALS |
|---|---|---|---|---|---|---|
| GRN/WHT | 20 | -20-5-9 | | SOLDER | S-341-2 | |
| BLU/TAN | 22 | -22-6-10 | | | S-341-2 | |
| | | | | | S-341-2 | |
| | | | | | SOLDER | |
| BLU/TAN | 22 | -22-6-10 | | | | |
| RED/YEL | 22 | -22-2-4 | | | | |
| RED/YEL | 22 | -22-2-4 | | | | |
| WHT/BLK | 22 | -22-9-0 | | | SOLDER | |
| BLACK | 22 | -22-0 | | SOLDER | S-1367-1-10 | |

3 WIRE TABLE

CESSNA AIRCRAFT CO COMMERCIAL AIRCRAFT DIVISION WICHITA KANSAS

| | NAME | DATE |
|---|---|---|
| DRAWN | SPRIGGS | 1-22-64 |
| GROUP | PARSONS | 3-11-64 |
| CHECK | R Stuck | 3-9-64 |
| PROJ | [illegible] | 3-13-64 |
| | [illegible] | 3-11-64 |

TITLE: WIRING DIAGRAM — KING KA-10 AUDIO ISOLATION AMPLIFIER

Cessna.

DWG NO: 04 70400

| SUPERSEDED BY | SUPERSEDES | MODEL: | REV: | PAGE: |
|---|---|---|---|---|
| | | 150 | | 2.10.1 |

| ITEM NO | PART NO. | DESCRIPTION | INSTALLED ON |
|---|---|---|---|

EQUIPMENT TABLE

FORM NO. 80-161

(SR4438)

| CHG LET | REVISION | BY / DATE | CHK / APPD |
|---|---|---|---|
| A | ADD NOTE 3 & DETAIL A. ADD 515R TO TITLE (SR4662) | 4-16-65 | |

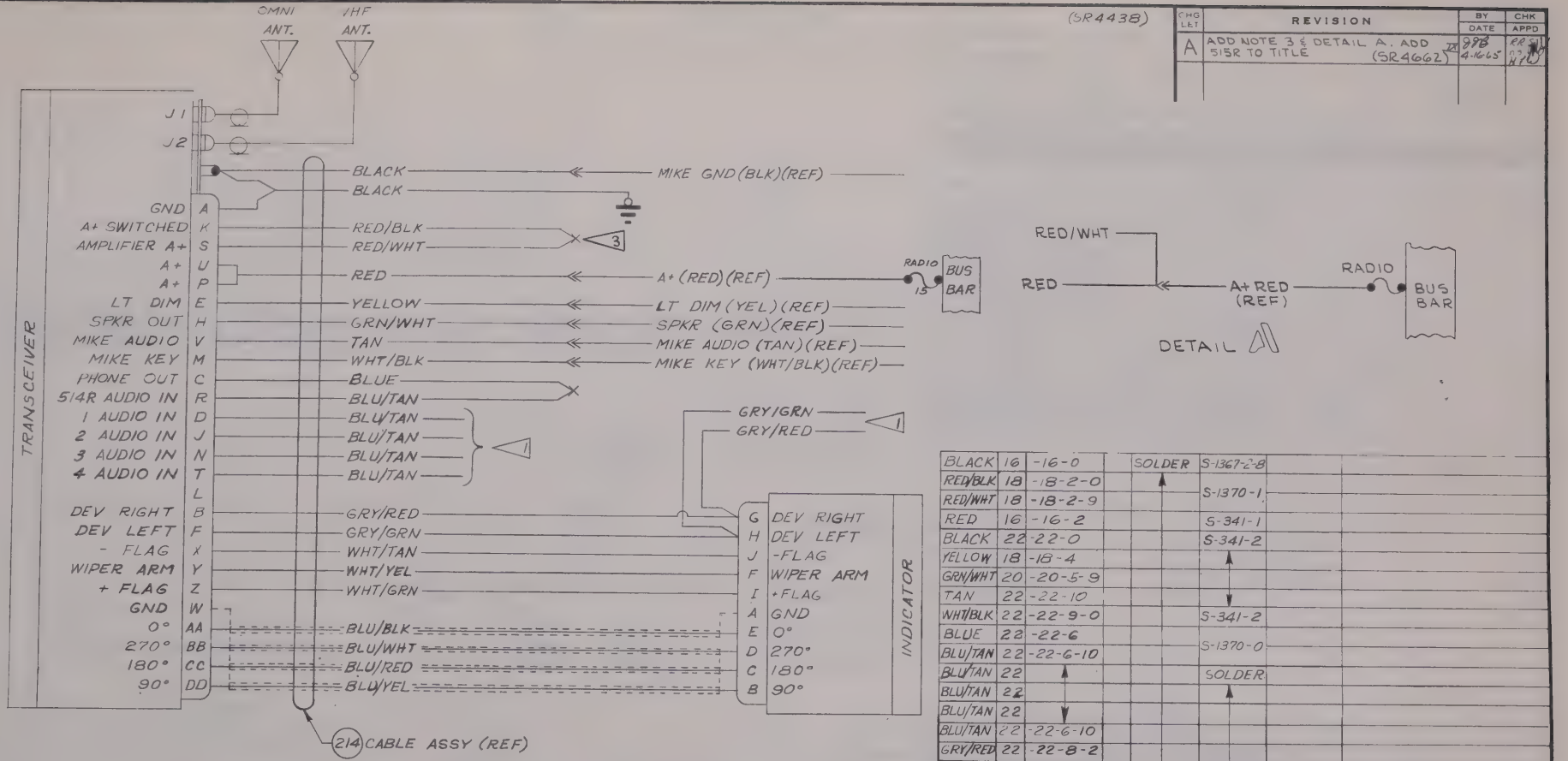


NOTES:

1. WIRES NOT USED SHALL BE SLEEVED AND TIED INTO BUNDLE.
2. WIRE MATERIAL PER S-1460 EXCEPT AS NOTED.
3. WHEN THIS SET IS INSTALLED AS A SINGLE RADIO, CONNECT PINS S & K TOGETHER AS SHOWN. WHEN INSTALLED IN CONJUNCTION WITH ANOTHER RADIO SET AS AN ADF OR A NAV-OMNI, CONNECT PIN S AS SHOWN IN DETAIL "A".

| WIRE CODE NO. | GA | MATERIAL | LG | TERMINALS | | | SERIALS |
|---|---|---|---|---|---|---|---|
| BLACK | 16 | -16-0 | | SOLDER | S-1367-2-8 | | |
| RED/BLK | 18 | -18-2-0 | | | S-1370-1 | | |
| RED/WHT | 18 | -18-2-9 | | | | | |
| RED | 16 | -16-2 | | | S-341-1 | | |
| BLACK | 22 | -22-0 | | | S-341-2 | | |
| YELLOW | 18 | -18-4 | | | | | |
| GRN/WHT | 20 | -20-5-9 | | | | | |
| TAN | 22 | -22-10 | | | | | |
| WHT/BLK | 22 | -22-9-0 | | | S-341-2 | | |
| BLUE | 22 | -22-6 | | | S-1370-0 | | |
| BLU/TAN | 22 | -22-6-10 | | | | | |
| BLU/TAN | 22 | | | | SOLDER | | |
| BLU/TAN | 22 | | | | | | |
| BLU/TAN | 22 | | | | | | |
| BLU/TAN | 22 | -22-6-10 | | | | | |
| GRY/RED | 22 | -22-8-2 | | | | | |
| GRY/GRN | 22 | -22-8-5 | | | | | |
| GRY/RED | 22 | -22-8-2 | | | | | |
| GRY/GRN | 22 | -22-8-5 | | | | | |
| WHT/TAN | 22 | -22-9-10 | | | | | |
| WHT/YEL | 22 | -22-9-4 | | | | | |
| WHT/GRN | 22 | -22-9-5 | | | | | |
| BLU/BLK | 22S | S-1461-22-6-0 | | | | | |
| BLU/WHT | 22S | S-1461-22-6-9 | | | | | |
| BLU/RED | 22S | S-1461-22-6-2 | | | | | |
| BLU/YEL | 22S | S-1461-22-6-4 | | SOLDER | SOLDER | | |

2 WIRE TABLE

CESSNA AIRCRAFT CO. COMMERCIAL AIRCRAFT DIVISION, WICHITA, KANSAS

| | NAME | DATE |
|---|---|---|
| DRAWN | SPRIGGS | 3-31-64 |
| GROUP | PARSONS | 6-2-64 |
| CHECK | R. Stack | 5-27-64 |
| PROJ | R. Sattler | 6-2-64 |

TITLE: WIRING DIAGRAM — CESSNA NAV-COMM 300R (ARC TYPE 514R & FIER)

Cessna

DWG NO 0470400

| | | | |
|---|---|---|---|
| A | BY REV: ADDED CHOKE & ADDED TO NOTE 2. ADD 33827 LOOP CABLE | SKH 9-10-65 | |

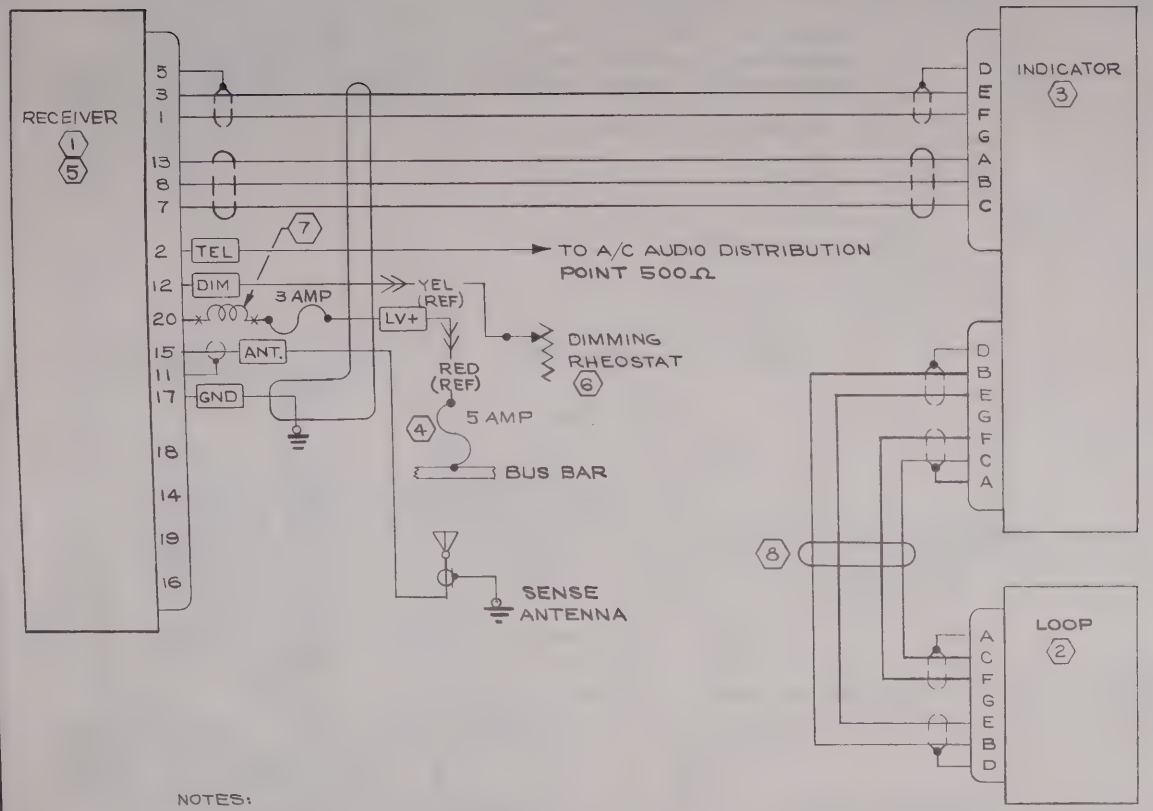


NOTES:

1. CONNECTIONS SHOWN ARE FOR TOP MOUNTED SENSE & BOTTOM MOUNTED LOOP ANTENNA.
2. ALL WIRES ARE VENDOR SUPPLIED WITH RCVR EXCEPT CHOKE IN CIRCUIT BETWEEN PIN 20 & FUSEHOLDER WHICH MUST BE ADDED ON INSTL IN ACFT.

| ITEM NO | PART NO | DESCRIPTION | INSTALLED ON |
|---|---|---|---|
| 8 | 33827 | LOOP CABLE (ARC) | |
| 7 | A-263 | CHOKE (CTAT) | |
| 6 | 0413126-5 | RHEOSTAT | |
| 5 | 28340-1400 | RCVR (WITH BFO) | (ARC R-521A-14) |
| 4 | S-1091-5 | FUSE | |
| 3 | 32680-0000 | INDICATOR (ARC) | (ARC IN-521B) |
| 2 | 32880-0100 | LOOP (ARC L-521B-10) | |
| 1 | 28340-1500 | RCVR (WITHOUT BFO) | (ARC R-521A-15) |

EQUIPMENT TABLE

| WIRE CODE NO | GA | MATERIAL | LG | TERMINALS | | SERIALS |
|---|---|---|---|---|---|---|

WIRE TABLE

CESSNA AIRCRAFT CO., COMMERCIAL AIRCRAFT DIVISION, WICHITA, KANSAS

| | NAME | DATE |
|---|---|---|
| DRAWN | BREEN | 8-5-64 |
| GROUP | H. Wiro | 4-16-65 |
| CHECK | [illegible] | 4-30-65 |
| PROJ | [illegible] | 4-30-65 |

TITLE: WIRING DIAGRAM — CESSNA ADF 300 (ARC TYPE 521B)

Cessna.

DWG NO 0470400

SUPERSEDED BY | SUPERSEDES 0470400 PAGE 2.9 | MODEL 150 | REV: A | PAGE: 2.12

FORM NO. 80-161

(SR 4662) II

| CHG LET | REVISION | BY DATE | CHK APPD |
|---|---|---|---|
| | | | |

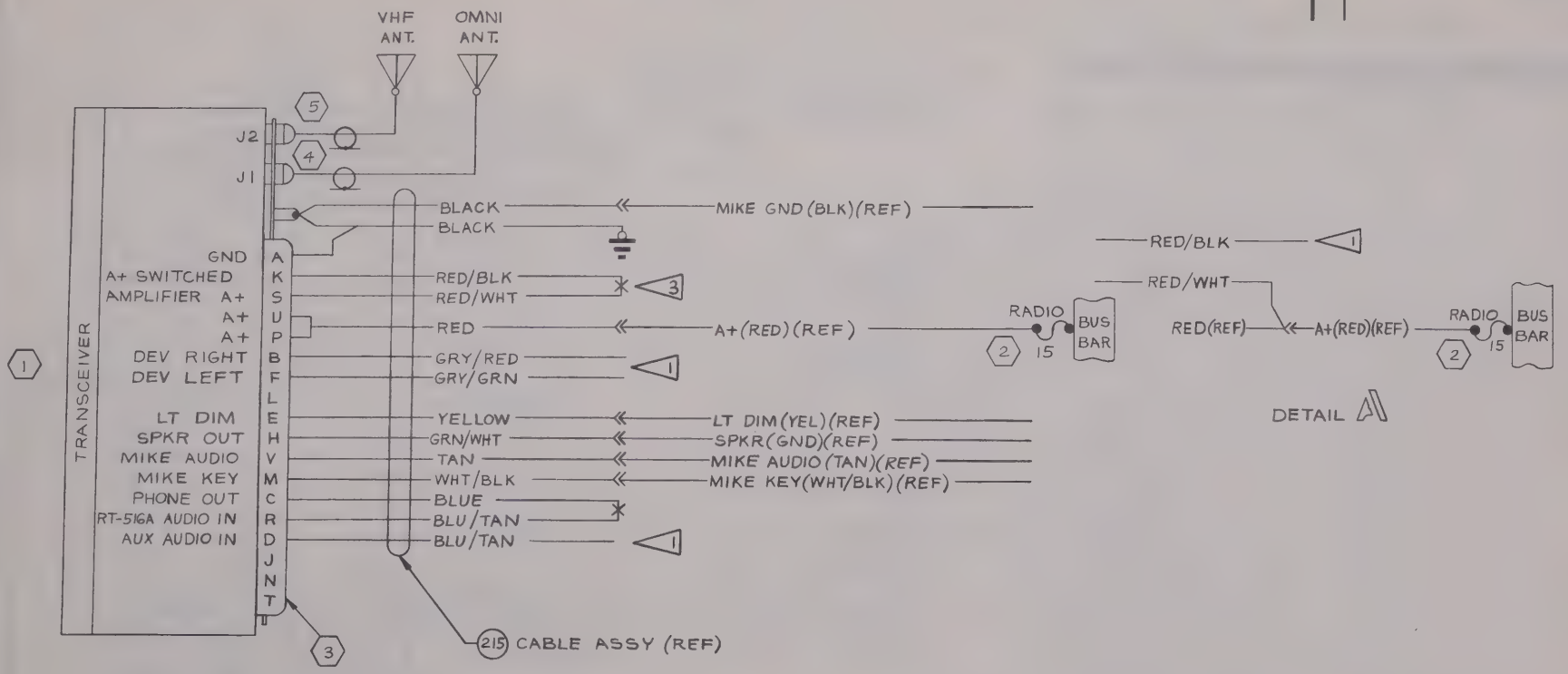


NOTES:

1. WIRES NOT USED SHALL BE CAPPED AND TIED INTO A BUNDLE
2. WIRE MATERIAL PER S-1460
3. WHEN THIS SET IS INSTALLED AS A SINGLE RADIO, CONNECT PINS "S" & "K" TOGETHER AS SHOWN. WHEN INSTALLED IN CONJUNCTION WITH ANOTHER RADIO SET SUCH AS AN ADF OR A NAV-OMNI, CONNECT PIN "S" AS SHOWN IN DETAIL "A"

| WIRE CODE NO. | GA | MATERIAL | LG | TERMINALS | | SERIALS |
|---|---|---|---|---|---|---|
| BLU/TAN | 22 | -22-6-10 | | SOLDER | S-1557-1 | |
| BLU/TAN | 22 | -22-6-10 | | | S-1370-1 | |
| BLUE | 22 | -22-6 | | | | |
| WHT/BLK | 22 | -22-9-0 | | | S-341-2 | |
| TAN | 22 | -22-10 | | | | |
| GRN/WHT | 20 | -20-5-9 | | | | |
| YELLOW | 18 | -18-4 | | | S-341-2 | |
| GRY/GRN | 22 | -22-8-5 | | | S-1557-1 | |
| GRY/RED | 22 | -22-8-2 | | | S-1557-1 | |
| RED | 16 | -16-2 | | | S-341-1 | |
| RED/BLK | 18 | -18-2-0 | | | S-1370-1 | |
| RED/WHT | 18 | -18-2-9 | | | | |
| BLACK | 16 | -16-0 | | | S-1367-1-10 | |
| BLACK | 22 | -22-0 | | SOLDER | S-341-2 | |

2 WIRE TABLE

| | | | |
|---|---|---|---|
| 5 | 29753 | CONNECTOR (ARC) | |

CESSNA AIRCRAFT CO., COMMERCIAL AIRCRAFT DIVISION, WICHITA, KANSAS

| NAME | DATE | SIZE |
|---|---|---|
| | | |

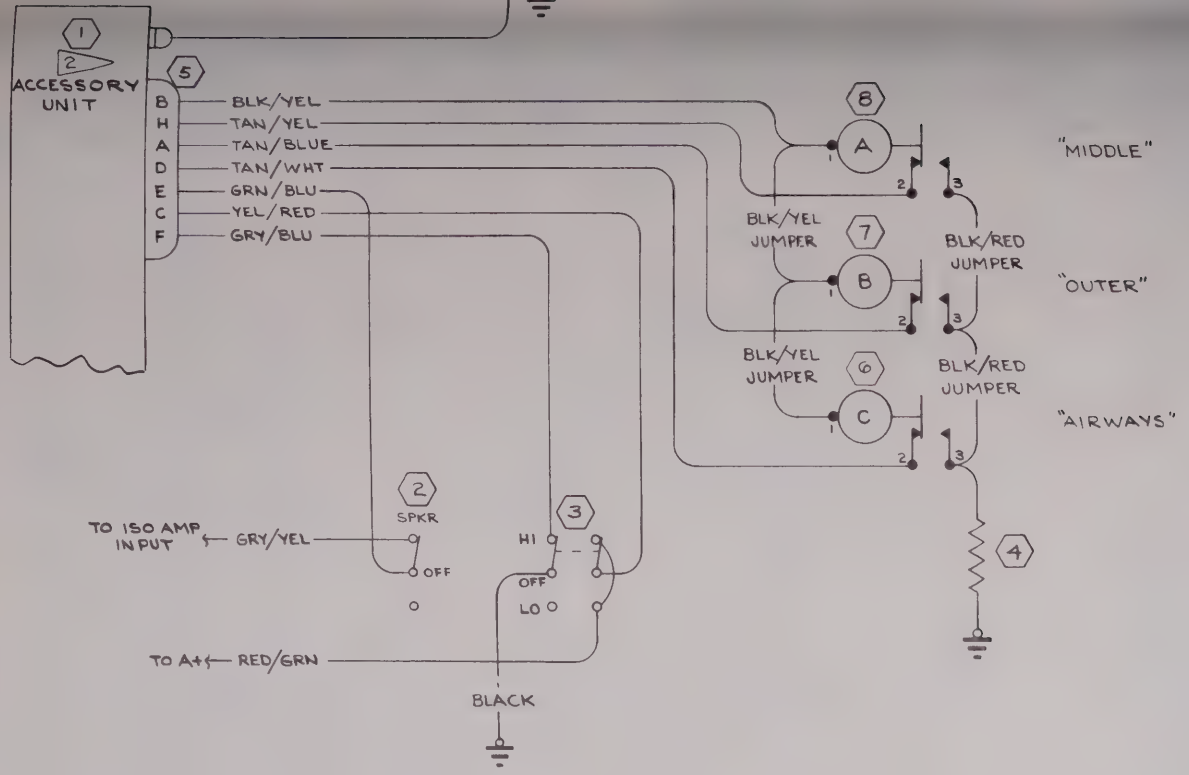


NOTES:

1. WIRE MATERIAL PER S-1460.
2. REFER TO PAGE 2.17.1 FOR WIRING OF ACCESSORY UNIT TO PANEL UNIT.

| ITEM NO | PART NO. | DESCRIPTION | INSTALLED ON |
|---|---|---|---|
| 8 | MS25041-4-328 | LIGHT ASSY | |
| 7 | MS25041-10-328 | LIGHT ASSY | |
| 6 | MS25041-1-328 | LIGHT ASSY | |
| 5 | 28371-0007 | CONNECTOR | CARC |
| 4 | 40Ω, 3 WATT | RESISTOR (OM) | |
| 3 | S-392-1 | SWITCH | |
| 2 | S-382-1 | SWITCH | |
| 1 | 32980-0014 | ACCESS. UNIT (ARC TYPE RA-525A-1) | |

EQUIPMENT TABLE

| WIRE CODE NO. | GA | MATERIAL | LG | TERMINALS | | | SERIALS |
|---|---|---|---|---|---|---|---|
| BLACK | 22 | -22-0 | | S-1367-1-6 | S-1367-1-8 | | |
| RED/GRN | 20 | -20-2-5 | | S-1367-1-6 | | | |
| GRY/YEL | 22 | -22-8-4 | | S-1367-1-6 | | | |
| GRY/BLU | 22 | -22-8-6 | | SOLDER | S-1367-1-6 | | |
| YEL/RED | 20 | -20-4-2 | | | S-1367-1-6 | | |
| GRN/BLU | 20 | -20-5-6 | | | S-1367-1-6 | | |
| TAN/WHT | 22 | -22-10-9 | | | SOLDER | | |
| TAN/BLU | 22 | -22-10-6 | | | | | |
| TAN/YEL | 22 | -22-10-4 | | | | | |
| BLK/YEL | 22 | -22-0-4 | | SOLDER | SOLDER | | |

1 WIRE TABLE

CESSNA AIRCRAFT CO. COMMERCIAL AIRCRAFT DIVISION WICHITA KANSAS

| | NAME | DATE |
|---|---|---|
| DRAWN | RIDDER | 4-13-65 |
| GROUP | H. Wire | 4-22-65 |
| CHECK | R. Stuck | 4-22-65 |
| PROJ | [illegible] | 4-26-65 |
| | STEINER | 4-23-65 |

TITLE: WIRING DIAGRAM— MARKER BEACON CESSNA NAV/OMNI 300 (ARC TYPE 525A)

Cessna.

DWG NO: 0470400

SUPERSEDED BY: | SUPERSEDES: | MODEL: 150 | REV: | PAGE: 2.14.1

FORM NO 80-161A

(SR 4662) X

| CHG LET | REVISION | BY DATE | CHK APPD |
|---|---|---|---|
| | | | |

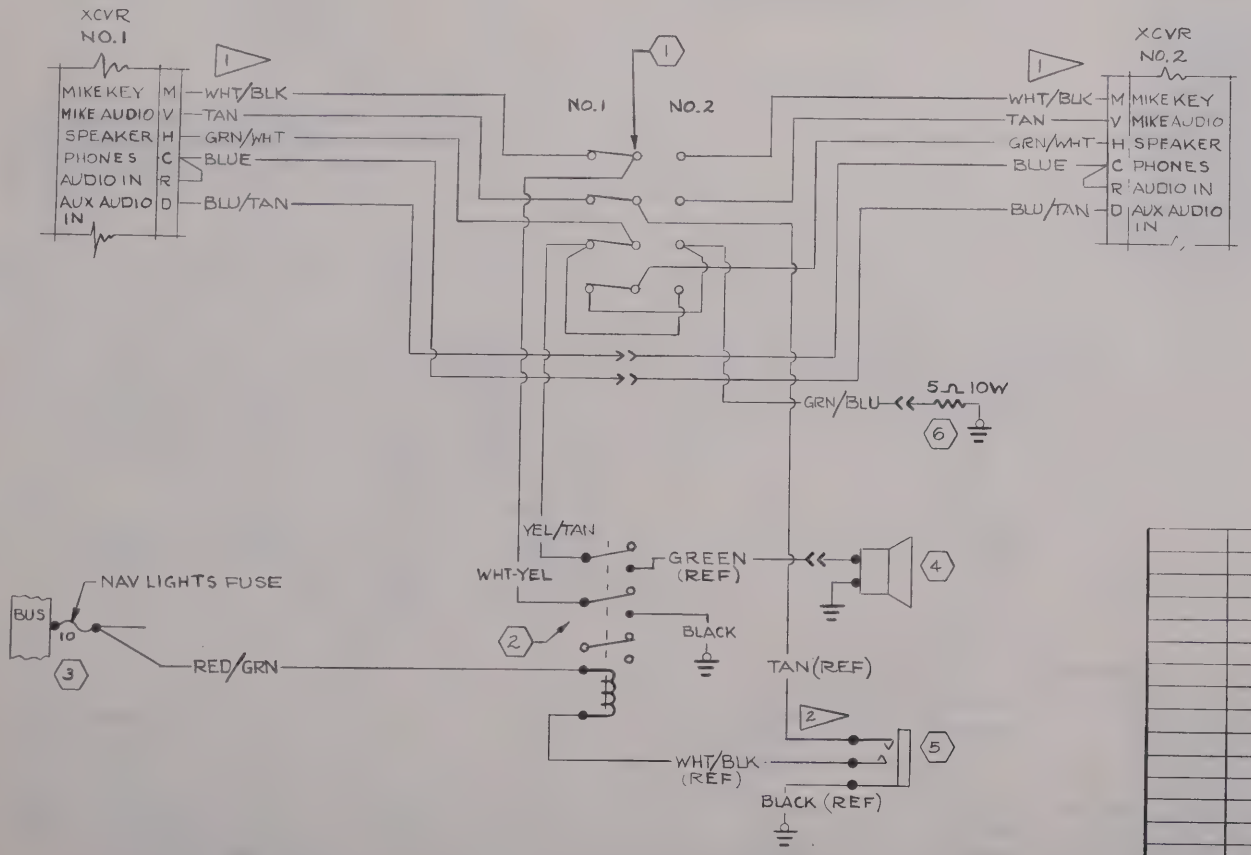


NOTES:

1. COLOR CODES SHOWN ARE APPLICABLE TO CESSNA 300 SERIES TRANSCEIVER AND ARE PART OF THE TRANSCEIVER CABLE ASSY. THESE WIRES ARE TO BE CONNECTED DIRECTLY TO THE SWITCH WHERE APPLICABLE.
2. WIRES FROM MIKE JACK ARE TO BE CONNECTED DIRECTLY TO THE RELAY AND SWITCH AS SHOWN WITHOUT USE OF SPLICES.

| | | | |
|---|---|---|---|
| 6 | 5Ω 10W | RESISTOR | (OM) |
| 5 | S-1102-1 | MIKE JACK | |

| WIRE CODE NO. | GA | MATERIAL | LG | TERMINALS | | SERIALS |
|---|---|---|---|---|---|---|
| RED/GRN | 22 | S-1460-22-2-5 | | SOLDER | SOLDER | |
| GRN/BLU | 22 | S-1460-22-5-6 | | S-341-2 | S-1367-1-6 | |
| BLACK | 22 | S-1460-22-0 | | SOLDER | S-1367-1-8 | |
| YEL/TAN | 22 | S-1460-22-4-10 | | SOLDER | S-1367-1-6 | |
| WHT/YEL | 22 | S-1460-22-9-4 | | SOLDER | S-1367-1-6 | |

WIRE TABLE

CESSNA AIRCRAFT CO., COMMERCIAL AIRCRAFT DIVISION, WICHITA, KANSAS

| NAME | DATE | TITLE |
|---|---|---|
| | | |

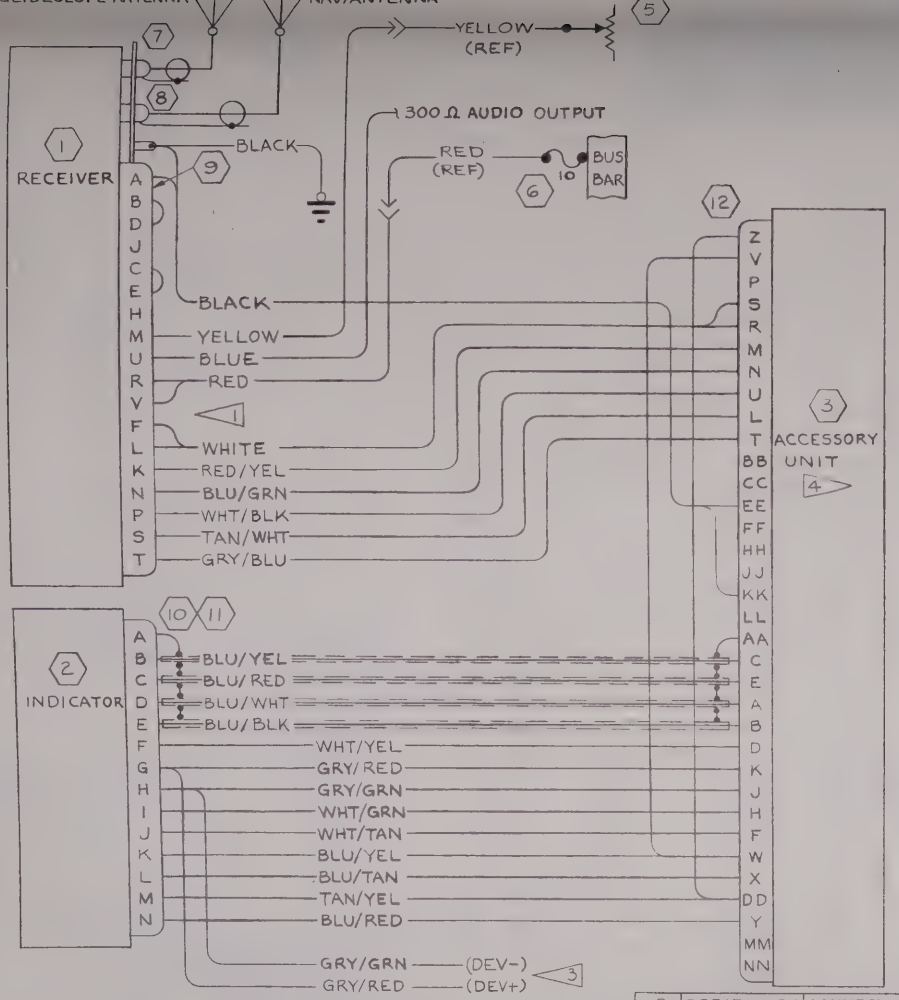


NOTES:

1. RED, WHITE & BLACK 16 GA WIRES TO BE HALVED & SOLDERED TO PINS AS SHOWN.
2. WIRE MATERIAL PER S-1460 EXCEPT FOR SHIELDED WIRE.
3. TERMINALS NOT REQD WHEN RADIO IS INSTALLED WITH AN AUTOPILOT.
4. REFER TO PAGE 2.14.1 FOR WIRING OF MKR BCN PORTION OF ACCESSORY UNIT.

| ITEM NO | PART NO. | DESCRIPTION | INSTALLED ON |
|---|---|---|---|
| 12 | 29747-0034 | CONNECTOR (ARC) | |
| 11 | MS3057-12A | CLAMP | |
| 10 | MS3106A-20-27S | PLUG | |
| 9 | 29747-0018 | CONNECTOR (ARC) | |
| 8 | 29752 | CONNECTOR (ARC) | |
| 7 | 29753 | CONNECTOR (ARC) | |
| 6 | S-1091-10 | FUSE | |
| 5 | 0413126-5 | RHEOSTAT | |
| 4 | | | |
| 3 | 32980-0014 | ACCESSORY UNIT (ARC RA-525A-1) | |
| 2 | 32350 | INDICATOR (ARC IN-525A) | |
| 1 | 31380-1000 | RCVR (ARC R-525A-10) | |

EQUIPMENT TABLE

| WIRE CODE NO | GA | MATERIAL | LG | TERMINALS | | | SERIALS |
|---|---|---|---|---|---|---|---|
| BLACK | 16 | S-1460-16-0 | | SOLDER | SOLDER | | |
| BLACK | 16 | S-1460-16-0 | | S-1367-2-8 | SOLDER | | |
| BLU/WHT | 22-5 | S-1461-22-6-9 | | SOLDER | SOLDER | | |
| BLU/YEL | 22-5 | S-1461-22-6-4 | | | | | |
| BLU/BLK | 22-5 | S-1461-22-6-0 | | | | | |
| BLU/RED | 22-5 | S-1461-22-6-2 | | | | | |
| WHT/BLK | 22 | -22-9-0 | | | | | |
| TAN/WHT | 22 | -22-10-9 | | | | | |
| TAN/YEL | 22 | -22-10-4 | | | | | |
| WHT/TAN | 22 | -22-9-10 | | | | | |
| WHT/GRN | 22 | -22-9-5 | | | | | |
| WHT/YEL | 22 | -22-9-4 | | | SOLDER | | |
| GRY/GRN | 22 | -22-8-5 | | SOLDER | S-1557-1 | | |
| GRY/GRN | 22 | -22-8-5 | | SOLDER | SOLDER | | |
| GRY/RED | 22 | -22-8-2 | | | S-1557-1 | | |
| GRY/RED | 22 | -22-8-2 | | | SOLDER | | |
| GRY/BLU | 22 | -22-8-6 | | | | | |
| BLU/TAN | 22 | -22-6-10 | | | | | |
| BLU/GRN | 22 | -22-6-5 | | | | | |
| BLU/YEL | 22 | -22-6-4 | | | | | |
| BLU/RED | 22 | -22-6-2 | | | | | |
| RED/YEL | 22 | -22-2-4 | | | | | |
| WHITE | 16 | -16-9 | | | SOLDER | | |
| BLUE | 22 | -22-6 | | | | | |
| YELLOW | 18 | -18-4 | | | S-341-2 | | |
| RED | 16 | -16-2 | | SOLDER | S-341-1 | | |

WIRE TABLE

CESSNA AIRCRAFT CO. COMMERCIAL AIRCRAFT DIVISION, WICHITA, KANSAS

| | NAME | DATE |
|---|---|---|
| DRAWN | RIDDER | 4-16-65 |
| GROUP | H Wise | 4-22-65 |
| CHECK | R Stuck | 4-22-65 |
| PROJ | J Sattler | 4-16-65 |
| | STEINER | 4-23-65 |

TITLE: WIRING DIAGRAM — CESSNA NAV/OMNI 300 (ARC TYPE 525A)

Cessna.

DWG NO. 0470400

SUPERSEDED BY | SUPERSEDES | MODEL 150 | REV | PAGE 2.17.1

FORM NO. 80-161

(SR4662)

| CHG LET | REVISION | BY / DATE | CHK / APPD |
|---|---|---|---|
| A | BY REV; TERMINAL IDENTIFICATION ON 28371-0009 PLUG WAS 'B', 'H', 'A', 'D', 'E', 'C', 'F', 'J'. | 8-4-65 | DRM RES |

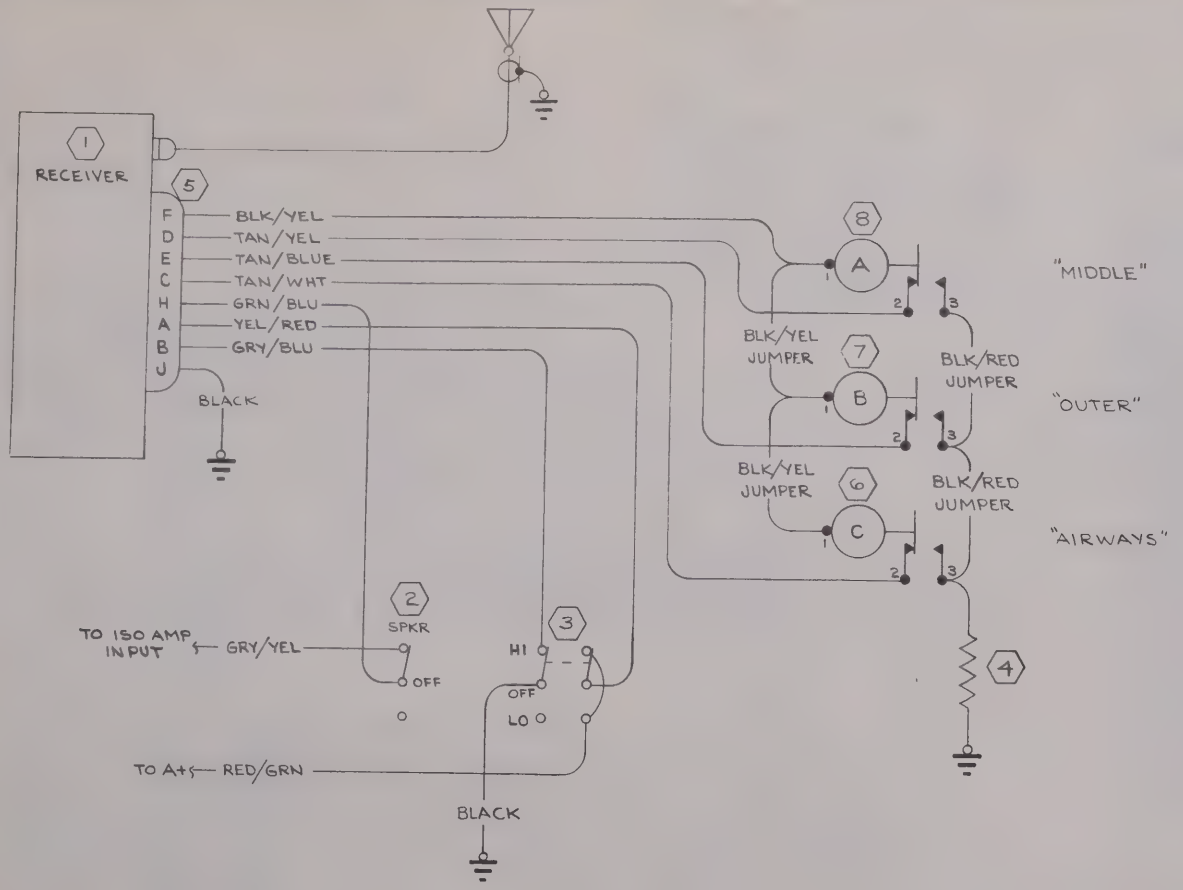


NOTES:

1. WIRE MATERIAL PER S-1460.

| WIRE CODE NO. | GA | MATERIAL | LG | TERMINALS | | | SERIALS |
|---|---|---|---|---|---|---|---|
| BLACK | 22 | -22-0 | | SOLDER | S-1367-1-8 | | |
| BLACK | 22 | -22-0 | | S-1367-1-6 | S-1367-1-8 | | |
| RED/GRN | 20 | -20-2-5 | | S-1367-1-6 | | | |
| GRY/YEL | 22 | -22-8-4 | | S-1367-1-6 | | | |
| GRY/BLU | 22 | -22-8-6 | | SOLDER | S-1367-1-6 | | |
| YEL/RED | 20 | -20-4-2 | | | S-1367-1-6 | | |
| GRN/BLU | 20 | -20-5-6 | | | S-1367-1-6 | | |
| TAN/WHT | 22 | -22-10-9 | | | SOLDER | | |
| TAN/BLU | 22 | -22-10-6 | | | | | |
| TAN/YEL | 22 | -22-10-4 | | | | | |
| BLK/YEL | 22 | -22-0-4 | | SOLDER | SOLDER | | |

1 WIRE TABLE

| | | | |
|---|---|---|---|
| 8 | MS25041-4-328 | LIGHT ASSY | |
| 7 | MS25041-10-328 | LIGHT ASSY | |
| 6 | MS25041-1-328 | LIGHT ASSY | |
| 5 | 28371-0009 | PLUG (ARC) | |
| 4 | 40Ω, 3 WATT | RESISTOR (OM) | |

CESSNA AIRCRAFT CO., COMMERCIAL AIRCRAFT DIVISION, WICHITA, KANSAS

| NAME | DATE | TITLE |
|---|---|---|

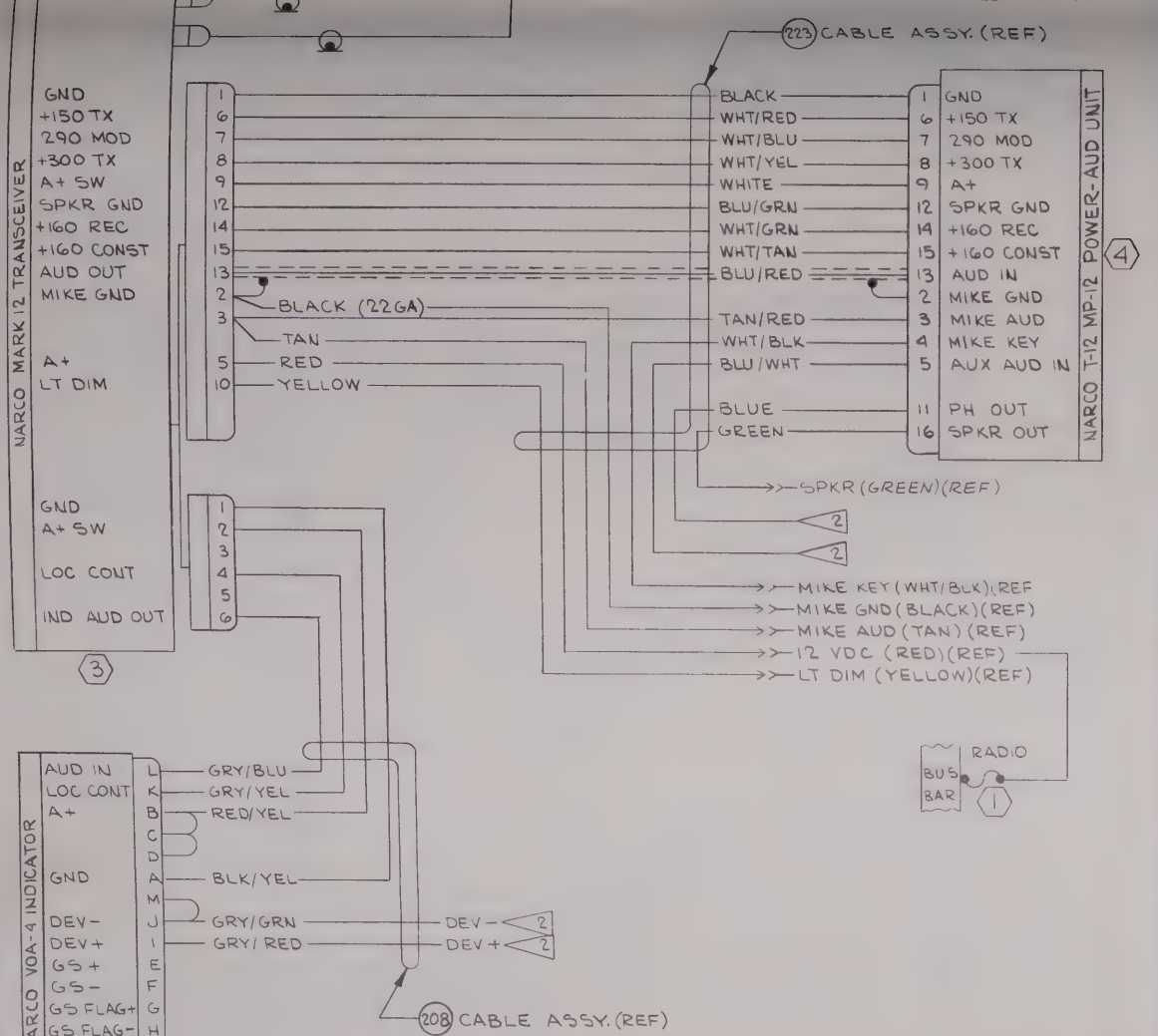


| WIRE CODE NO. | GA | MATERIAL | LG | TERMINALS | | | SERIALS |
|---|---|---|---|---|---|---|---|
| GRY/BLU | 22 | -22-8-6 | 15 | SOLDER | SOLDER | | |
| GRY/YEL | 22 | -22-8-4 | 15 | | | | |
| RED/YEL | 22 | 22-2-4 | 15 | | | | |
| BLK/YEL | 22 | -22-0-4 | 15 | | SOLDER | | |
| GRY/GRN | 22 | -22-8-5 | .5 | | S-1557-1 | | |
| GRY/RED | 22 | 22-8-2 | .5 | | S 1557-1 | | |
| BLACK | 16 | -16-0 | | | SOLDER | | |
| WHT/RED | 22 | 22-9-2 | | | | | |
| WHT/BLU | 22 | -22-9-6 | | | | | |
| WHT/YEL | 22 | 22-9-4 | | | | | |
| WHITE | 14 | | | | | | |
| BLU/GRN | 22 | -22-6-5 | | | | | |
| WHT/GRN | 22 | -22-9-5 | | | | | |
| WHT/TAN | 22 | -22-9 10 | | | | | |
| BLU/RED | 22 | S-1461-22-6-2 | | | | | |
| TAN/RED | 22 | -22-10-2 | | | SOLDER | | |
| WHT/BLK | 22 | -22-9-0 | | | S-341-2 | | |
| BLU/WHT | 22 | -22-6-9 | | | S 1557-1 | | |
| BLUE | 22 | -22-6 | | | S-1557-1 | | |
| GREEN | 20 | -20-5 | | | S-341-2 | | |
| BLACK | 22 | -22-0 | | | S 341-2 | | |
| TAN | 22 | -22-10 | | | S-341-2 | | |
| RED | 16 | -16-2 | | | S-341-1 | | |
| YELLOW | 18 | 18-4 | | SOLDER | S-341 2 | | |

1 WIRE TABLE

| ITEM NO | PART NO. | DESCRIPTION | INSTALLED ON |
|---|---|---|---|
| 4 | T-12 MP-12 | PWR. SUPPLY (NARO) | |
| 3 | MARK 12 | XCVR (NARO) | |
| 2 | VOA-4 | INDICATOR (NARO) | |
| 1 | S-1091-10 | FUSE | |

EQUIPMENT TABLE

CESSNA AIRCRAFT CO., COMMERCIAL AIRCRAFT DIVISION, WICHITA, KANSAS

| | NAME | DATE |
|---|---|---|
| DRAWN | BLISS | 4 28-65 |
| GROUP | H. Wise | 5-4-65 |
| CHECK | [illegible] | 5 5 65 |
| PROJ | [illegible] | 5-5-65 |
| | [illegible] | 5-6-65 |

TITLE: WIRING DIAGRAM— NARCO MARK 12

Cessna®

DWG NO: 0470400

SUPERSEDED BY:

SUPERSEDES: 0470 400 PG. 2.7.2

MODEL: 150

REV:

PAGE: 2.21.1

FORM NO 80 161A

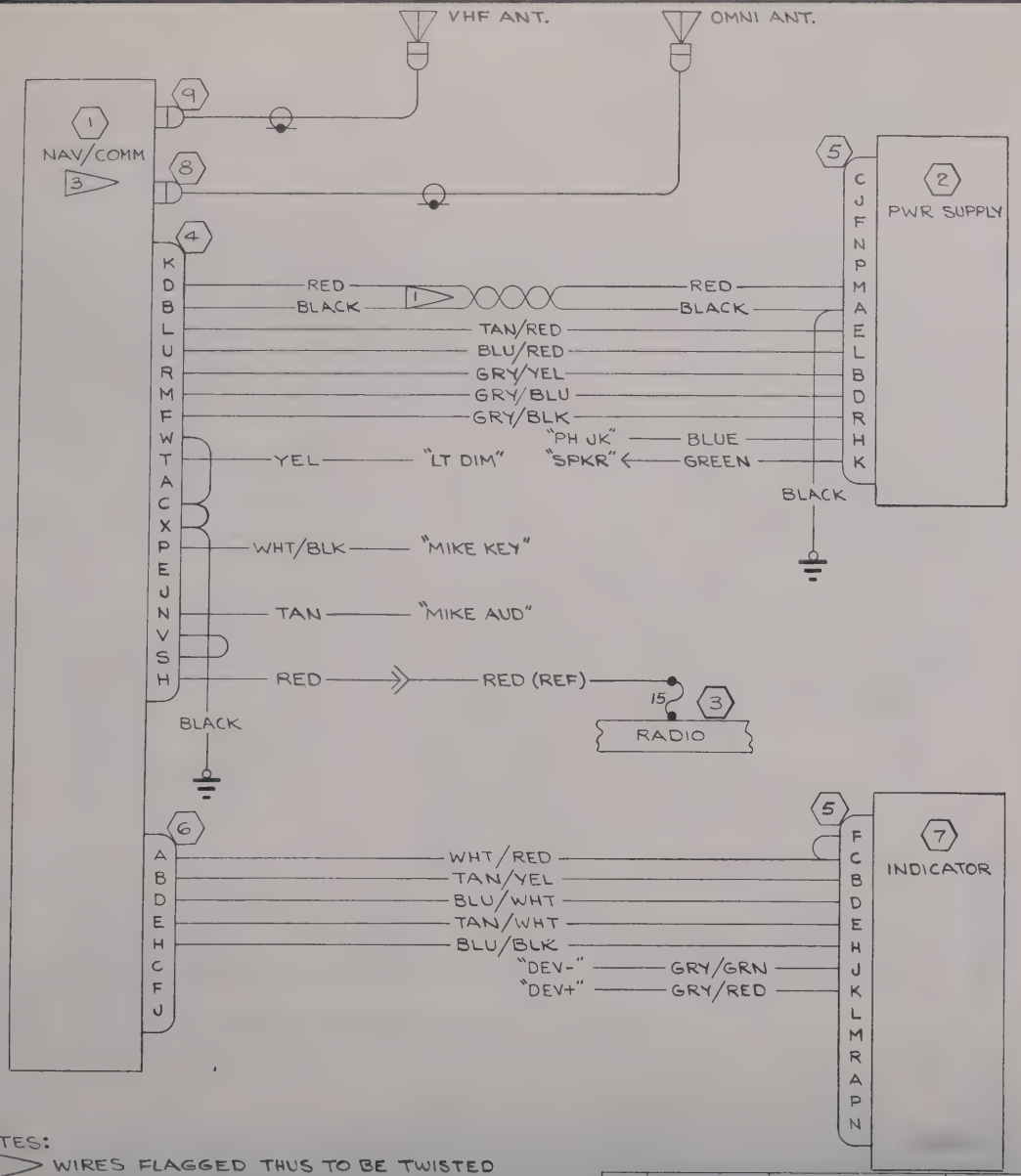


| CHG LET | REVISION | BY DATE | CHK APPD |
|---|---|---|---|
| | | | |

NOTES:

1. WIRES FLAGGED THUS TO BE TWISTED TOGETHER TO FORM A TWISTED PAIR.
2. WIRE MATERIAL PER S-1460.
3. THE KX-160E PANEL UNIT INCLUDES A 14 PIN CONNECTOR FOR DME CHANNELING THAT IS NOT SHOWN ON THIS DIAGRAM.

| | | | |
|---|---|---|---|
| 9 | 030-0005-00 | CONNECTOR (KG) | |
| 8 | 030-0028-00 | CONNECTOR (KG) | |
| 7 | KI-201 | INDICATOR (KG) | |
| 6 | 030-2044-00 | CONNECTOR (KG) | |
| 5 | 030-2000-00 | CONNECTOR (KG) | |

| WIRE CODE NO. | GA | MATERIAL | LG | TERMINALS | | SERIALS |
|---|---|---|---|---|---|---|
| GRY/RED | 22 | -22-8-2 | | SOLDER | S-1557-1 | |
| GRY/GRN | 22 | -22-8-5 | | | S-1557-1 | |
| BLU/BLK | 22 | -22-6-0 | | | SOLDER | |
| TAN/WHT | 22 | -22-10-9 | | | | |
| BLU/WHT | 22 | -22-6-9 | | | | |
| TAN/YEL | 22 | -22-10-4 | | | | |
| WHT/RED | 22 | -22-9-2 | | | SOLDER | |
| BLACK | 22 | -22-0 | | | S-1367-18 | |
| RED | 16 | -16-2 | | | S-341-1 | |
| TAN | 22 | -22-10 | | | | |
| WHT/BLK | 22 | -22-9-0 | | | | |
| YELLOW | 18 | -18-4 | | | | |
| BLACK | 22 | -22-0 | | | S-1367-18 | |
| GREEN | 20 | -20-5 | | | S-341-2 | |
| BLUE | 22 | -22-6 | | | S-1557-1 | |
| GRY/BLK | 22 | -22-8-0 | | | SOLDER | |
| GRY/BLU | 22 | -22-8-6 | | | | |
| GRY/YEL | 22 | -22-8-4 | | | | |
| BLU/RED | 22 | -22-6-2 | | | | |
| TAN/RED | 22 | -22-10-2 | | | | |
| BLACK | 16 | -16-0 | | | | |
| RED | 16 | -16-2 | | SOLDER | SOLDER | |

2 WIRE TABLE

CESSNA AIRCRAFT CO., COMMERCIAL AIRCRAFT DIVISION, WICHITA, KANSAS

| | NAME | DATE | TITLE |
|---|---|---|---|
| DRAWN | | | |
| CHECKED | | | |
| ENGR APPR | | | |
| MFG APPR | | | |

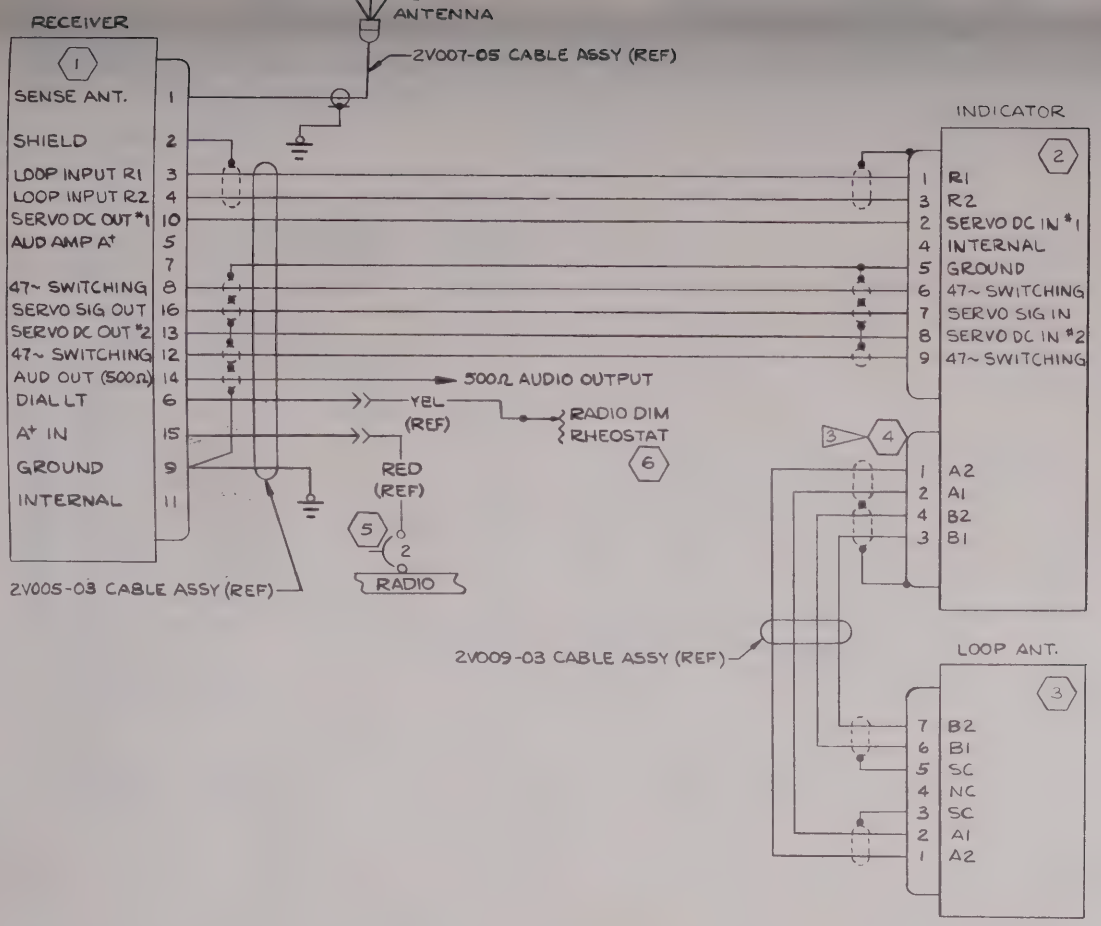


NOTES:

1. CONNECTIONS SHOWN ARE FOR TOP MOUNTED SENSE & BOTTOM MOUNTED LOOP ANTENNA.
2. ALL WIRES ARE VENDOR FURNISHED WITH INSTL KIT

3. 4 IS SUPPLIED LOOSE BY VENDOR & IS TO BE ATTACHED TO LOOP ANT. CABLE AS SHOWN. FLAGS ON WIRES INDICATE PIN NOS. ON LOOP ANT. END OF CABLE.

| TEM NO | PART NO | DESCRIPTION | INSTALLED ON |
|---|---|---|---|
| 6 | 0413126-5 | RHEOSTAT | |
| 5 | S-1360-2 | CIRCUIT BREAKER | |
| 4 | WK-4-21C-5/16 | PLUG (CED) | |
| 3 | 2321E | LOOP ANT (BX) | |
| 2 | 551A | INDICATOR (BX) | |
| 1 | 201D | RCVR (BX) | |

EQUIPMENT TABLE

| WIRE CODE NO | GA | MATERIAL | LG | TERMINALS | | SERIALS |
|---|---|---|---|---|---|---|

WIRE TABLE

CESSNA AIRCRAFT CO., COMMERCIAL AIRCRAFT DIVISION, WICHITA, KANSAS

| | NAME | DATE |
|---|---|---|
| DRAWN | HOLFORD | 7-20-65 |
| GROUP | H. Wise | 8-24-65 |
| CHECK | C. Stuck | 8-24-65 |
| PROJ | [illegible] | 8-27-65 |

TITLE: WIRING DIAGRAM— BENDIX ADF-T-12C

Cessna

DWG NO 0470400

SUPERSEDED BY | SUPERSEDES | MODEL: 150 | REV | PAGE: 2.23

FORM NO 80 161A

NOTES

1. WHERE WIRE CODE LISTS 2 COLORS FIRST COLOR IS BASE COLOR & SECOND COLOR IS THE STRIPE
2. THIS DRAWING IS SCHEMATICALLY IDENTICAL TO THE EQUIV PORTION OF 1270405. PAGE 17.7.1 & 15 FOR REF ONLY. CABLE ASSYS TO BE FABRICATED PER 1270405

| CHG LET | REVISION | BY / DATE | CHK / APPD |
|---|---|---|---|
| A | 5 AMP FUSE WAS 2 AMP | [illegible] 1-16-64 | [illegible] |

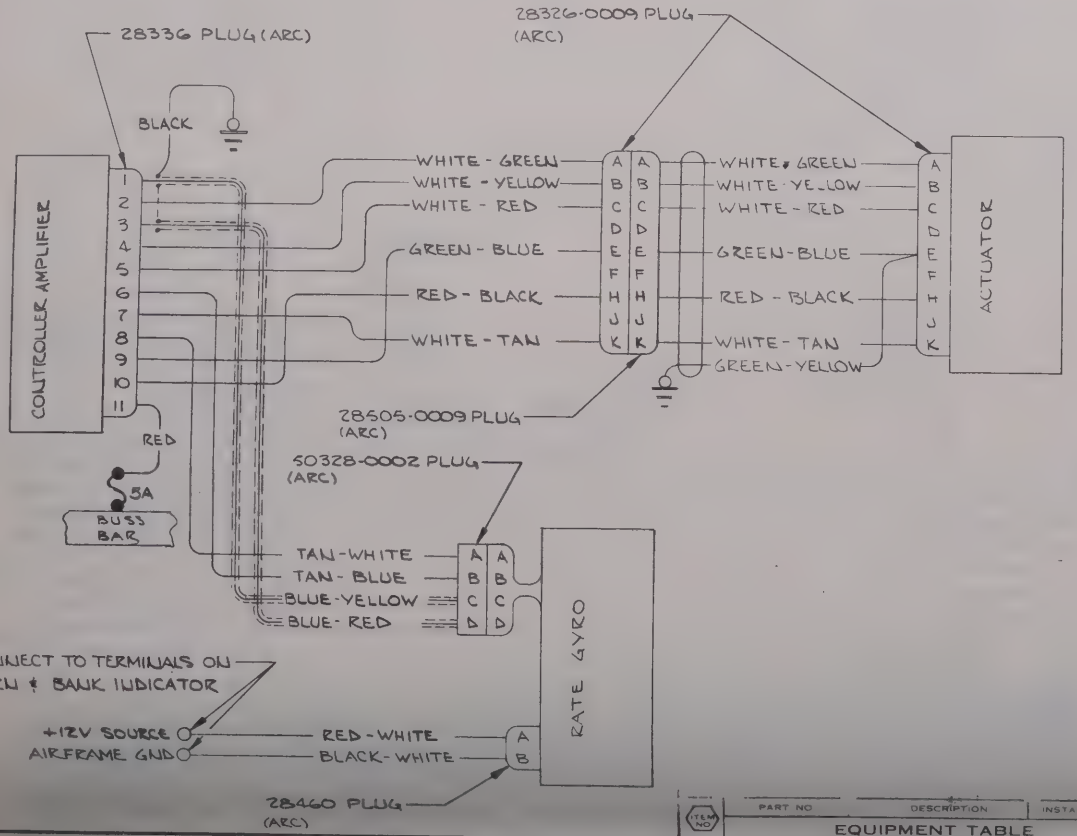


| WIRE CODE NO | GA | MATERIAL | LG | TERMINALS | SERIALS |
|---|---|---|---|---|---|
| | | | | | |

WIRE TABLE

| ITEM NO | PART NO | DESCRIPTION | INSTALLED U.S. |
|---|---|---|---|

EQUIPMENT TABLE

CESSNA AIRCRAFT CO. COMMERCIAL AIRCRAFT DIVISION, WICHITA, KANSAS

| | NAME | DATE |
|---|---|---|
| DRAWN | DSOMES | 9-3-63 |
| GROUP | PARSONS | 9-5-63 |
| CHECK | [illegible] | 9-4-63 |
| PROJ | [illegible] | 9-6-63 |
| ENGR | [illegible] | 9-5-63 |

TITLE: WIRING DIAGRAM — NAV-O-MATIC 200 (OPTIONAL)

Cessna.

DWG NO 0410011

SUPERSEDED BY

SUPERSEDES

MODEL 150

REV A

PAGE 17.1

# TABLE OF CONTENTS

| NO. | TITLE | DATE ISSUED | REV |
|---|---|---|---|
| | **1963 SERIALS**<br>**17249545 thru 17250572**<br>**P17257120 thru P17257188** | | |
| | Cessna ADF 300 (Type 521A) | 12-4-63 | F |
| | Audio Isolation Amplifier | 9-26-62 | D |
| | Nav-O-Matic 200 & 300 | 9-26-62 | D |
| | Spkr, Ph Jack, Mike Jack, & Light Rheostat | 11-30-62 | E |
| | King KX-150 Director | 9-25-62 | |
| | Cessna VHF Nav/Com 300 Radio System (ARC Type 513A) | 12-4-62 | A |
| 1 | Cessna VHF Nav/Com 300 Radio System (ARC Type 513A) | 12-4-62 | A |

| CHG LET | REVISION | BY / DATE | CHK / APPD |
|---|---|---|---|
| D | ADDED NOTE 1 & 2 | [illegible] 10-1-62 | [illegible] |
| E | ADDED JUMPERS BETWEEN PINS 16 & 19 AND BETWEEN PINS 17 & 18 ON TUNER 0770065 (NOTE 2) WAS 0570309. | [illegible] 1-17-63 | [illegible] |
| F | TITLE WAS CESSNA ADF - MODEL ARC 521A (OPT) | RGB 12-4-63 | RES |

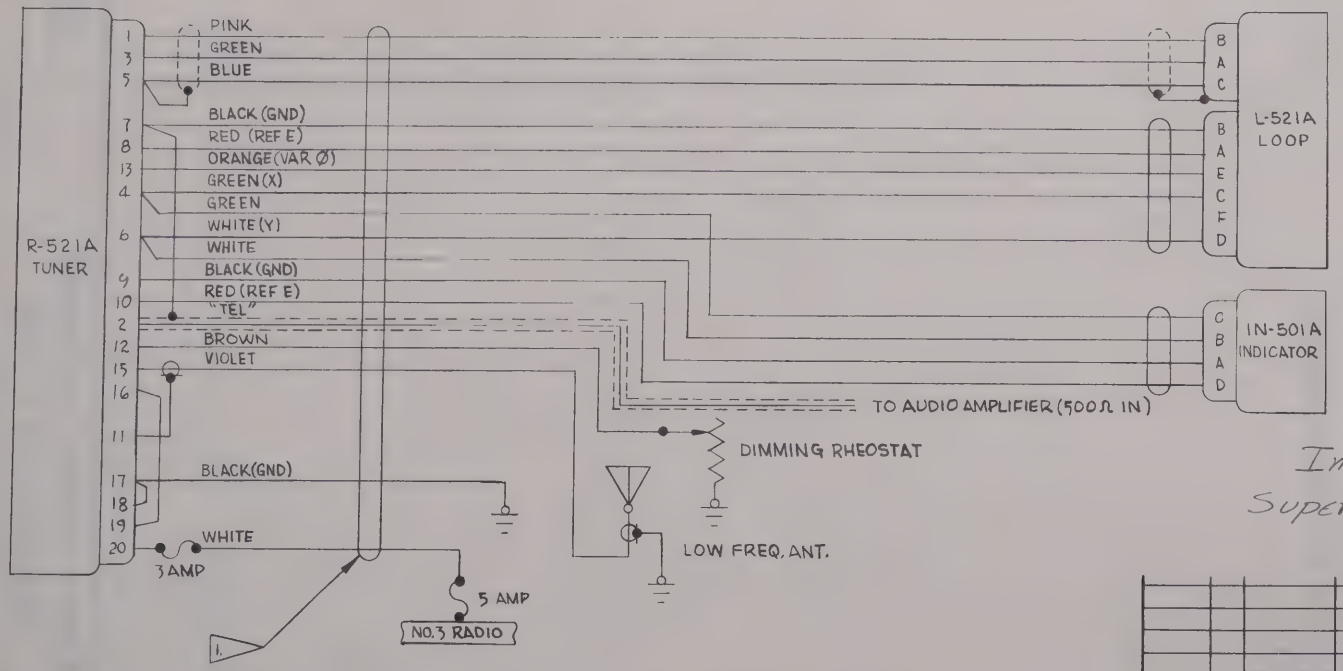


Inactive SER 17250573 & ON
Superseded by 0570400

G.A 5-8-63
RE [illegible]

NOTES:

1. THIS CABLE ASSEMBLY IS VENDOR FURNISHED AS PART OF R-521A TUNER.
2. REFER TO 0770065 FOR INSTALLATION.

| WIRE CODE NO. | GA | MATERIAL | LG | TERMINALS | | SERIALS |
|---|---|---|---|---|---|---|

WIRE TABLE

CESSNA AIRCRAFT CO. COMMERCIAL AIRCRAFT DIVISION, WICHITA, KANSAS

| | NAME | DATE |
|---|---|---|
| DRAWN | W COOK | 10-1-62 |
| GROUP | | |
| CHECK | R. Stuck | 10-1-62 |
| PROJ | [illegible] | 2-4-63 |

TITLE
WIRING DIAGRAM — CESSNA ADF 300 (ARC TYPE 521A) (OPT)

Cessna.

DWG NO. 0500062

| ITEM NO. | PART NO. | DESCRIPTION | INSTALLED ON |
|---|---|---|---|

SUPERSEDED BY | SUPERSEDES | MODEL | REV | PAGE

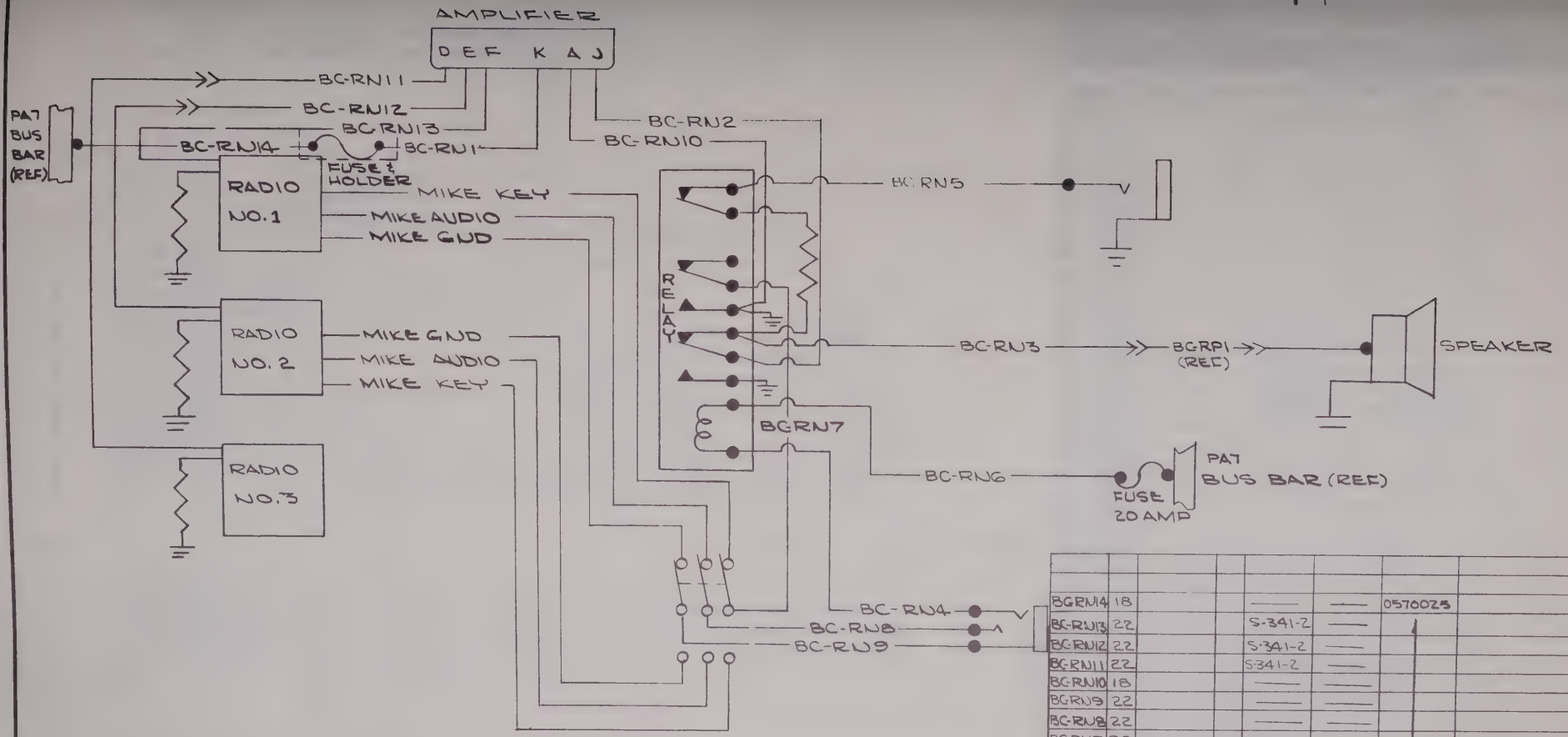


NOTES:
1. RN1 THRU RN14 ARE IDENTICAL TO & SUPERSEDE 0570025-RN1 THRU-RN14 RESPECTIVELY

| WIRE CODE NO. | GA | MATERIAL | LG | TERMINALS | | | SERIALS |
|---|---|---|---|---|---|---|---|
| BG-RN14 | 18 | | | — | — | 0570025 | |
| BG-RN13 | 22 | | | S-341-2 | — | | |
| BG-RN12 | 22 | | | S-341-2 | — | | |
| BG-RN11 | 22 | | | S-341-2 | — | | |
| BG-RN10 | 18 | | | — | — | | |
| BG-RN9 | 22 | | | — | — | | |
| BG-RN8 | 22 | | | — | — | | |
| BG-RN7 | 22 | | | — | — | | |
| BG-RN6 | 22 | | | — | — | | |
| BG-RN5 | 22 | | | — | — | | |
| BG-RN4 | 22 | | | — | — | | |
| BG-RN3 | 22 | | | S-341-2 | — | | |
| BG-RN2 | 22 | | | — | — | | |
| BG-RN1 | 18 | | | — | — | 0570025 | |

WIRE TABLE

| ITEM NO | PART NO. | DESCRIPTION | INSTALLED ON |
|---|---|---|---|

EQUIPMENT TABLE

CESSNA AIRCRAFT CO COMMERCIAL AIRCRAFT DIVISION WICHITA KANSAS

| | NAME | DATE |
|---|---|---|
| DRAWN | GRISWOLD | 9/1/59 |
| GROUP | DITTMER | 11/3/59 |
| CHECK | [illegible] | 9/9/59 |
| PROJ | SATTLER | 11/3/59 |

TITLE: WIRING DIAGRAM — AUDIO ISOLATION AMPLIFIER (OPT)

Cessna.

DWG NO. 0500062

SUPERSEDED BY | SUPERSEDES: NOTE 1 | MODEL: 172-D172 | REV: D | PAGE: 17-2

FORM NO. 80-161

| CHG LET | REVISION | BY / DATE | CHK / APPD |
|---|---|---|---|
| D | ADDED BC-CA1 THRU BC-CA29 & NOTES 1,2,3,4 (SR 3966) | JS 9-12-62 | RES |

NOTES:

1. SEE 1270405 PAGE 17.7 FOR WIRE REQUIREMENTS FOR 1270449-2 CABLE ASSY
2. "DEV +" & "DEV -" TO BE STAMPED ON THESE WIRES AS SHOWN. NUMERICAL CODE IS OPT.
3. BC-CA1 THRU BC-CA12 ARE IDENTICAL TO & SUPERSEDE 0511476-BC-CA1 THRU BC-CA12 RESPECTIVELY
4. BC CA13 THRU BC-CA15 ARE IDENTICAL TO & SUPERSEDE 0511077-BC-CA13, BC-CA14, BC-CA23 RESPECTIVELY.

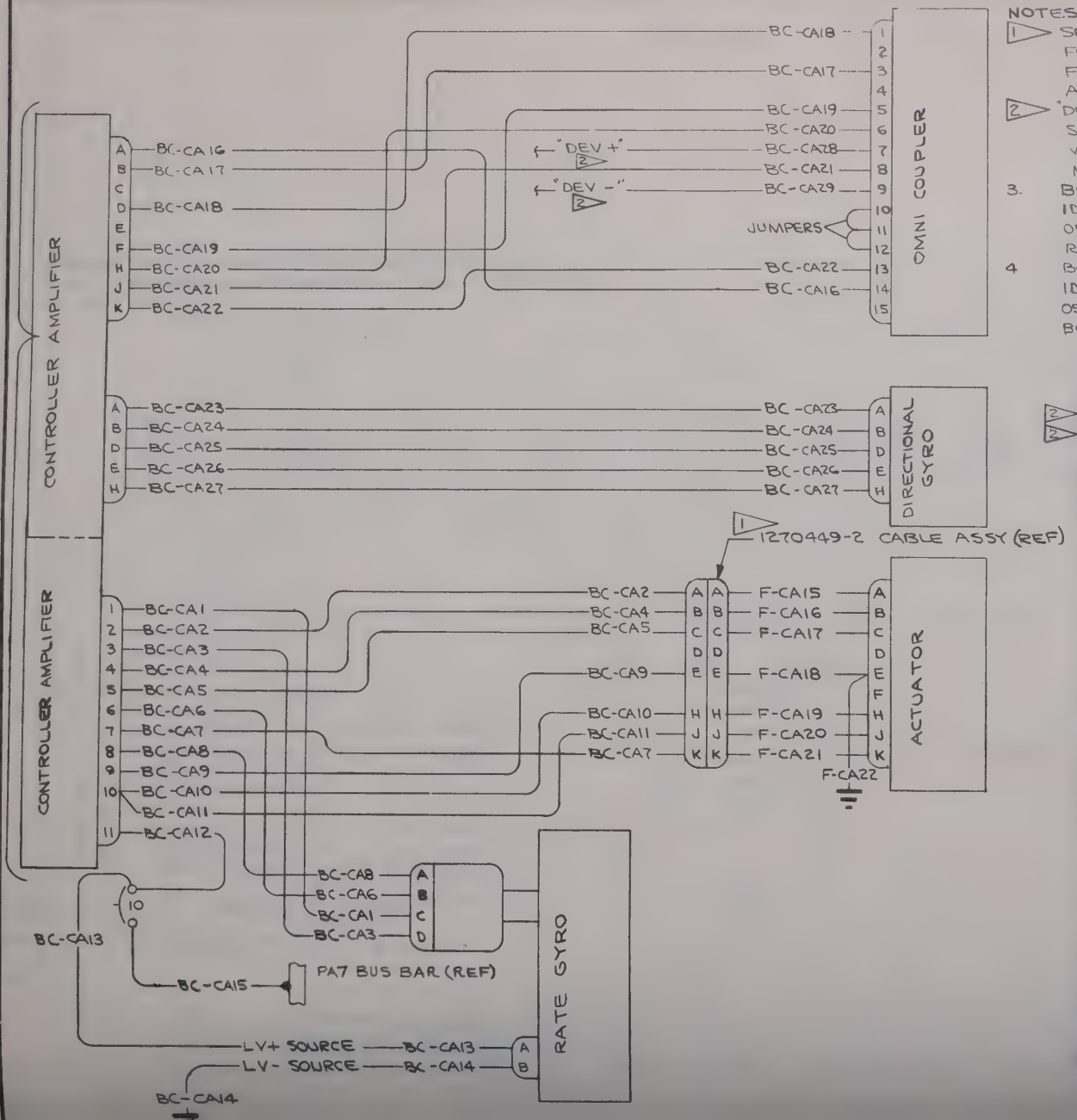


| WIRE CODE NO. | GA | MATERIAL | LG | TERMINALS | | N/A | SERIALS |
|---|---|---|---|---|---|---|---|
| BC-CA29 | 22 | | | SOLDER | SOLDER | 0570027 | |
| BC-CA28 | 22 | | | | | | |
| BC-CA27 | 22 | | | | | | |
| BC-CA26 | 22 | | | | | | |
| BC-CA25 | 22 | | | | | | |
| BC-CA24 | 22 | | | | | | |
| BC-CA23 | 22 | | | | | | |
| BC-CA22 | 20 | | | | | | |
| BC-CA21 | 22 | | | | | | |
| BC-CA20 | 22 | | | | | | |
| BC-CA19 | 22 | | | | | | |
| BC-CA18 | 22 | | | | | | |
| BC-CA17 | 20 | | | | | | |
| BC-CA16 | 20 | | | SOLDER | | 0570027 | |
| BC-CA15 | 16 | | | S-1367-2-6 | | 0511077 | |
| BC-CA14 | 18 | | | S-1367-1-8 | | 0570027 | |
| BC-CA13 | 18 | | | S-1367-1-8 | | | |
| BC-CA12 | 16 | | | SOLDER | | | |
| BC-CA11 | 20 | | | | | | |
| BC-CA10 | 20 | | | | | | |
| BC-CA9 | 22 | | | | | | |
| BC-CA8 | 22 | | | | | | |
| BC-CA7 | 22 | | | | | | |
| BC-CA6 | 22 | | | | | | |
| BC-CA5 | 22 | | | | | | |
| BC-CA4 | 22 | | | | | | |
| BC-CA3 | 22 | | | | | | |
| BC-CA2 | 22 | | | | | | |
| BC-CA1 | 22 | | | SOLDER | SOLDER | 0570027 | |

WIRE TABLE

CESSNA AIRCRAFT CO., COMMERCIAL AIRCRAFT DIVISION, WICHITA, KANSAS

| | NAME | DATE |
|---|---|---|
| DRAWN | SOLTESZ | 9/12/62 |
| GROUP | PARSONS | 10-1-62 |

TITLE: WIRING DIAGRAM — NAV-O-MATIC 200 & 300

Cessna.

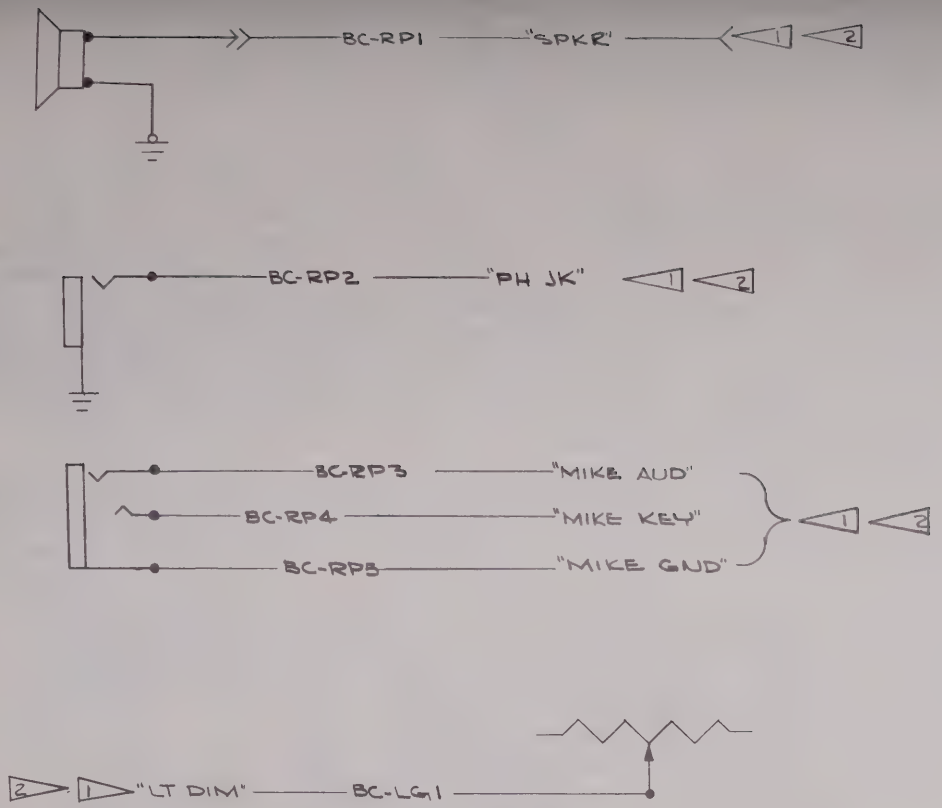


NOTES:

1. WIRES TO BE OF SUFFICIENT LENGTH TO ALLOW CONNECTION TO ALL POSSIBLE RADIO COMBINATIONS. TERMINALS TO BE ATTACHED TO WIRES AS REQ'D BY THE VARIOUS RADIO INSTALLATIONS
2. WIRES RP1, RP2, RP3, RP4, RP5 & LG1 TO BE CODED "SPKR", "PH JK", "MIKE AUD" "MIKE KEY", "MIKE GND", & "LT DIM" RESPECTIVELY. NUMERICAL CODING PER CES 1100 IS OPT ON THESE WIRES.

| WIRE CODE NO. | GA | MATERIAL | LG | TERMINALS | | | SERIALS |
|---|---|---|---|---|---|---|---|
| BC-RD100 | 16 | | | — | S-1367-2-8 | | OPT |
| 2 BC-LG1 | 20 | | | 1 | — | | OPT |
| 2 BC-RP5 | 20 | | | 1 | — | | OPT |
| BC-RP4 | 20 | | | 1 | — | | OPT |
| BC-RP3 | 20 | | | 1 | — | | OPT |
| BC-RP2 | 20 | | | 1 | — | | OPT |
| 2 BC-RP1 | 20 | | | S-341-2 | S-341-2 | | STD |

WIRE TABLE

| ITEM NO | PART NO. | DESCRIPTION | INSTALLED ON |
|---|---|---|---|

EQUIPMENT TABLE

CESSNA AIRCRAFT CO. COMMERCIAL AIRCRAFT DIVISION WICHITA KANSAS

| | NAME | DATE |
|---|---|---|
| DRAWN | GRISWOLD | 4/2/59 |
| GROUP | DITTMER | 4/3/59 |
| CHECK | COOK | 4/8/59 |
| PROJ | SATTLER | 4/3/59 |

TITLE: WIRING DIAGRAM — SPEAKER, PHONE JACK, MIKE JACK, & LIGHT RHEOSTAT

Cessna.

DWG NO: 0500062

SUPERSEDED BY

SUPERSEDES 0500062 "D" REV

MODEL: 172-P172

REV: E

PAGE: 17.4

FORM NO. 80-161

| CHG LET | REVISION | BY DATE | CHK APPD |
|---|---|---|---|
| | | | |

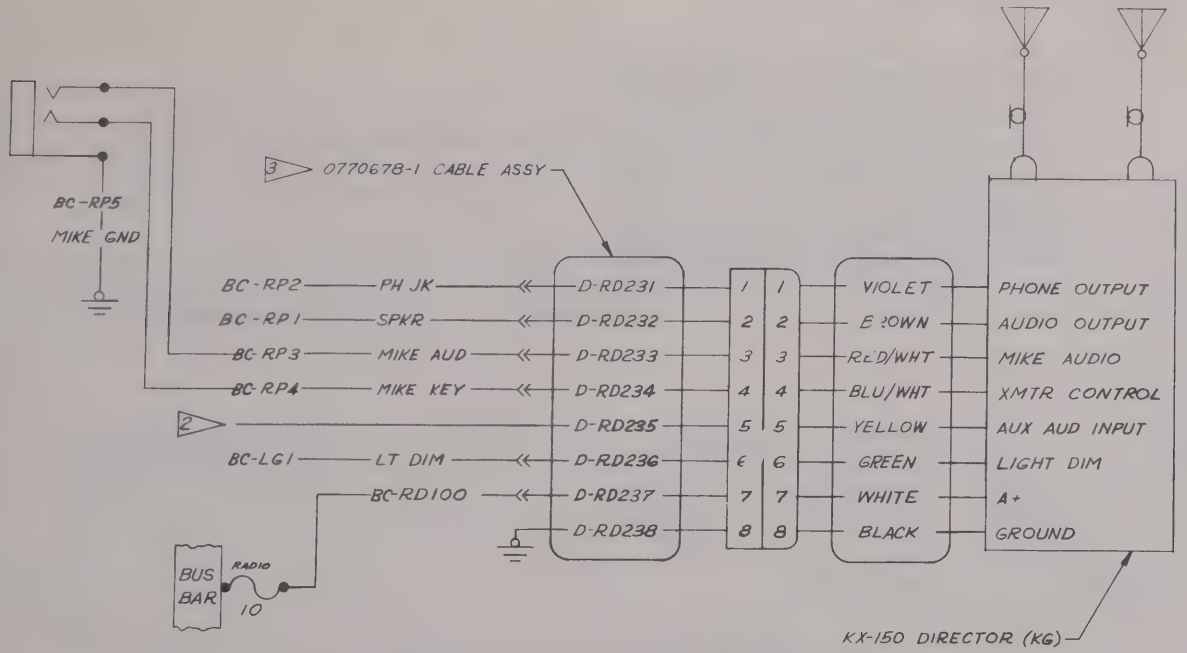


NOTES:

1. WIRING SHOWN IS FOR SINGLE INSTALLATION. SEE PAGE 17.2 FOR MULTIPLE INSTALLATION.
2. END OF WIRE SHALL BE SLEEVED AND TIED INTO CABLE UNTIL USED.
3. CABLE ASSEMBLY & SCHEMATIC SAME AS MODEL 182. FOR WIRE SIZES & CODING INSTRUCTIONS SEE 0770610 PAGE 17.8.

| WIRE CODE NO. | GA | MATERIAL | LG | TERMINALS | | SERIALS |
|---|---|---|---|---|---|---|
| | | | | | | |

WIRE TABLE

CESSNA AIRCRAFT CO. COMMERCIAL AIRCRAFT DIVISION WICHITA KANSAS

| | NAME | DATE |
|---|---|---|
| DRAWN | SPRIGGS | 10-5-62 |
| GROUP | PARSONS | 10-23-62 |

TITLE: WIRING DIAGRAM — KING KX-150

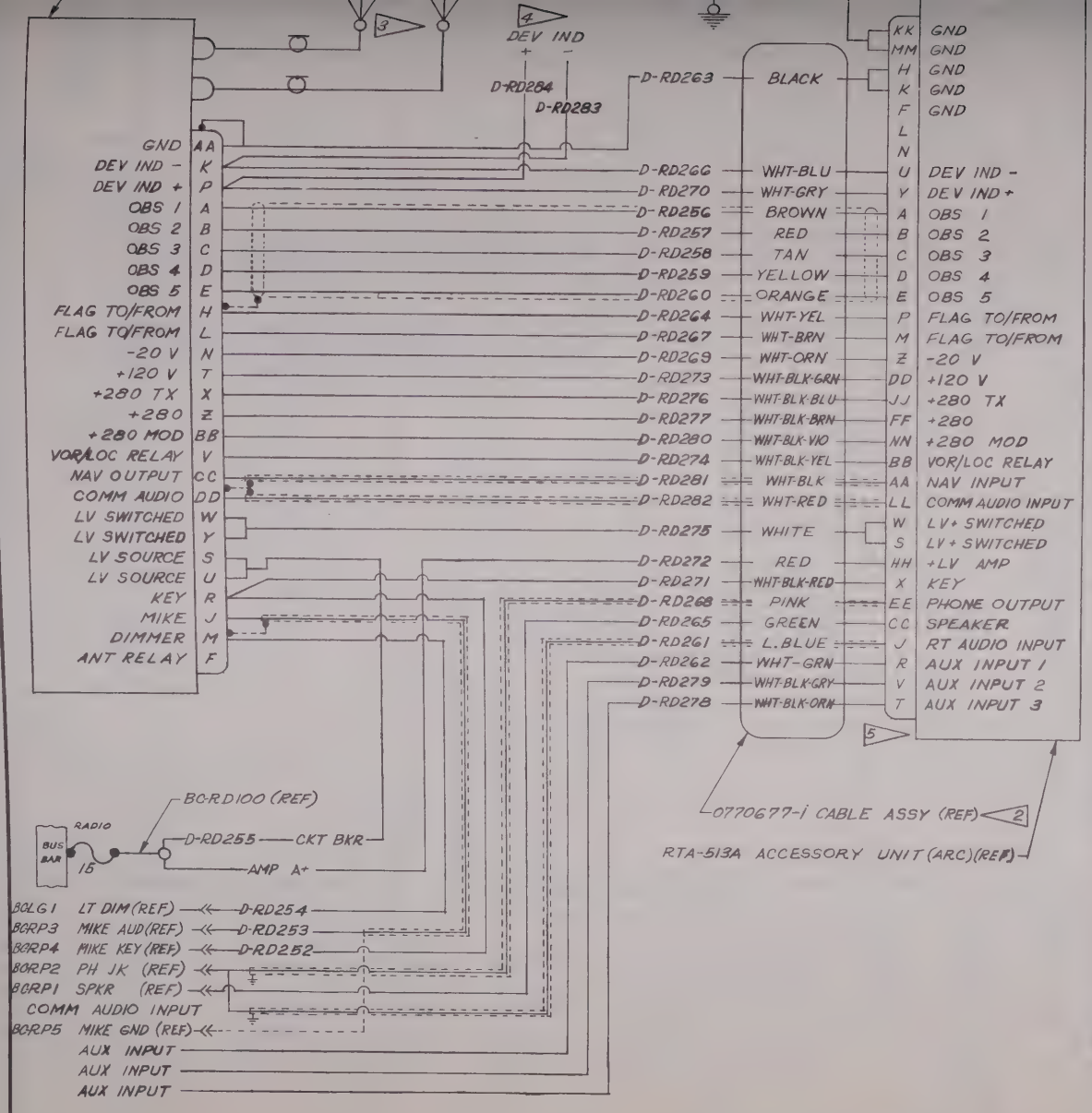


| ITEM NO | PART NO. | DESCRIPTION | INSTALLED ON |
|---|---|---|---|

EQUIPMENT TABLE

| REV | DESCRIPTION | DATE | APPROVED |
|---|---|---|---|
| A | TYPE 513A ARC TYPE 51BA VHF NAV-COM RADIO SYSTEM (OPT) | 12-4-63 | RRS |

NOTES:

1. WIRING SHOWN IS FOR SINGLE INSTALLATION. SEE PAGE 17.6.1 FOR WIRING CHANGES WHEN ADDITIONAL RADIOS ARE INSTALLED.
2. CABLE ASSY & SCHEMATIC SAME AS MODEL 182. WIRES NUMBERED D-RD256 THRU D-RD282 ARE NOT REQD WHEN 1G1548 CABLE IS USED. FOR WIRE SIZES & CODING INSTRUCTIONS (D-RD251 THRU D-RD284) SEE 0770610 PAGES 17.4 & 17.4.1.
3. ANTENNA CABLES ARE ATTACHED TO DUST COVER WHEN INSTALLED IN AIRCRAFT.
4. D-RD283 & D-RD284 SHALL BE ADDED WHEN OPTIONAL NAV-O-MATIC WITH OMNI COUPLER IS INSTALLED.
5. WIRE SHIELDS NOT GROUNDED THIS PLUG.

Inactive SER 17250573 & ON
Superseded by 0570400
G.A 5-8-63
R&M RRS

| WIRE CODE NO. | GA | MATERIAL | LG | TERMINALS | | SERIALS |
|---|---|---|---|---|---|---|
| | | | | | | |

WIRE TABLE

CESSNA AIRCRAFT CO COMMERCIAL AIRCRAFT DIVISION WICHITA KANSAS

| | NAME | DATE |
|---|---|---|
| DRAWN | SPRIGGS | 11-26-62 |
| GROUP | PARSONS | 12-3-62 |
| CHECK | R. Stuck | 11-30-62 |
| PROJ | | 12-3-62 |

TITLE: WIRING DIAGRAM — CESSNA NAV-COM 300 (ARC TYPE 513A) (OPT)

Cessna.

DWG NO: 0500062

| SUPERSEDED BY: | SUPERSEDES: | MODEL: 172, P172 | REV: A | PAGE: 17.6 |
|---|---|---|---|---|

FORM NO. 80-161

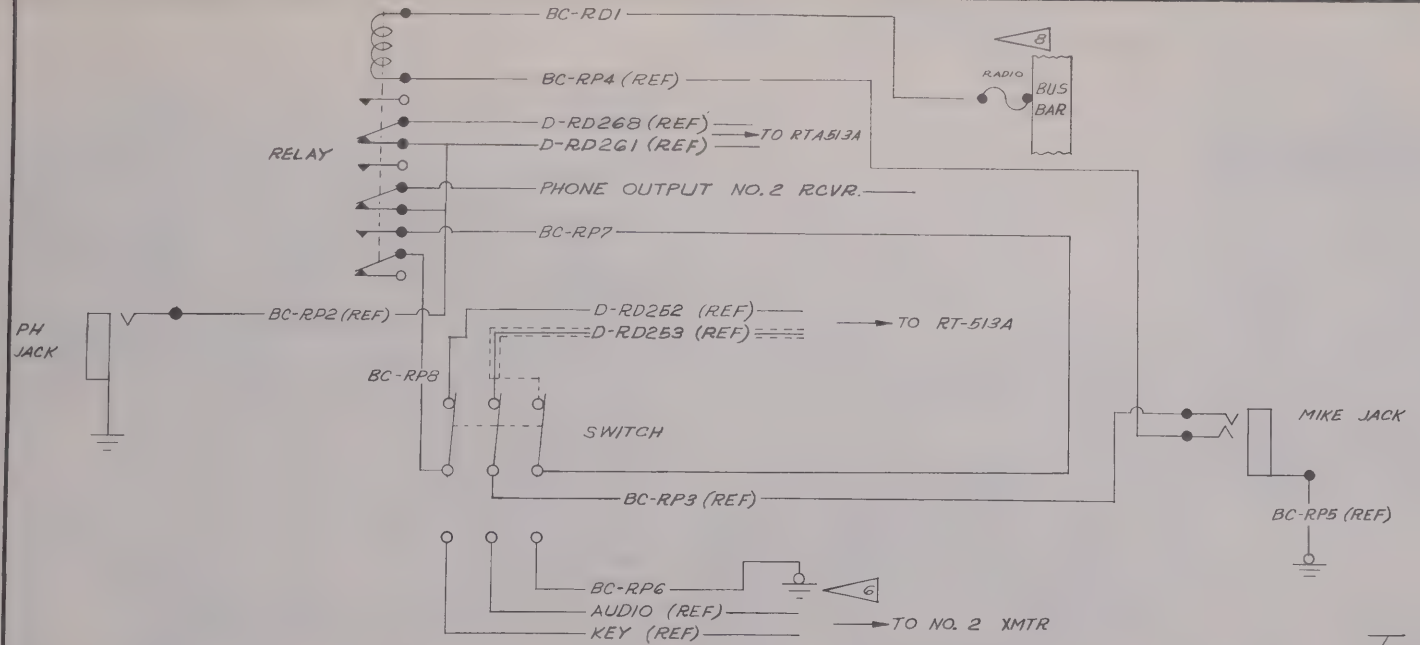


| CHG LET | REVISION | BY / DATE | CHK / APPD |
|---|---|---|---|
| A | TITLE WAS ARC TYPE 513A VHF NAV-COM RADIO SYSTEM (OPT) | RGB 12-4-63 | RES |

Inactive SER 17250573 & ON
Superseded by 0570400
G.A 5-8-63
R&M

6. WHEN NO. 2 XMTR HAS SHIELDED MIKE AUDIO OR ISOLATED MIKE GROUND, CONNECT SHIELD OR GROUND WIRE TO SWITCH TERMINAL IN PLACE OF BC-RP6.
7. NO. 2 RCVR SPKR OUTPUT SHALL BE GROUNDED THROUGH A 5 OHM, 5 WATT RESISTOR.
8. CONNECT TO SMALLEST RADIO FUSE IN USE.

| WIRE CODE NO. | GA | MATERIAL | LG | TERMINALS | | SERIALS |
|---|---|---|---|---|---|---|
| BC-RD1 | 20 | | | SOLDER | SOLDER | |
| BC-RP8 | 22 | | | SOLDER | S-1367-1-6 | |
| BC-RP7 | 22 | | | SOLDER | S-1367-1-6 | |
| BC-RP6 | 22 | | | S-1367-1-6 | S-1367-1-6 | |

WIRE TABLE

CESSNA AIRCRAFT CO COMMERCIAL AIRCRAFT DIVISION WICHITA KANSAS

| | NAME | DATE |
|---|---|---|
| DRAWN | SPRIGGS | 11-26-62 |
| GROUP | PARSONS | 12-3-62 |
| CHECK | R Stuck | 11-30-62 |
| PROJ | K Sutton | 12-3-62 |

TITLE
# WIRING DIAGRAM —
CESSNA 300 NAV/COM
(ARC TYPE 513A)
(OPT)

Cessna.

DWG NO. 0500062

| PART NO. | DESCRIPTION | INSTALLED ON |
|---|---|---|

# TABLE OF CONTENTS

## MODEL 172 - 1964 & ON
## SERIALS 17250573 & ON


| E NO. | TITLE | DATE ISSUED | REV |
|---|---|---|---|
| .1 | Wiring Diagram - Radio Audio, Power, & Lighting | 6-28-65 | C |
| .2 | Wiring Diagram - Audio Selector Switching | 6-25-65 | D Inac. |
| .3 | Wiring Diagram - Transmitter Selector Switching | 6-25-65 | C |
| .4 | Muting Relay | 6-17-65 | A |
| .2 | Wiring Diagram - King KY-95, KX-120 | 12-24-63 | A |
| .1 | Wiring Diagram - King KA-10 Isolation Amplifier | 12-7-65 | A Inac. |
| .2 | Wiring Diagram - Narco Mark 12 | | |
| .1 | Wiring Diagram - King KX-150 | 12-24-63 | Inac. |
| .2 | King KX-150A | 2-25-65 | A |
| 0 | Wiring Diagram - Narco Mark IV Superhomer | 8-19-63 | |
| 1 | Wiring Diagram - Cessna ADF 300 (ARC 521A) | 7-9-64 | A Inac. |
| 2.1.0 | Cessna Nav-Comm 300 (ARC Type 514A) | 6-25-65 | C Inac. |
| 2.1.1 | Cessna Nav-Comm 300 (ARC Type 514A) | 6-25-65 | C Inac. |
| 2.2 | Cessna Comm 300 (ARC Type 524A) | 6-25-65 | B |
| 3 | Remote Marker Beacon Lights & Sensitivity Switch | 12-5-63 | |
| 4.1 | Wiring Diagram - King KR-20 Marker Beacon | 12-5-63 | |
| 6.1 | Wiring Diagram - Cessna Marker Beacon 300 (ARC R-502B) | 10-6-65 | Inac. |
| 7.1 | Narco Mark 12 With UGR-1A & VOA-5 | 1-28-64 | |
| 9.1 | Wiring Diagram-Cessna Nav-Comm 300R (ARC Type 514R, 515R) | 6-25-65 | B |
| 1 | Wiring Diagram - Cessna ADF 300 (ARC Type 521B) | 10-16-65 | A |
| 2.1 | Cessna Nav/Omni 300 (ARC Type 525A) | 5-11-65 | |
| 4.1 | Wiring Diagram - King KN-60 DME | 11-30-64 | |
| 7.1.1 | Wiring Diagram - Pantronics DX10-DA | 4-27-65 | |
| 7.1.2 | Wiring Diagram - Pantronics DX10-DA | 10-16-65 | A |
| 7.1.3 | Wiring Diagram - Pantronics DX10-DA | 10-16-65 | A |
| 9.1.2 | Pantronics DX10-D HF Transceiver Instl. | 4-27-65 | |
| 9.1.3 | Pantronics DX10-D HF Transceiver Instl. | 4-27-65 | |
| 0.1 | W.D. Marker Beacon Cessna Nav/Omni 300 (ARC Type 525A) | 5-11-65 | |
| 0.2 | W.D. Marker Beacon Cessna 300 (ARC Type R-502B) | 10-6-65 | |
| 1.1 | W.D. Cessna Nav/Comm 300 (ARC Type 516A) | 6-25-65 | A |
| 2 1.0 | W.D. Typical Interconnect of Combination of Cessna 300 Series Radios | 6-25-65 | |
| 2 1.1 | W.D. Typical Interconnect of Combination of Cessna 300 Series Radios | 6-25-65 | |
| 3.1 | W.D. -King KX-160E Nav/Com | 8-10-65 | |
| 4 | Wiring Diagram Bendix ADF-T-12C | 8-31-65 | |
| 5.1 | W.D. -King KA-25C Audio Amplifier | 12-7-65 | |


| | | |
|---|---|---|
| essna. | TITLE: RADIO WIRING DIAGRAMS MODEL 172 | DRAWING NO. 0570400 |
| : 1966 | PAGE: 1 of 1 | |

(SR-4041) IX
XI

| CHG LET | REVISION | BY / DATE | CHK / APPD |
|---|---|---|---|
| A | ADDED GREEN AND BLK/WHT WIRES TO SPEAKER. | E.S. 1/6/63 | [illegible] |
| B | ADDED 2ND YELLOW WIRE TO DIMMING RHEOSTAT. | E.S. 12-11-63 | [illegible] |
| C | BLK 22GA WAS BLK/WHT 18GA; ADDED WIRE LENGTHS; INACTIVATED GRN, YEL, GRN, BLK & YEL WIRES. ADDED DETAIL "A" & "B"; ADDED GRN, YEL & YEL WIRES (SR4839) | W.J.R. 6-8-65 | [illegible] |

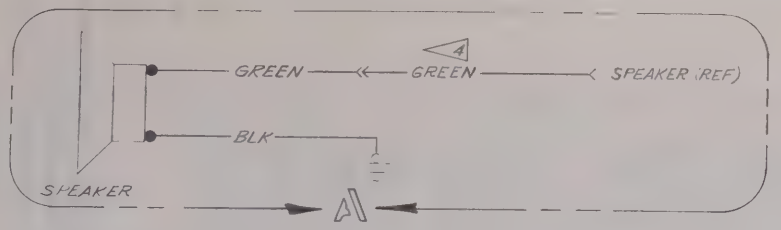

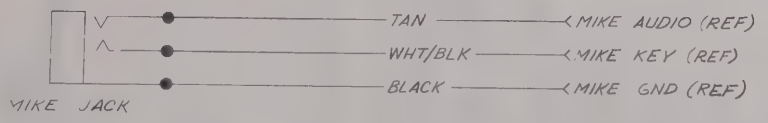

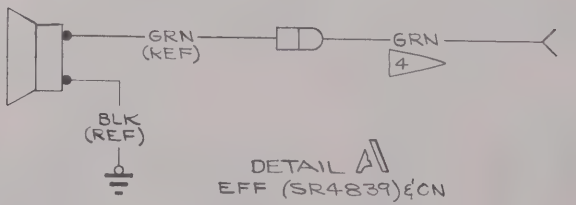


DETAIL A
EFF (SR4839) & ON

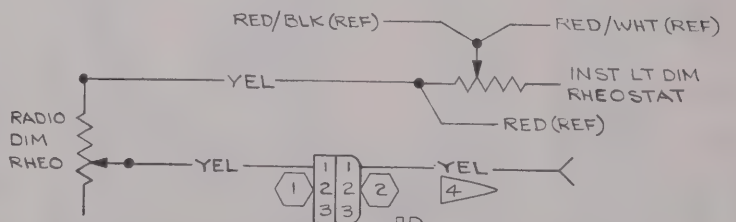


DETAIL B
EFF 17253393 & ON

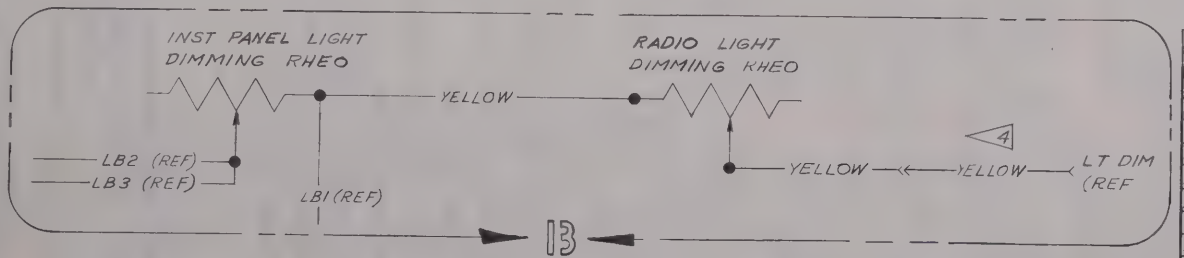


NOTES:

1. WIRES SHALL BE OF SUFFICIENT LENGTH TO CONNECT WITH ALL POSSIBLE RADIO COMBINATIONS.
2. S-341-2 CONNECTOR MAY BE REPLACED BY S-1367-1-8 AS REQD.
3. WIRE MATERIAL PER S-1460.
4. STANDARD EQUIPMENT.

| WIRE CODE NO. | GA | MATERIAL | LG | TERMINALS | | | SERIALS |
|---|---|---|---|---|---|---|---|
| YELLOW | 18 | -18-4 | 110 | S-1635-2 | S-341-2 | 4 | 17253393 & ON |
| YELLOW | 18 | -18-4 | 12 | SOLDER | S-1636-2 | | 17253393 & ON |
| GREEN | 20 | -20-5 | 125 | S-341-2 | S-1635-1 S-1637-1 | 4 | (SR4839) & ON |
| YELLOW | 18 | -18-4 | 110 | S-341-2 | S-341-2 | 4 | INACTIVE 17253393 & ON |
| BLACK | 22 | -22-0 | 9 | SOLDER | S-1367-1-10 | | INACTIVE (SR4839) & ON |
| GREEN | 20 | -20-5 | 9 | SOLDER | S-341-2 | | INACTIVE (SR4839) & ON |
| YELLOW | 18 | -18-4 | 12 | SOLDER | S-341-2 | | INACTIVE 17253393 & ON |
| YELLOW | 18 | -18-4 | 5 | SOLDER | SOLDER | | |
| RED | 16 | -16-2 | 60 | S-1367-2-6 | S-341-1 | | |
| BLACK | 22 | -22-0 | 40 | SOLDER | S-341-2 | 2 | |
| WHT/BLK | 22 | -22-9-0 | 40 | SOLDER | S-341-2 | | |
| TAN | 22 | -22-10 | 40 | SOLDER | S-341-2 | | |
| BLUE | 22 | -22-6 | 60 | SOLDER | S-341-2 | | |
| GREEN | 20 | -20-5 | 125 | S-341-2 | S-341-2 | 4 | INACTIVE (SR4839) & ON |

3 WIRE TABLE

| | | | |
|---|---|---|---|
| 2 | S-1638-2 | HOUSING-CAP | |
| 1 | S-1638-1 | HOUSING-PLUG | |

CESSNA AIRCRAFT CO., COMMERCIAL AIRCRAFT DIVISION, WICHITA, KANSAS

| | NAME | DATE |
|---|---|---|
| DRAWN | SPRIGGS | 4-12-63 |
| GROUP | PARSONS | 6-24-63 |
| CHECK | [illegible] | 6-20-63 |
| PROJ | [illegible] | 6-24-63 |

TITLE
WIRING DIAGRAM — RADIO AUDIO, POWER, & LIGHTING

Cessna.

DWG NO. [illegible]

| | | | |
|---|---|---|---|
| A | BY REV: GRY/BLU WAS WHT/TAN, GRY/GRN WAS WHT/GRN, GRY/YEL WAS WHT/YEL, GRY/RED WAS WHT/RED. ADD KA-10 REF WIRES: WAS BLU/...., BLU/YEL, BLU/GRN. ADDED DETAIL A APPLICABLE TO ARC 514A ADDED FLAG NOTE 4 (SR 4041) | E.S. | |
| B | BLU/TAN (REF) WAS BLU/BLK (REF); DELETED NOTE 4 | E.S. 9/6/63 | |
| C | BLU/TAN (3 PLS) WAS BLU/GRN, BLU/YEL, BLU/RED; BLU/RED WAS GRY/RED; BLU/YEL WAS GRY/YEL; BLU/BLK WAS GRY/BLU; BLU/GRN WAS GRY/GRN; ADDED BLUE (2) | E.S. 12-11-63 | |
| D | BY REV: SUPERSEDED BY WAS 2.31.1.1 | 4-4-65 | |

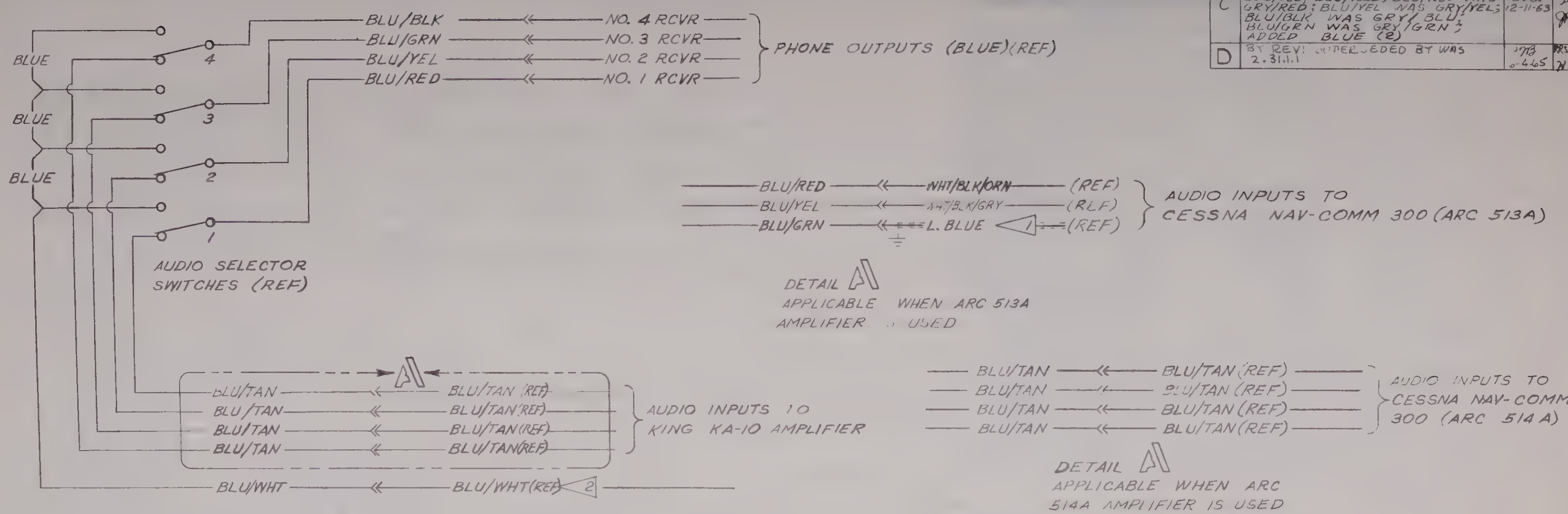


NOTES:

1. CESSNA NAV-COMM 300 PHONE OUTPUT SHALL BE SWITCHED TO LIGHT BLUE AUDIO INPUT.
2. FROM MUTING RELAY. REFER TO PAGE 2.0.3 FOR WIRING.
3. WIRE MATERIAL PER S-1460.
4.

Ser Inactive 17253393 & on 5/12/65
Sipes 5-17-65

| WIRE CODE NO | GA | MATERIAL | LG | TERMINALS | | | SERIALS |
|---|---|---|---|---|---|---|---|
| BLUE | 22 | -22-6 | 1.50 | S-1367-1-6 | S-1367-1-6 | | |
| BLUE | 22 | -22-6 | 1.50 | S-1367-1-6 | S-1367-1-6 | | |
| BLU/TAN | 22 | -22-6-10 | | S-1367-1-6 | S-341-2 | | |
| BLU/BLK | 22 | -22-6-0 | | S-1367-1-6 | S-341-2 | | |
| BLUE | 22 | -22-6 | 1.50 | S-1367-1-6 | S-1367-1-6 | (JUMPER) | |
| BLU/YEL | 22 | -22-6-4 | | S-1367-1-6 | S-341-2 | | |
| BLU/GRN | 22 | -22-6-5 | | ↑ | ↑ | | |
| BLU/RED | 22 | -22-6-2 | | | | | |
| BLU/TAN | 22 | -22-6-10 | | | | | |
| BLU/TAN | 22 | -22-6-10 | | | | | |
| BLU/TAN | 22 | -22-6-10 | | ↓ | ↓ | | |
| BLU/WHT | 22 | -22-6-9 | | S-1367-1-6 | S-341-2 | | |

WIRE TABLE (3)

| ITEM NO | PART NO | DESCRIPTION | INSTALLED ON |
|---|---|---|---|

EQUIPMENT TABLE

CESSNA AIRCRAFT CO., COMMERCIAL AIRCRAFT DIVISION, WICHITA, KANSAS

| | NAME | DATE |
|---|---|---|
| DRAWN | SPRIGGS | 4-16-63 |
| GROUP | FARSONS | 6-24-63 |
| CHECK | | |
| PROJ | [signature] | 6-24-63 |

TITLE: WIRING DIAGRAM — AUDIO SELECTOR SWITCHING

Cessna.

DWG NO 0570400

SUPERSEDED BY 0570400 PG. 2.32.1.0 | SUPERSEDES | MODEL 172, R-172 | REV D | PAGE 2.0.2

FORM NO. 80-161

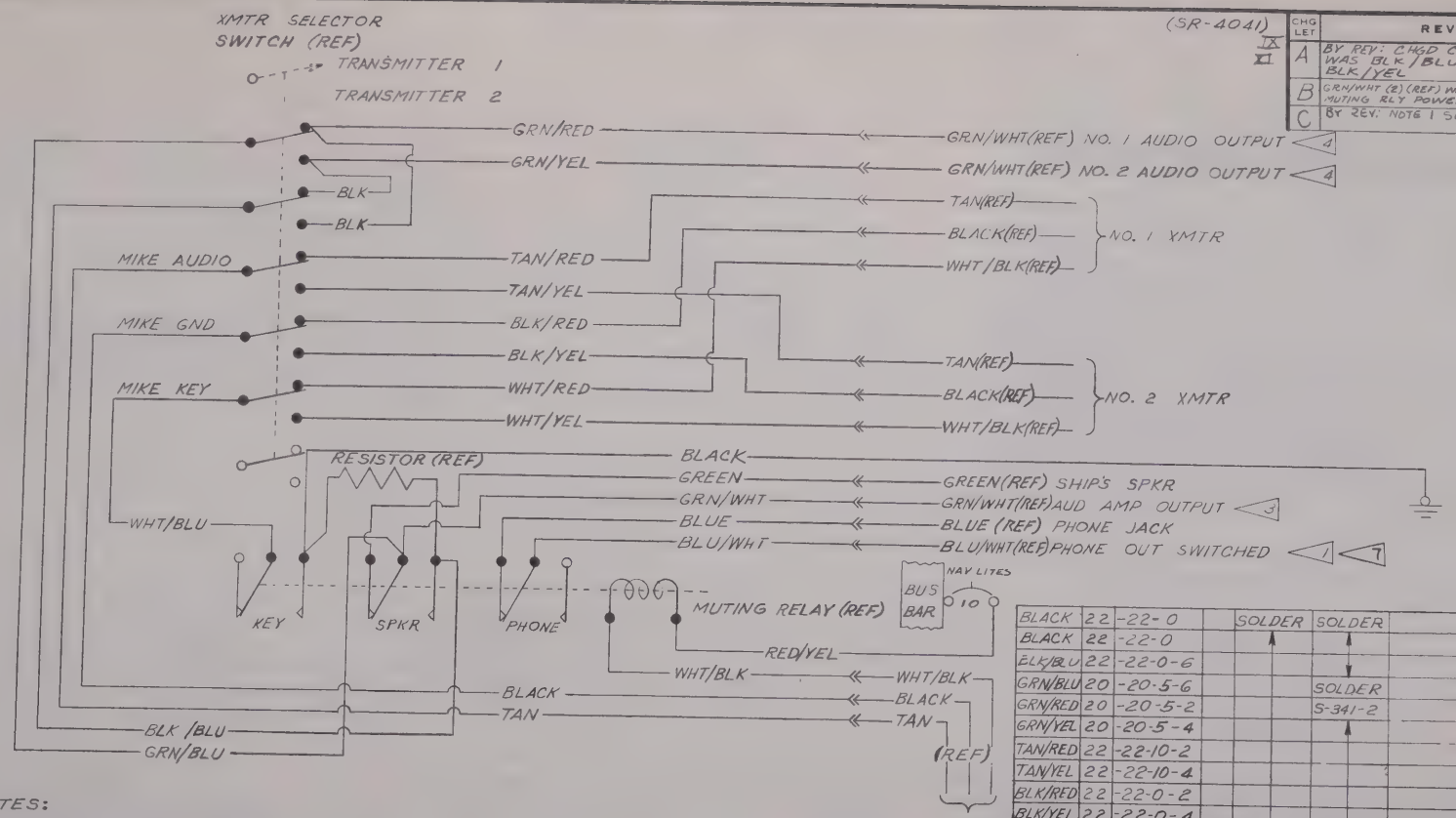


| CHG LET | REVISION | BY / DATE | CHK / APPD |
|---|---|---|---|
| A | BY REV: CHGD COLORS: BLACK WAS BLK/BLU, BLK/BLU WAS BLK/YEL (SR4041) | E S 8-7-63 | RRS |
| B | GRN/WHT (2) (REF) WAS GRN (2) (REF); MUTING RLY POWER WAS ON AUD AMP BKR. | E.S. 3-24-64 | RRS |
| C | BY REV: NOTE 1 SER OUT, ADD NOTE 7, | 4-65 | |

NOTES:

1. REFER TO PAGE 2.0.2 FOR AUDIO SELECTOR SWITCH WIRING THRU 17253392.
2. SPEAKER OUTPUTS NOT USED SHALL BE GROUNDED THROUGH A 5 OHM, 5 WATT RESISTOR.
3. GRN/WHT USED WHEN ONLY ONE AUDIO ISOLATION AMPLIFIER IS AVAILABLE.
4. GRN/RED, GRN/YEL USED WHEN TWO AUDIO ISOLATION AMPLIFIERS ARE AVAILABLE.
5. WIRES NOT USED SHALL BE SLEEVED AND TIED INTO BUNDLE.
6. WIRE MATERIAL PER S-1460.
7. REFER TO PAGE 2.32.1.0 FOR AUDIO SELECTOR SWITCH WIRING 17253393 & ON.

| WIRE CODE NO. | GA | MATERIAL | LG | TERMINALS | | SERIALS |
|---|---|---|---|---|---|---|
| BLACK | 22 | -22-0 | | SOLDER | SOLDER | |
| BLACK | 22 | -22-0 | | | | |
| BLK/BLU | 22 | -22-0-6 | | | | |
| GRN/BLU | 20 | -20-5-6 | | | SOLDER | |
| GRN/RED | 20 | -20-5-2 | | | S-341-2 | |
| GRN/YEL | 20 | -20-5-4 | | | | |
| TAN/RED | 22 | -22-10-2 | | | | |
| TAN/YEL | 22 | -22-10-4 | | | | |
| BLK/RED | 22 | -22-0-2 | | | | |
| BLK/YEL | 22 | -22-0-4 | | | | |
| WHT/RED | 22 | -22-9-2 | | | | |
| WHT/YEL | 22 | -22-9-4 | | | S-341-2 | |
| WHT/BLU | 22 | -22-9-6 | | | SOLDER | |
| BLACK | 22 | -22-0 | | | S-1367-1-10 | |
| GREEN | 20 | -20-5 | | | S-341-2 | |
| GRN/WHT | 20 | -20-5-9 | | | | |
| BLUE | 22 | -22-6 | | | | |
| BLU/WHT | 22 | -22-6-9 | | | S-341-2 | |
| RED/YEL | 22 | -22-2-4 | | | S-1367-1-6 | |
| WHT/BLK | 22 | -22-9-0 | | | S-341-2 | |
| BLACK | 22 | -22-0 | | | S-341-2 | |
| TAN | 22 | -22-10 | | SOLDER | S-341-2 | |

6 WIRE TABLE

CESSNA AIRCRAFT CO. COMMERCIAL AIRCRAFT DIVISION, WICHITA, KANSAS

| | NAME | DATE |
|---|---|---|
| DRAWN | SPRIGGS | 4-17-63 |
| GROUP | PARSONS | 4-24-63 |
| CHECK | R. [illegible] | 6-19-63 |
| PROJ | [illegible] | 6-24-63 |

TITLE: WIRING DIAGRAM — TRANSMITTER SELECTOR SWITCHING

Cessna.

DWG NO

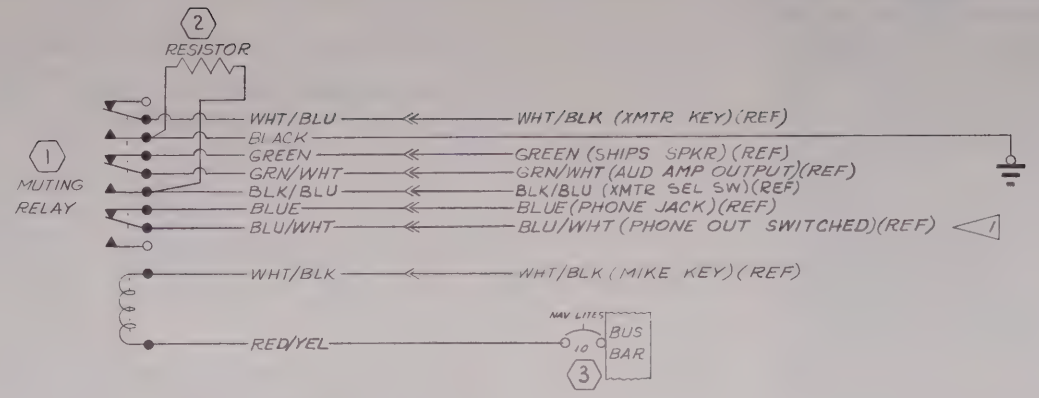


T16 MUTING RELAY INSTL. (REF)

NOTES:

1. REFER TO PAGE 2.0.2 FOR AUDIO SELECTOR SWITCH WIRING.
2. WIRE MATERIAL PER S-1460.
3. SPEAKER OUTPUTS NOT USED SHALL BE GROUNDED THROUGH A 5 OHM 5 WATT RESISTOR.

| WIRE CODE NO | GA | MATERIAL | LG | TERMINALS | | SERIALS |
|---|---|---|---|---|---|---|
| BLK/BLU | 22 | -22-0-6 | | SOLDER | S 341-2 | |
| BLACK | 22 | -22-0 | | SOLDER | S-1367-1-10 | |
| WHT/BLU | 22 | 22-9-6 | | | S-341-2 | |
| GREEN | 20 | -20-5 | | | | |
| GRN/WHT | 20 | . 0-5-9 | | | | |
| BLUE | 22 | -22-6 | | | | |
| BLU/WHT | 22 | -22-6-9 | | | | |
| WHT/BLK | 22 | -.2-9-0 | | | S-341-2 | |
| RED/YEL | 22 | 22-2-4 | | SOLDER | S-1367-1-6 | |

2 WIRE TABLE

| ITEM NO | PART NO | DESCRIPTION | INSTALLED ON |
|---|---|---|---|
| 3 | S-1360-10 | CIRCUIT BREAKER | |
| 2 | 5 Ω 5W 10% | RESISTOR (OM) | |
| 1 | 1205-GC12 | RELAY (GN) | |

EQUIPMENT TABLE

CESSNA AIRCRAFT CO., COMMERCIAL AIRCRAFT DIVISION; WICHITA, KANSAS

| | NAME | DATE |
|---|---|---|
| DRAWN | SPRIGGS | 2-26-64 |
| GROUP | PARSONS | 3-30-64 |
| CHECK | [illegible] | 3-24-64 |
| PROJ | [illegible] | 3-30-64 |

TITLE: WIRING DIAGRAM — MUTING RELAY

Cessna.

DWG NO 0570400

| SUPERSEDED BY | SUPERSEDES | MODEL 172 | REV A | PAGE 2.0.4 |
|---|---|---|---|---|

FORM NO. 80-161

(SR-4041) IX XI

| CHG LET | REVISION | BY / DATE | CHK / APPD |
|---|---|---|---|
| A | ADDED DETAIL A, NOTE 3, GRY/RED, GRY/GRN. (SR-4463) | E.S. 12-14-63 | RWK |

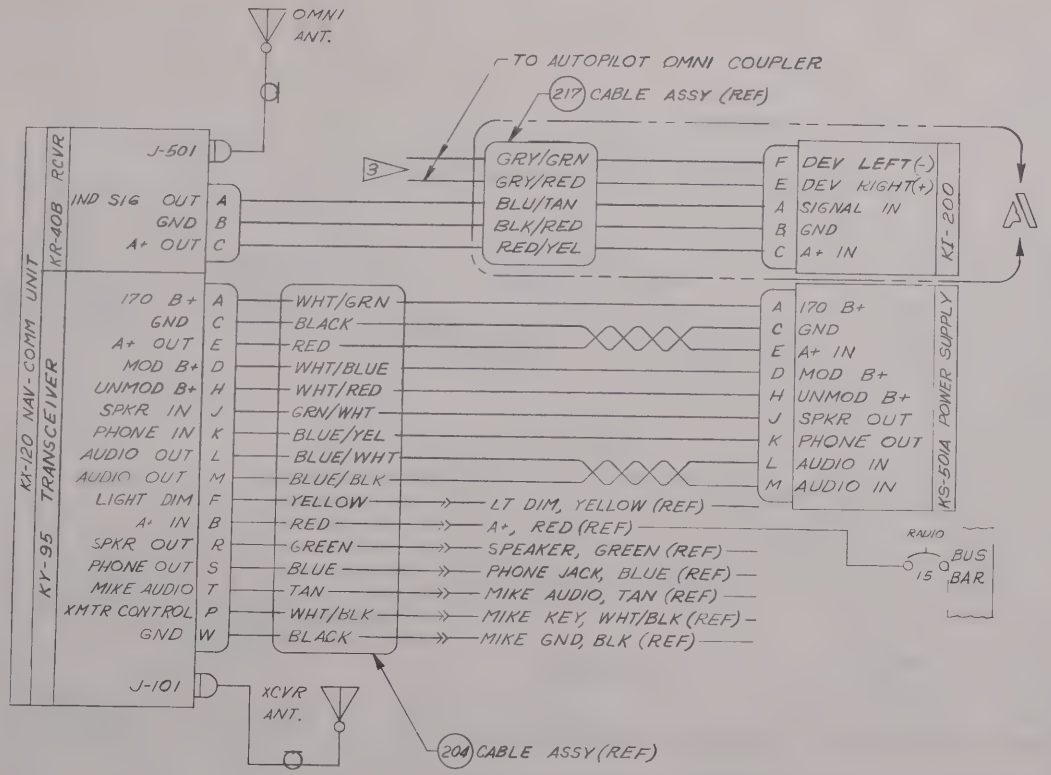


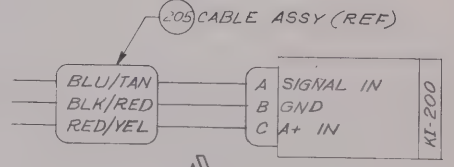


DETAIL A1
17250573 THRU (SR 4463)

NOTES:
1. WIRING SHOWN IS FOR SINGLE INSTALLATION. SEE PAGES 2.0.2 & 2.0.3 FOR WIRING CHANGES WHEN INSTALLED WITH OTHER UNITS.
2. WIRE MATERIAL PER S-1460.
3. WIRES NOT USED SHALL BE SLEEVED AND TIED INTO BUNDLE.

| WIRE CODE NO. | GA | MATERIAL | LG | TERMINALS | | | SERIALS |
|---|---|---|---|---|---|---|---|
| GRY/GRN | 22 | -22-8-5 | | SOLDER | | | (SR 4463) & ON |
| GRY/RED | 22 | -22-8-2 | | SOLDER | | | (SR 4463) & ON |
| BLU/TAN | 22 | -22-6-10 | | SOLDER | SOLDER | | |
| BLK/RED | 22 | -22 0-2 | | SOLDER | | | |
| RED/YEL | 22 | -22-2-4 | | SOLDER | | | |
| BLACK | 22 | -22-0 | | S-341-2 | | | |
| BLACK | 16 | -16-0 | | SOLDER | | | |
| RED | 16 | -16-2 | | | | | |
| WHT/GRN | 22 | -22-9-5 | | | | | |
| WHT/BLU | 22 | -22-9-6 | | | | | |
| WHT/RED | 22 | -22-9-2 | | | | | |
| GRN/WHT | 20 | -20-5-9 | | | | | |
| BLU/YEL | 22 | -22-6-4 | | | | | |
| BLU/WHT | 22 | -22-6-9 | | | | | |
| BLU/BLK | 22 | -22-6-0 | | SOLDER | | | |
| YELLOW | 18 | -18-4 | | S-341-2 | | | |
| RED | 16 | -16-2 | | S-341-1 | | | |
| GREEN | 20 | -20-5 | | S-341-2 | | | |
| BLUE | 22 | -22-6 | | S-341-2 | | | |
| TAN | 22 | -22-10 | | S-341-2 | | | |
| WHT/BLK | 22 | -22-9-0 | | S-341-2 | SOLDER | | |

2 WIRE TABLE

CESSNA AIRCRAFT CO., COMMERCIAL AIRCRAFT DIVISION, WICHITA, KANSAS

| | NAME | DATE |
|---|---|---|
| DRAWN | SPRIGGS | 4-10-63 |
| GROUP | PARSONS | 6-24-63 |
| CHECK | C. Stark | 6-19-63 |
| PROJ | [illegible] | 6-24-63 |

TITLE: WIRING DIAGRAM — KING KY-95, KX-120

Cessna.

DWG NO 0570400

| ITEM | PART NO | DESCRIPTION | INSTALLED ON |
|---|---|---|---|

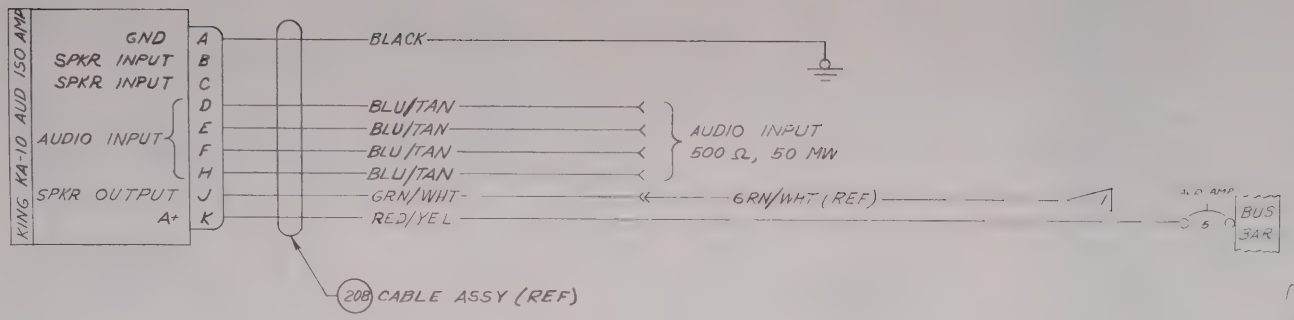


NOTES:

1. TO MUTING RELAY. REFER TO PAGE 2.0.3 FOR WIRING.
2. WIRE MATERIAL PER S-1460.
3. WIRES NOT USED SHALL BE SLEEVED AND TIED INTO BUNDLE.

| WIRE CODE NO. | GA | MATERIAL | LG | TERMINALS | | SERALS |
|---|---|---|---|---|---|---|
| BLACK | 22 | 22-0 | | SOLDER | S-1367-1-10 | |
| BLU/TAN | 22 | 22-6-10 | | | S-341-2 | |
| BLU/TAN | 22 | 22-6-10 | | | | |
| BLU/TAN | 22 | 22-6-10 | | | | |
| BLU/TAN | 22 | 22-6-10 | | | | |
| GRN/WHT | 20 | 20-5-9 | | | S-341-2 | |
| RED/YEL | 22 | 22-2-4 | | SOLDER | S-1367-1-6 | |

2 WIRE TABLE

| ITEM NO | PART NO. | DESCRIPTION | INSTALLED ON |
|---|---|---|---|
| | | EQUIPMENT TABLE | |

CESSNA AIRCRAFT CO. COMMERCIAL AIRCRAFT DIVISION, WICHITA, KANSAS

| | NAME | DATE |
|---|---|---|
| DRAWN | J.RIGGS | 4-19-63 |
| GROUP | PARSONS | 6-24-63 |
| CHECK | [illegible] | 6-19-63 |
| PROJ | [illegible] | 6-24-63 |

TITLE: WIRING DIAGRAM — KING KA-10 ISOLATION AMPLIFIER

Cessna.

DWG NO. 0570400

| SUPERSEDED BY | SUPERSEDES | MODEL | REV | PAGE |
|---|---|---|---|---|
| 0570400 PP 2.35.1 | | 172, R-172 | A | 2.7.1 |

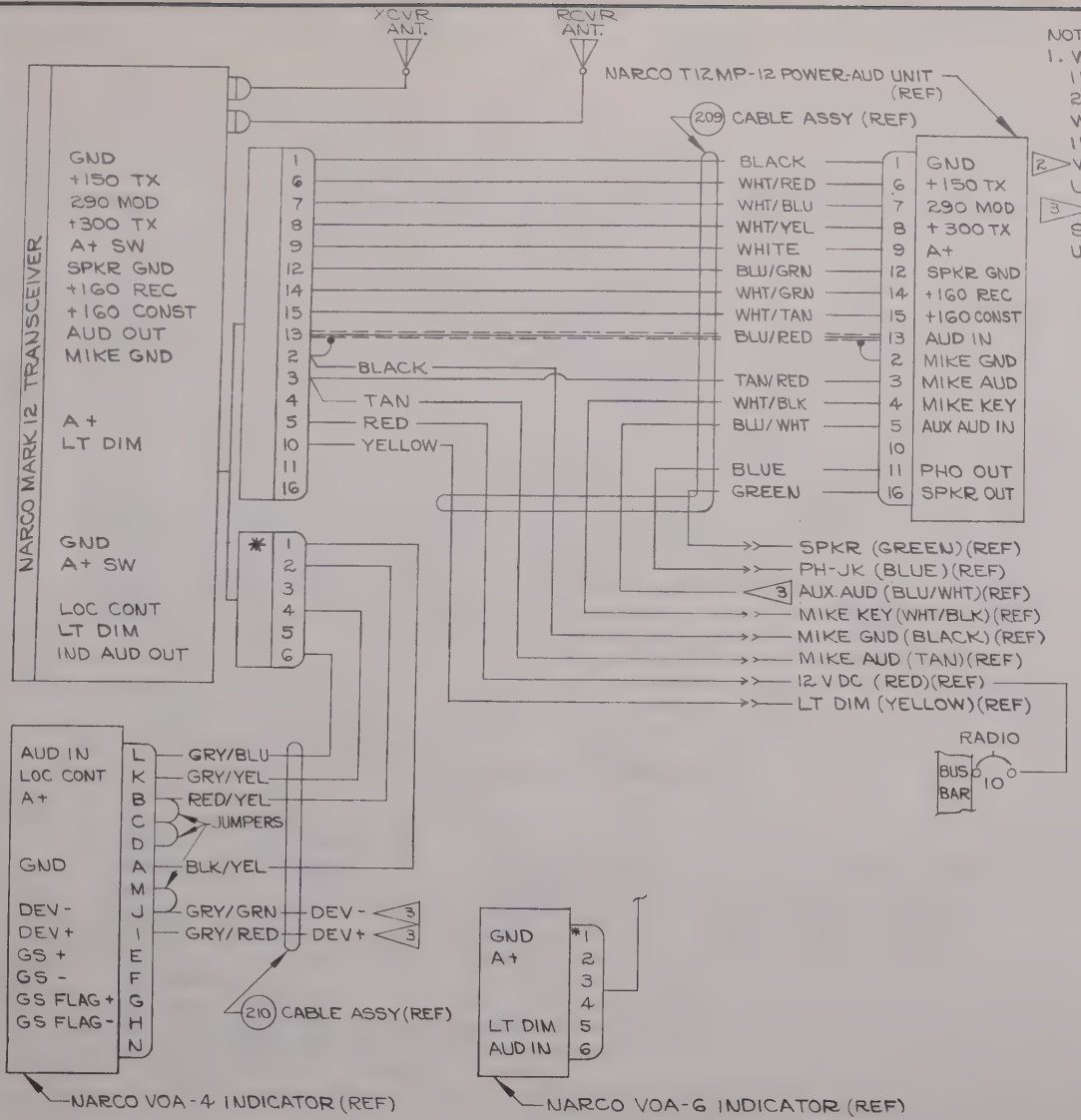


NOTES:
1. WIRING SHOWN IS FOR SINGLE INSTALLATION. SEE PAGE 2.0.2 & 2.0.3 FOR WIRING CHANGES WHEN ADDITIONAL RADIOS ARE INSTALLED.
2. WIRE MATERIAL PER S-1460 UNLESS OTHERWISE NOTED.
3. END OF WIRE SHALL BE SLEEVED AND TIED INTO CABLE UNTIL USED

(SP-4041) IX XI

| CHG LET | REVISION | BY DATE | CHK APPD |
|---|---|---|---|
| | | | |

| WIRE CODE NO. | GA | MATERIAL | LG | TERMINALS | | | SERIALS |
|---|---|---|---|---|---|---|---|
| GREEN | 20 | -20-5 | | SOLDER | S-341-2 | | |
| GRY/BLU | 22 | -22-8-6 | | | SOLDER | | |
| GRY/YEL | 22 | -22-8-4 | | | SOLDER | | |
| GRY/GRN | 22 | -22-8-5 | | | | | |
| GRY/RED | 22 | -22-8-2 | | | | | |
| RED/YEL | 22 | -22-2-4 | | | SOLDER | | |
| BLK/YEL | 22 | -22-0-4 | | | SOLDER | | |
| BLACK | 22 | -22-0 | | | S-341-2 | | |
| TAN | 22 | -22-10 | | | S-341-2 | | |
| WHT/TAN | 22 | -22-9-10 | | | SOLDER | | |
| WHT/GRN | 22 | -22-9-5 | | | SOLDER | | |
| BLU/RED | 22 | S.914461-22-6-2 | | | SOLDER | | |
| BLU/GRN | 22 | -22-6-5 | | | SOLDER | | |
| BLUE | 22 | -22-6 | | | S-341-2 | | |
| WHT/YEL | 22 | -22-9-4 | | | SOLDER | | |
| WHT/BLU | 22 | -22-9-6 | | | SOLDER | | |
| WHT/RED | 22 | -22-9-2 | | | SOLDER | | |
| BLU/WHT | 22 | -22-6-9 | | | | | |
| WHT/BLK | 22 | -22-9-0 | | | S-341-2 | | |
| TAN/RED | 22 | -22-10-2 | | | SOLDER | | |
| YELLOW | 18 | -18-4 | | | S-341-2 | | |
| RED | 16 | -16-2 | | | S-341-1 | | |
| BLACK | 16 | -16-0 | | | SOLDER | | |
| WHITE | 14 | | | SOLDER | SOLDER | | |

2 WIRE TABLE

CESSNA AIRCRAFT CO. COMMERCIAL AIRCRAFT DIVISION WICHITA KANSAS

| | NAME | DATE |
|---|---|---|
| DRAWN | GILES | 5-22-63 |
| GROUP | PARSONS | 6-24-63 |
| CHECK | R. Stuck | 6-20-63 |
| PROJ | Wattles | 6-24-63 |

TITLE: WIRING DIAGRAM — NARCO MARK 12

Cessna.

DWG NO. 0530400

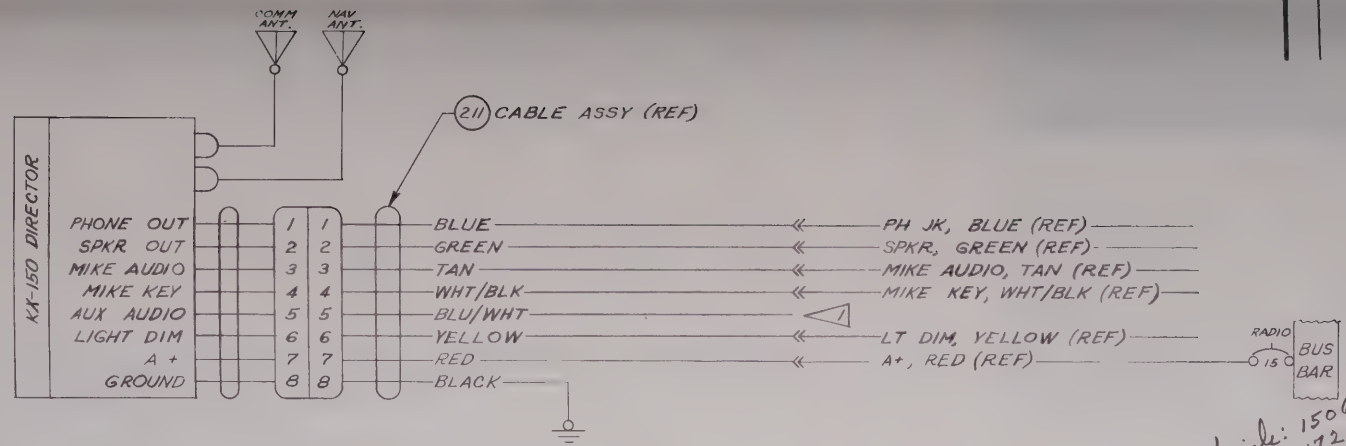


Inactive Serials: 15060465 & on
17251371 & on
12-14-63
E. Spriggs
RRS
R-[illegible]

NOTES:

1. SLEEVE AND TIE INTO BUNDLE UNTIL USED.
2. WIRING SHOWN IS FOR SINGLE INSTALLATION. SEE PAGES 2.0.2 & 2.0.3 FOR WIRING CHANGES WHEN INSTALLED WITH OTHER UNITS.
3. WIRE MATERIAL PER S-1460.

| WIRE CODE NO. | GA | MATERIAL | LG | TERMINALS | | | SERIALS |
|---|---|---|---|---|---|---|---|
| BLU/WHT | 22 | -22-6-9 | | SOLDER | | | |
| BLACK | 16 | -16 0 | | | S 1367-210 | | |
| RED | 16 | -16-2 | | | S-341-1 | | |
| YELLOW | 18 | -18-4 | | | S-341-2 | | |
| WHT/BLK | 22 | -22-9-0 | | | | | |
| TAN | 22 | -22-10 | | | | | |
| GREEN | 20 | -20-5 | | | | | |
| BLUE | 22 | -22-6 | | SOLDER | S-341-2 | | |

3 WIRE TABLE

CESSNA AIRCRAFT CO. COMMERCIAL AIRCRAFT DIVISION WICHITA KANSAS

| | NAME | DATE |
|---|---|---|
| DRAWN | SPRIGGS | 5-17-63 |
| GROUP | PARSONS | 6-24-63 |
| CHECK | R. Stuck | 6-20-63 |
| PROJ | [illegible] | 6-24-63 |

TITLE: WIRING DIAGRAM — KING KX-150

Cessna.

DWG NO. 0570400

| SUPERSEDED BY | SUPERSEDES | MODEL | REV. | PAGE |
|---|---|---|---|---|
| 2.9.2 | | 172, R-172 | | 2.9.1 |

| ITEM NO | PART NO. | DESCRIPTION | INSTALLED ON |
|---|---|---|---|

EQUIPMENT TABLE

FORM NO. 80-161

(SR 4463)

| CHG LET | REVISION | BY / DATE | CHK / APPD |
|---|---|---|---|
| A | KX-150B WAS KX-150A. ADD NOTE 4<br>ADD KX-150BE TO TITLE (SR 4731) | GLW<br>1-23-65 | 285 |

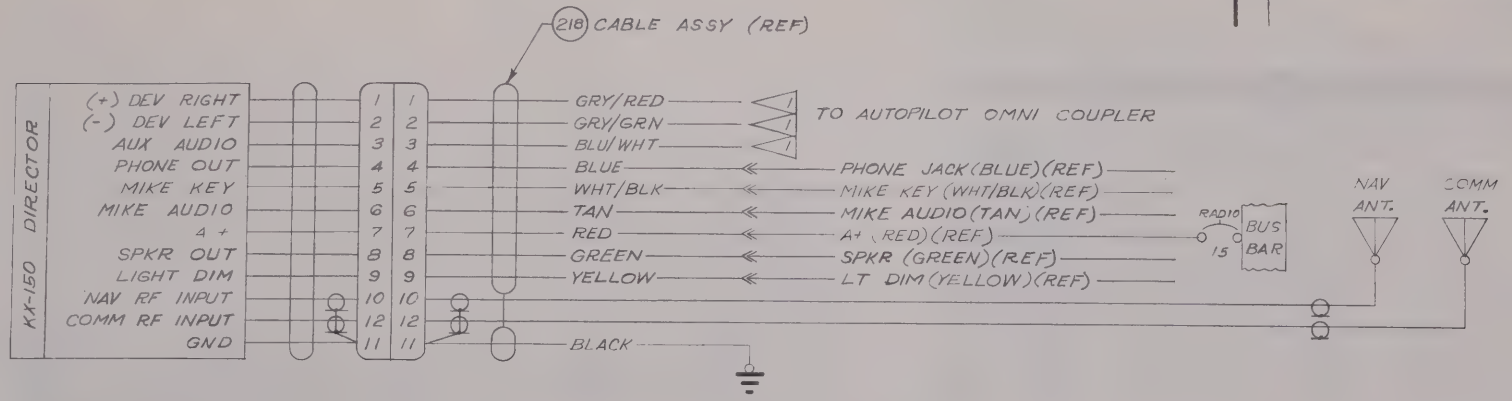


NOTES:

1. WIRES NOT USED SHALL BE SLEEVED AND TIED INTO BUNDLE.
2. WIRE MATERIAL PER S-1460.
3. WIRING SHOWN IS FOR SINGLE INSTALLATION. SEE PAGES 2.0.2 & 2.0.3 FOR WIRING CHANGES WHEN INSTALLED WITH OTHER UNITS.
4. THE KX-150B & KX-150BE ARE ELECTRICALLY & MECHANICALLY INTERCHANGEABLE WITH KX-150A & KX-150AE.

| WIRE CODE NO. | GA | MATERIAL | LG | TERMINALS | | SERIALS |
|---|---|---|---|---|---|---|
| GRY/RED | 22 | -22-8-2 | | SOLDER | | |
| GRY/GRN | 22 | -22-8-5 | | | | |
| BLU/WHT | 22 | -22-6-9 | | | | |
| BLUE | 22 | -22-6 | | | S-341-2 | |
| WHT/BLK | 22 | -22-9-0 | | | S-341-2 | |
| TAN | 22 | -22-10 | | | S-341-2 | |
| RED | 16 | -16-2 | | | S-341-1 | |
| GREEN | 20 | -20-5 | | | S-341-2 | |
| YELLOW | 18 | -18-4 | | | S-341-2 | |
| BLACK | 16 | -16-0 | | SOLDER | S-1367-2-10 | |

2 WIRE TABLE

CESSNA AIRCRAFT CO., COMMERCIAL AIRCRAFT DIVISION, WICHITA, KANSAS

| | NAME | DATE |
|---|---|---|
| DRAWN | SPRIGGS | 12-16-63 |
| GROUP | PARSONS | 12-23-63 |
| CHECK | [illegible] | 12-20-63 |
| PROJ | [illegible] | 12-24-63 |

TITLE: WIRING DIAGRAM — KING KX-150B & KX-150BE

Cessna.

DWG NO. 05-70400

1. WIRING SHOWN IS FOR SINGLE INSTALLATION. SEE PAGES 2.0.2 & 2.0.3 FOR CHANGES WHEN INSTALLED WITH OTHER UNITS.
2 > VENDOR SUPPLIED WIRES.

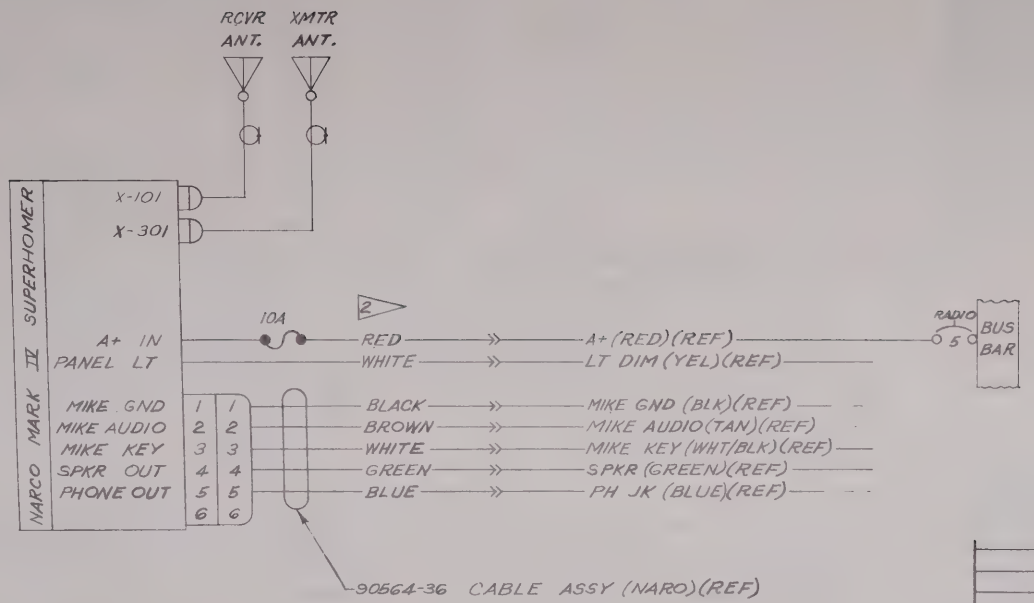


| WIRE CODE NO. | GA | MATERIAL | LG | TERMINALS | | SERIALS |
|---|---|---|---|---|---|---|
| RED | | 2 | | S-341-2 | | |
| WHT | | | | | | |
| BLK | | | | | | |
| BRN | | | | | | |
| WHT | | | | | | |
| GRN | | | | | | |
| BLU | | 2 | | S-341-2 | | |

WIRE TABLE

| ITEM NO. | PART NO. | DESCRIPTION | INSTALLED ON |
|---|---|---|---|

EQUIPMENT TABLE

CESSNA AIRCRAFT CO COMMERCIAL AIRCRAFT DIVISION WICHITA KANSAS

| | NAME | DATE |
|---|---|---|
| DRAWN | SPRIGGS | 6-25-63 |
| GROUP | PARSONS | 8-16-63 |
| CHECK | L Stuck | 8-13-63 |
| PROJ | Pettit | 8-19-63 |

TITLE: WIRING DIAGRAM — NARCO MARK IV SUPERHOMER

Cessna.

DWG NO: 0570400

| SUPERSEDED BY | SUPERSEDES | MODEL: 172, R172 | REV: | PAGE: 2.10 |
|---|---|---|---|---|

FORM NO. 80-161

(SR-4041)
IX VI

| CHG LET | REVISION | BY / DATE | CHK / APPD |
|---|---|---|---|
| A | ADDED NOISE FILTER CIRCUIT, RED WIRE | E.S 2-4-64 | RRS |

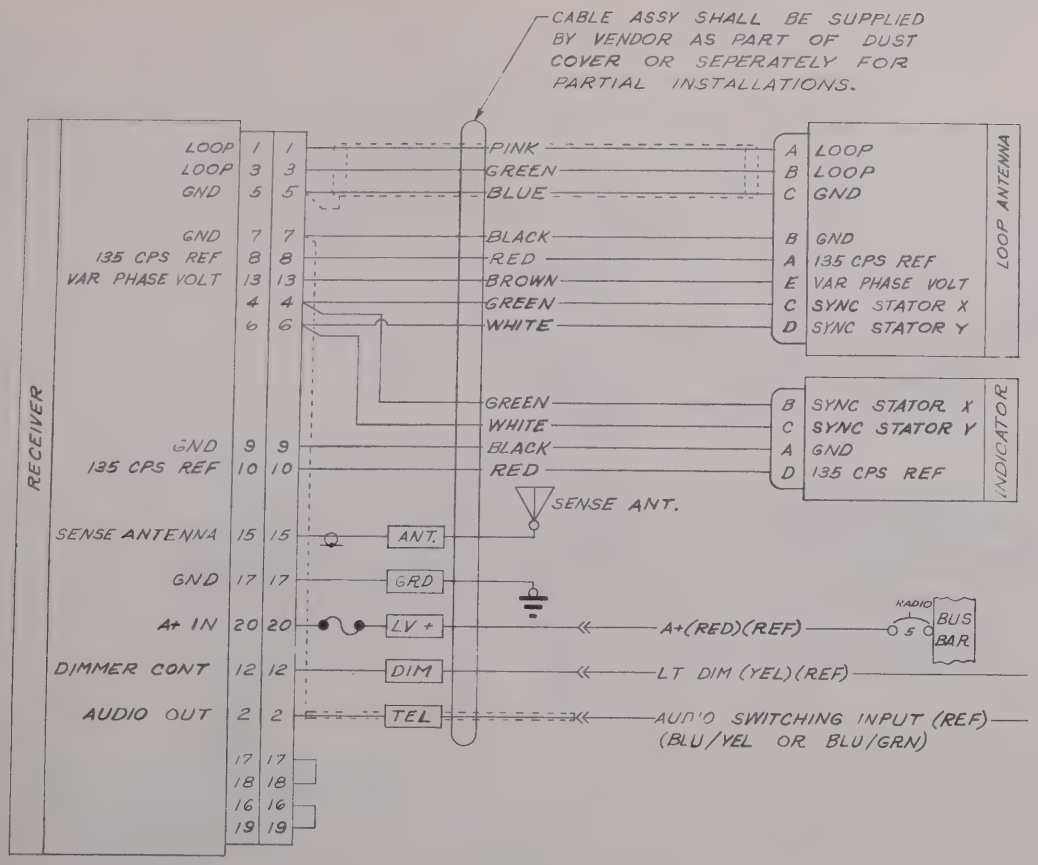


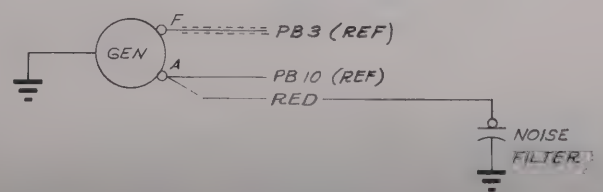


Inactive 17251823 E. on
E. Spriggs 6-23-64
RRS
RRS

| WIRE CODE NO. | GA | MATERIAL | LG | TERMINALS | | SHIELD TERMINALS | SERIALS |
|---|---|---|---|---|---|---|---|
| RED | 16 | S-1460-16-2 | | S-1367-2-12 | S-1367-2-8 | | |
| ANT. | | | | S-1367-1-10 | | S-1367-2-10 | |
| GRD | | | | S-1367-1-10 | | | |
| LV+ | | | | S-341-2 | | | |
| DIM | | | | S-341-2 | | | |
| TEL | | | | S-341-2 | | | |

WIRE TABLE

CESSNA AIRCRAFT CO. COMMERCIAL AIRCRAFT DIVISION, WICHITA, KANSAS

| | NAME | DATE |
|---|---|---|
| DRAWN | SPRIGGS | 8-6-63 |
| GROUP | PARSONS | 8-16-63 |
| CHECK | R Stuck | 8-14-63 |
| PROJ | [illegible] | 8-19-63 |

TITLE
WIRING DIAGRAM — CESSNA ADF 300 (ARC TYPE 521A)

Cessna.

DWG NO

| | | | |
|---|---|---|---|
| A | GRN/WHT WAS GRN/YEL, GRN/YEL WAS GRN (REF); BLU/RED, BLU/YEL, BLU/GRN (REF) WAS GRY/RED, GRY/YEL, GRY/GRN (REF); BLU/TAN (REF) WAS BLU/RED, BLU/YEL, BLU/GRN, BLU/TAN (REF) | 1-9-64 | |
| B | ADDED SHEET 2.12.1.1; 2.12.1.0 WAS 2.12.1 (SR4439) | E.S. 2-27-64 | |
| C | PAGE 2.12.1.0 1 AUD TERMINAL T WAS D, 4 AUD TERMINAL D WAS T, SUPERSEDED BY WAS 2.31.1.0 PAGE 2.12.1.1 SUPERSEDED BY WAS 2.31.1.1 | 6-14-65 | |

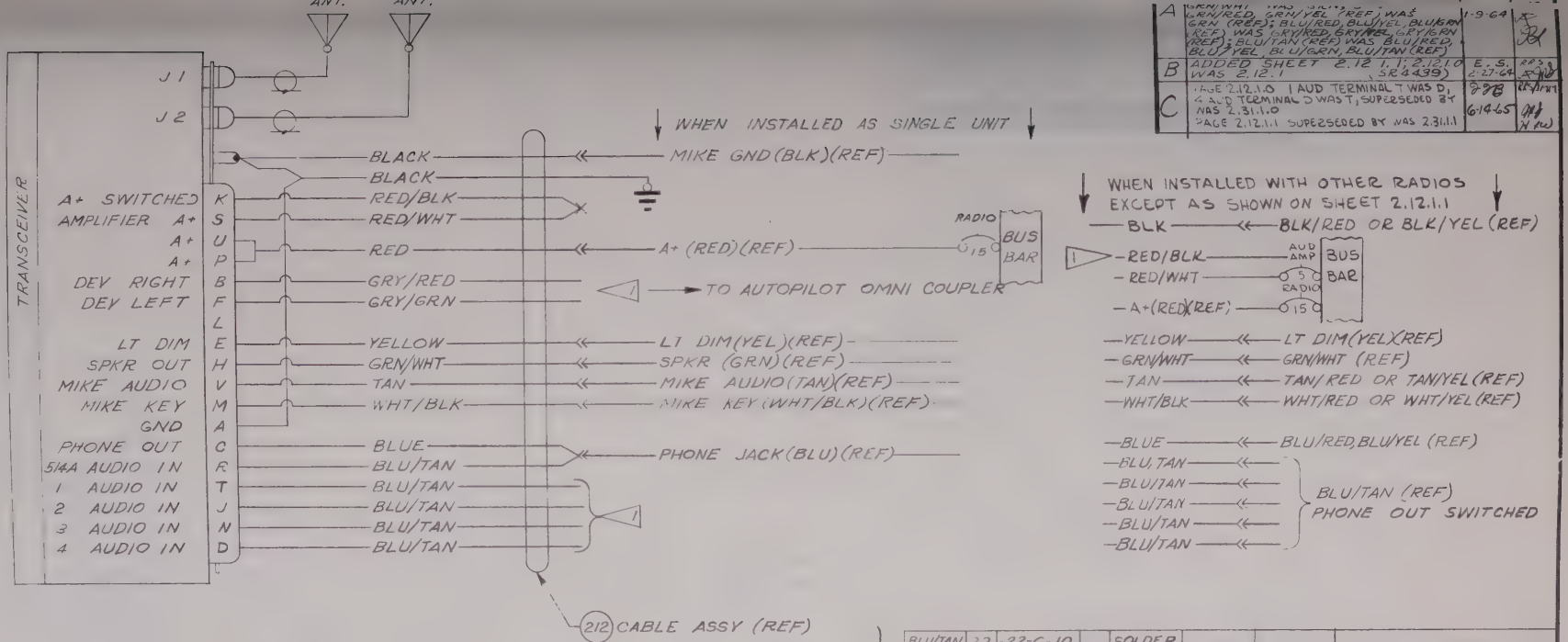


Inactive
Ser 17253393 & on
Sipes 4/29/65

NOTES:
1. WIRES NOT USED SHALL BE SLEEVED AND TIED INTO BUNDLE.
2. WIRE MATERIAL PER S-1460.

| WIRE CODE NO | GA | MATERIAL | LG | TERMINALS | | | SERIALS |
|---|---|---|---|---|---|---|---|
| BLU/TAN | 22 | -22-6-10 | | SOLDER | | | |
| BLU/TAN | 22 | -22-6-10 | | | | | |
| BLU/TAN | 22 | -22-6-10 | | | | | |
| GRY/GRN | 22 | -22-8-5 | | | | | |
| GRY/RED | 22 | -22-8-2 | | | | | |
| BLU/TAN | 22 | -22-6-10 | | | | | |
| BLU/TAN | 22 | -22-6-0 | | | | | |
| BLUE | 22 | -22-6 | | | S-341-1 | | |
| BLACK | 22 | -22-0 | | | S-341-2 | | |
| WHT/BLK | 22 | -22-9-0 | | | | | |
| TAN | 22 | -22-10 | | | | | |
| GRN/WHT | 20 | -20-5-9 | | | | | |
| YELLOW | 18 | -18-4 | | | S-341-2 | | |
| RED | 16 | -16-2 | | | S-341-1 | | |
| RED/WHT | 18 | -18-2-9 | | | S-1370-1 | | |
| RED/BLK | 18 | -18-2-0 | | | | | |
| BLACK | 16 | -16-0 | | SOLDER | S-1367-2-10 | | |

2 WIRE TABLE

| ITEM NO | PART NO. | DESCRIPTION | INSTALLED ON |
|---|---|---|---|
| | | | |

EQUIPMENT TABLE

CESSNA AIRCRAFT CO., COMMERCIAL AIRCRAFT DIVISION, WICHITA, KANSAS

| | NAME | DATE |
|---|---|---|
| DRAWN | SPRIGGS | 8-15-63 |
| GROUP | PARSONS | 10-2-63 |
| CHECK | R. Stuck | 9-25-63 |
| PROJ | [illegible] | 10-2-63 |

TITLE: WIRING DIAGRAM — CESSNA NAV-COMM 300 (ARC TYPE 514A)

Cessna.

DWG NO. 0570400

SUPERSEDED BY 0570400 PG. 2.31.1 | SUPERSEDES | MODEL 172, R-172 | REV C | PAGE 2.12.1.0

| CHG LET | REVISION | BY DATE | CHK APPD |
|---|---|---|---|

WHEN INSTALLED WITH OTHER TRANSCEIVERS THAT ALSO INCORPORATE AN ALWAYS HOT AUDIO ISOLATION AMPLIFIER

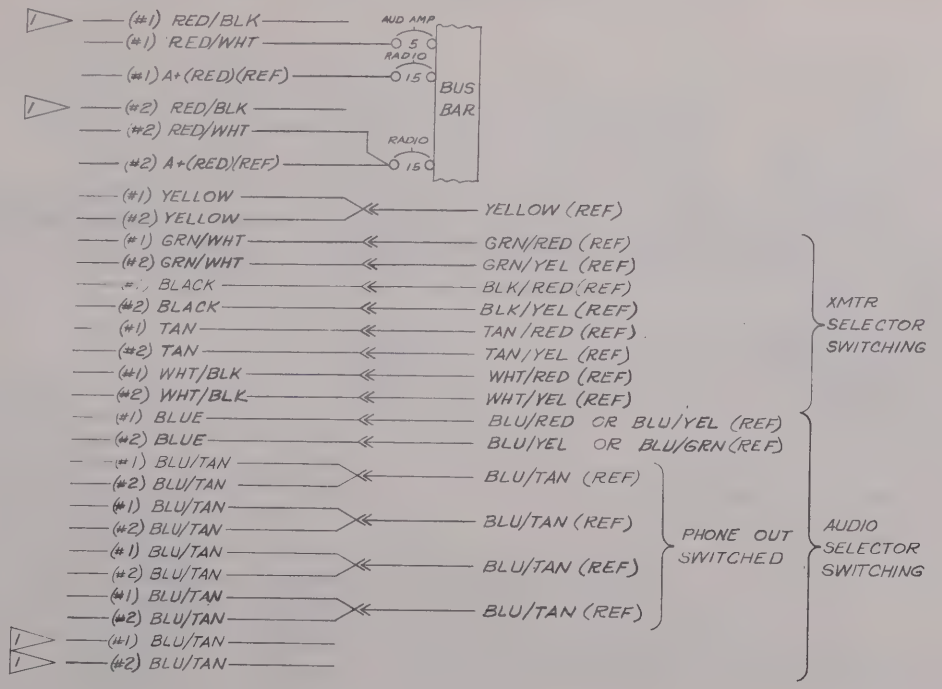


WHEN INSTALLED WITH ADF AND/OR MARKER BEACON RECEIVER ONLY

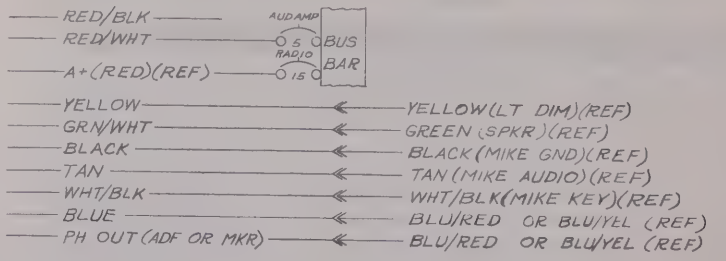


Inactive * & on Ser 17253393 & on Sipes 4/30/65

5-7-65

| WIRE CODE NO | GA | MATERIAL | LG | TERMINALS | | SERIALS |
|---|---|---|---|---|---|---|
| | | | | | | |

WIRE TABLE

CESSNA AIRCRAFT CO. COMMERCIAL AIRCRAFT DIVISION, WICHITA, KANSAS

| | NAME | DATE |
|---|---|---|
| DRAWN | SPRIGGS | 8-15-63 |
| GROUP | PARSONS | 10-2-63 |
| CHECK | R. STUCK | 9-25-63 |
| PROJ | SATTLER | 10-2-63 |

TITLE: WIRING DIAGRAM — CESSNA NAV-COMM 300 (ARC TYPE 514A)

Cessna.

DWG NO

| | | | |
|---|---|---|---|
| A | ADD THRU SERIAL ... TO NOTE 2; ADD S-1557-1 TO BLU/TAN WIRES (4); ADD EQUIPMENT TABLE; BE CAPPED AND" WAS "BE SLEEVED AND" IN NOTE 1 (SR4663) | 4/29/65 | |
| B | BY REV NOTE 2 PAGE 2.32.1.1 NOS 2.31.1.1 | 6-14-65 | |

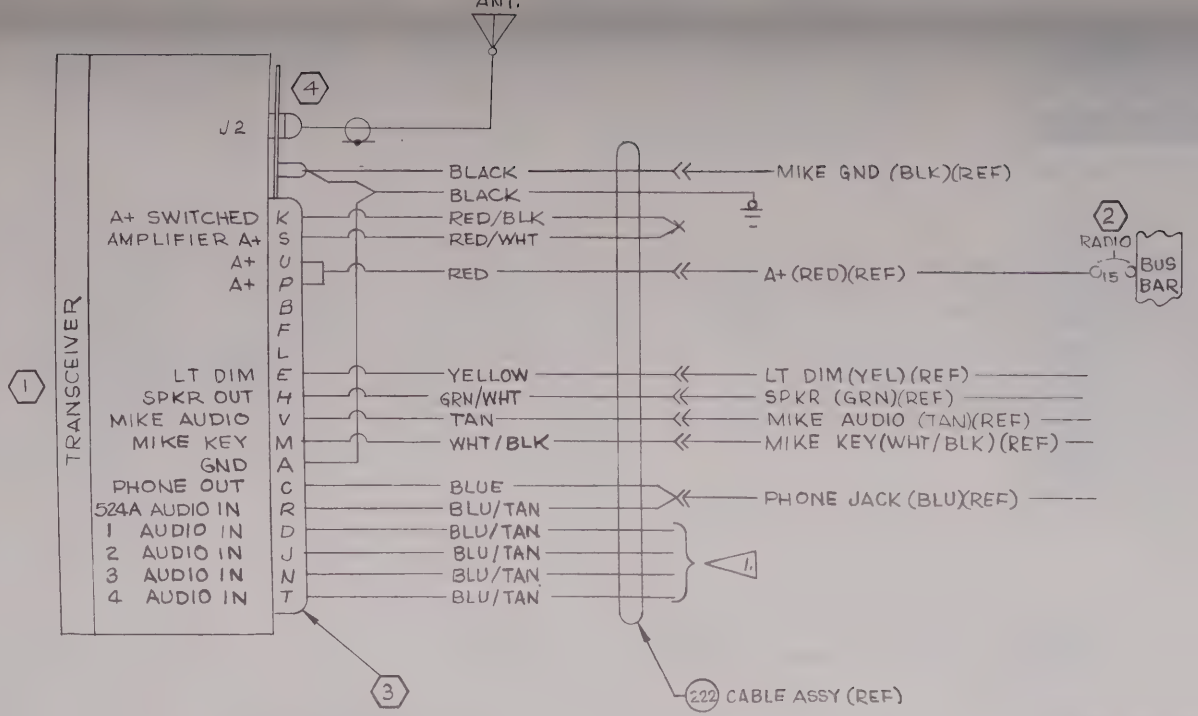


NOTES;

1. WIRES NOT USED SHALL BE CAPPED AND TIED INTO BUNDLE.
2. WIRING SHOWN IS FOR SINGLE INSTALLATION, SEE PAGES 2.12.1.0 AND 2.12.1.1 FOR WIRING ON MULTIPLE INSTALLATIONS THRU SER 17253392. SEE PAGE 2.32.1.1 SER 17253393 & ON FOR MULTIPLE INSTL.
3. WIRE MATERIAL PER S-1460

| WIRE CODE NO | GA | MATERIAL | LG | TERMINALS | | | SERIALS |
|---|---|---|---|---|---|---|---|
| BLU/TAN | 22 | -22-6-10 | | SOLDER | S-1557-1 | | |
| BLU/TAN | 22 | -22-6-10 | | | | | |
| BLU/TAN | 22 | -22-6-10 | | | | | |
| BLU/TAN | 22 | -22-6-10 | | | S-1557-1 | | |
| BLU/TAN | 22 | -22-6-10 | | | COMMON TO BLUE | | |
| BLUE | 22 | -22-6 | | | S-341-1 | | |
| BLACK | 22 | -22-0 | | | S-341-2 | | |
| WHT/BLK | 22 | -22-9-0 | | | S-341-2 | | |
| TAN | 22 | -22-10 | | | S-341-2 | | |
| GRN/WHT | 20 | 20-5-9 | | | S-341-2 | | |
| YELLOW | 18 | -18-4 | | | S-341-2 | | |
| RED | 16 | -16-2 | | | S-341-2 | | |
| RED/WHT | 18 | -18-2-9 | | | COMMON TO RED/BLK | | |
| RED/BLK | 18 | -18-2-0 | | | S-1370-1 | | |
| BLACK | 16 | -16-0 | | SOLDER | S-1367-2-10 | | |

3. WIRE TABLE

| ITEM NO | PART NO. | DESCRIPTION | INSTALLED ON |
|---|---|---|---|
| 4 | 29753 | CONNECTOR (ARC) | |
| 3 | 29747-0018 | CONNECTOR (ARC) | |
| 2 | S-1360-15 | CKT BKR | |
| 1 | 31390-1114 | XCVR (RT-524A)(ARC) | |

EQUIPMENT TABLE

CESSNA AIRCRAFT CO., COMMERCIAL AIRCRAFT DIVISION, WICHITA, KANSAS

| | NAME | DATE |
|---|---|---|
| DRAWN | COOK | 8-6-64 |
| GROUP | PARSONS | 8-13-64 |
| CHECK | [illegible] | 8-11-64 |
| PROJ | H Wire | 8-11-64 |

TITLE: WIRING DIAGRAM — CESSNA COMM 300 (ARC TYPE 524 A)

Cessna.

DWG NO. 0570400

SUPERSEDED BY | SUPERSEDES | MODEL 172 | REV B | PAGE 2.12.2

(SP-4425)

| CHG LET | REVISION | BY DATE | CHK APPD |
|---|---|---|---|
| | | | |

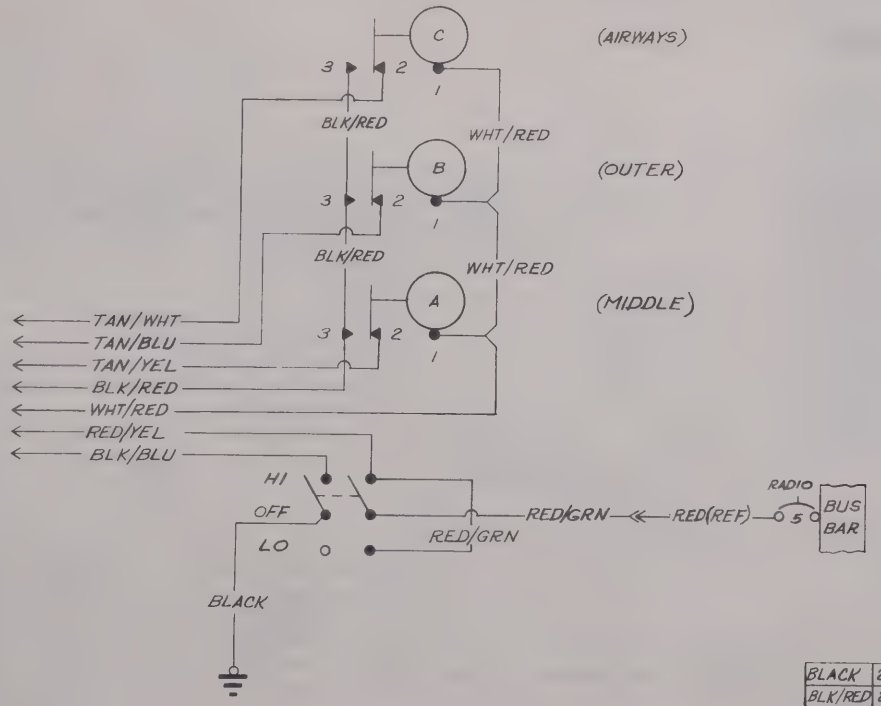


NOTES:
1. WIRE MATERIAL PER S-1460.

| WIRE CODE NO. | GA | MATERIAL | LG | TERMINALS | | SERIALS |
|---|---|---|---|---|---|---|
| BLACK | 22 | -22-0 | 4.0 | SOLDER | S-1361-1-6 | |
| BLK/RED | 22 | -22-0-2 | 1.0 | | SOLDER | |
| BLK/RED | 22 | -22-0-2 | 1.0 | | | |
| WHT/RED | 22 | -22-9-2 | 1.0 | | | |
| WHT/RED | 22 | -22-9-2 | 1.0 | | SOLDER | |
| BLK/RED | 22 | -22-0-2 | 8.0 | | S-341-2 | |
| WHT/RED | 22 | -22-9-2 | 8.0 | | | |
| TAN/WHT | 22 | -22-10-9 | 8.0 | | | |
| TAN/BLU | 22 | -22-10-6 | 8.0 | | | |
| TAN/YEL | 22 | -22-10-4 | 8.0 | | | |
| BLK/BLU | 22 | -22-0-6 | 8.0 | | | |
| RED/GRN | 20 | -20-2-5 | 8.0 | | S-341-2 | |
| RED/GRN | 20 | -20-2-5 | .5 | | SOLDER | |
| RED/YEL | 22 | -22-2-4 | 8.0 | SOLDER | S-341-2 | |

1 WIRE TABLE

CESSNA AIRCRAFT CO COMMERCIAL AIRCRAFT DIVISION WICHITA KANSAS

| | NAME | DATE |
|---|---|---|
| DRAWN | S.PRIGGS | 11-8-63 |
| GROUP | PARSONS | 12-4-63 |
| CHECK | C. Stuck | 12-4-63 |
| PROJ | [illegible] | 12-5-63 |

TITLE: WIRING DIAGRAM — REMOTE MARKER BEACON LIGHTS & [illegible]

Cessna.

DWG NO 0530400

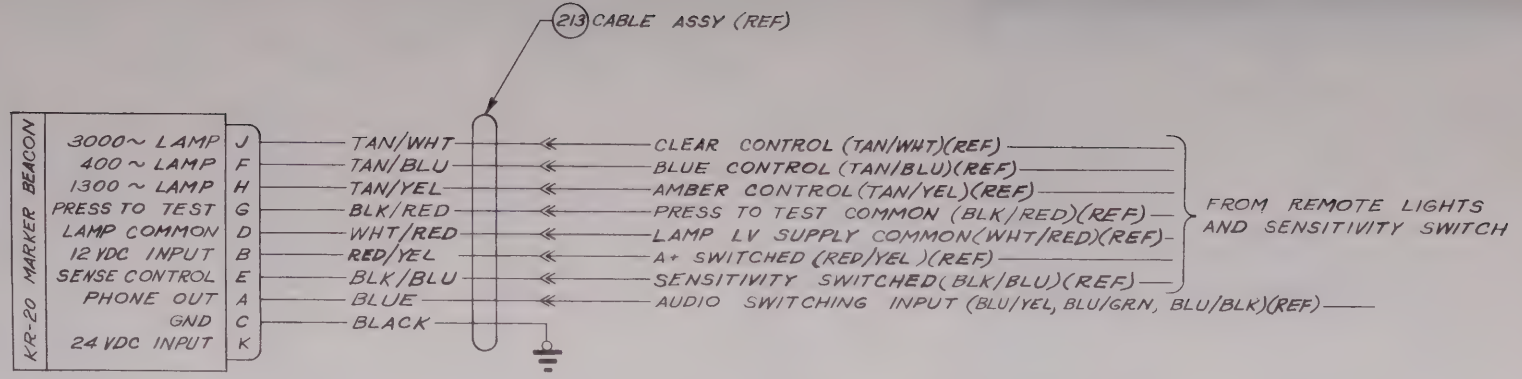


NOTES:
1. WIRE MATERIAL PER S-1460.

| WIRE CODE NO. | GA | MATERIAL | LG | TERMINALS | | SERIALS |
|---|---|---|---|---|---|---|
| TAN/WHT | 22 | -22-10-9 | | SOLDER | S-341-2 | |
| TAN/BLU | 22 | -22-10-6 | | | | |
| TAN/YEL | 22 | -22-10-4 | | | | |
| BLK/RED | 22 | -22-0-2 | | | | |
| WHT/RED | 22 | -22-9-2 | | | | |
| RED/YEL | 22 | -22-2-4 | | | | |
| BLK/BLU | 22 | -22-0-6 | | | | |
| BLUE | 22 | -22-6 | | | S-341-2 | |
| BLACK | 22 | -22-0 | | SOLDER | S-1367-1-8 | |

1 WIRE TABLE

CESSNA AIRCRAFT CO. COMMERCIAL AIRCRAFT DIVISION: WICHITA KANSAS

| | NAME | DATE |
|---|---|---|
| DRAWN | SPRIGGS | 11-11-63 |
| GROUP | PARSONS | 12-4-63 |
| CHECK | R. Stuck | 12-4-63 |
| PROJ | J.D. Sallee | 12-5-63 |

TITLE: WIRING DIAGRAM — KING KR-20 MARKER BEACON

Cessna.

DWG NO. 0570400

| SUPERSEDED BY: | SUPERSEDES. | MODEL: | REV: | PAGE: |
|---|---|---|---|---|
| | | 172, R172 | | 2-14-1 |

| ITEM NO | PART NO. | DESCRIPTION | INSTALLED ON |
|---|---|---|---|

EQUIPMENT TABLE

FORM NO. 80-161

(SR-4425)

| CHG LET | REVISION | BY / DATE | CHK / APPD |
|---|---|---|---|
| | | | |

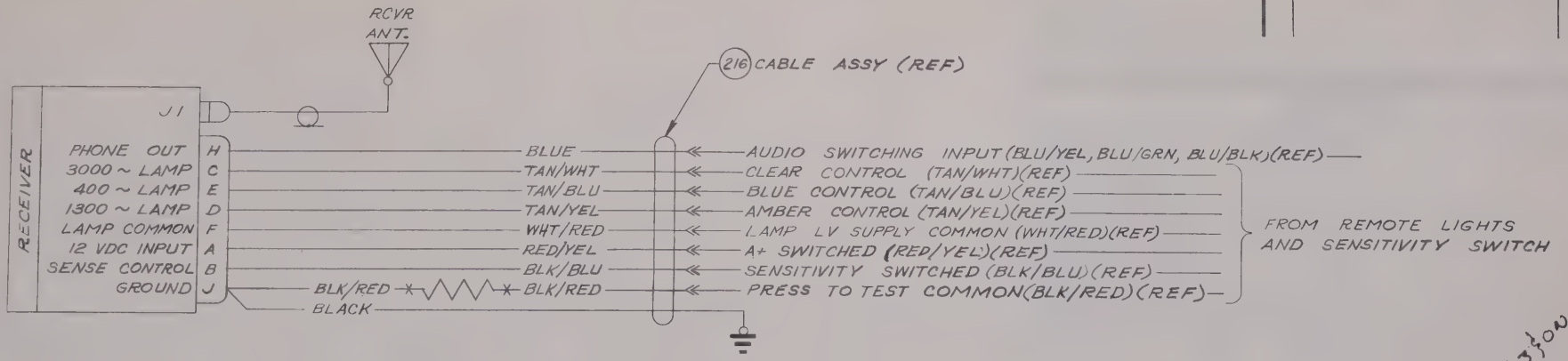


Inactive Sw 172 53393 & ON
9-13-65
WRC
9-28-65
HLW
RRS
JRS

NOTES:
1. WIRE MATERIAL PER S-1460.

| WIRE CODE NO. | GA | MATERIAL | LG | TERMINALS | | | SERIALS |
|---|---|---|---|---|---|---|---|
| BLACK | 22 | -22-0 | | SOLDER | S-1367-1-6 | | |
| BLK/RED | 22 | -22-0-2 | | S-1370-0 | S-341-2 | | |
| BLK/RED | 22 | -22-0-2 | | SOLDER | S-1370-0 | | |
| BLK/BLU | 22 | -22-0-6 | | | S-341-2 | | |
| RED/YEL | 22 | -22-2-4 | | | | | |
| WHT/RED | 22 | -22-9-2 | | | | | |
| TAN/YEL | 22 | -22-10-4 | | | | | |
| TAN/BLU | 22 | -22-10-6 | | | | | |
| TAN/WHT | 22 | -22-10-9 | | | | | |
| BLUE | 22 | -22-6 | | SOLDER | S-341-2 | | |

1 WIRE TABLE

CESSNA AIRCRAFT CO. COMMERCIAL AIRCRAFT DIVISION, WICHITA, KANSAS

| | NAME | DATE |
|---|---|---|
| DRAWN | SPRIGGS | 12-3-63 |
| GROUP | PARSONS | 12-20-63 |
| CHECK | R. Stuck | 12-19-63 |
| PROJ | [illegible] | 12-20-63 |

TITLE
WIRING DIAGRAM — CESSNA MARKER BEACON 300 (ARC

Cessna.

DWG NO.

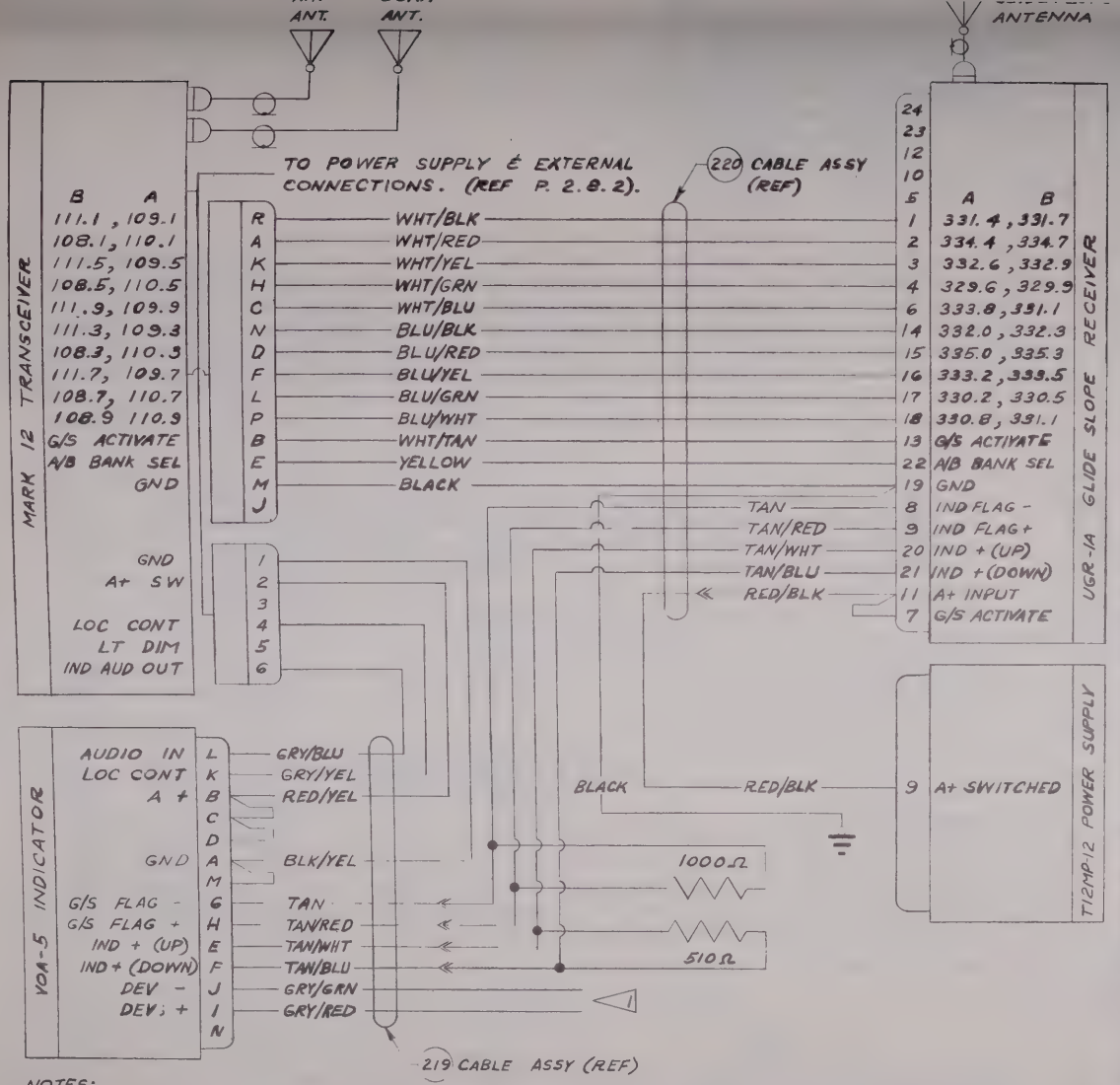


NOTES:

1. WIRES NOT USED SHALL BE SLEEVED AND TIED INTO BUNDLE.
2. WIRE MATERIAL PER S-1460.

| WIRE CODE NO | GA | MATERIAL | TERMINALS | | SERIALS |
|---|---|---|---|---|---|
| TAN | 22 | -22-10 | SOLDER | S-341-2 | |
| TAN/RED | 22 | -22-10-2 | | | |
| TAN/WHT | 22 | -22-10-9 | | | |
| TAN/BLU | 22 | -22-10-6 | | | |
| RED/BLK | 18 | -18-2-0 | | | |
| RED/BLK | 18 | -18-2-0 | | S-341-2 | |
| BLACK | 18 | -18-0 | | S-1367-1-8 | |
| WHT/BLK | 22 | -22-9-0 | | SOLDER | |
| WHT/RED | 22 | -22-9-2 | | | |
| WHT/YEL | 22 | -22-9-4 | | | |
| WHT/GRN | 22 | -22-9-5 | | | |
| WHT/BLU | 22 | -22-9-6 | | | |
| BLU/BLK | 22 | -22-6-0 | | | |
| BLU/RED | 22 | -22-6-2 | | | |
| BLU/YEL | 22 | 22-6-4 | | | |
| BLU/GRN | 22 | -22-6-5 | | | |
| BLU/WHT | 22 | -22-6-9 | | | |
| WHT/TAN | 22 | -22-9-10 | | | |
| YELLOW | 18 | -18-4 | | | |
| BLACK | 18 | -18-0 | | | |
| GRY/BLU | 22 | -22-8-6 | | | |
| GRY/YEL | 22 | -22-8-4 | | | |
| RED/YEL | 22 | -22-2-4 | | | |
| BLK/YEL | 22 | -22-0 4 | | SOLDER | |
| TAN | 22 | -22-10 | | S-341-2 | |
| TAN/RED | 22 | -22-10-2 | | | |
| TAN/WHT | 22 | -22-10-9 | | | |
| TAN/BLU | 22 | -22-10-6 | | S-341-2 | |
| GRY/GRN | 22 | -22-8-4 | | | |
| GRY/RED | 22 | -22-8-2 | SOLDER | | |

WIRE TABLE

| ITEM NO | PART NO. | DESCRIPTION | INSTALLED ON |
|---|---|---|---|

EQUIPMENT TABLE

CESSNA AIRCRAFT CO., COMMERCIAL AIRCRAFT DIVISION, WICHITA, KANSAS

| | NAME | DATE |
|---|---|---|
| DRAWN | SPRIGGS | 12-19-63 |
| GROUP | PARKAM | 1-20-64 |
| CHECK | | -20-64 |
| PROJ | | 1-24-64 |

WIRING DIAGRAM — NARCO MARK 12 WITH UGR-1A & VOA-5

Cessna.

DWG NO 0570400

| SUPERSEDED BY | SUPERSEDES | MODEL | REV | PAGE |
|---|---|---|---|---|
| | | 172 | | 2-17-1 |

FORM NO. 80-161

(SR 4439)

| CHG LET | REVISION | BY / DATE | CHK / APPD |
|---|---|---|---|
| A | BY REV: ADD PAGE 2.31.1.1& SERIALS TO NOTE 3; ADD EQUIP TABLE; S-1557-1 WAS SOLDER IN WIRE TABLE; ADD 515R TO TITLE (SR4812) | SIPES 5/11/65 | 225 |
| B | BY REV. NOTE 3 PAGE 2.32.1.1 WAS 2.31.1.1 | 5-10-65 | |

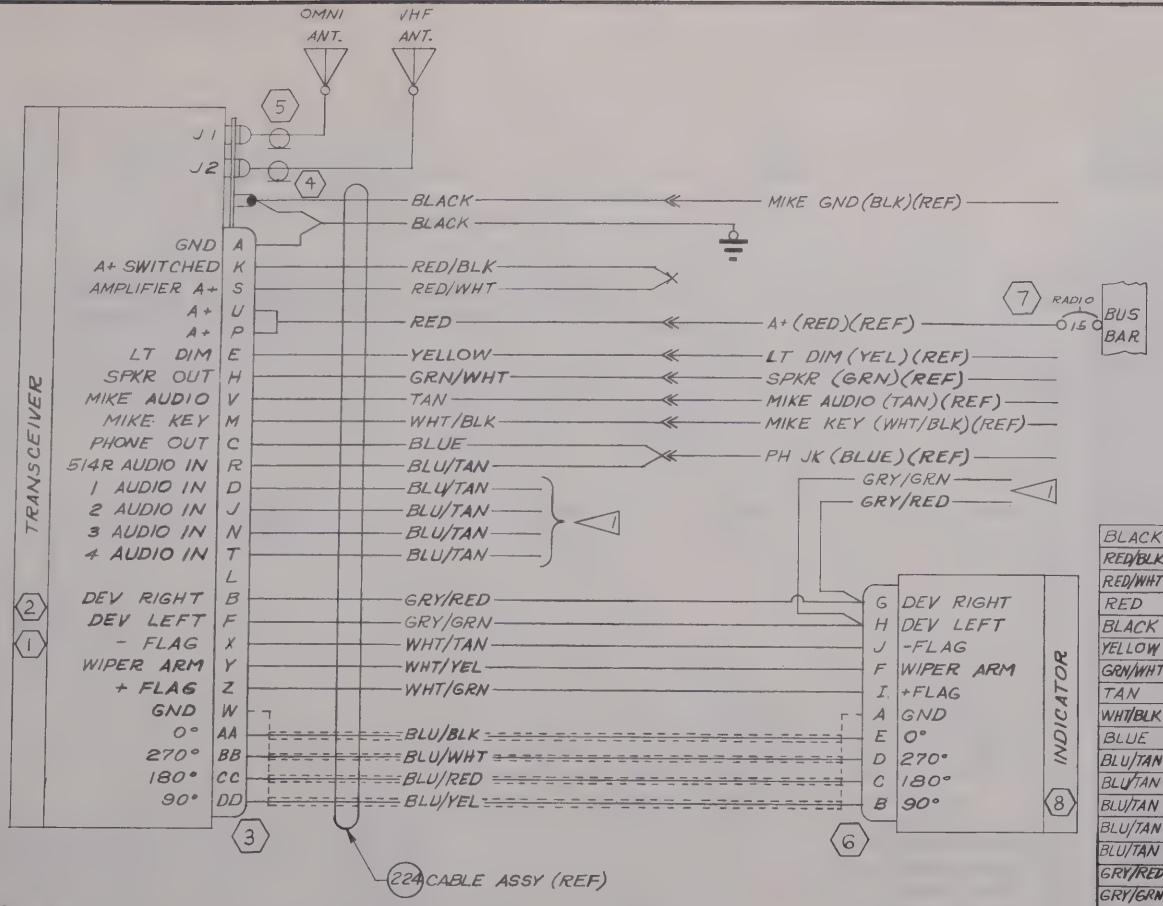


NOTES:

1. WIRES NOT USED SHALL BE CAPPED AND TIED INTO BUNDLE.
2. WIRE MATERIAL PER S-1460 EXCEPT AS NOTED.
3. WIRING SHOWN IS FOR SINGLE UNIT INSTALLATION. FOR MULTIPLE INSTALLATIONS, SEE P. 2.12.1.0 & P. 2.12.1.1. THRU SER 17253392. REFER TO PAGE 2.32.1.1 FOR MULTIPLE INSTL INTERCONNECTIONS SER 17253393 & ON.

| WIRE CODE NO. | GA | MATERIAL | LG | TERMINALS | | SERIALS |
|---|---|---|---|---|---|---|
| BLACK | 16 | -16-0 | | SOLDER | S-1367-2-8 | |
| RED/BLK | 18 | -18-2-0 | | | S-1370-1 | |
| RED/WHT | 18 | -18-2-9 | | | | |
| RED | 16 | -16-2 | | | S-341-1 | |
| BLACK | 22 | -22-0 | | | S-341-2 | |
| YELLOW | 18 | -18-4 | | | | |
| GRN/WHT | 20 | -20-5-9 | | | | |
| TAN | 22 | -22-10 | | | | |
| WHT/BLK | 22 | -22-9-0 | | | | |
| BLUE | 22 | -22-6 | | | S-341-2 | |
| BLU/TAN | 22 | -22-6-10 | | | | |
| BLU/TAN | 22 | | | | S-1557-1 | |
| BLU/TAN | 22 | | | | | |
| BLU/TAN | 22 | | | | | |
| BLU/TAN | 22 | -22-6-10 | | | | |
| GRY/RED | 22 | -22-8-2 | | | | |
| GRY/GRN | 22 | -22-8-5 | | | S-1557-1 | |
| GRY/RED | 22 | -22-8-2 | | | SOLDER | |
| GRY/GRN | 22 | -22-8-5 | | | | |
| WHT/TAN | 22 | -22-9-10 | | | | |
| WHT/YEL | 22 | -22-9-4 | | | | |
| WHT/GRN | 22 | -22-9-5 | | | | |
| BLU/BLK | 22 | S-1461-22-6-0 | | | | |
| BLU/WHT | 22 | S-1461-22-6-9 | | | | |
| BLU/RED | 22 | S-1461-22-6-2 | | | | |
| BLU/YEL | 22 | S-1461-22-6-4 | | SOLDER | SOLDER | |

2 WIRE TABLE

| | | |
|---|---|---|
| 8 | 31640 | INDICATOR (ARC IN-514R) |
| 7 | S-1360-15 | CKT BKR |
| 6 | MS3106A18-1S | PLUG |
| 5 | 29752 | CONNECTOR (ARC) |
| 4 | 29753 | CONNECTOR (ARC) |
| 3 | 29747-0026 | CONNECTOR (ARC) |
| 2 | 34640-1114 | XCVR (ARC RT-515R) |
| 1 | 32580-1114 | XCVR (ARC RT-514R-11) |

CESSNA AIRCRAFT CO. COMMERCIAL AIRCRAFT DIVISION, WICHITA, KANSAS

| | NAME | DATE |
|---|---|---|
| DRAWN | SPRIGGS | 3-31-64 |
| GROUP | PARSONS | 4-5-64 |
| CHECK | | 5-28-64 |
| PROJ | | 6-5-64 |

TITLE: WIRING DIAGRAM — CESSNA NAV-COMM 300R (ARC TYPE 514R & 515R)

Cessna.

OWG NO. 052040

| | | | |
|---|---|---|---|
| A | ADDED CHOKE IN A+ LINE & NOTE 1. ADDED EQUIP TABLE. GND WIRE WAS PIN 11 | SKM | 9-10-65 |

CABLE ASSY SHALL BE SUPPLIED BY VENDOR AS PART OF DUST COVER OR SEPERATELY FOR PARTIAL INSTALLATIONS.

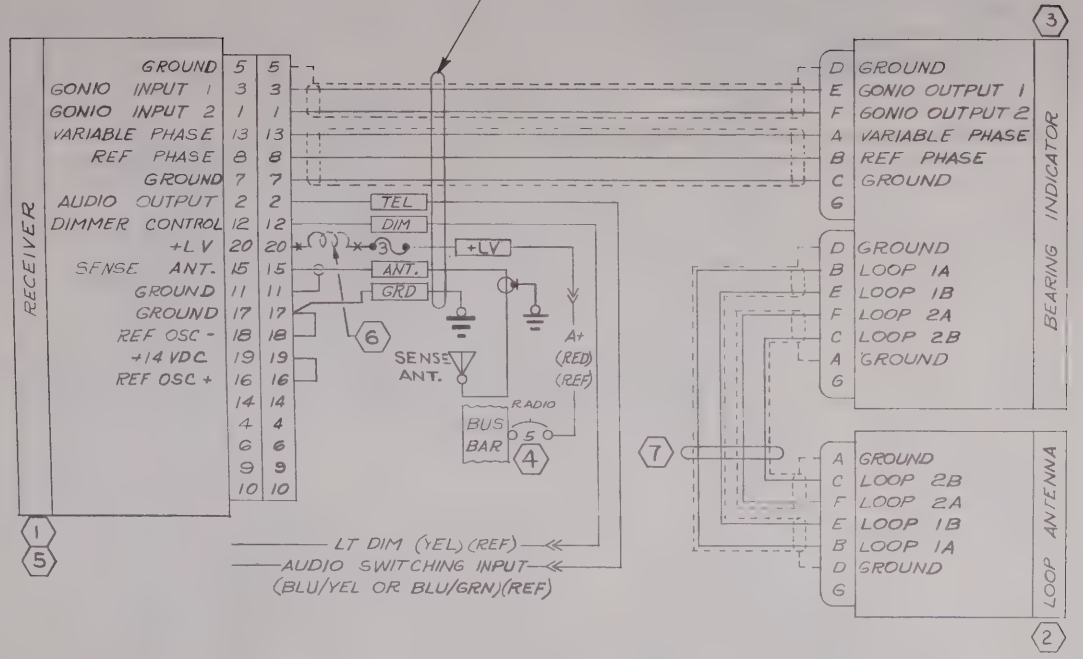


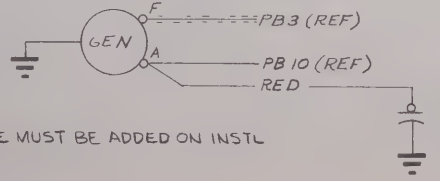


NOTES:
1. CHOKE IN A+ LINE MUST BE ADDED ON INSTL IN ACFT.

| ITEM NO | PART NO | DESCRIPTION | INSTALLED ON |
|---|---|---|---|
| 7 | 33827 | LOOP CABLE (ARC) | |
| 6 | A-263 | CHOKE (CTAT) | |
| 5 | 28340-1400 | RCVR (WITH BFO) | ARC R521A-14 |
| 4 | S-1360-5 | CKT BKR | |
| 3 | 32680-0000 | INDICATOR (ARC IN-521B) | |
| 2 | 32880-0100 | LOOP (ARC -521B-10) | |
| 1 | 26340-1500 | RCVR (LESS BFO) | ARC R521A-15 |

EQUIPMENT TABLE

| WIRE LOOP NO | GA | MATERIAL | LG | TERMINALS | SHIELD TERMINALS | SERIALS |
|---|---|---|---|---|---|---|

WIRE TABLE

CESSNA AIRCRAFT CO., COMMERCIAL AIRCRAFT DIVISION, WICHITA, KANSAS

| | NAME | DATE |
|---|---|---|
| DRAWN | SPRIGGS | 6-22-64 |
| GROUP | PARSONS | 7-8-64 |
| CHECK | | 7-8-64 |
| PROJ | | 7-8-64 |

TITLE: WIRING DIAGRAM — CESSNA ADF 300 (ARC TYPE 521B)

Cessna.

DWG NO 0570400

| SUPERSEDED BY | SUPERSEDES PAGE 2-11 | MDL 172 | REV A | PAGE 2.21 |
|---|---|---|---|---|

FORM NO. 80-161

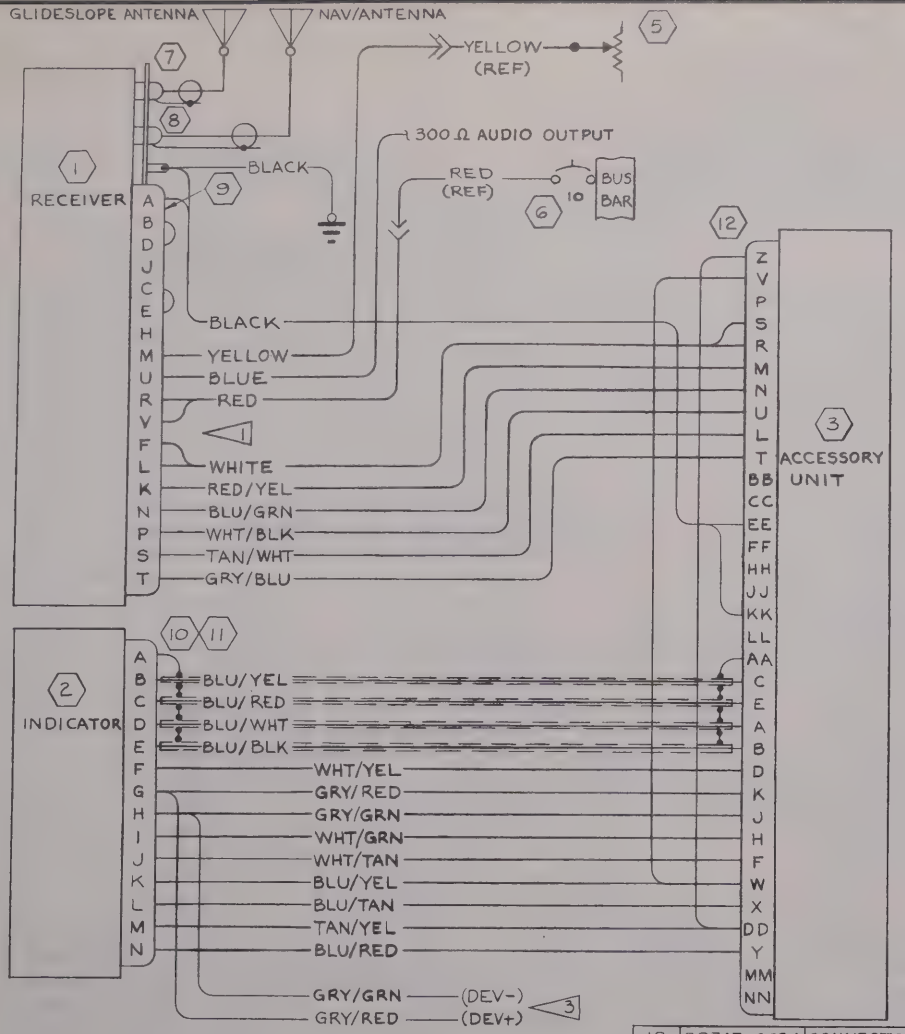


NOTES: (SR466)

1. RED, WHITE & BLACK 16 GA WIRES TO BE HALVED & SOLDERED TO PINS AS SHOWN.
2. WIRE MATERIAL PER S-1460 EXCEPT FOR SHIELDED WIRE.
3. TERMINALS NOT REQD WHEN RADIO IS INSTALLED WITH AN AUTOPILOT.

| CHG LET | REVISION | BY / DATE | CHK / APPD |
|---|---|---|---|
| | | | |

| | | | | | | | |
|---|---|---|---|---|---|---|---|
| BLACK | 16 | -16-0 | | SOLDER | SOLDER | | |
| BLACK | 16 | -16-0 | | S-1367-2-8 | SOLDER | | |
| BLU/WHT | 22-5 | S-1461-22-6-9 | | SOLDER | SOLDER | | |
| BLU/YEL | 22-5 | S-1461-22-6-4 | | | | | |
| BLU/BLK | 22-5 | S-1461-22-6-0 | | | | | |
| BLU/RED | 22-5 | S-1461-22-6-2 | | | | | |
| WHT/BLK | 22 | -22-9-0 | | | | | |
| TAN/WHT | 22 | -22-10-9 | | | | | |
| TAN/YEL | 22 | -22-10-4 | | | | | |
| WHT/TAN | 22 | -22-9-10 | | | | | |
| WHT/GRN | 22 | -22-9-5 | | | | | |
| WHT/YEL | 22 | -22-9-4 | | | SOLDER | | |
| GRY/GRN | 22 | -22-8-5 | | SOLDER | S-1557-1 | | |
| GRY/GRN | 22 | -22-8-5 | | SOLDER | SOLDER | | |
| GRY/RED | 22 | -22-8-2 | | | S-1557-1 | | |
| GRY/RED | 22 | -22-8-2 | | | SOLDER | | |
| GRY/BLU | 22 | -22-8-6 | | | | | |
| BLU/TAN | 22 | -22-6-10 | | | | | |
| BLU/GRN | 22 | -22-6-5 | | | | | |
| BLU/YEL | 22 | -22-6-4 | | | | | |
| BLU/RED | 22 | -22-6-2 | | | | | |
| RED/YEL | 22 | -22-2-4 | | | | | |
| WHITE | 16 | -16-9 | | | SOLDER | | |
| BLUE | 22 | -22-6 | | | | | |
| YELLOW | 18 | -18-4 | | | S-341-2 | | |
| RED | 16 | -16-2 | | SOLDER | S-341-1 | | |
| WIRE CODE NO. | GA | MATERIAL | LG | TERMINALS | | | SERIALS |

2 WIRE TABLE

| | | | |
|---|---|---|---|
| 12 | 29747-0034 | CONNECTOR (ARC) | |
| 11 | MS3057-12A | CLAMP | |
| 10 | MS3106A-20-27S | PLUG | |
| 9 | 29747-0018 | CONNECTOR (ARC) | |
| 8 | 29752 | CONNECTOR (ARC) | |
| 7 | 29753 | CONNECTOR (ARC) | |
| 6 | 5-1360-10 | CIRCUIT BREAKER | |
| 5 | 0413126-5 | RHEOSTAT | |
| 4 | | | |
| 3 | 32980-0014 | ACCESSORY UNIT (ARC RA-525A-1) | |
| 2 | 32350 | INDICATOR (ARC IN-525) | |
| 1 | 31380-1000 | RCVR (ARC R-525A-10) | |
| | PART NO. | DESCRIPTION | INSTALLED ON |

CESSNA AIRCRAFT CO., COMMERCIAL AIRCRAFT DIVISION, WICHITA, KANSAS

| | NAME | DATE |
|---|---|---|
| DRAWN | RIDDER | 4-16-65 |
| GROUP | | |
| CHECK | | 5-7-65 |
| PROJ | | |

TITLE: WIRING DIAGRAM — CESSNA NAV/OMNI 300 (ARC TYPE 525A)

Cessna.

DWG NO 0570400

NOTES:
1. ITEMS 6, 7, & 8 ARE SUPPLIED AS PART OF KN-60 INSTL KIT NO. 050-1052-00.

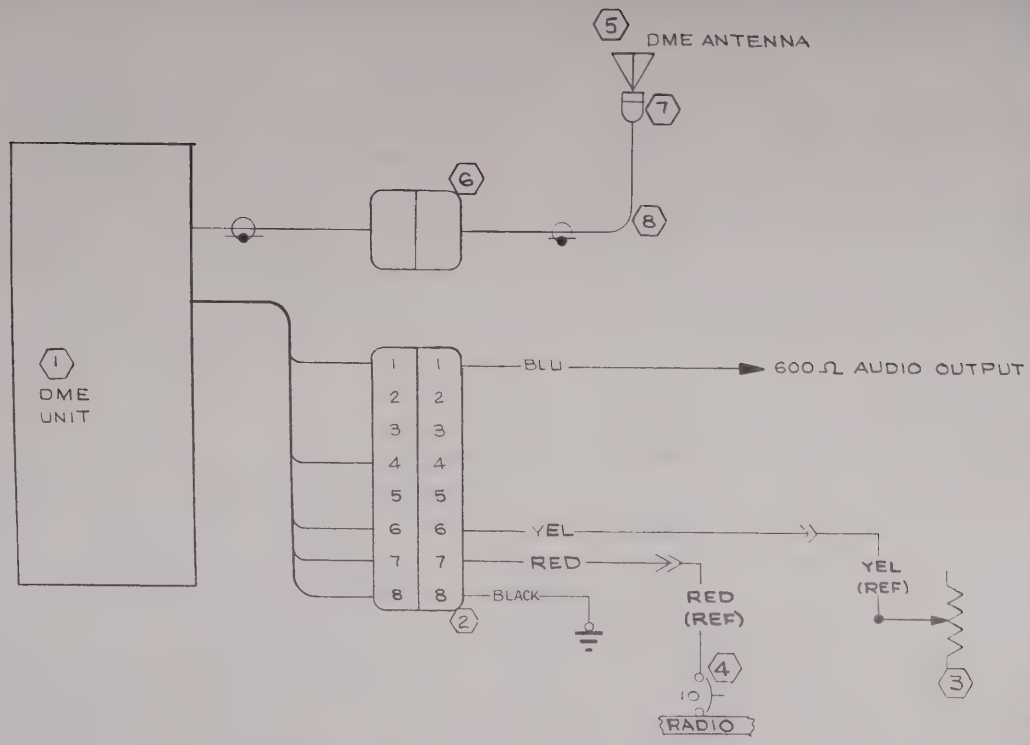


| WIRE CODE NO | GA | MATERIAL | LG | TERMINALS | | | SERIALS |
|---|---|---|---|---|---|---|---|
| BLU | 22 | -22-6 | | SOLDER | | | |
| RED | 16 | -16-2 | | | | S-341-1 | |
| YEL | 8 | -18-4 | | | | S-341-2 | |
| BLACK | 6 | -16-3 | | SOLDER | | S-1367-28 | |

WIRE TABLE

| ITEM NO | PART NO | DESCRIPTION | INSTALLED ON |
|---|---|---|---|
| 8 | 024-0001-00 | R.F. CABLE (KG) | |
| 7 | 030-24-00 | CONNECTOR RT ANGLE (KG) | |
| 6 | 030-0021-01 | CONNECTOR (KG) | |
| 5 | KA-15 | ANTENNA (KG) | |
| 4 | S-1360-10 | CIRCUIT BKR | |
| 3 | 043126-5 | RHEOSTAT | |
| 2 | 030-2043-00 | CONNECTOR (KG) | |
| 1 | KN-60 | DME UNIT (KG) | |

EQUIPMENT TABLE

CESSNA AIRCRAFT CO., COMMERCIAL AIRCRAFT DIVISION, WICHITA, KANSAS

| | NAME | DATE |
|---|---|---|
| DRAWN | BREEN | 8-30-64 |
| GROUP | PARSONS | 11-24-64 |
| CHECK | R. Stucke | 11-25-64 |
| PROJ | J. Wise | 11-2-64 |
| | [illegible] | 11-[illegible]-64 |

TITLE: WIRING DIAGRAM — KING KN-60 DME

Cessna.

DWG NO 0570400

| SUPERSEDED BY | SUPERSEDES | MODEL | REV | PAGE |
|---|---|---|---|---|
| | | 172 | | 2.24.1 |

(SR4762)

| CHG LET | REVISION | BY DATE | CHK APPD |
|---|---|---|---|
| | | | |

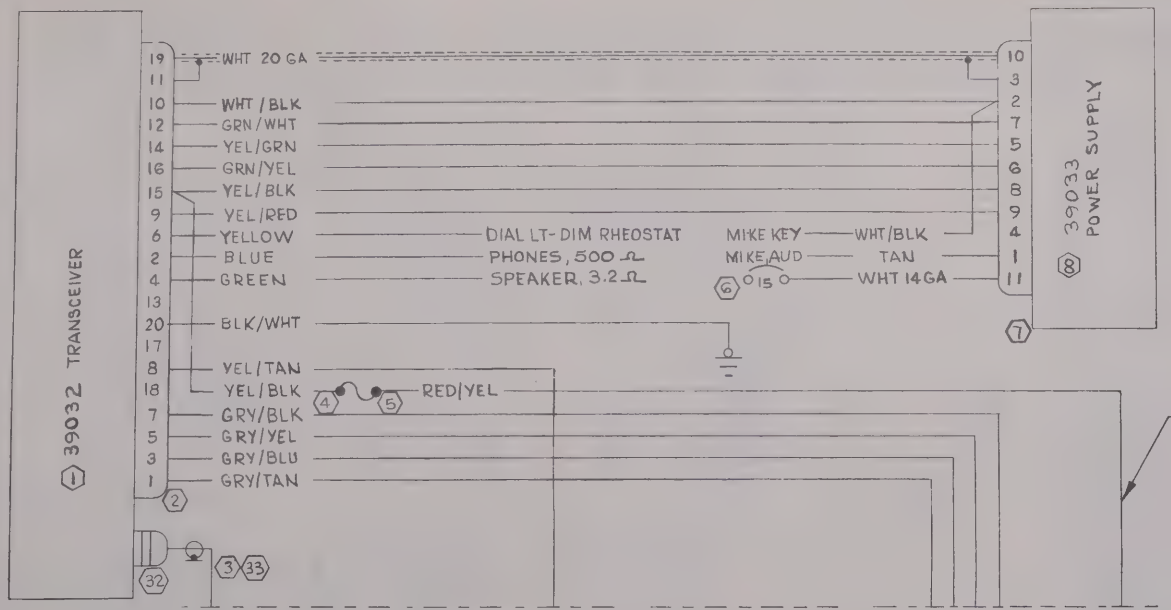


4 5 & ASSOCIATED WIRES NOT USED WHEN TRAILING WIRE ANTENNA IS PART OF PANTRONICS DX10-DA INSTALLATION.

| WIRE CODE NO. | GA | MATERIAL | LG | TERMINALS | | SERIALS |
|---|---|---|---|---|---|---|
| | | | | | | |

WIRE TABLE

CESSNA AIRCRAFT CO. COMMERCIAL AIRCRAFT DIVISION, WICHITA, KANSAS

| | NAME | DATE |
|---|---|---|
| DRAWN | W COOK | 4-3-65 |
| GROUP | Y Wire | 4-6-65 |
| CHECK | R. Stuck | 4-7-65 |
| PROJ | 345 & 7 & 2261 | |

TITLE: WIRING DIAGRAM — PANTRONICS DX10-DA

Cessna.

DWG NO 0570400

| PART NO | DESCRIPTION | INSTALLED ON |
|---|---|---|
| | | |

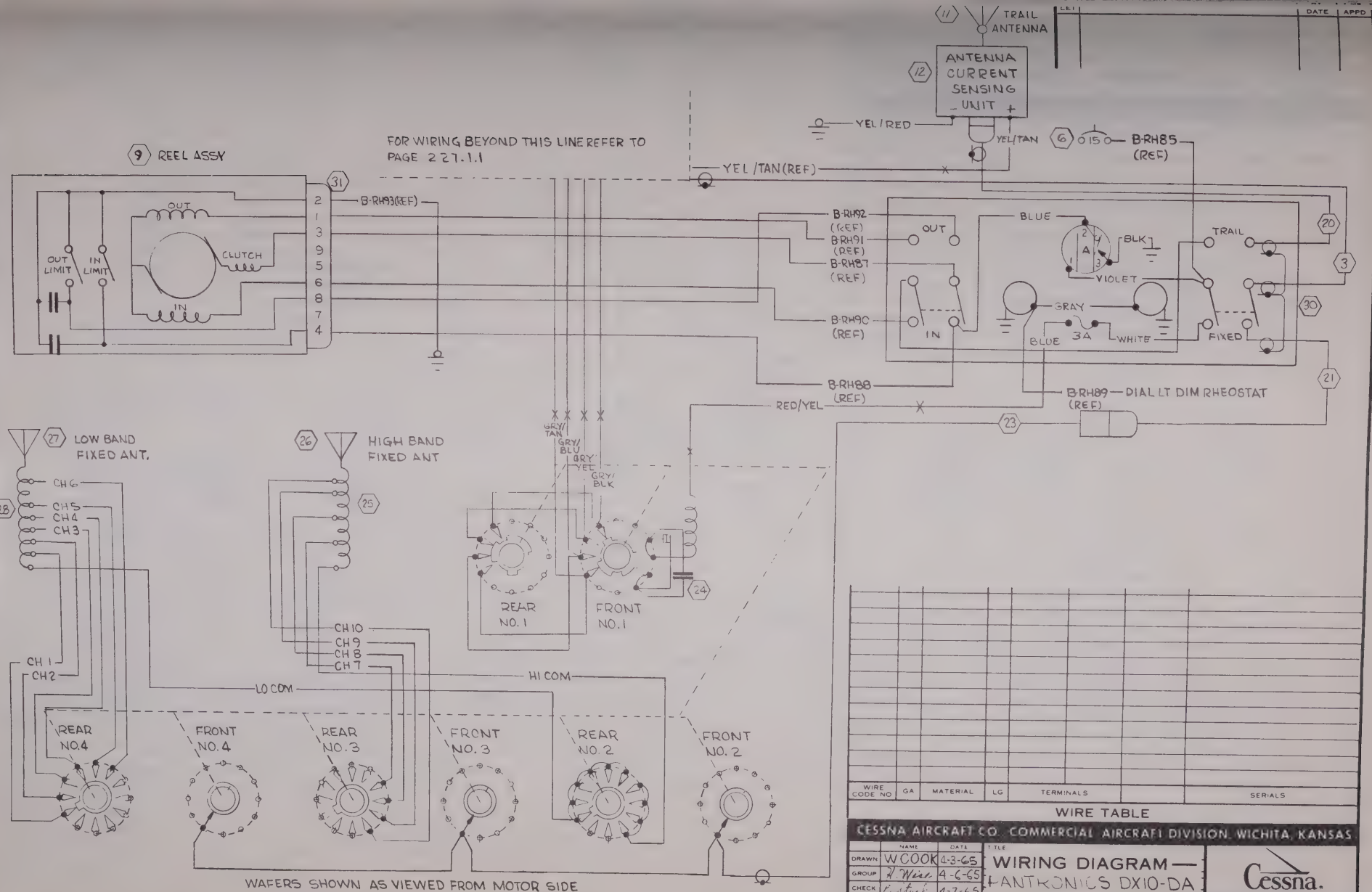

TRAIL ANTENNA
ANTENNA CURRENT SENSING UNIT
YEL/RED
YEL/TAN
B-RH85 (REF)
FOR WIRING BEYOND THIS LINE REFER TO PAGE 2.27.1.1
REEL ASSY
YEL/TAN (REF)
B-RH93 (REF)
OUT
CLUTCH
IN
OUT LIMIT
IN LIMIT
B-RH92 (REF)
B-RH91 (REF)
B-RH87 (REF)
B-RH90 (REF)
B-RH88 (REF)
OUT
IN
BLUE
BLK
VIOLET
GRAY
3A
WHITE
TRAIL
FIXED
B-RH89 (REF) — DIAL LT DIM RHEOSTAT
RED/YEL
LOW BAND FIXED ANT.
HIGH BAND FIXED ANT
CH 6
CH 5
CH 4
CH 3
CH 1
CH 2
CH 10
CH 9
CH 8
CH 7
GRY/TAN
GRY/BLU
GRY/YEL
GRY/BLK
REAR NO. 1
FRONT NO. 1
LO COM
HI COM
REAR NO. 4
FRONT NO. 4
REAR NO. 3
FRONT NO. 3
REAR NO. 2
FRONT NO. 2
WAFERS SHOWN AS VIEWED FROM MOTOR SIDE
SWITCH (SHOWN IN CHANNEL 1 POS)
ITEM NO
PART NO.
DESCRIPTION
INSTALLED ON
EQUIPMENT TABLE
WIRE CODE NO
GA
MATERIAL
LG
TERMINALS
SERIALS
WIRE TABLE
CESSNA AIRCRAFT CO. COMMERCIAL AIRCRAFT DIVISION, WICHITA, KANSAS
NAME
DATE
DRAWN W COOK 4-3-65
GROUP 4-6-65
CHECK 4-7-65
PROJ
TITLE
WIRING DIAGRAM — PANTRONICS DX10-DA
Cessna.
DWG NO. 0570400
SUPERSEDED BY
SUPERSEDES
MODEL 172
REV A
PAGE 2.27.1.2

(SR4762)

| CHG LET | REVISION | BY DATE | CHK APPD |
|---|---|---|---|
| | | | |

FOR WIRING ABOVE THIS LINE REFER TO PAGE 2.27.1.1

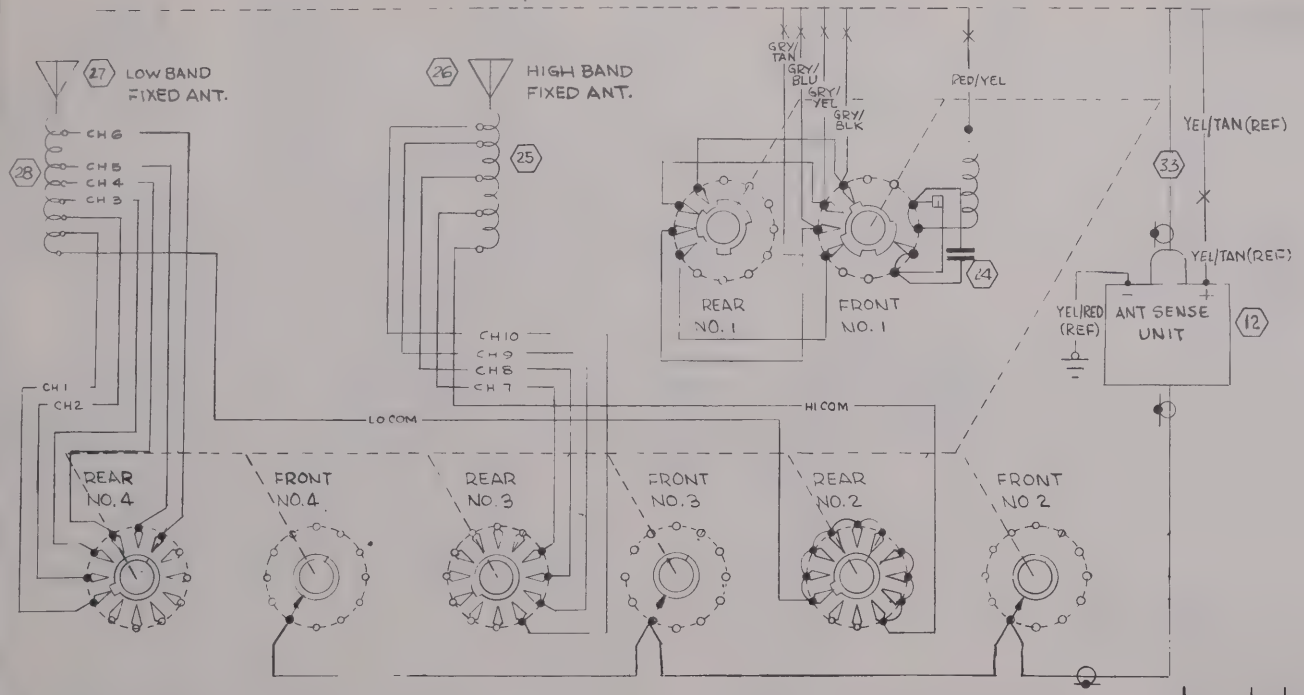


29 SWITCH
(SHOWN IN CHANNEL 1 POS)
(WAFER SHOWN AS VIEWED FROM MOTOR SIDE)

| WIRE CODE NO. | GA | MATERIAL | LG | TERMINALS | | SERIALS |
|---|---|---|---|---|---|---|
| | | | | | | |

WIRE TABLE

| PART NO | DESCRIPTION | INSTALLED ON |
|---|---|---|
| | | |

CESSNA AIRCRAFT CO. COMMERCIAL AIRCRAFT DIVISION WICHITA, KANSAS

| | NAME | DATE |
|---|---|---|
| DRAWN | WCOOK | 4-3-65 |
| GROUP | [illegible] | 4-6-65 |
| CHECK | [illegible] | 4-7-65 |
| PROJ | [illegible] | 4-27-65 |

TITLE
WIRING DIAGRAM — PANTRONICS DX10-DA

Cessna.

DWG NO
0570400

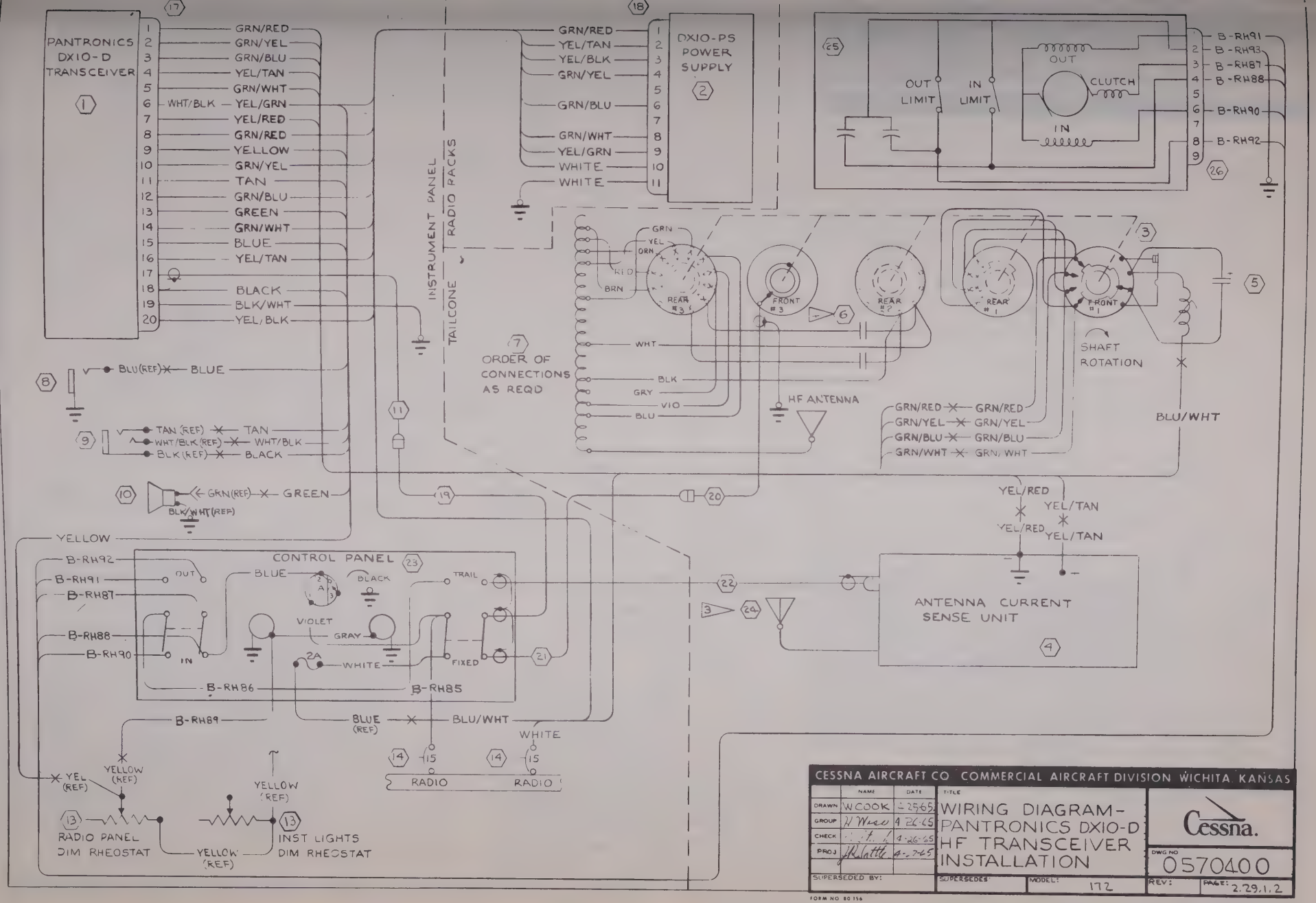


CESSNA AIRCRAFT CO COMMERCIAL AIRCRAFT DIVISION WICHITA, KANSAS

| | NAME | DATE |
|---|---|---|
| DRAWN | W COOK | 2-25-65 |
| GROUP | H Wren | 4-26-65 |
| CHECK | [illegible] | 4-26-65 |
| PROJ | [illegible] | 4-26-65 |

SUPERSEDED BY:

TITLE: WIRING DIAGRAM - PANTRONICS DX10-D HF TRANSCEIVER INSTALLATION

Cessna.

DWG NO 0570400

SUPERSEDES: MODEL: 172 REV: PAGE: 2.29.1.2

FORM NO 80156

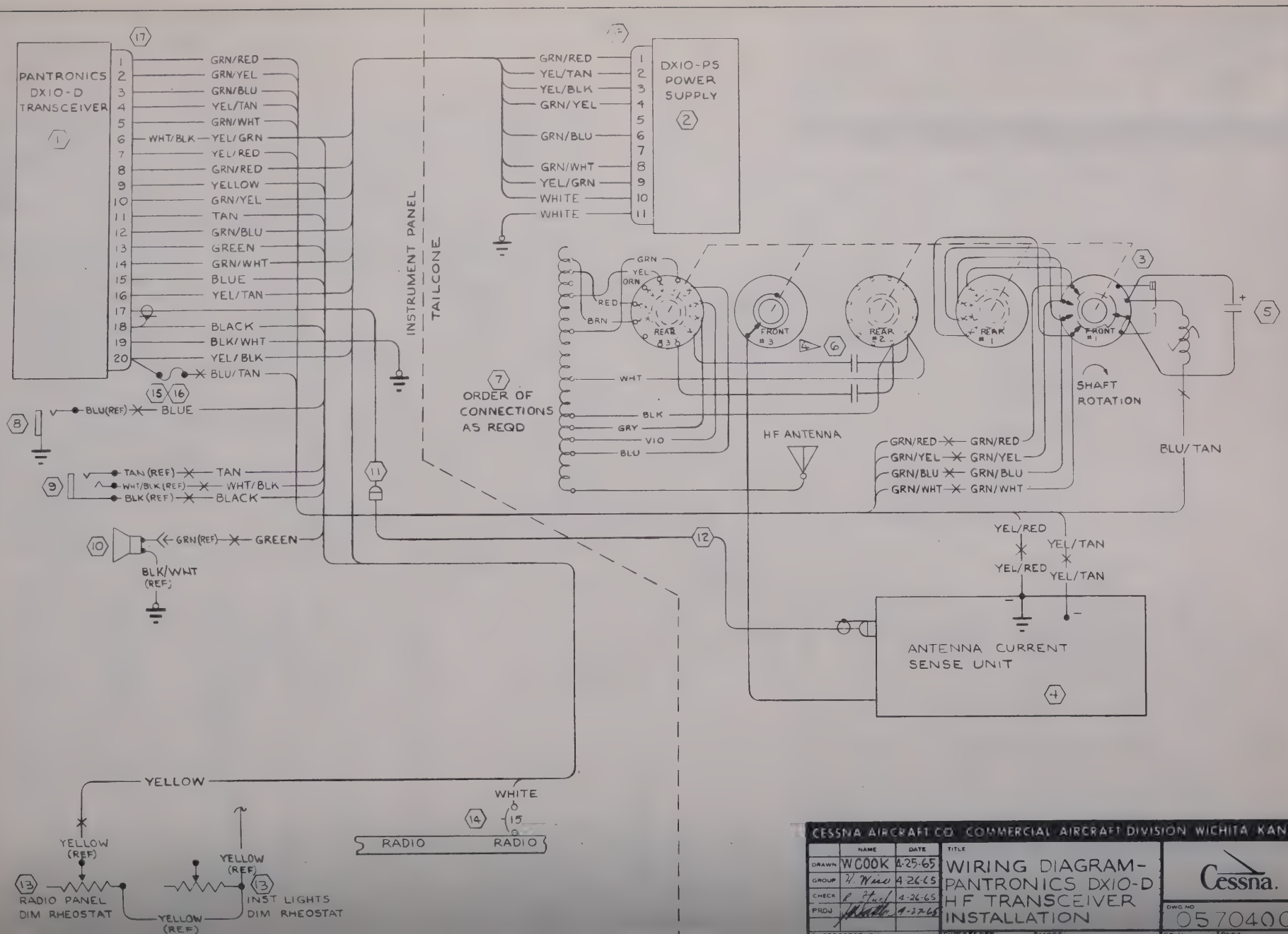


CESSNA AIRCRAFT CO. COMMERCIAL AIRCRAFT DIVISION WICHITA KANSAS

| | NAME | DATE |
|---|---|---|
| DRAWN | W COOK | 4-25-65 |
| GROUP | | 4-26-65 |
| CHECK | | 4-26-65 |
| PROJ | | 4-27-65 |

TITLE: WIRING DIAGRAM-PANTRONICS DX10-D HF TRANSCEIVER INSTALLATION

Cessna.

DWG NO 0570400

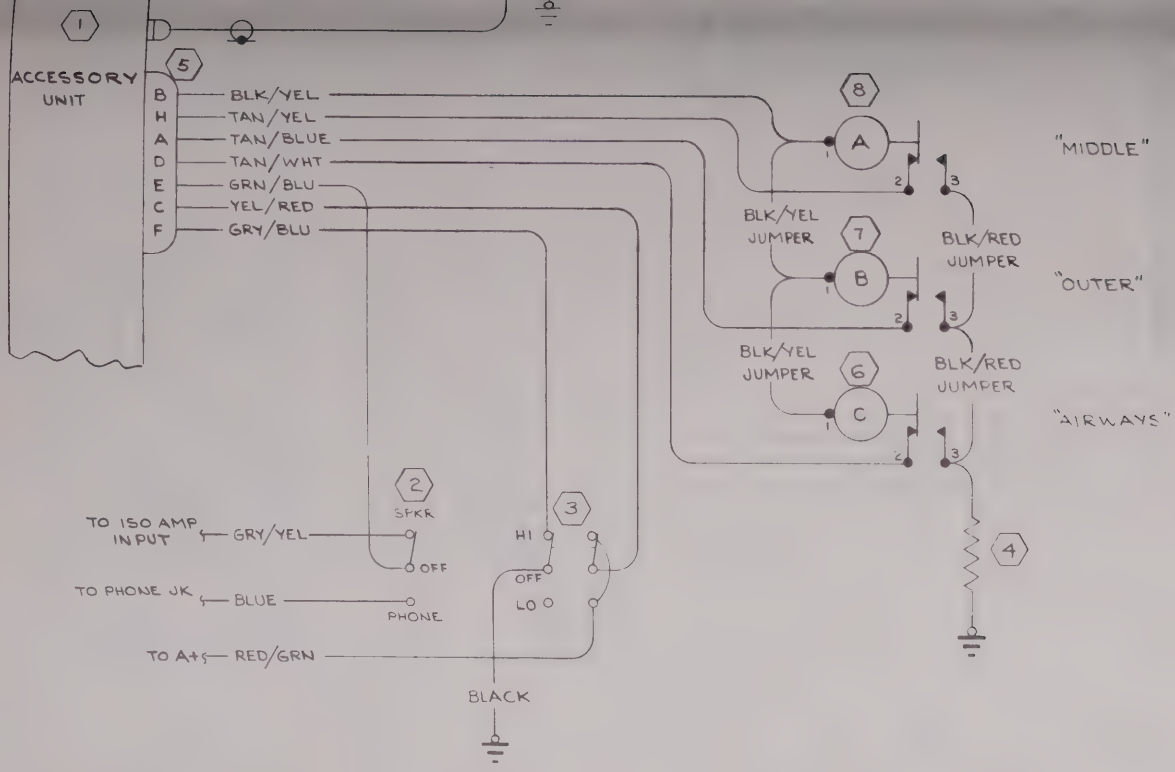


NOTES:

1. WIRE MATERIAL PER S-1460.

| WIRE CODE NO | GA | MATERIAL | LG | TERMINALS | | | SERIALS |
|---|---|---|---|---|---|---|---|
| BLUE | 22 | -22-6 | | S-1367-1-6 | | | |
| BLACK | 22 | -22-0 | | S-1367-1-6 | S-1367-1-8 | | |
| RED GRN | 20 | -20-2-5 | | S-1367-1-6 | | | |
| GRY YEL | 22 | -22-8-4 | | S-1367-1-6 | | | |
| GRY BLU | 22 | -22-8-6 | | SOLDER | S-1367-1-6 | | |
| YEL RED | 20 | -20-4-2 | | ↑ | S-1367-1-6 | | |
| GRN BLU | 20 | -20-5-6 | | | S-1367-1-6 | | |
| TAN WHT | 22 | -22-10-9 | | | SOLDER | | |
| TAN BLU | 22 | -22-10-6 | | | ↑ | | |
| TAN YEL | 22 | -22-10-4 | | ↓ | ↓ | | |
| BLK YEL | 22 | -22-0-4 | | SOLDER | SOLDER | | |

1 WIRE TABLE

| ITEM NO | PART NO. | DESCRIPTION | INSTALLED ON |
|---|---|---|---|
| 8 | MS25041-4-328 | LIGHT ASSY | |
| 7 | MS25041-10-328 | LIGHT ASSY | |
| 6 | MS25041-1-328 | LIGHT ASSY | |
| 5 | 28371-0007 | CONNECTOR | (ARC |
| 4 | 40-2,3 WATT | RESISTOR (OM) | |
| 3 | S-392-1 | SWITCH | |
| 2 | S-382-1 | SWITCH | |
| 1 | 32980-0014 | ACCESSORY UNIT (ARC TYPE RA-525A-1) | |

EQUIPMENT TABLE

CESSNA AIRCRAFT CO. COMMERCIAL AIRCRAFT DIVISION WICHITA KANSAS

| | NAME | DATE |
|---|---|---|
| DRAWN | | 4-13-65 |
| GROUP | [illegible] | [illegible] |
| CHECK | [illegible] | 5-7-65 |
| PROJ | [illegible] | [illegible] |

TITLE: WIRING DIAGRAM— MARKER BEACON CESSNA NAV/OMNI 300 (ARC TYPE 525A)

Cessna.

DWG NO: 0570400

SUPERSEDED BY | SUPERSEDES. | MODEL: 172 | REV: | PAGE: 2.30.1

FORM NO 80 161A

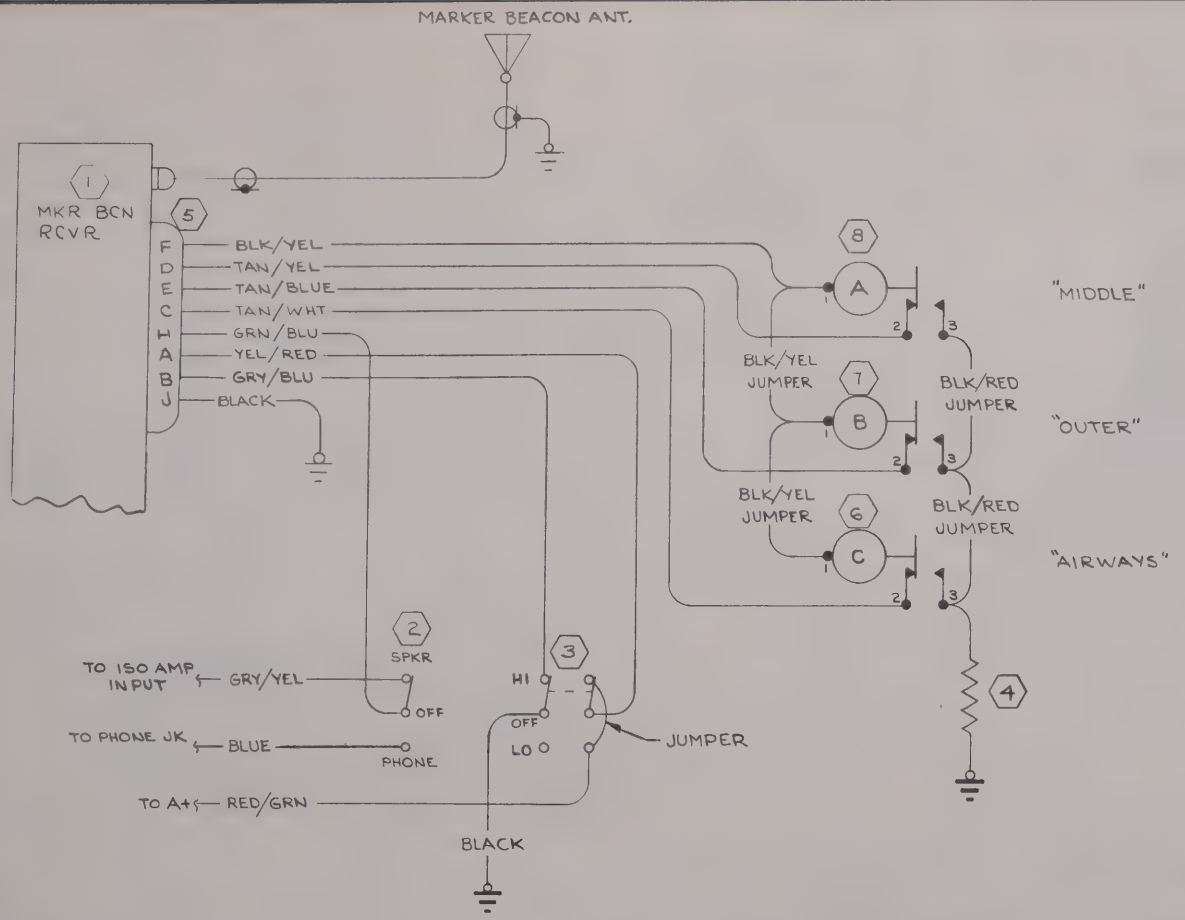


| CHG LET | REVISION | BY DATE | CHK APPD |
|---|---|---|---|
| | | | |

NOTES:
1. WIRE MATERIAL PER S-1460.

| | | | | | | | |
|---|---|---|---|---|---|---|---|
| BLACK | 22 | -22-0 | | SOLDER | S-1367-1-8 | | |
| BLUE | 22 | -22-6 | | S-1367-1-6 | | | |
| BLACK | 22 | -22-0 | | S-1367-1-6 | S-1367-1-8 | | |
| RED GRN | 20 | -20-2-5 | | S-1367-1-6 | | | |
| GRY YEL | 22 | -22-8-4 | | S-1367-1-6 | | | |
| GRY BLU | 22 | -22-8-6 | | SOLDER | S-1367-1-6 | | |
| YEL RED | 20 | -20-4-2 | | ↑ | S-1367-1-6 | | |
| GRN/BLU | 20 | -20-5-6 | | ↑ | S-1367-1-6 | | |
| TAN/WHT | 22 | -22-10-9 | | ↑ | SOLDER | | |
| TAN/BLU | 22 | -22-10-6 | | ↑ | ↑ | | |
| TAN/YEL | 22 | -22-10-4 | | ↑ | ↑ | | |
| BLK YEL | 22 | -22-0-4 | | SOLDER | SOLDER | | |
| WIRE CODE NO. | GA | MATERIAL | LG | TERMINALS | | | SERIALS |

1 WIRE TABLE

CESSNA AIRCRAFT CO. COMMERCIAL AIRCRAFT DIVISION WICHITA KANSAS

| | | | |
|---|---|---|---|
| 8 | MS25041-4-328 | LIGHT ASSY | |
| 7 | MS25041-10-328 | LIGHT ASSY | |
| 6 | MS25041-1-328 | LIGHT ASSY | |
| 5 | 28371-0009 | CONNECTOR | (ARC) |

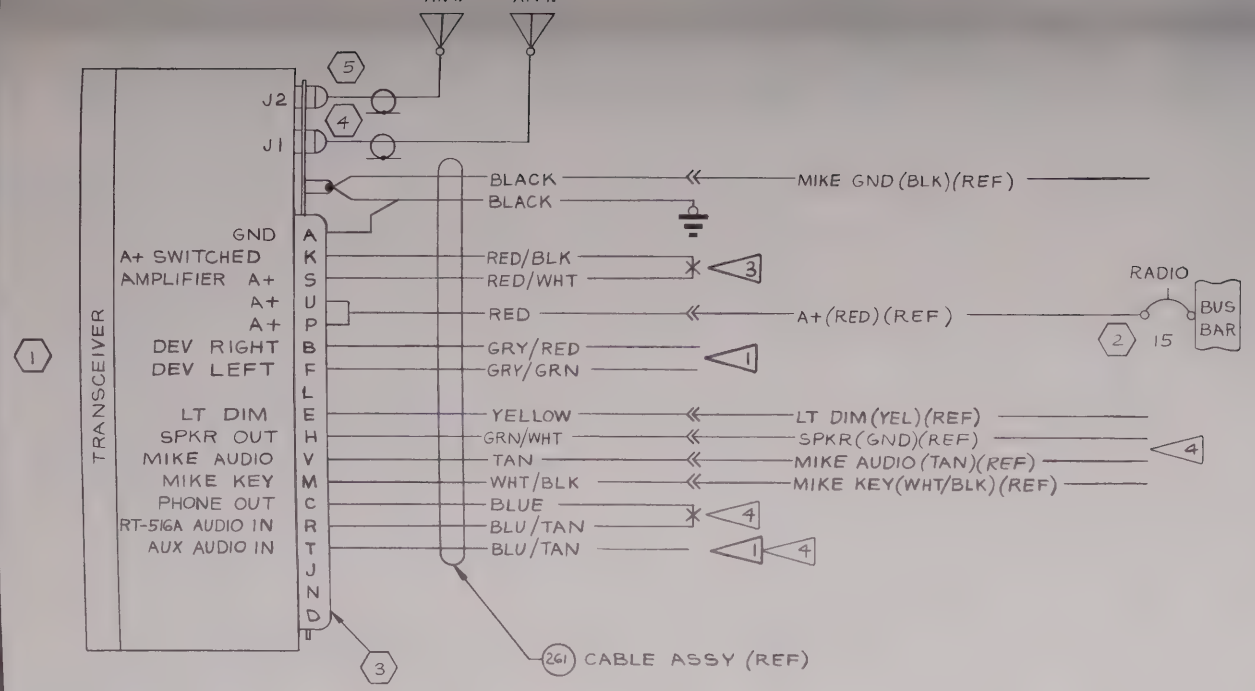


NOTES:

1. WIRES NOT USED SHALL BE CAPPED AND TIED INTO A BUNDLE
2. WIRE MATERIAL PER S-1460
3. WHEN THIS SET IS INSTALLED AS A SINGLE RADIO, CONNECT PINS "S" & "K" TOGETHER AS SHOWN. WHEN INSTALLED IN CONJUNCTION WITH ANOTHER RADIO SET SUCH AS AN ADF OR A NAV-OMNI, CONNECT PIN "S" TO A SEPARATE S-1360-5 "AUD AMP" CKT BKR.
4. REFER TO PAGE 2.32.1.0 FOR TRANSMITTER AND AUDIO SWITCHING CIRCUITS WHEN THIS RADIO IS COMBINED WITH OTHER RADIOS.

| WIRE CODE NO. | GA | MATERIAL | LG | TERMINALS | | SERIALS |
|---|---|---|---|---|---|---|
| BLU/TAN | 22 | -22-6-10 | | SOLDER | S-1557-1 | |
| BLU/TAN | 22 | -22-6-10 | | | S-1370-1 | |
| BLUE | 22 | -22-6 | | | | |
| WHT/BLK | 22 | -22-9-0 | | | S-341-2 | |
| TAN | 22 | -22-10 | | | | |
| GRN/WHT | 20 | -20-5-9 | | | | |
| YELLOW | 18 | -18-4 | | | S-341-2 | |
| GRY/GRN | 22 | -22-8-5 | | | S-1557-1 | |
| GRY/RED | 22 | -22-8-2 | | | S-1557-1 | |
| RED | 16 | -16-2 | | | S-341-1 | |
| RED/BLK | 18 | -18-2-0 | | | S-1370-1 | |
| RED/WHT | 18 | -18-2-9 | | | | |
| BLACK | 16 | -16-0 | | | S-1367-1-10 | |
| BLACK | 22 | -22-0 | | SOLDER | S-341-2 | |

2 WIRE TABLE

| ITEM NO | PART NO. | DESCRIPTION | INSTALLED ON |
|---|---|---|---|
| 5 | 29753 | CONNECTOR (ARC) | |
| 4 | 29752 | CONNECTOR (ARC) | |
| 3 | 29747-0018 | CONNECTOR (ARC) | |
| 2 | S-1360-15 | CKT BKR | |
| 1 | 34710-1014 | XCVR (ARC TYPE RT-516A) | |

EQUIPMENT TABLE

CESSNA AIRCRAFT CO., COMMERCIAL AIRCRAFT DIVISION, WICHITA, KANSAS

| | NAME | DATE |
|---|---|---|
| DRAWN | D. SIPES | 7/26/65 |
| GROUP | | |
| CHECK | | |
| PROJ | | |

TITLE: WIRING DIAGRAM— CESSNA NAV-COMM 300 (ARC TYPE 516A)

Cessna

DWG NO: 570400

SUPERSEDED BY:

SUPERSEDES: 2.2 1.0

MODEL: 172

REV: A

PAGE: 2.31.1

NOTES;

1. RECEIVER PHONE OUTPUT CONNECTIONS TO NO 1, 2, 3 OR 4 SPKR-PHONE SWITCH IS DETERMINED BY THE MOUNTING POSITION OF THE RADIO SET IN THE INSTRUMENT PANEL.
2. THE BLU/TAN ISOLATION AMPLIFIER INPUTS FROM THE XCVR ARE IDENTICAL. PINS "R", "D", J, "N" & "T" MAY BE CONNECTED TO ANY BLU/TAN WIRE FROM A SPKR-PHONE SWITCH.
3. NAV/COMM 300 (TYPE 516A) XCVRS CONTAIN ONLY (2) ISO. AMP INPUTS PINS "D", "J" & "N" ARE OPEN CIRCUITS.
4. ALL WIRES ARE REFERENCE EXCEPT WIRES CONNECTING TO 0570400-707
5. WIRE MATERIAL PER S-1460

| CHG LET | REVISION | BY DATE | CHK APPD |
|---|---|---|---|
| | | | |

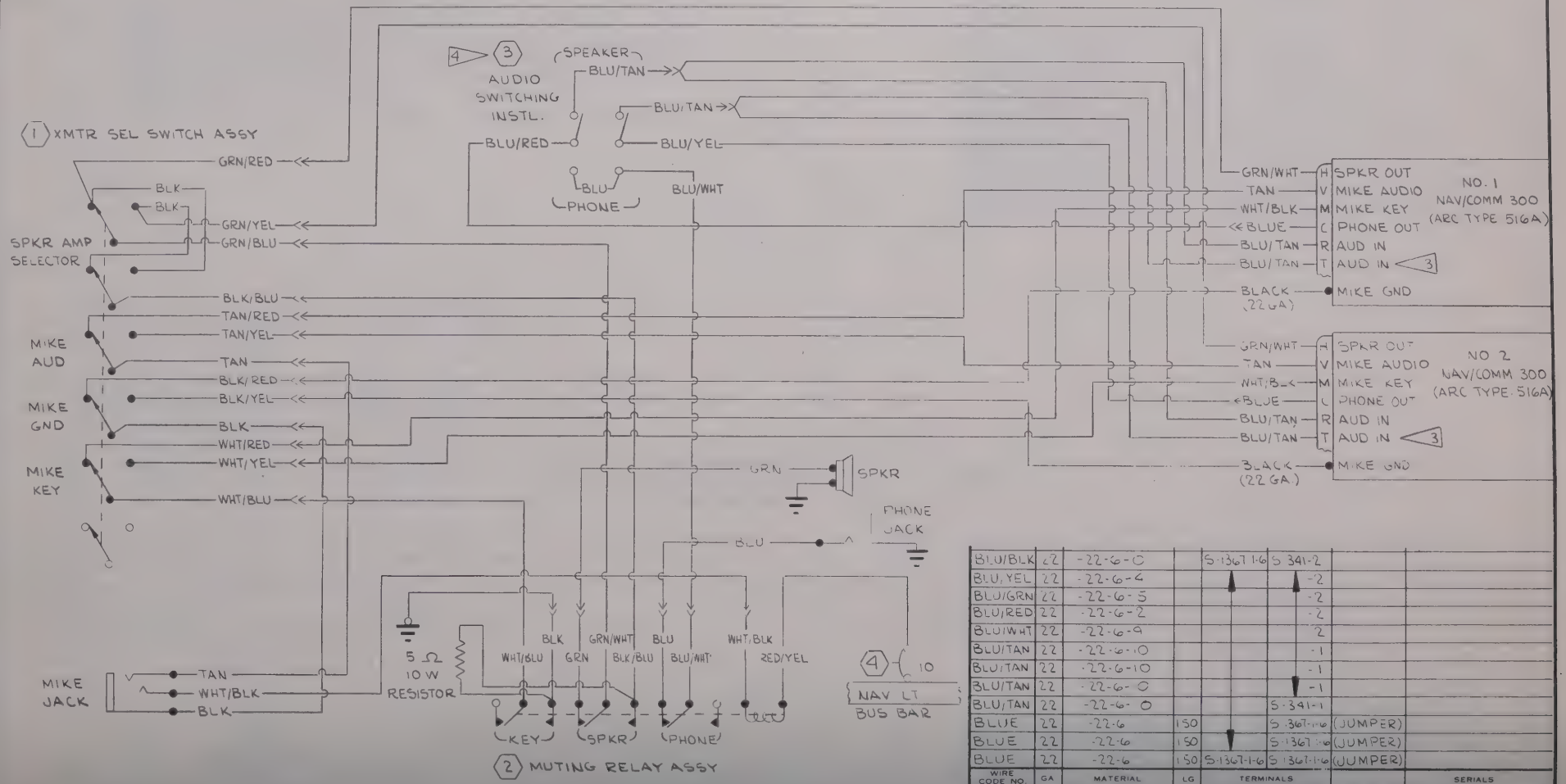


| WIRE CODE NO. | GA | MATERIAL | LG | TERMINALS | | | SERIALS |
|---|---|---|---|---|---|---|---|
| BLU/BLK | 22 | -22-6-0 | | S-1367-1-6 | S-341-2 | | |
| BLU/YEL | 22 | -22-6-4 | | | -2 | | |
| BLU/GRN | 22 | -22-6-5 | | | -2 | | |
| BLU/RED | 22 | -22-6-2 | | | -2 | | |
| BLU/WHT | 22 | -22-6-9 | | | -2 | | |
| BLU/TAN | 22 | -22-6-10 | | | -1 | | |
| BLU/TAN | 22 | -22-6-10 | | | -1 | | |
| BLU/TAN | 22 | -22-6-0 | | | -1 | | |
| BLU/TAN | 22 | -22-6-0 | | | S-341-1 | | |
| BLUE | 22 | -22-6 | 150 | | S-367-1-6 | (JUMPER) | |
| BLUE | 22 | -22-6 | 150 | | S-1367-1-6 | (JUMPER) | |
| BLUE | 22 | -22-6 | 150 | S-1367-1-6 | S-1367-1-6 | (JUMPER) | |

(5) WIRE TABLE

CESSNA AIRCRAFT CO., COMMERCIAL AIRCRAFT DIVISION, WICHITA, KANSAS

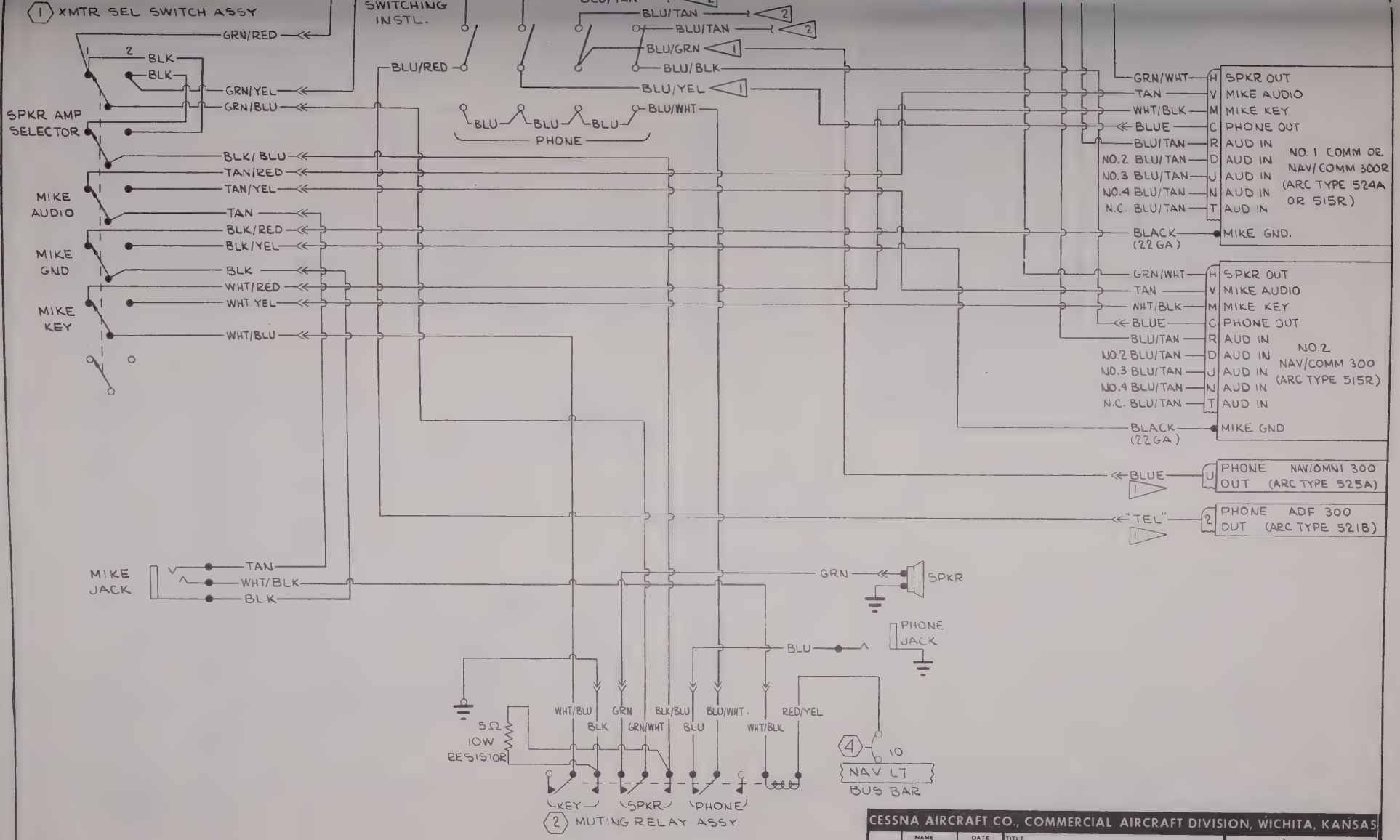


CESSNA AIRCRAFT CO., COMMERCIAL AIRCRAFT DIVISION, WICHITA, KANSAS

| | NAME | DATE |
|---|---|---|
| DRAWN | BLISS | 5-17-65 |
| GROUP | T. Wire | 6-23-65 |
| CHECK | STOCK | 6-24-65 |
| PROJ | [illegible] | 6-25-65 |

TITLE: WIRING DIAGRAM— TYPICAL INTERCONNECT OF COMBINATION OF CESSNA 300 SERIES RADIOS

Cessna®

DWG NO: 0570400

| SUPERSEDED BY: | SUPERSEDES: | MODEL: 172 | REV: | PAGE: 2.32.1.1 |
|---|---|---|---|---|

FORM NO 80 161A

| CHG LET | REVISION | BY / DATE | CHK / APPD |
|---|---|---|---|
| | | | |

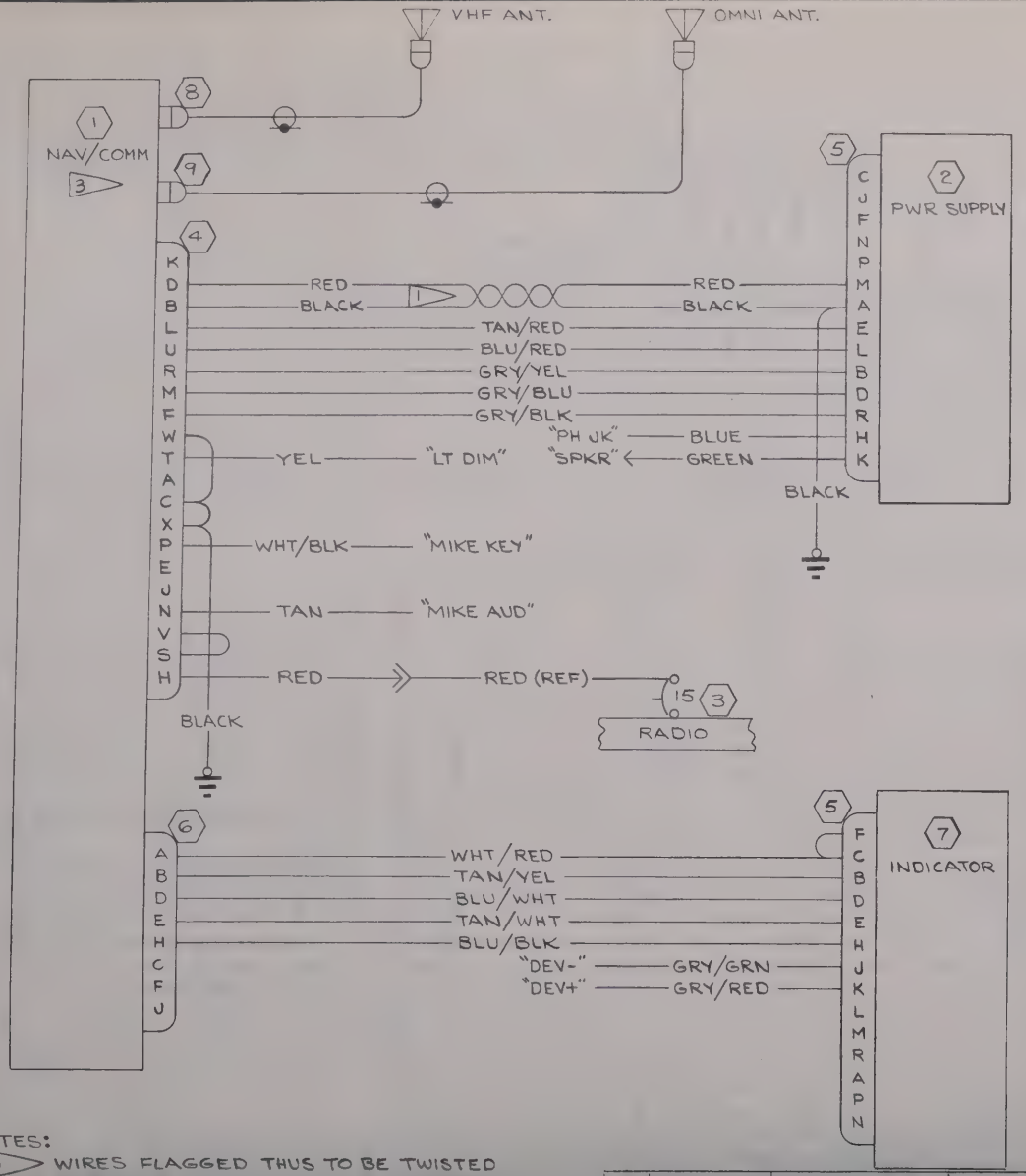


NOTES:

1. WIRES FLAGGED THUS TO BE TWISTED TOGETHER TO FORM A TWISTED PAIR.
2. WIRE MATERIAL PER S-1460.
3. THE KX-160E PANEL UNIT INCLUDES A 14 PIN CONNECTOR FOR DME CHANNELING THAT IS NOT SHOWN ON THIS DIAGRAM.

| | | | |
|---|---|---|---|
| 9 | 030-0028-00 | CONNECTOR (KG | |
| 8 | 030-0005-00 | CONNECTOR (KG) | |
| 7 | KI-201 | INDICATOR (KG) | |
| 6 | 030-2044-00 | CONNECTOR (KG) | |
| 5 | 030-2000-00 | CONNECTOR (KG) | |
| 4 | 030-2003-00 | CONNECTOR (KG) | |

| WIRE CODE NO. | GA | MATERIAL | LG | TERMINALS | | | SERIALS |
|---|---|---|---|---|---|---|---|
| GRY/RED | 22 | -22-8-2 | | SOLDER | S-1557-1 | | |
| GRY/GRN | 22 | -22-8-5 | | | S-1557-1 | | |
| BLU/BLK | 22 | -22-6-0 | | | SOLDER | | |
| TAN/WHT | 22 | -22-10-9 | | | | | |
| BLU/WHT | 22 | -22-6-9 | | | | | |
| TAN/YEL | 22 | -22-10-4 | | | | | |
| WHT/RED | 22 | -22-9-2 | | | SOLDER | | |
| BLACK | 22 | -22-0 | | | S-1367-1-8 | | |
| RED | 16 | -16-2 | | | S-341-1 | | |
| TAN | 22 | -22-10 | | | | | |
| WHT/BLK | 22 | -22-9-0 | | | | | |
| YELLOW | 18 | -18-4 | | | | | |
| BLACK | 22 | -22-0 | | | S-1367-1-8 | | |
| GREEN | 20 | -20-5 | | | S-341-2 | | |
| BLUE | 22 | -22-6 | | | | | |
| GRY/BLK | 22 | -22-8-0 | | | SOLDER | | |
| GRY/BLU | 22 | -22-8-6 | | | | | |
| GRY/YEL | 22 | -22-8-4 | | | | | |
| BLU/RED | 22 | -22-6-2 | | | | | |
| TAN/RED | 22 | -22-10-2 | | | | | |
| BLACK | 16 | -16-0 | | | | | |
| RED | 16 | -16-2 | | SOLDER | SOLDER | | |

2 WIRE TABLE

CESSNA AIRCRAFT CO., COMMERCIAL AIRCRAFT DIVISION, WICHITA, KANSAS

| NAME | DATE | TITLE |
|---|---|---|

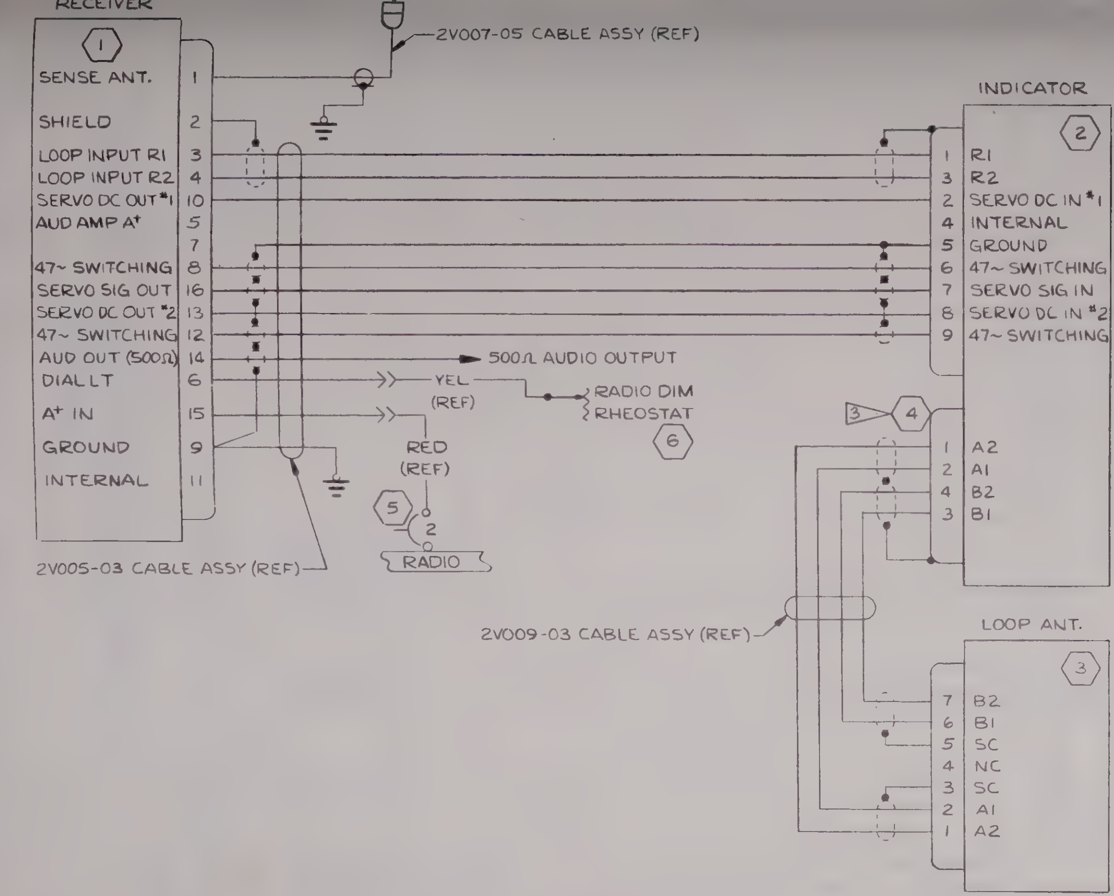


NOTES:

1. CONNECTIONS SHOWN ARE FOR TOP MOUNTED SENSE & BOTTOM MOUNTED LOOP ANTENNA.
2. ALL WIRES ARE VENDOR FURNISHED WITH INSTL KIT

3. (4) IS SUPPLIED LOOSE BY VENDOR & IS TO BE ATTACHED TO LOOP ANT. CABLE AS SHOWN. FLAGS ON WIRES INDICATE PIN NOS. ON LOOP ANT. END OF CABLE.

| ITEM NO | PART NO. | DESCRIPTION | INSTALLED ON |
|---|---|---|---|
| 6 | 0413126-5 | RHEOSTAT | |
| 5 | S-1360-2 | CIRCUIT BREAKER | |
| 4 (3) | WK-4-21C-5/16 | PLUG (CED) | |
| 3 | 2321E | LOOP ANT. (BX) | |
| 2 | 551A | INDICATOR (BX) | |
| 1 | 201D | RCVR (BX) | |

EQUIPMENT TABLE

| WIRE CODE NO. | GA | MATERIAL | LG | TERMINALS | | SERIALS |
|---|---|---|---|---|---|---|
| | | | | | | |

WIRE TABLE

CESSNA AIRCRAFT CO., COMMERCIAL AIRCRAFT DIVISION, WICHITA, KANSAS

| | NAME | DATE |
|---|---|---|
| DRAWN | HOLFORD | 7-20-65 |
| GROUP | [illegible] | 8-24-65 |
| CHECK | [illegible] | 8-24-65 |
| PROJ | [illegible] | [illegible] |

TITLE: WIRING DIAGRAM— BENDIX ADF-T-12C

Cessna

DWG NO 0570400

SUPERSEDED BY | SUPERSEDES | MODEL: 172 | REV | PAGE 2.34

(SR4938)

| CHG LET | REVISION | BY DATE | CHK APPD |
|---|---|---|---|
| | | | |

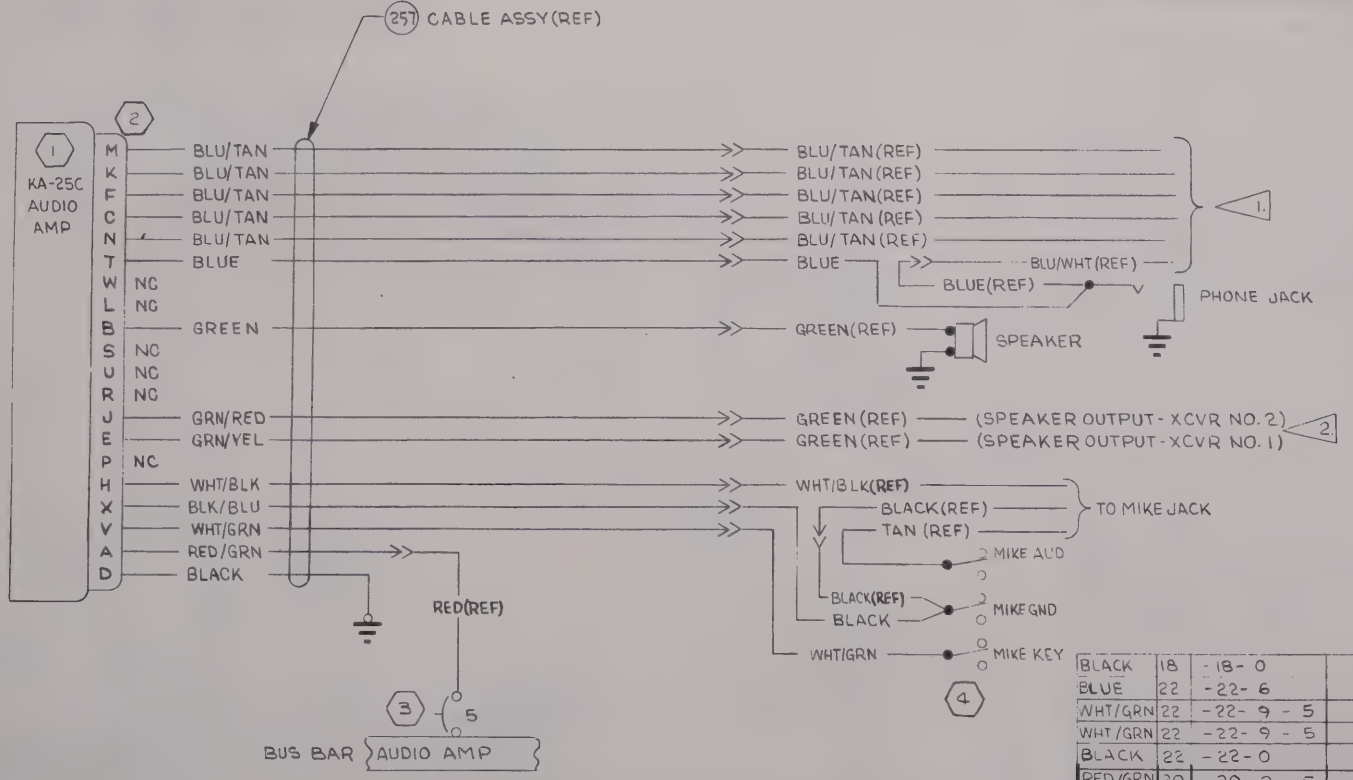


NOTES:

1. THESE WIRES TO AUDIO SWITCHING, REFER TO PAGE 2.32.1 FOR SCHEMATIC AND REQUIREMENTS. UNUSED BLU/TAN WIRES TO BE CAPPED WITH S-1557-1 TERMINALS.
2. THESE CIRCUITS PROVIDE 4 Ω, 5 WATT DUMMY SPEAKER LOADS WHEN REQUIRED.
3. WIRE MATERIAL PER S-1460.

| WIRE CODE NO. | GA | MATERIAL | LG | TERMINALS | | SERIALS |
|---|---|---|---|---|---|---|
| BLACK | 18 | -18-0 | | S-1367-1-10 | SOLDER | |
| BLUE | 22 | -22-6 | | S-341-2 | | |
| WHT/GRN | 22 | -22-9-5 | | | | |
| WHT/GRN | 22 | -22-9-5 | | | | |
| BLACK | 22 | -22-0 | | | | |
| RED/GRN | 20 | -20-2-5 | | | | |
| BLU/TAN | 22 | -22-6-10 | | | | |
| BLU/TAN | 22 | -22-6-10 | | | | |
| BLU/TAN | 22 | -22-6-10 | | | | |
| BLU/TAN | 22 | -22-6-10 | | | | |
| BLU/TAN | 22 | -22-6-10 | | | | |
| BLUE | 22 | -22-6 | | | | |
| GREEN | 20 | -20-5 | | | | |
| GRN/RED | 20 | -20-5-2 | | | | |
| GRN/YEL | 20 | -20-5-4 | | | | |
| WHT/BLK | 22 | -22-9-0 | | | | |
| BLK/BLU | 22 | -22-0-6 | | S-341-2 | SOLDER | |

3. WIRE TABLE

CESSNA AIRCRAFT CO., COMMERCIAL AIRCRAFT DIVISION, WICHITA, KANSAS

# TABLE OF CONTENTS


| NO. | TITLE | DATE ISSUED | REV |
|---|---|---|---|
| | **1963 THRU 1964 SERIALS**<br>**18051184 THRU 18051445**<br>**185-0513 THRU 185-0776** | | |
| | Speaker, Phone Jack, Mike Jack, Light Rheo, & Power Circuit | 11-2-62 | |
| | Transmitter and Audio Selector Switches | 11-2-62 | |
| | Nav-O-Matic 200 & 300 Systems | 5-27-63 | Inac. |
| | Cessna VHF Nav/Com 300 Radio System | 11-2-62 | A |
| | King KX-150 Director | 12-4-63 | |
| | Audio Isolation Amplifier KA-10 | 1-4-63 | |
| | King KY-90 | 1-4-63 | |
| | King KX-100 & KX-120 | 1-4-63 | |
| | Motorola ADF-T12B | 1-4-63 | |
| 10 | Sunair Radio T-5DA & T-10D | 11-7-63 | |
| 10.1 | Sunair Radio T-5DA & T-10D | 11-7-63 | |
| 11 | Cessna ADF 300 (ARC Type 521A) | 12-4-63 | A |
| 13 | ARC 302-24 - 24-Volt | 6-11-63 | |
| 14 | ARC 318A- 24 Volt | 6-11-63 | |
| 17 | ARC 319A - 24 Volt | 6-19-63 | |
| 19 | Narco Mark XII With VOA-4, VOA-5 or VOA-6 | 10-23-63 | |
| 20 | Cessna Nav/Com 300 (ARC Type 514A) | 11-13-63 | |

(SR 4012)

| CHG LET | REVISION | BY DATE | CHK APPD |
|---|---|---|---|
| | | | |

NOTES:

1. WIRES SHALL BE OF SUFFICIENT LENGTH TO ALLOW CONNECTION WITH ALL POSSIBLE RADIO COMBINATIONS.
2. WIRES SHALL BE LABELED AS SHOWN. NUMERICAL CODING IS OPTIONAL.
3. TERMINALS SHALL BE ATTACHED TO WIRES AS REQUIRED BY EACH RADIO INSTALLATION.

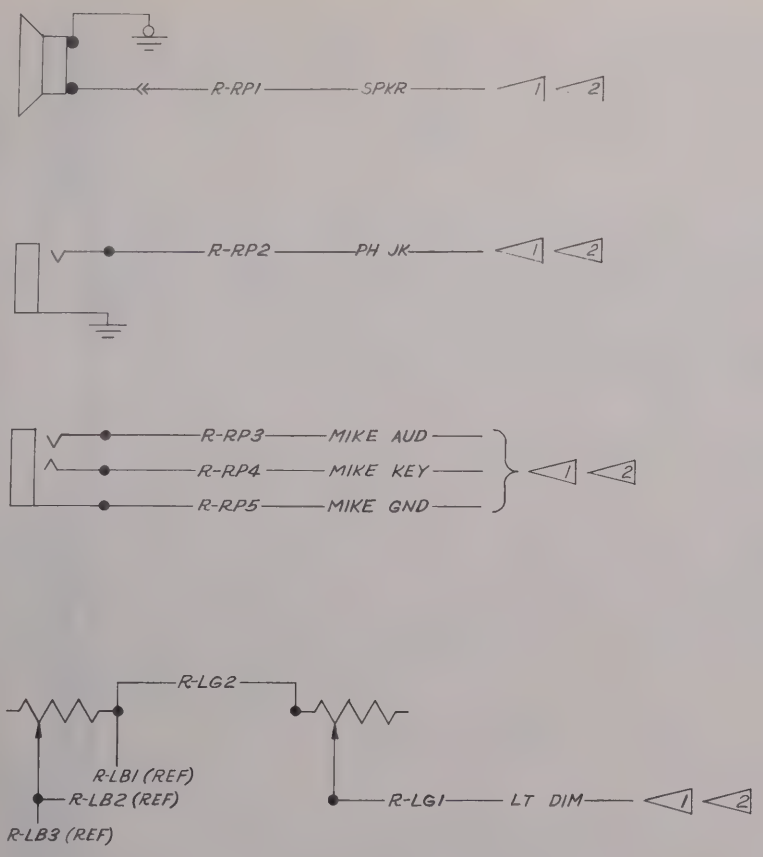


| WIRE CODE NO. | GA | MATERIAL | LG | TERMINALS | | | SERIALS |
|---|---|---|---|---|---|---|---|
| R-RD1 | 16 | | | S-1367-2-8 | 3 | | OPTIONAL |
| R-LG2 | 18 | | | SOLDER | SOLDER | | |
| 2 R-LG1 | 18 | | | | 3 | | |
| R-RP5 | 20 | | | | | | |
| R-RP4 | 20 | | | | | | |
| R-RP3 | 20 | | | | | | |
| R-RP2 | 20 | | | SOLDER | | | OPTIONAL |
| 2 R-RP1 | 20 | | | S-341-2 | 3 | | STANDARD |

WIRE TABLE

CESSNA AIRCRAFT CO. COMMERCIAL AIRCRAFT DIVISION, WICHITA, KANSAS

| | NAME | DATE |
|---|---|---|
| DRAWN | SPRIGGS | 10-4-62 |
| GROUP | W. Tennant | 10-31-62 |

TITLE: WIRING DIAGRAM —

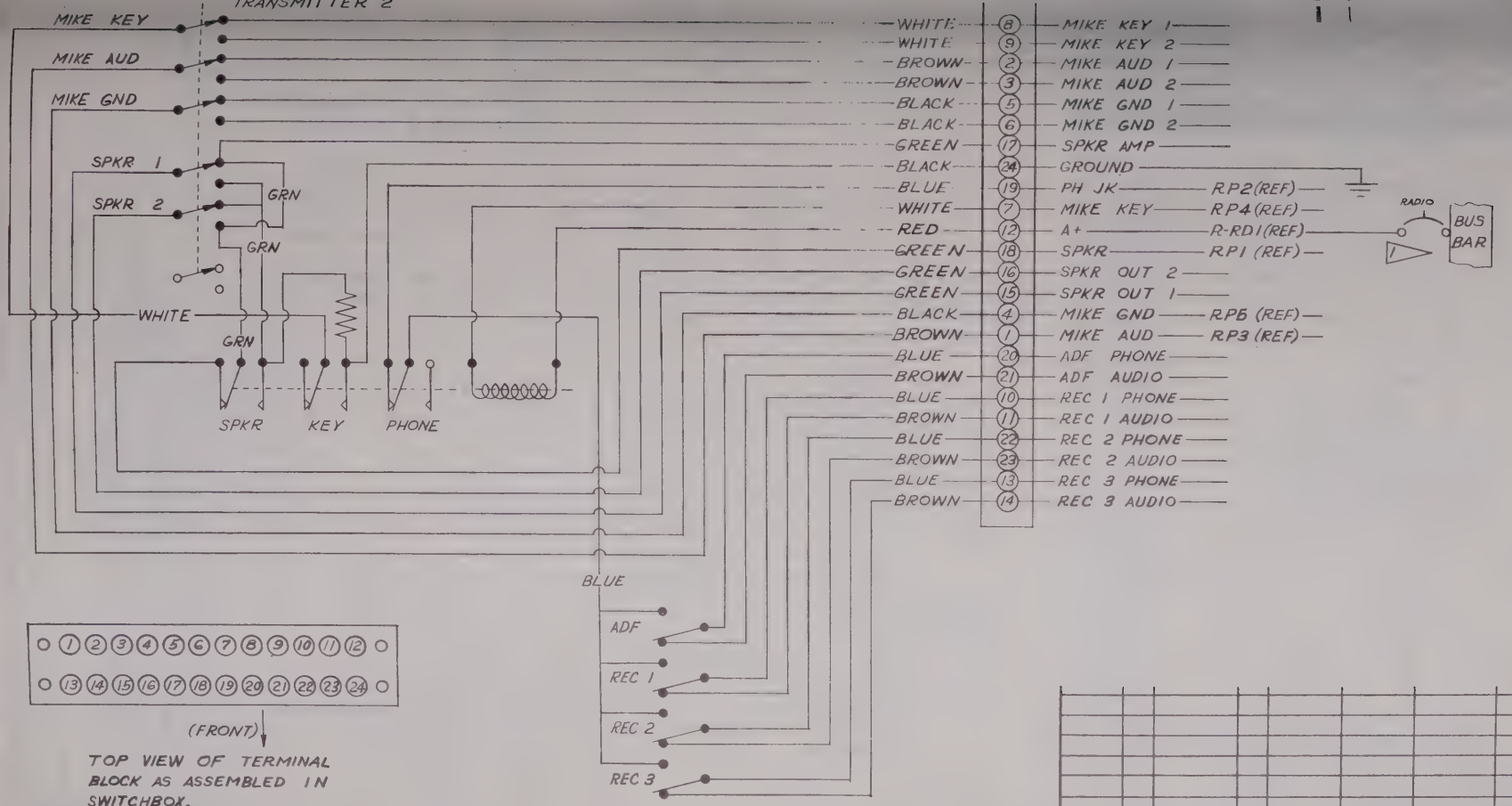


TOP VIEW OF TERMINAL BLOCK AS ASSEMBLED IN SWITCHBOX.

NOTES:

1. CONNECT R-RD2 TO SMALLEST RADIO CIRCUIT BREAKER IN USE.
2. SWITCHBOX SCHEMATIC SAME AS 1270625 PAGE 17.12 AND IS SHOWN HERE FOR REFERENCE PURPOSES ONLY.

| WIRE CODE NO. | GA | MATERIAL | LG | TERMINALS | | SERIALS |
|---|---|---|---|---|---|---|
| | | | | | | |

WIRE TABLE

| ITEM NO | PART NO. | DESCRIPTION | INSTALLED ON |
|---|---|---|---|
| | | | |

EQUIPMENT TABLE

CESSNA AIRCRAFT CO. COMMERCIAL AIRCRAFT DIVISION, WICHITA, KANSAS

| | NAME | DATE |
|---|---|---|
| DRAWN | SPRIGGS | 10-15-62 |
| GROUP | V Jeanne | 10-31-62 |
| CHECK | L. Yuck | 10-30-62 |
| PROJ | R Sattler | 10-30-62 |

TITLE: WIRING DIAGRAM — TRANSMITTER AND AUDIO SELECTOR SWITCHES

Cessna.

DWG NO. 0700092

| SUPERSEDED BY | SUPERSEDES | MODEL: 180, 185 | REV: | PAGE: 17.2 |
|---|---|---|---|---|
| | | | | |

FORM NO. 80-161

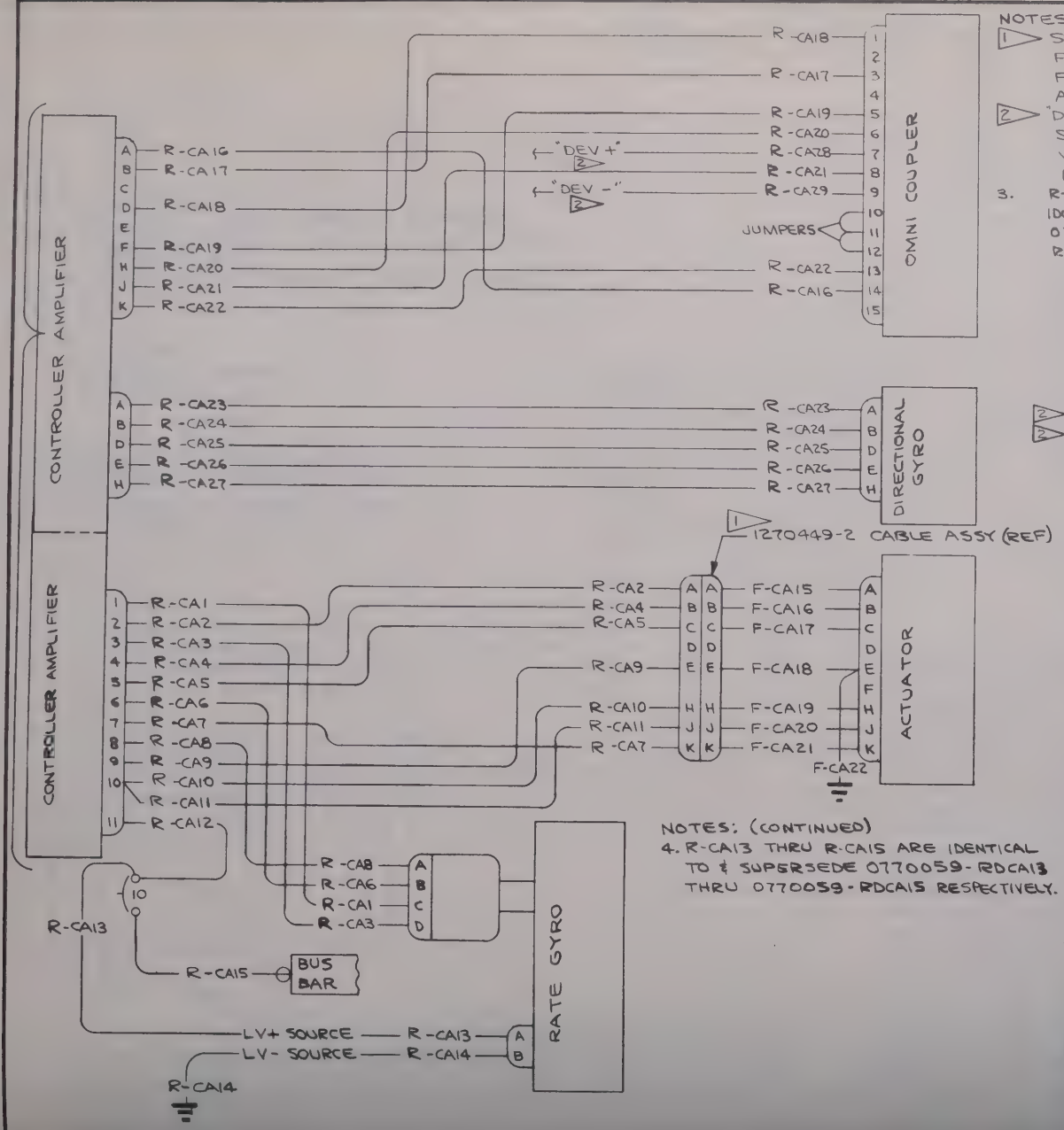


NOTES: (SR 3966)

1. SEE 1270405 PAGE 17.7 FOR WIRE REQUIREMENTS FOR 1270449-2 CABLE ASSY.
2. "DEV +" & "DEV -" TO BE STAMPED ON THESE WIRES AS SHOWN. NUMERICAL CODE IS OPT.
3. R-CA1 THRU R-CA12 ARE IDENTICAL TO & SUPERSEDE 0770058-RD-CA1 THRU RD-CA12 RESPECTIVELY.

NOTES: (CONTINUED)

4. R-CA13 THRU R-CA15 ARE IDENTICAL TO & SUPERSEDE 0770059-RDCA13 THRU 0770059-RDCA15 RESPECTIVELY.

| CHG LET | REVISION | BY / DATE | CHK / APPD |
|---|---|---|---|
| | | | |

INACTIVE
SERIAL (SR 4240) & OH
5-6-63
H.L.W.
BE
RRS

| WIRE CODE NO. | GA | MATERIAL | LG | TERMINALS | | N/A | SERIALS |
|---|---|---|---|---|---|---|---|
| R-CA29 | 22 | | | SOLDER | SOLDER | 0770060 | |
| R-CA28 | 22 | | | | | | |
| R-CA27 | 22 | | | | | | |
| R-CA26 | 22 | | | | | | |
| R-CA25 | 22 | | | | | | |
| R-CA24 | 22 | | | | | | |
| R-CA23 | 22 | | | | | | |
| R-CA22 | 20 | | | | | | |
| R-CA21 | 22 | | | | | | |
| R-CA20 | 22 | | | | | | |
| R-CA19 | 22 | | | | | | |
| R-CA18 | 22 | | | | | | |
| R-CA17 | 20 | | | | | | |
| R-CA16 | 20 | | | SOLDER | SOLDER | 0770060 | |
| R-CA15 | 22 | | | S-1367-1-8 | S-1367-1-8 | 0770059 | |
| R-CA14 | 18 | | | S-1367-1-8 | SOLDER | 0770060 | |
| R-CA13 | 18 | | | S-1367-1-8 | SOLDER | | |
| R-CA12 | 16 | | | SOLDER | S-1367-1-8 | | |
| R-CA11 | 20 | | | | | | |
| R-CA10 | 20 | | | | | | |
| R-CA9 | 22 | | | | | | |
| R-CA8 | 22 | | | | | | |
| R-CA7 | 22 | | | | | | |
| R-CA6 | 22 | | | | | | |
| R-CA5 | 22 | | | | | | |
| R-CA4 | 22 | | | | | | |
| R-CA3 | 22 | | | | | | |
| R-CA2 | 22 | | | | | | |
| R-CA1 | 22 | | | SOLDER | SOLDER | 0770060 | |

WIRE TABLE

CESSNA AIRCRAFT CO. COMMERCIAL AIRCRAFT DIVISION WICHITA KANSAS

| | NAME | DATE |
|---|---|---|
| DRAWN | SOLTESZ | 10-5-62 |
| GROUP | N. Tennant | 10-23-62 |
| CHECK | R. Stuck | 10-19-62 |
| PROJ | R. Sattle | 10-23-62 |

TITLE: WIRING DIAGRAM — NAV-O-MATIC 200 & 300 SYSTEMS (OPT)

Cessna.

DWG NO. 0700092

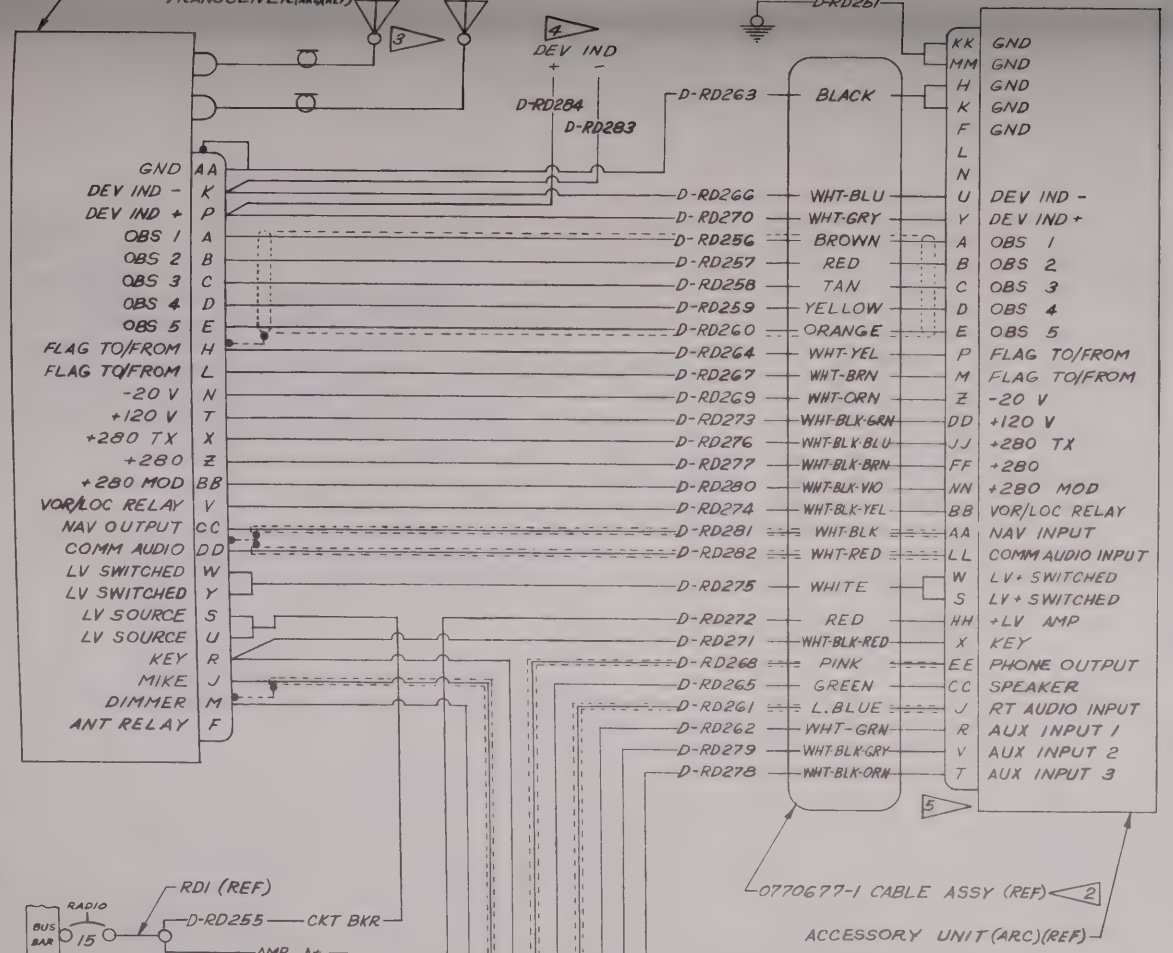


| ITEM NO | PART NO. | DESCRIPTION | INSTALLED ON |
|---|---|---|---|

EQUIPMENT TABLE

| LTR | REVISION | DATE | APPROVED |
|---|---|---|---|
| A | TITLE WAS ARC TYPE 513A VHF NAV-COM RADIO SYSTEM | 12-4-62 | |

NOTES:

1. WIRING SHOWN IS FOR SINGLE INSTALLATION. SEE PAGE 17.2 FOR AUDIO SWITCHING SCHEMATIC. WHEN SWITCHING IS USED CONNECT D-RD261 TO SWITCHBOX INSTEAD OF R.P.2.
2. CABLE ASSY & SCHEMATIC SAME AS MODEL 182. WIRES NUMBERED D-RD256 THRU D-RD282 ARE NOT REQD WHEN 1G1548 CABLE IS USED. FOR WIRE SIZES & CODING INSTRUCTIONS (D-RD251 THRU D-RD284) SEE 0770610 PAGES 17.4 & 17.4.1.
3. ANTENNA CABLES ARE ATTACHED TO DUST COVER WHEN INSTALLED IN AIRCRAFT.
4. D-RD283 & D-RD284 SHALL BE ADDED WHEN OPTIONAL NAV-O-MATIC WITH OMNI COUPLER IS INSTALLED.
5. WIRE SHIELDS NOT GROUNDED THIS PLUG.

| WIRE CODE NO. | GA | MATERIAL | LG | TERMINALS | SERIALS |
|---|---|---|---|---|---|
| | | | | | |

WIRE TABLE

CESSNA AIRCRAFT CO COMMERCIAL AIRCRAFT DIVISION WICHITA KANSAS

| | NAME | DATE |
|---|---|---|
| DRAWN | SPRIGGS | 10-2-62 |
| GROUP | V. Jepsen | 10-31-62 |
| CHECK | R. Stuck | 10-30-62 |
| PROJ | [illegible] | 10-30-62 |

TITLE: WIRING DIAGRAM — CESSNA NAV-COM 300 (ARC TYPE 513A) (OPT)

Cessna.

DWG NO. 0700092

| SUPERSEDED BY | SUPERSEDES | MODEL: | REV. | PAGE: |
|---|---|---|---|---|
| | | 180, 185 | A | 17.4 |

FORM NO. 80-161 R

| CHG LET | REVISION | BY / DATE | CHK / APPD |
|---|---|---|---|
| | | | |

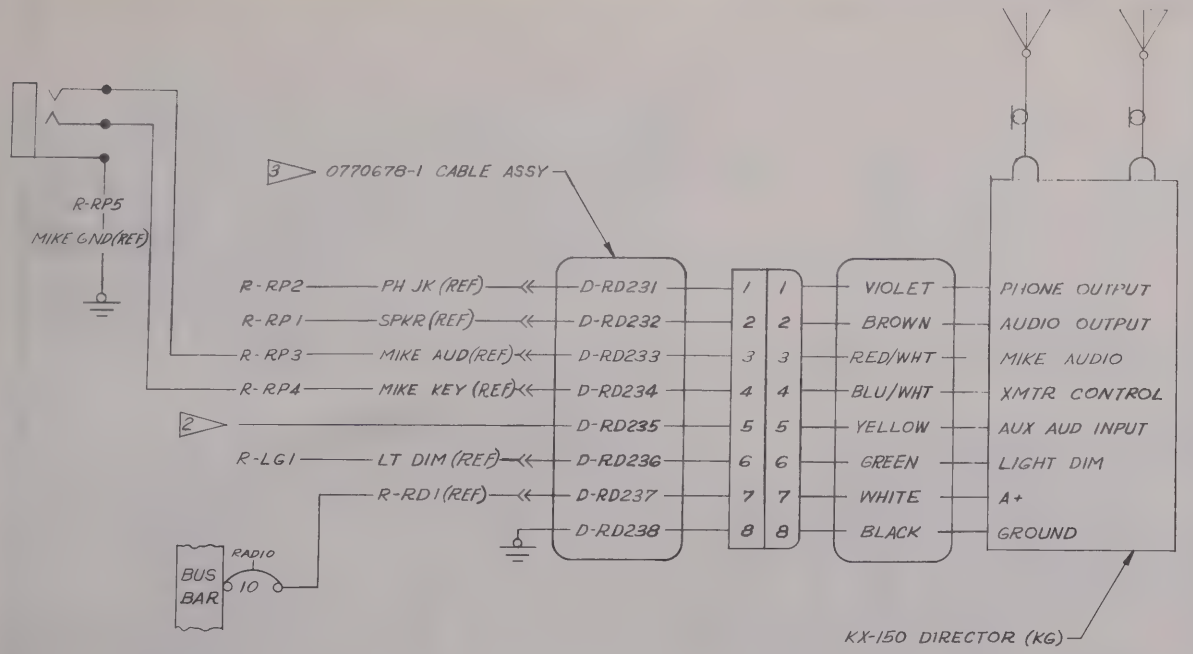


NOTES:

1. WIRING SHOWN IS FOR SINGLE INSTALLATION. SEE PAGE 17.2.1 FOR MULTIPLE INSTALLATION.
2. END OF WIRE SHALL BE SLEEVED AND TIED INTO CABLE UNTIL USED.
3. CABLE ASSEMBLY & SCHEMATIC SAME AS MODEL 182. FOR WIRE SIZES & CODING INSTRUCTIONS SEE 0770610 PAGE 17.8.

| WIRE CODE NO. | GA | MATERIAL | LG | TERMINALS | | SERIALS |
|---|---|---|---|---|---|---|
| | | | | | | |

WIRE TABLE

CESSNA AIRCRAFT CO. COMMERCIAL AIRCRAFT DIVISION, WICHITA, KANSAS

| | NAME | DATE |
|---|---|---|
| DRAWN | SPRIGGS | 10-5-62 |
| GROUP | | 12-10-62 |
| CHECK | | |

TITLE: WIRING DIAGRAM — KING KX-150

Cessna.

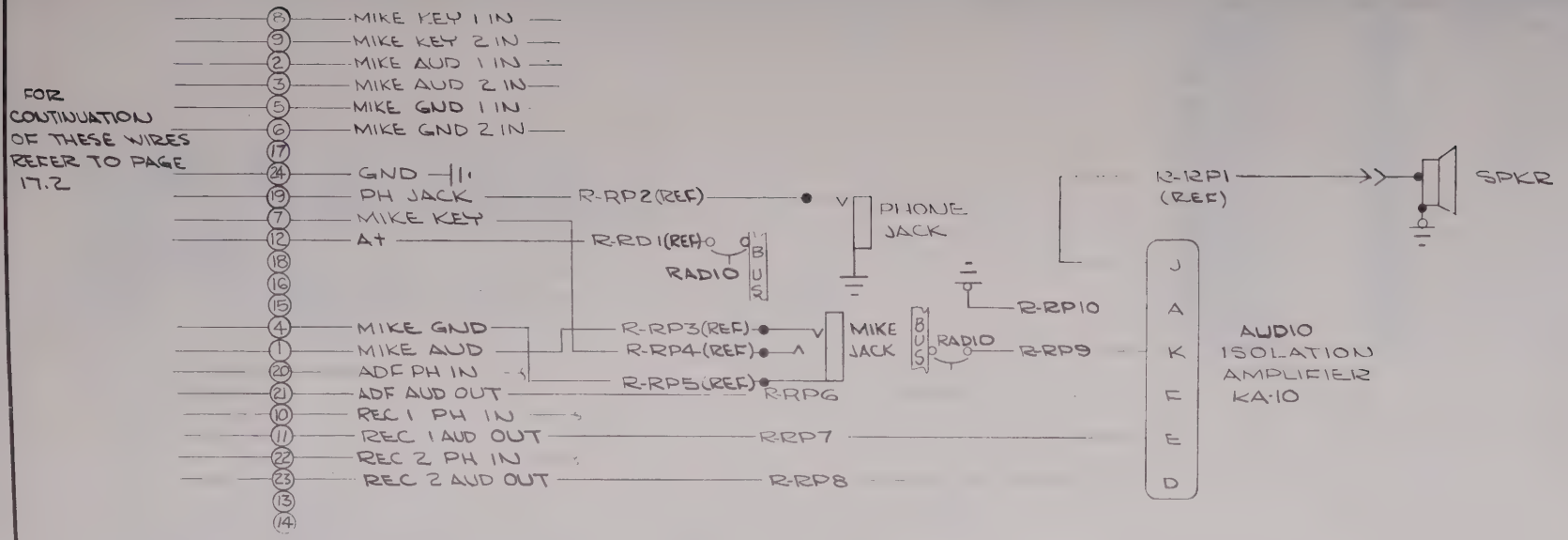


| WIRE CODE NO. | GA | MATERIAL | LG | TERMINALS | | | SERIALS |
|---|---|---|---|---|---|---|---|
| R-RP10 | 18 | | | S-1567-1-6 | - | | |
| R-RP9 | 16 | | | S-1561-2-8 | - | | |
| R-RP8 | 18 | | | - | - | | |
| R-RP7 | 18 | | | - | - | | |
| R-RP6 | 18 | | | - | - | | |

WIRE TABLE

| ITEM NO | PART NO. | DESCRIPTION | INSTALLED ON |
|---|---|---|---|

EQUIPMENT TABLE

CESSNA AIRCRAFT CO. COMMERCIAL AIRCRAFT DIVISION, WICHITA KANSAS

| | NAME | DATE |
|---|---|---|
| DRAWN | JOHNSON | 11/18/62 |
| GROUP | V Tennant | 1-3-63 |
| CHECK | R. Stuck | 1 2 63 |
| PROJ | K. Sattler | 1-3-63 |

TITLE: WIRING DIAGRAM — AUDIO ISOLATION AMPLIFIER KA-10 (OPT)

Cessna.

DWG NO. 0700092

| SUPERSEDED BY | SUPERSEDES | MODEL 180-185 | REV | PAGE 17.6 |
|---|---|---|---|---|

FORM NO. 80-161

(SR4012)

| CHG LET | REVISION | BY / DATE | CHK / APPD |
|---|---|---|---|
| A | ADD KY-95 TO TITLE | DAE 1-19-63 | |

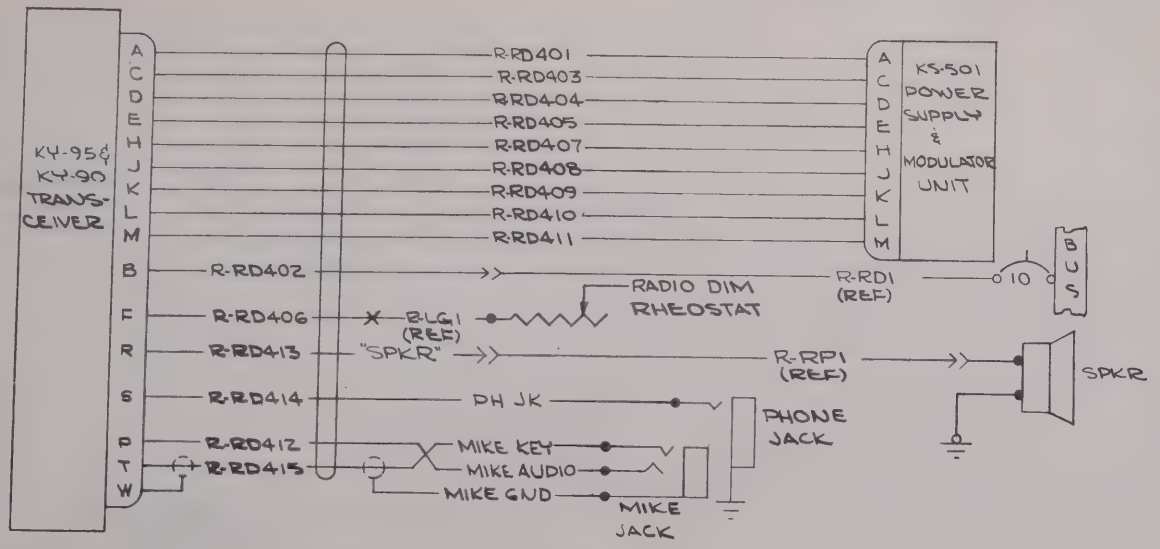


NOTES:

1. R-RD401 THRU R-RD415 ARE IDENTICAL TO & SUPERSEDE 0770030-D-RD401 THRU D-RD415 RESPECTIVELY
2. WIRES R-RD406, R-RD413, R-RD414, R-RD412 & R-RD415 TO BE CODED "LT DIM", "SPKR", "PH JK", "MIKE AUDIO", & "MIKE KEY" RESPECTIVELY. NUMERICAL CODING PER CES 1100 OPT

| WIRE CODE NO. | GA | MATERIAL | LG | TERMINALS | | N/A | SERIALS |
|---|---|---|---|---|---|---|---|
| R-RD415 | 20S | | 75 | —— | —— | 0770030 | |
| R-RD414 | 22 | | 60 | —— | —— | | |
| R-RD413 | 22 | | 65 | —— | S-341-2 | | |
| R-RD412 | 22 | | 75 | —— | —— | | |
| R-RD411 | 22 | | 20S | —— | —— | | |
| R-RD410 | 22 | | 20S | —— | —— | | |
| R-RD409 | 22 | | 20S | —— | —— | | |
| R-RD408 | 22 | | 20S | —— | —— | | |
| R-RD407 | 22 | | 20S | —— | —— | | |
| R-RD406 | 18 | | 65 | —— | S-1370-1 | | |
| R-RD405 | 16 | | 225 | —— | —— | | |
| R-RD404 | 22 | | 20S | —— | —— | | |
| R-RD403 | 16 | | 225 | —— | —— | | |
| R-RD402 | 16 | | 75 | —— | S-1367-1-B | | |
| R-RD401 | 22 | | 20S | —— | —— | 0770030 | |

WIRE TABLE

CESSNA AIRCRAFT CO COMMERCIAL AIRCRAFT DIVISION WICHITA KANSAS

| | NAME | DATE |
|---|---|---|
| DRAWN | JOHNSON | 7/18/62 |
| GROUP | | |

TITLE: WIRING DIAGRAM —

2. FOR DESCRIPTION OF WIRES R-RD401 THRU R-RD415, REFER TO PAGE 17.7

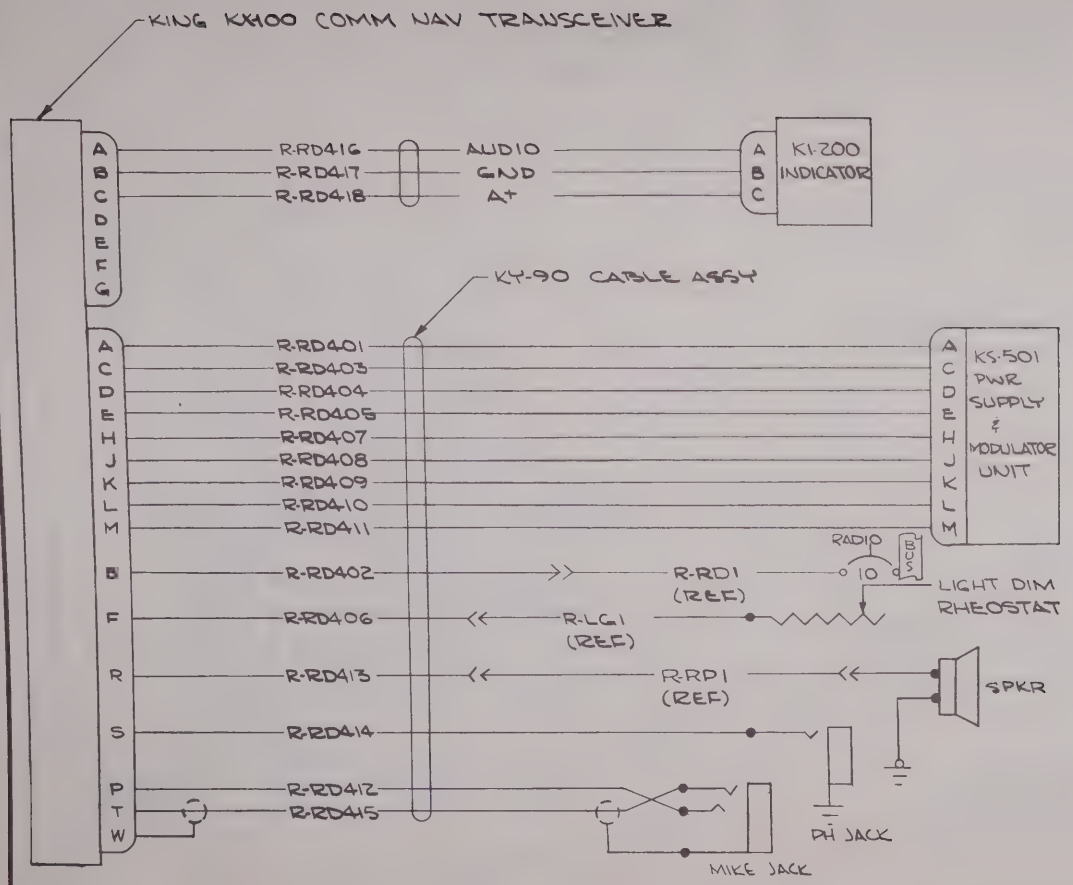


| | | | | | | | |
|---|---|---|---|---|---|---|---|
| | | | | | | | |
| | | | | | | | |
| | | | | | | | |
| | | | | | | | |
| | | | | | | | |
| | | | | | | | |
| | | | | | | | |
| | | | | | | | |
| | | | | | | | |
| | | | | | | | |
| R-RD418 | 22 | | 80 | — | — | 0770030 | |
| R-RD417 | 22 | | 80 | — | — | 0770030 | |
| R-RD416 | 22 | | 80 | — | — | 0770030 | |
| WIRE CODE NO. | GA | MATERIAL | LG | TERMINALS | | N/A | SERIALS |

WIRE TABLE

| ITEM NO | PART NO. | DESCRIPTION | INSTALLED ON |
|---|---|---|---|
| | | | |

EQUIPMENT TABLE

CESSNA AIRCRAFT CO. COMMERCIAL AIRCRAFT DIVISION WICHITA KANSAS

| | NAME | DATE |
|---|---|---|
| DRAWN | JOHNSON | 10/8/62 |
| GROUP | V Jensen | 1-3-63 |
| CHECK | R Stuck | 1-2-63 |
| PROJ | J R Scott | 1-3-63 |

TITLE: WIRING DIAGRAM — KING KX-100 & KX-120 (OPT)

Cessna.

DWG NO: 0700092

| SUPERSEDED BY: | SUPERSEDES: NOTE 1 | MODEL: 180-185 | REV: | PAGE: 17.8 |
|---|---|---|---|---|

FORM NO. 80-161

(SR 4012)

| CHG LET | REVISION | BY / DATE | CHK / APPD |
|---|---|---|---|
| | | | |

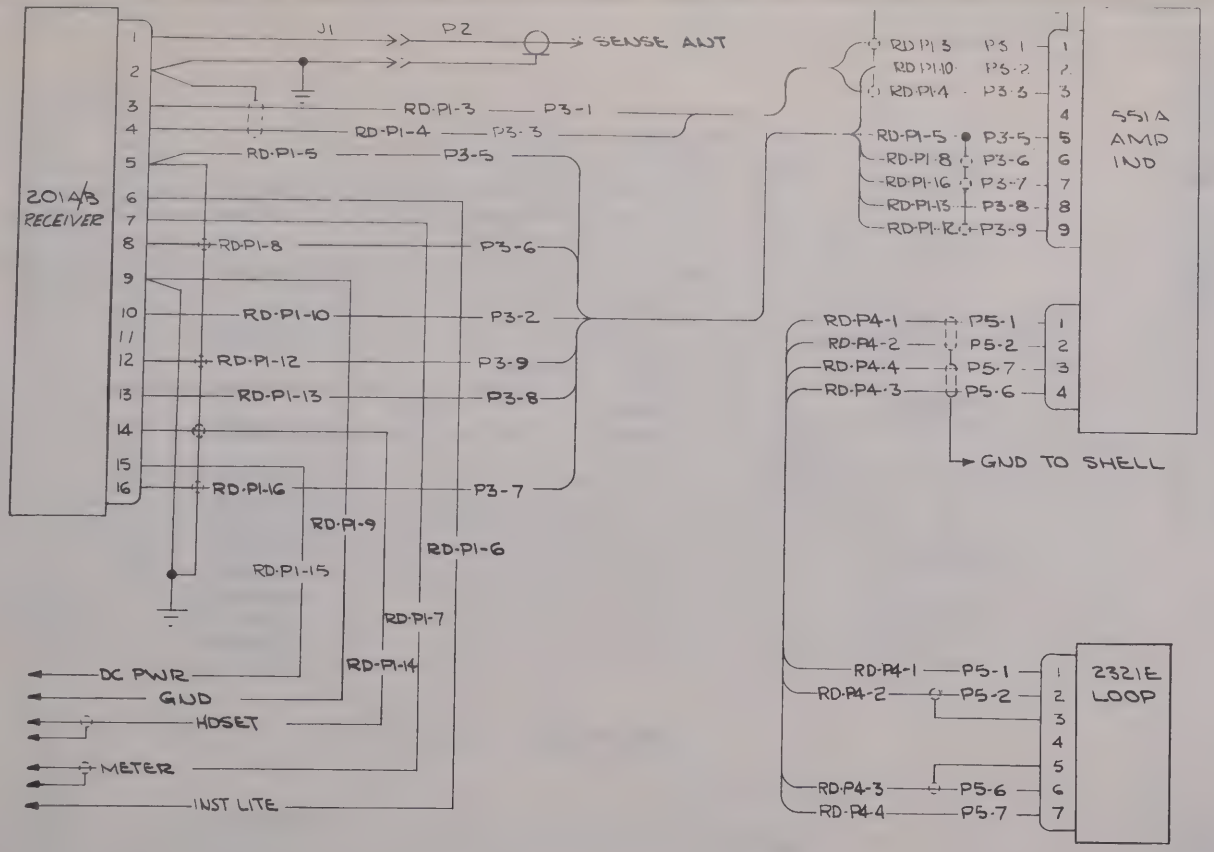


NOTES:

1. ALL WIRES & CABLES ARE VENDOR FURNISHED ITEMS

| WIRE CODE NO. | GA | MATERIAL | LG | TERMINALS | | | SERIALS |
|---|---|---|---|---|---|---|---|

WIRE TABLE

CESSNA AIRCRAFT CO., COMMERCIAL AIRCRAFT DIVISION, WICHITA, KANSAS

| | NAME | DATE |
|---|---|---|
| DRAWN | JOHNSON | 10/16/62 |
| GROUP | V Tennent | 1-3-63 |

TITLE: WIRING DIAGRAM — MOTOROLA

NOTES:

1. BELDON NO. 8899
2. WIRES R-RH1, R-RH2, R-RH3, R-RH9 THRU R-RH33 ARE IDENTICAL TO & SUPERSEDE 0770032-D-RH1, -D-RH2, -D-RH3, -D-RH9 THRU -D-RH33 RESPECTIVELY

| WIRE CODE NO. | GA | MATERIAL | LG | TERMINALS | | N/A | SERIALS |
|---|---|---|---|---|---|---|---|
| R-RH33 | 16 | | 35 | S-1367-2-8 | S-341-1 | 0770015 | |
| R-RH32 | 18S | | 220 | S-1370-1 S-1370-1 | — | | |
| R-RH31 | 20S | | 12 | — | — | | |
| R-RH30 | 18 | | 4 | S-1367-1-6 | — | | |
| 29 | 18 | | 4 | S-1367-1-8 | — | | |
| 28 | 1 | | 12 | 235-860 CLIP | — | | |
| 27 | | | 12 | | — | | |
| 26 | | | 12 | | — | | |
| 25 | | | 12 | | — | | |
| 24 | | | 12 | | — | | |
| 23 | 1 | | 12 | 235-860 CLIP | — | | |
| 22 | 14 | | 12 | S-1367-2-8 | — | | |
| 21 | 14 | | 12 | S-1367-2-10 | — | | |
| 20 | 14 | | 24 | — | — | | |
| 19 | 14 | | 24 | — | — | | |
| 18 | 14 | | 24 | — | — | | |
| 17 | 14 | | 24 | — | — | | |
| 16 | 14 | | 12 | S-1367-2-8 | — | | |
| 15 | 14 | | 24 | — | — | | |
| 14 | 14 | | 4 | S-1367-2-8 | — | | |
| 13 | 14 | | 213 | S-1367-2-6 | — | | |
| 12 | 14 | | 213 | S-1367-2-6 | — | | |
| 11 | 14 | | 213 | S-1367-2-6 | — | | |
| 10 | 14 | | 213 | S-1367-2-6 | — | | |
| 9 | 14 | | 213 | S-1367-2-6 | — | | |
| 8 | | OMITTED | | | | | |
| 7 | | OMITTED | | | | | |
| 6 | | OMITTED | | | | | |
| 5 | | OMITTED | | | | | |
| 4 | | OMITTED | | | | | |
| 3 | 18 | | 4 | S-1367-1-6 | — | | |
| 2 | 14 | | 10 | S-341-1 | S-1367-2-6 | | |
| R-RH1 | 14 | | 100 | S-341-1 | S-1367-2-8 | 0770015 | |

CLIP MFG BY (JON)

WIRE TABLE

CESSNA AIRCRAFT CO. COMMERCIAL AIRCRAFT DIVISION WICHITA KANSAS

| | NAME | DATE |
|---|---|---|
| DRAWN | JOHNSON | 10-18-63 |
| GROUP | N Isaacs | 11-6-63 |
| CHECK | R. Stuck | 11-5-63 |
| PROJ | | |

TITLE: WIRING DIAGRAM — SUNAIR RADIO T-5DA & T-10D (OPT)

Cessna.

DWG NO. 0700092

| SUPERSEDED BY | SUPERSEDES | MODEL | REV. | PAGE |
|---|---|---|---|---|
| | 0770032 | 180-185 | | 17-10 |

| ITEM NO | PART NO. | DESCRIPTION | INSTALLED ON |
|---|---|---|---|

EQUIPMENT TABLE

FORM NO. 80-161

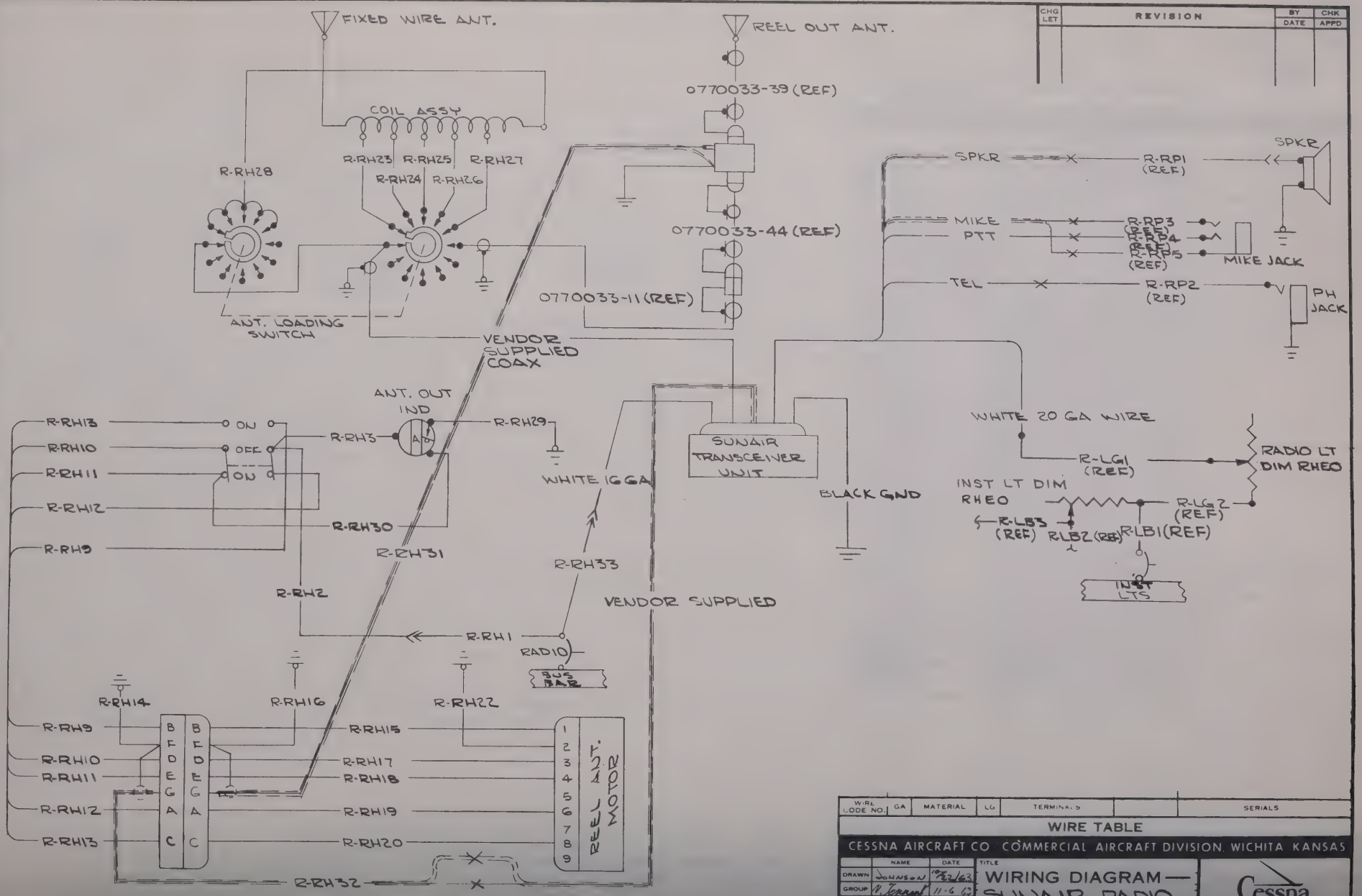
FIXED WIRE ANT.
REEL OUT ANT.
0770033-39 (REF)
COIL ASSY
R-RH23
R-RH25
R-RH27
R-RH24
R-RH26
R-RH28
0770033-44 (REF)
0770033-11 (REF)
ANT. LOADING SWITCH
VENDOR SUPPLIED COAX
SPKR
R-RP1 (REF)
SPKR
MIKE
PTT
R-RP3 (REF)
R-RP4 (REF)
R-RP5 (REF)
MIKE JACK
TEL
R-RP2 (REF)
PH JACK
ANT. OUT IND
R-RH3
R-RH29
R-RH13
R-RH10
R-RH11
R-RH12
R-RH9
ON
OFF
ON
R-RH30
R-RH31
R-RH2
WHITE 16 GA
SUNAIR TRANSCEIVER UNIT
BLACK GND
WHITE 20 GA WIRE
R-LG1 (REF)
RADIO LT DIM RHEO
INST LT DIM RHEO
R-LG2 (REF)
R-LB3 (REF)
R-LB2 (REF)
R-LB1 (REF)
INST LTS
R-RH33
VENDOR SUPPLIED
R-RH1
RADIO BUS BAR
R-RH14
R-RH16
R-RH22
R-RH9
R-RH10
R-RH11
R-RH12
R-RH13
R-RH15
R-RH17
R-RH18
R-RH19
R-RH20
REEL ANT. MOTOR
R-RH32
CHG LET
REVISION
BY
DATE
CHK
APPD
WIRE TABLE
CESSNA AIRCRAFT CO COMMERCIAL AIRCRAFT DIVISION WICHITA KANSAS
DRAWN JOHNSON 12/2/63
GROUP N. Terrell 11-6-63
CHECK R. Black 11-5-63
WIRING DIAGRAM — SUNAIR RADIO T-5DA & T-10D (ORT)
Cessna.
DWG NO 0700092

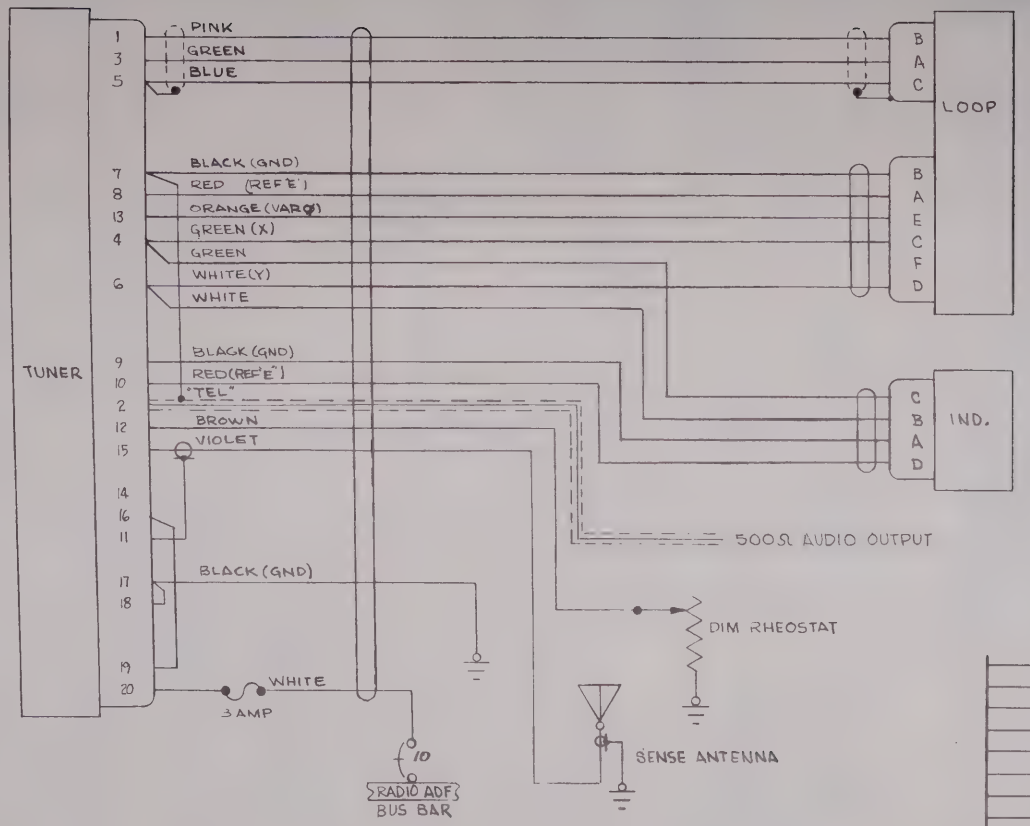


NOTES.
1. ALL WIRING PART OF TUNER.
2. REFER TO 0770065 FOR INSTALLATION.

| WIRE CODE NO. | GA | MATERIAL | LG | TERMINALS | | | SERIALS |
|---|---|---|---|---|---|---|---|

WIRE TABLE

CESSNA AIRCRAFT CO. COMMERCIAL AIRCRAFT DIVISION WICHITA KANSAS

| | NAME | DATE |
|---|---|---|
| DRAWN | W COOK | 1-14-63 |
| GROUP | V. Tennant | 2-1-63 |
| CHECK | R. Stuck | 1-31-63 |
| PROJ | [illegible] | 2-4-63 |

TITLE
WIRING DIAGRAM —
CESSNA ADF 300 (OPT)
(ARC TYPE 521A)
(OPT)

Cessna.

DWG NO: 0700092

SUPERSEDED BY | SUPERSEDES | MODEL: 180-185 | REV: A | PAGE: 17.11

| ITEM NO | PART NO. | DESCRIPTION | INSTALLED ON |
|---|---|---|---|

EQUIPMENT TABLE

FORM NO. 80-161

(SR4260)

| CHG LET | REVISION | BY / DATE | CHK / APPD |
|---|---|---|---|
| | | | |

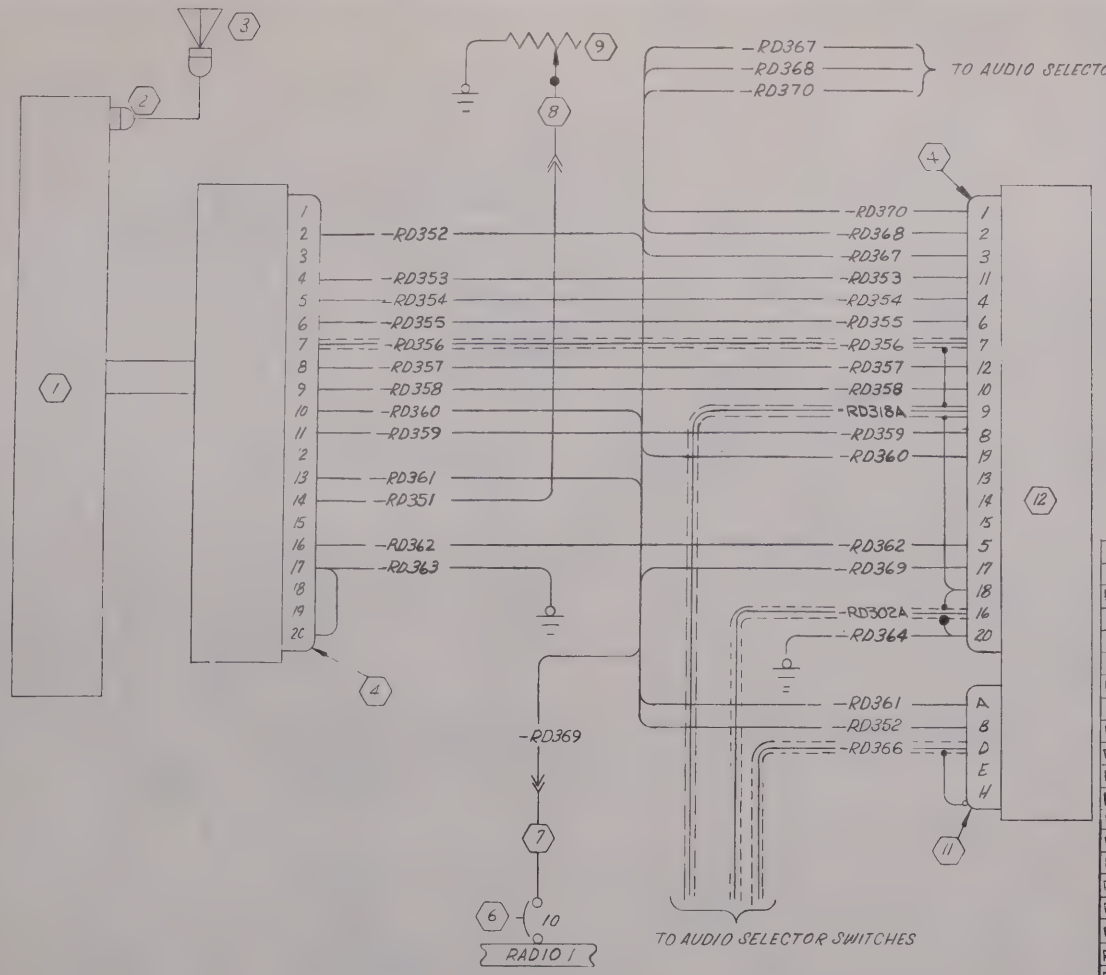


| | | | | | | | |
|---|---|---|---|---|---|---|---|
| RD302A | 22S | | | | — | 0770078 | |
| RD318A | 22S | | | | — | | |
| RD370 | 20 | | | | — | | |
| RD369 | 16 | | | S-341-1 | — | | |
| RD368 | 22 | | | | — | | |
| RD367 | 22 | | | | — | | |
| RD366 | 22S | | | | — | | |
| RD365 | | | | | | | NOT USED |
| RD364 | 16 | | | S-1367-2-8 | — | | |
| RD363 | 16 | | | S-1367-2-8 | — | | |
| RD362 | 22 | | | — | — | | |
| RD361 | 22 | | | — | — | | |
| RD360 | 18 | | | — | — | | |
| RD359 | 22 | | | — | — | | |
| RD358 | 22 | | | — | — | | |
| RD357 | 22 | | | — | — | | |
| RD356 | 22S | | | — | — | | |
| RD355 | 22 | | | — | — | | |
| RD354 | 22 | | | — | — | | |
| RD353 | 22 | | | — | — | | |
| RD352 | 22 | | | — | — | | |
| RD351 | 22 | | | S-341-2 | — | 0770078 | |
| WIRE CODE NO. | GA | MATERIAL | LG | TERMINALS | | N/A | SERIALS |

WIRE TABLE

| | | | |
|---|---|---|---|
| 12 | DV-302A | DYNAVERTER (ARC) | |
| 11 | 28371 | PLUG (ARC) | |
| 10 | | | |
| 9 | 0413126-4 | RHEOSTAT | |
| 8 | 0700092 RLG1 | WIRE | |
| 7 | 0700092-R-RD1 | WIRE | |
| 6 | PSM-10N | CIRCUIT BREAKER (KLIXON) | |
| 5 | | | |
| 4 | 28808 | PLUG (ARC) | |
| 3 | A-25A | ANTENNA (ARC) | |
| 2 | 0770033-85 | CABLE ASSY | |
| 1 | RT-302A | TRANSCEIVER (ARC) | |

CESSNA AIRCRAFT CO. COMMERCIAL AIRCRAFT DIVISION, WICHITA, KANSAS

| | NAME | DATE |
|---|---|---|
| DRAWN | W. COOK | 6-5-63 |
| GROUP | V. Tempel | 6-11-63 |
| CHECK | R. Stuck | 6-8-63 |
| PROJ | [illegible] | 6-11-63 |

TITLE: WIRING DIAGRAM — ARC 302A - 24 VOLT (OPT)

Cessna.

DWG NO 0700092

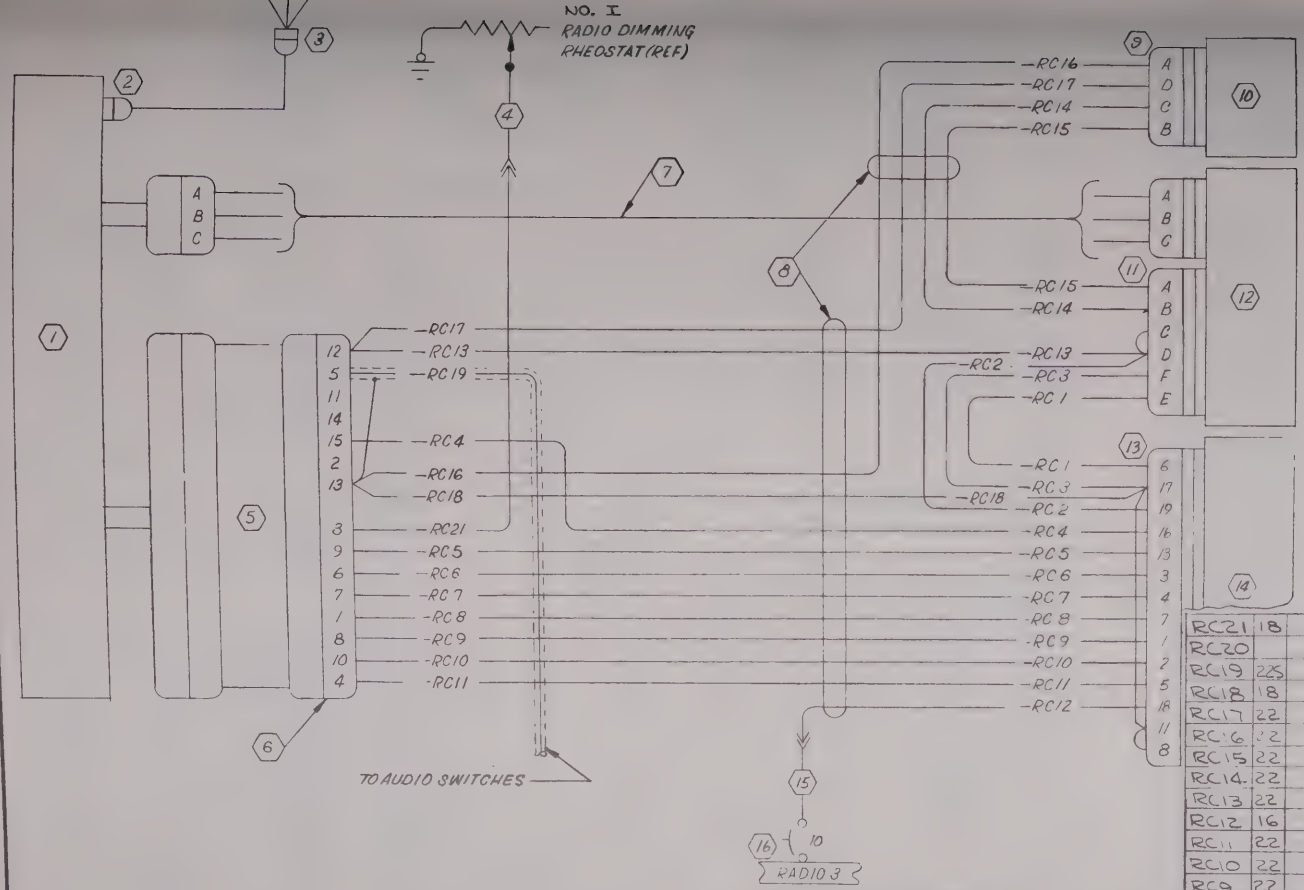


| ITEM NO | PART NO | DESCRIPTION | INSTALLED ON |
|---|---|---|---|
| 16 | PSM 10N | CIRCUIT BREAKER (KLIXON) | |
| 15 | 0700092-R RD1 | WIRE | |
| 14 | DV-318A | DYNAVERTER (ARC) | |
| 13 | 27881 | CONNECTOR (ARC) | |
| 12 | L-11 | LOOP (ARC) | |
| 11 | 19062 | CONNECTOR (ARC) | |
| 10 | IN-318A | INDICATOR (ARC) | |
| 9 | 13617 | CONNECTOR (ARC) | |
| 8 | 0770076-1 | CABLE ASSY | |
| 7 | 17985 | LOOP CABLE (ARC) | |
| 6 | 26795 | CONNECTOR (ARC) | |
| 5 | 27873 | FILTER KIT (ARC) | |
| 4 | 0700092-R-LG1 | WIRE | |
| 3 | 0770010-13 | ANTENNA | |
| 2 | 18637 | ANT. CABLE (ARC) | |
| 1 | R-318A | RECEIVER (ARC) | |

EQUIPMENT TABLE

| WIRE CODE NO | GA | MATERIAL | LG | TERMINALS | | N/A | SERIALS |
|---|---|---|---|---|---|---|---|
| RC21 | 18 | | | — | S-341-2 | 0770076 | |
| RC20 | | | | | | | NOT USED |
| RC19 | 22S | | | — | — | | |
| RC18 | 18 | | | — | — | | |
| RC17 | 22 | | | — | — | | |
| RC16 | 22 | | | — | — | | |
| RC15 | 22 | | | — | — | | |
| RC14 | 22 | | | — | — | | |
| RC13 | 22 | | | — | — | | |
| RC12 | 16 | | | S-341-1 | — | | |
| RC11 | 22 | | | — | — | | |
| RC10 | 22 | | | — | — | | |
| RC9 | 22 | | | — | — | | |
| RC8 | 22 | | | — | — | | |
| RC7 | 22 | | | — | — | | |
| RC6 | 22 | | | — | — | | |
| RC5 | 22 | | | — | — | | |
| RC4 | 16 | | | — | — | | |
| RC3 | 22 | | | — | — | | |
| RC2 | 22 | | | — | — | | |
| RC1 | 22 | | | — | — | 0770076 | |

WIRE TABLE

CESSNA AIRCRAFT CO., COMMERCIAL AIRCRAFT DIVISION, WICHITA, KANSAS

| | NAME | DATE |
|---|---|---|
| DRAWN | W COOK | 6-5-63 |
| GROUP | V Tennant | 6-11-63 |
| CHECK | R. Stuck | 6-9-63 |
| PROJ | [illegible] | 6-11-63 |

TITLE: WIRING DIAGRAM — ARC 318A - 24 VOLT (OPT)

Cessna.

DWG NO 0700092

SUPERSEDED BY | SUPERSEDES | MODEL: 180-185 | REV: | PAGE: 17.14

FORM NO. 80-161

SR4260

| CHG LET | REVISION | BY DATE | CHK APPD |
|---|---|---|---|
| | | | |

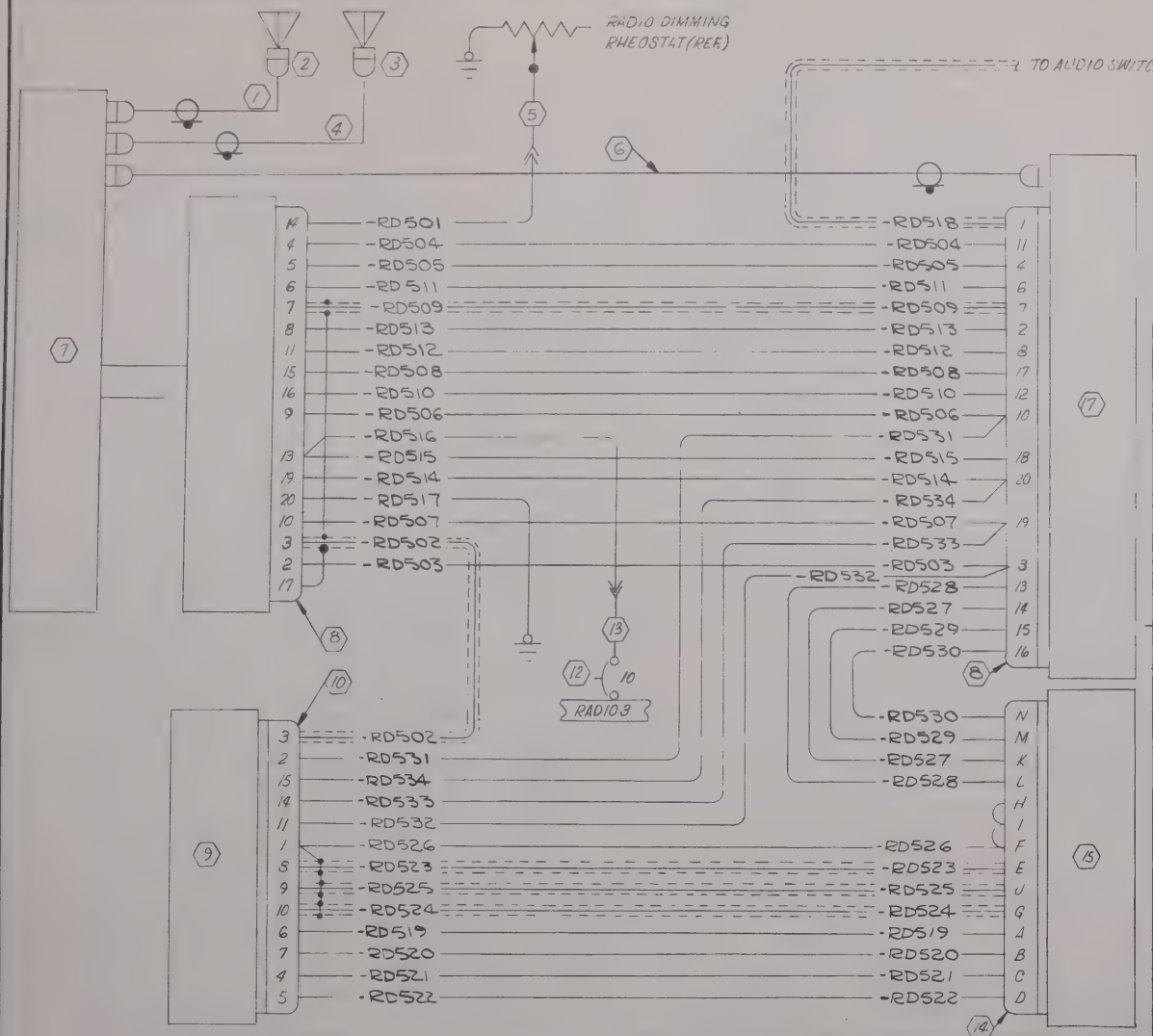


| WIRE NO. | GA | MATERIAL | LG | TERMINALS | | SERIALS |
|---|---|---|---|---|---|---|
| RD534 | 18 | | | — | — | 0770082 |
| RD533 | 18 | | | — | — | |
| RD532 | 22 | | | — | — | |
| RD531 | 22 | | | — | — | |
| RD530 | 22 | | | — | — | |
| RD529 | 22 | | | — | — | |
| RD528 | 22 | | | — | — | |
| RD527 | 22 | | | — | — | |
| RD526 | 22 | | | — | — | |
| RD525 | 22S | | | — | — | |
| RD524 | 22S | | | — | — | |
| RD523 | 22S | | | — | — | |
| RD522 | 22 | | | — | — | |
| RD521 | 22 | | | — | — | |
| RD520 | 22 | | | — | — | |
| RD519 | 22 | | | — | — | |
| RD518 | 22S | | | — | — | |
| RD517 | 18 | | | S-1367-1-8 | — | |
| RD516 | 18 | | | S-341-1 | — | |
| RD515 | 16 | | | — | — | |
| RD514 | 18 | | | — | — | |
| RD513 | 22 | | | — | — | |
| RD512 | 22 | | | — | — | |
| RD511 | 22 | | | — | — | |
| RD510 | 22 | | | — | — | |
| RD509 | 22S | | | — | — | |
| RD508 | 22 | | | — | — | |
| RD507 | 16 | | | — | — | |
| RD506 | 22 | | | — | — | |
| RD505 | 22 | | | — | — | |
| RD504 | 22 | | | — | — | |
| RD503 | 22 | | | — | — | |
| RD502 | 22S | | | — | — | |
| RD501 | 20 | | | S-341-2 | — | 0770082 |
| | | | | | | N/A |

WIRE TABLE

| PART NO | DESCRIPTION | INSTALLED ON |
|---|---|---|
| 17 | DV-319A | DYNAVERTER(ARC) | |
| 16 | | | |
| 15 | IN-319A-1 | INDICATOR(ARC) | |
| 14 | 27826 | PLUG (ARC) | |
| 13 | 0700092-R-RD1 | WIRE | |
| 12 | PSM-101N | CIRCUIT BKR(SPTD) | |
| 11 | | | |
| 10 | 27825 | PLUG (ARC) | |
| 9 | B-317A | CONVERTER (ARC) | |
| 8 | 28822 | PLUG(ARC) | |
| 7 | R-319A | RECEIVER(ARC) | |
| 6 | 0770033-114 | CABLE ASSY | |
| 5 | 0770092-R-LG1 | WIRE | |
| 4 | 0770033-112 | CABLE ASSY | |
| 3 | 0770625-11 | ANTENNA-GL. SLOPE | |
| 2 | 0770010-16 | ANTENNA-OMNI | |
| 1 | 0770033-117 | CABLE ASSY | |

CESSNA AIRCRAFT CO. COMMERCIAL AIRCRAFT DIVISION WICHITA, KANSAS

| | NAME | DATE |
|---|---|---|
| DRAWN | W COOK | 6-13-63 |
| GROUP | V Jensen | 6-18-63 |
| CHECK | A. Stuck | 6-18-63 |
| PROJ | J. SATTERLY | 6-18-63 |

TITLE
# WIRING DIAGRAM — ARC 319A — 24 VOLT

Cessna.

DWG NO
0700092

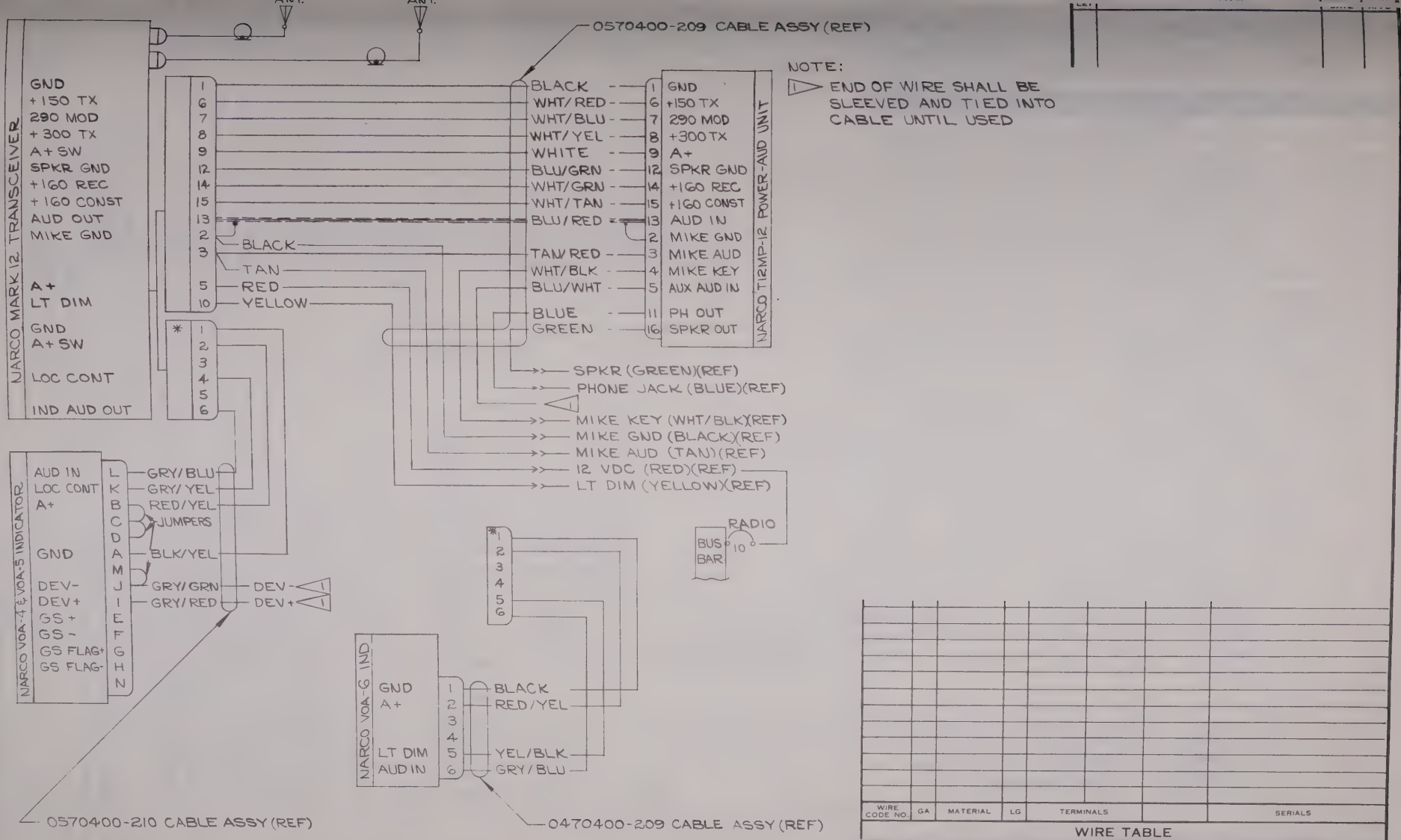


NOTE:

1. END OF WIRE SHALL BE SLEEVED AND TIED INTO CABLE UNTIL USED

| WIRE CODE NO. | GA | MATERIAL | LG | TERMINALS | | SERIALS |
|---|---|---|---|---|---|---|

WIRE TABLE

| ITEM NO | PART NO. | DESCRIPTION | INSTALLED ON |
|---|---|---|---|

EQUIPMENT TABLE

CESSNA AIRCRAFT CO. COMMERCIAL AIRCRAFT DIVISION WICHITA, KANSAS

| | NAME | DATE |
|---|---|---|
| DRAWN | GILES | 9-23-63 |
| GROUP | W. Tomm | 10-23-63 |
| CHECK | E. Stuck | 10-22-63 |
| PROJ | E. Stuck | 10-24-63 |

TITLE: WIRING DIAGRAM — NARCO MARK 12 WITH VOA-4, VOA-5 OR VOA-6

Cessna

DWG NO. 0700092

| SUPERSEDED BY | SUPERSEDES | MODEL: 180-185 | REV | PAGE: 17.19 |
|---|---|---|---|---|

FORM NO. 80-161

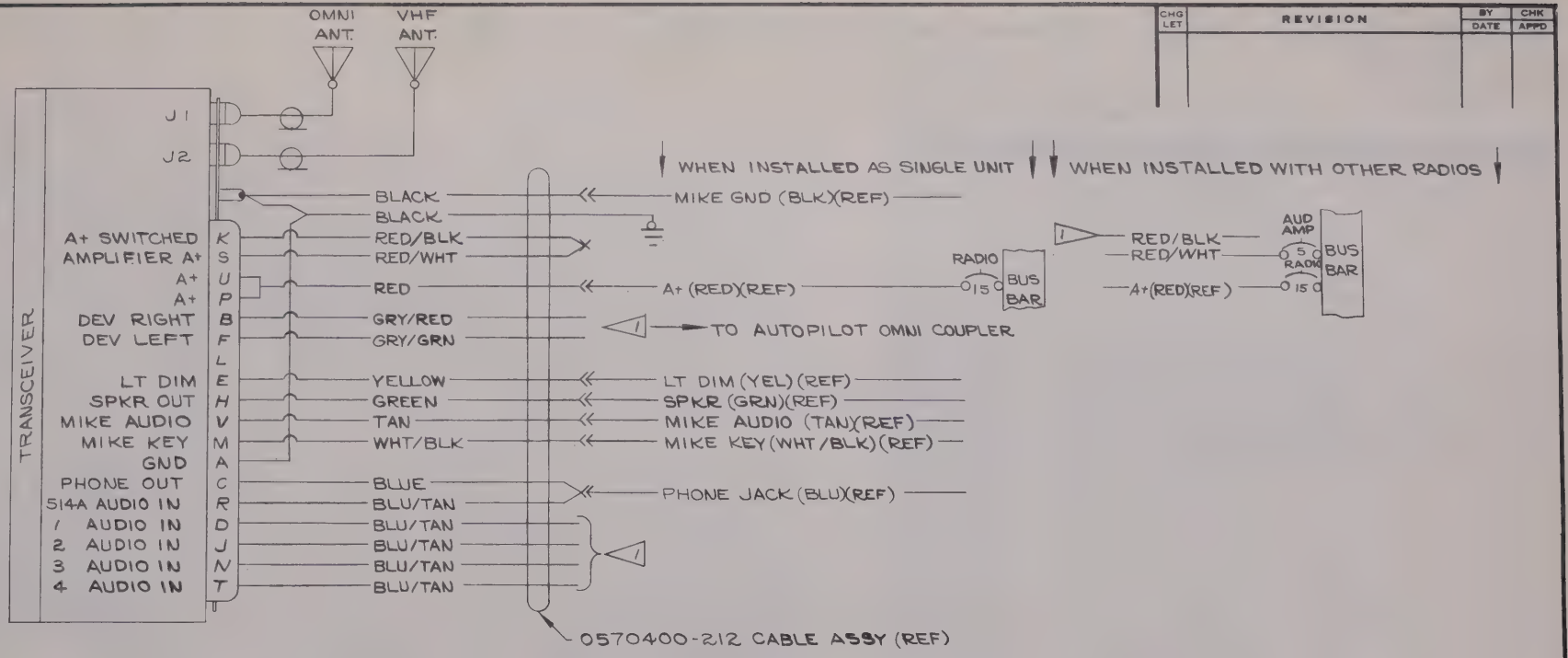


| CHG LET | REVISION | BY DATE | CHK APPD |
|---|---|---|---|
| | | | |

NOTES:

1. WIRES NOT USED SHALL BE SLEEVED AND TIED INTO BUNDLE
2. USE DIAGRAM FOR REFERENCE ONLY. REFER TO 0570400 PAGE 2.12.1 FOR WIRING REQUIREMENTS & PAGE 2.12.0 FOR CABLE ASSY

| WIRE CODE NO. | GA | MATERIAL | LG | TERMINALS | | SERIALS |
|---|---|---|---|---|---|---|
| | | | | | | |

WIRE TABLE

| | NAME | DATE |
|---|---|---|
| DRAWN | GILES | 10-31-63 |
| GROUP | | 11-12-63 |
| CHECK | | 11-11-63 |
| PROJ | | 11-11-63 |

CESSNA AIRCRAFT CO. COMMERCIAL AIRCRAFT DIVISION WICHITA KANSAS

TITLE: WIRING DIAGRAM — CESSNA NAV-COMM 300 (ARC TYPE 514A)

Cessna.

DWG NO. 0700092

| PART NO | DESCRIPTION | INSTALLED ON |
|---|---|---|
| | | |

# TABLE OF CONTENTS

**1965 & ON**
**18051446 & ON**
**185-0777 & ON**


| PAGE NO. | TITLE | DATE ISSUED | REV |
|---|---|---|---|
| 0.1 | Wiring Diagram - Radio Audio, Power, & Lighting | 6-28-65 | A |
| 0.2 | Wiring Diagram - Audio Selector Switching | | |
| 0.3 | Wiring Diagram - Xmtr Selector Switching | | |
| 0.4 | Wiring Diagram - Muting Relay | | |
| 3.1 | Wiring Diagram - Cessna Nav-Comm 300 (ARC Type 514A) | 5-20-65 | Inac. |
| 3.1.1 | Wiring Diagram - Cessna Nav-Comm 300 (ARC Type 514A) | 5-20-65 | Inac. |
| 3.2 | Cessna Comm 300 (ARC Type 524A) | 8-5-64 | |
| 4.2 | Wiring Diagram - King KY-95 & KX-120 | | |
| 7.1 | Wiring Diagram - King KA-10 Isolation Amplifier | 12-7-65 | NC Inac |
| 8.2 | Wiring Diagram - Narco Mark 12 | | |
| 9.1 | Wiring Diagram - King KX-150A & KX-150 AE | 2-24-65 | A |
| 10 | Wiring Diagram - Narco Mark IV Superhomer | | |
| 11 | Wiring Diagram - Cessna ADF 300 (ARC Type 521B) | 10-19-65 | A |
| 12.1 | Wiring Diagram - Narco Mark 12 with UGR-1A & VOA-5 | | |
| 13 | Wiring Diagram - Remote Mkr Bcn Lights & Sense Switch | | |
| 14.1 | Wiring Diagram - Cessna Marker Beacon 300 (ARC Type 502B) | | |
| 16.1 | Wiring Diagram - Cessna Nav-Comm 300R (ARC Type 514R, 515R) | 5-22-65 | A |
| 17.1 | Cessna Nav/Omni 300 (ARC Type 525A) | 5-27-65 | |
| 19.1 | Wiring Diagram - Cessna Transceiver 500 (ARC Type 302G) | 11-16-65 | |
| 19.2 | Wiring Diagram - Cessna Transceiver 500 (24V) | 2-8-65 | |
| 20.1.1 | Wiring Diagram - Cessna Nav/Comm 500 (ARC Type 317G) | 11-16-64 | |
| 21.1 | Wiring Diagram - Cessna ADF 500 (ARC Type 318G) | 5-22-65 | Inac. |
| 21.2 | Wiring Diagram - ARC 318G ADF (24 Volt) (ARC Type 318G) | 9-17-65 | A |
| 22.0 | Cable Assembly - Cessna Nav/Omni 500 (ARC Type 319G) | 11-12-64 | |
| 22.1.1 | Wiring Diagram - Cessna Nav/Omni 500 (ARC Type 319G) | 11-16-64 | |
| 23.1 | Wiring Diagram - King KN-60 DME | 11-30-64 | |
| 27.1.3 | Pantronics DX10-D HF Trans. Instl. | 3-30-65 | |
| 27.1.4 | Pantronics DX10-D HF Trans. Instl. | 3-30-65 | |
| 29.1 | Trans & Audio Selector Switching for VHF, ADF, HF | 1-25-65 | |
| 29.2 | Trans & Audio Selector Switching for VHF, ADF, HF | 1-25-65 | |
| 30.1 | Wiring Diagram-Sunair HF Transceiver T-10-D (24 Volt) | 2-1-65 | |

# TABLE OF CONTENTS


| PAGE NO. | TITLE | DATE ISSUED | RE |
|---|---|---|---|
| 2.31.1 | Wiring Diagram - Cessna ADF 500 (Goniometer) (ARC Type 318G) | 10-19-65 | A |
| 2.32.1.1 | Wiring Diagram - Pantronics DX10-DA | 4-28-65 | |
| 2.32.1.2 | Wiring Diagram - Pantronics DX10-DA | 10-19-65 | A |
| 2.32.1.3 | Wiring Diagram - Pantronics DX10-DA | 10-19-65 | A |
| 2.34.1 | Cessna Nav-Comm 300 (ARC Type 516A) | 5-20-65 | |
| 2.35.1 | Marker Bcn. Cessna Nav/Omni 300 (ARC Type 525A) | 5-27-65 | |
| 2.36.1 | Wiring Diagram - King KX-160E Nav-Com | 8-9-65 | |
| 2.37 | Wiring Diagram - Bendix ADF-T-12C | 8-30-65 | |
| 2.38.1 | W.D. -King KA-25C Audio Amplifier | 12-7-65 | |
| | DRAWING NUMBER 0700092 | | |
| 14.1 | Nav-O-Matic 200 & 300 Systems (Opt.) | 11-18-64 | A |
| 14.2 | Nav-O-Matic 400 (Opt.) | 12-23-64 | |
| 14.2.1 | Nav-O-Matic 400 (Opt.) | 12-23-64 | |

(SR4442)

| | | | |
|---|---|---|---|
| A | ADDED WIRE LENGTHS; INACTIVATED GRN, YEL GRN & YEL; ADDED DETAIL A & B. ADDED GRN, YEL, YEL WIRES (SR4839), (SR4664), (SR4665) | WJK 6-7-65 | RPS/JMM DMM |

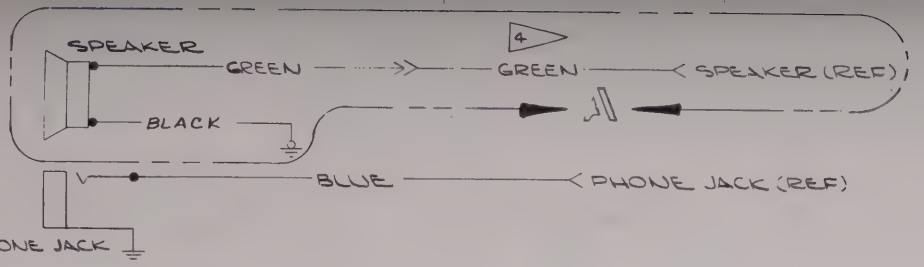


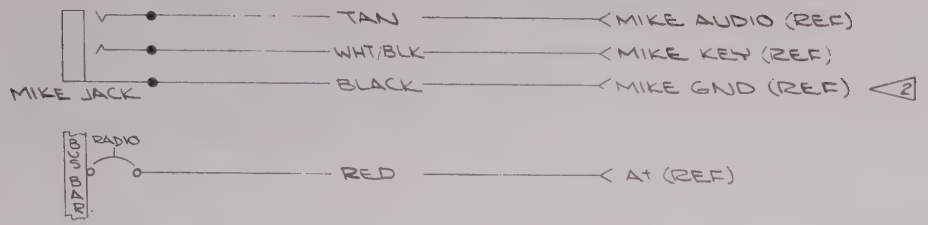


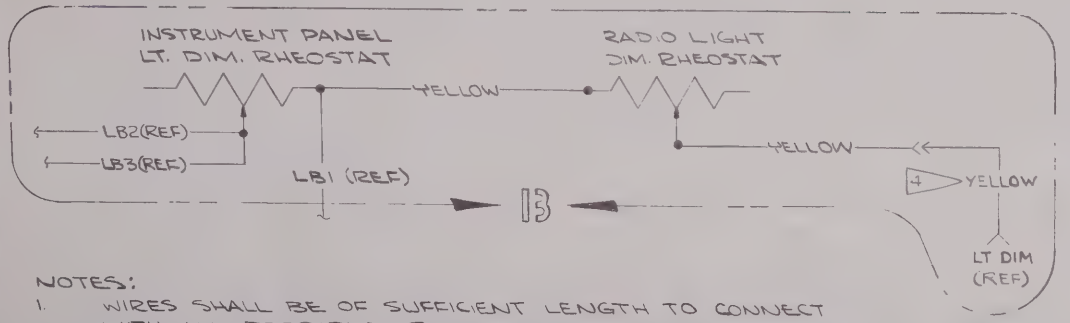


NOTES:
1. WIRES SHALL BE OF SUFFICIENT LENGTH TO CONNECT WITH ALL POSSIBLE RADIO COMBINATIONS
2. S-341-2 CONNECTOR MAY BE REPLACED BY S-1367-1-8 AS REQ'D
3. WIRE MATL PER S-1460
4. STANDARD EQUIPMENT

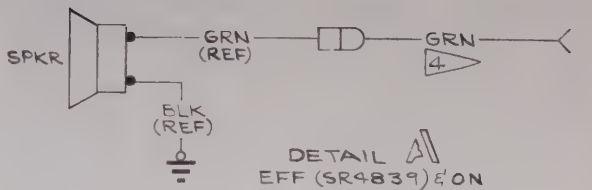


DETAIL A
EFF (SR4839) & ON

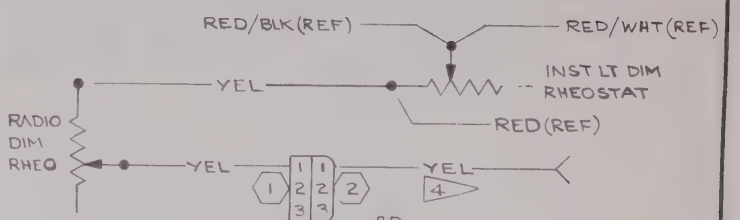


DETAIL B
EFF (SR4664), (SR4665) & ON

| WIRE CODE NO | GA | MATERIAL | LG | TERMINALS | | SERIALS |
|---|---|---|---|---|---|---|
| YELLOW | 18 | -8-4 | 145 | S-1635-2 | S-341-2 | 4 (SR4664) (SR4665) & ON |
| YELLOW | 8 | -18-4 | 12 | SOLDER | S-1635-2 | (SR4664) (SR4665) & ON |
| GREEN | 20 | -20-5 | 145 | S-341-2 | S-1635-1 S-1637-1 | 4 (SR4839) & ON |
| YELLOW | 18 | -8-4 | 145 | S-341-2 | S-341-2 | 4 INACTIVE (SR4664), (SR4665) & ON |
| BLACK | 18 | -18-0 | 9 | SOLDER | S-1367-1-10 | INACTIVE (SR4839) & ON |
| GREEN | 20 | -20-5 | 9 | | S-341-2 | INACTIVE (SR4839) & ON |
| YELLOW | 18 | 8-4 | 12 | | S-341-2 | INACTIVE (SR4664) (SR4665) & ON |
| YELLOW | 18 | -18-4 | 5 | SOLDER | SOLDER | |
| RED | 16 | -16-2 | 65 | S-1367-2-6 | S-341-1 | 1 |
| BLACK | 22 | -22-0 | 85 | SOLDER | S-341-2 | 2 |
| WHT/BLK | 22 | -22-9-0 | 85 | | S-341-2 | |
| TAN | 22 | -22-10 | 85 | | S-341-2 | |
| BLUE | 22 | -22-6 | 45 | SOLDER | S-341-2 | |
| GREEN | 20 | -20-5 | 145 | S-341-2 | S-341-2 | 4 INACTIVE (SR4839) & ON |

3 WIRE TABLE

| ITEM NO | PART NO | DESCRIPTION | INSTALLED ON |
|---|---|---|---|
| 2 | S-1638-2 | HOUSING - CAP | |
| 1 | S-1638-1 | HOUSING - PLUG | |

EQUIPMENT TABLE

CESSNA AIRCRAFT CO., COMMERCIAL AIRCRAFT DIVISION, WICHITA, KANSAS

| | NAME | DATE |
|---|---|---|
| DRAWN | JOHNSON | 11/8/64 |
| GROUP | | |
| CHECK | [illegible] | [illegible] |
| PROJ | [illegible] | 5 21 65 |

TITLE: WIRING DIAGRAM — RADIO AUDIO, POWER, & LIGHTING

Cessna.

DWG NO. 0770400

| SUPERSEDED BY | SUPERSEDES | MODEL: | REV. | PAGE |
|---|---|---|---|---|
| | | 180-185 | A | 2.0.1 |

FORM NO 80-161

(SR4441)
(SR4442)

| CHG LET | REVISION | BY DATE | CHK APPD |
|---|---|---|---|
| | | | |

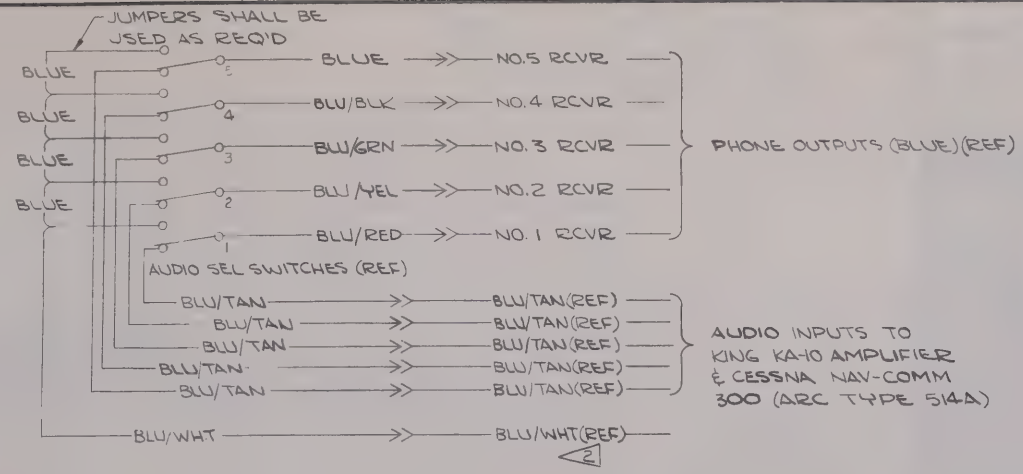


NOTES:

1. WIRE MATERIAL PER S-1460
2. FROM MUTING RELAY. REFER TO PAGE 2.0.3 FOR WIRING
3. WIRES NOT USED SHALL BE SLEEVED & TIED INTO BUNDLE

| WIRE CODE NO | GA | MATERIAL | LG | TERMINALS | | | SERIALS |
|---|---|---|---|---|---|---|---|
| BLUE | 22 | -22-6 | 2.0 | S-1367-1-6 | S-1367-1-6 | JUMPER | |
| BLUE | 22 | -22-6 | 2.0 | ↕ | ↕ | ↕ | |
| BLUE | 22 | -22-6 | 2.0 | ↕ | ↕ | ↕ | |
| BLUE | 22 | -22-6 | 2.0 | S-1367-1-6 | S-1367-1-6 | JUMPER | |
| BLUE | 22 | -22-6 | | S-1367-1-6 | S-341-2 | | |
| BLU/BLK | 22 | -22-6-0 | | ↕ | ↕ | | |
| BLU/GRN | 22 | -22-6-5 | | ↕ | ↕ | | |
| BLU/YEL | 22 | -22-6-4 | | ↕ | ↕ | | |
| BLU/RED | 22 | -22-6-2 | | ↕ | ↕ | | |
| BLU/TAN | 22 | -22-6-10 | | ↕ | ↕ | | |
| BLU/TAN | 22 | -22-6-10 | | ↕ | ↕ | | |
| BLU/TAN | 22 | -22-6-10 | | ↕ | ↕ | | |
| BLU/TAN | 22 | -22-6-10 | | ↕ | ↕ | | |
| BLU/TAN | 22 | -22-6-10 | | ↕ | ↕ | | |
| BLU/WHT | 22 | -22-6-9 | | S-1367-1-6 | S-341-2 | | |

1

WIRE TABLE

CESSNA AIRCRAFT CO. COMMERCIAL AIRCRAFT DIVISION, WICHITA, KANSAS

| | NAME | DATE |
|---|---|---|
| DRAWN | JOHNSON | 1/8/64 |
| GROUP | | |
| CHECK | R Stuck | 3-26-64 |
| PROJ | JR Sattler | 5-21-64 |

TITLE: WIRING DIAGRAM — AUDIO SELECTOR SWITCHING

Cessna.

OWG NO 0770400

| PART NO | DESCRIPTION | INSTALLED ON |
|---|---|---|
| | | |

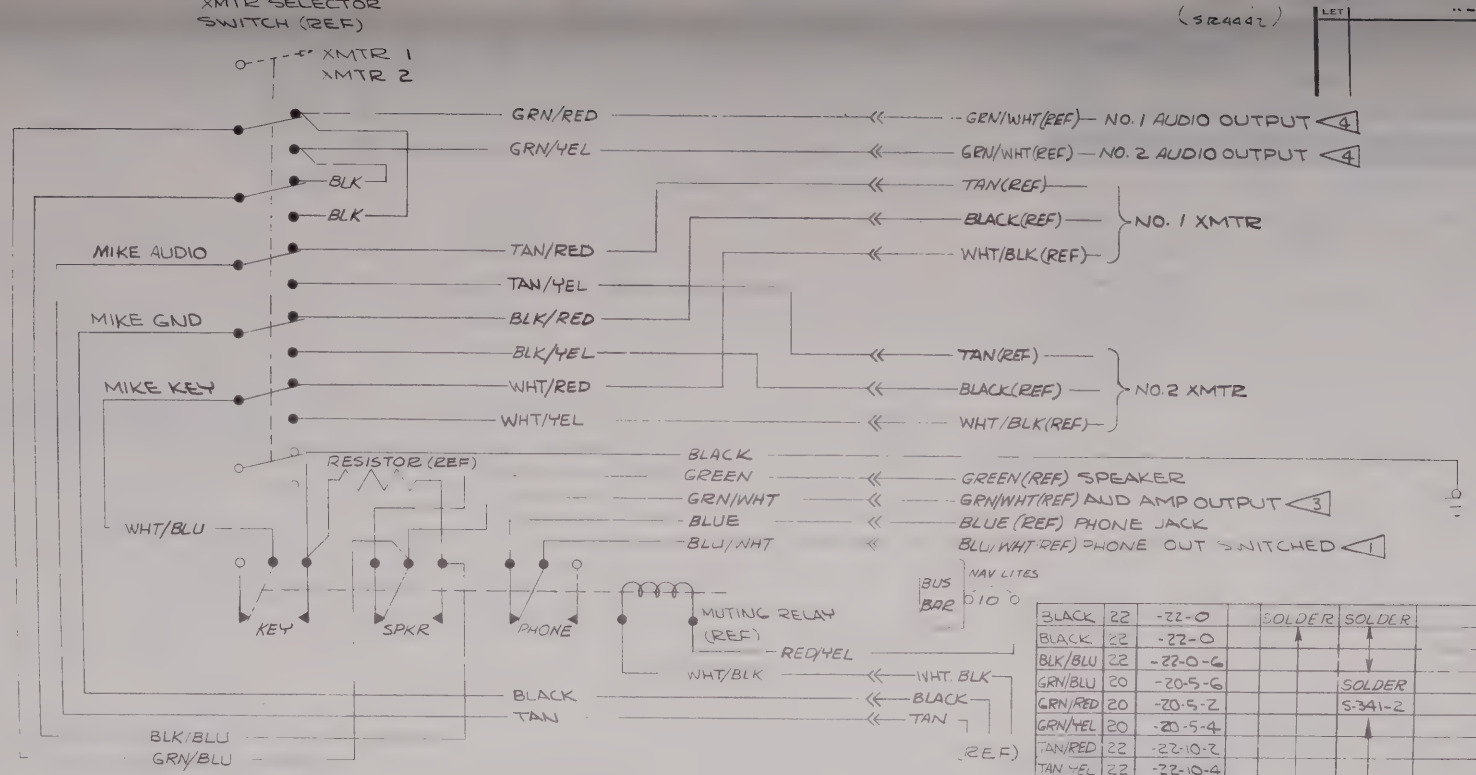


| LET | REVISION | DATE | APPD |
|---|---|---|---|
| | (SR4442) | | |

| WIRE CODE NO | GA | MATERIAL | LG | TERMINALS | | SERIALS |
|---|---|---|---|---|---|---|
| BLACK | 22 | -22-0 | | SOLDER | SOLDER | |
| BLACK | 22 | -22-0 | | | | |
| BLK/BLU | 22 | -22-0-6 | | | | |
| GRN/BLU | 20 | -20-5-6 | | | SOLDER | |
| GRN/RED | 20 | -20-5-2 | | | S-341-2 | |
| GRN/YEL | 20 | -20-5-4 | | | | |
| TAN/RED | 22 | -22-10-2 | | | | |
| TAN YEL | 22 | -22-10-4 | | | | |
| BLK/RED | 22 | -22-0-2 | | | | |
| BLK/YEL | 22 | -22-0-4 | | | | |
| WHT/RED | 22 | -22-9-2 | | | | |
| WHT/YEL | 22 | -22-9-4 | | | S-341-2 | |
| WHT/BLU | 22 | -22-9-6 | | | SOLDER | |
| BLACK | _ | -22-0 | | | S-1367-1-10 | |
| GREEN | 20 | -20-5 | | | S-341-2 | |
| GRN/WHT | 20 | -20-5-9 | | | S-341-2 | |
| BLUE | 22 | -22-6 | | | S-341-2 | |
| BLU/WHT | 22 | -22-6-9 | | | S-341-2 | |
| RED/YEL | 22 | -22-2-4 | | | S-1367-1-6 | |
| WHT/BLK | 22 | -22-9-0 | | | S-341-2 | |
| BLACK | 22 | -22-0 | | | S-341-2 | |
| TAN | 22 | -22-10 | | SOLDER | S-341-2 | |

6 WIRE TABLE

NOTES:

1. REFER TO PAGE 2.0.2 FOR AUDIO SELECTOR SWITCH WIRING.
2. SPEAKER OUTPUTS NOT USED SHALL BE GROUNDED THROUGH A 5 OHM, 5 WATT RESISTOR
3. GRN/WHT USED WHEN ONLY ONE AUDIO ISOLATION AMPLIFIER IS AVAILABLE
4. GRN/RED & GRN/YEL USED ONLY WHEN TWO AUDIO ISOLATION AMPLIFIERS ARE AVAILABLE
5. WIRES NOT USED SHALL BE SLEEVED & TIED INTO BUNDLE
6. WIRE MATERIAL PER S-1460

| ITEM NO | PART NO | DESCRIPTION | INSTALLED ON |
|---|---|---|---|
| | | | |

EQUIPMENT TABLE

CESSNA AIRCRAFT CO. COMMERCIAL AIRCRAFT DIVISION, WICHITA, KANSAS

| | NAME | DATE |
|---|---|---|
| DRAWN | JOHNSON | 1/6/64 |
| GROUP | | |
| CHECK | | 1-16-64 |
| PROJ | R Settle | 5-21-64 |

TITLE: WIRING DIAGRAM — TRANSMITTER SELECTOR SWITCHING

Cessna.

DWG NO 0770400

| SUPERSEDED BY | SUPERSEDES | MODEL | REV | PAGE |
|---|---|---|---|---|
| | | 180-185 | | 2.0.3 |

FORM NO 80-161

(SR4441)
(SR4442)

| CHG LET | REVISION | BY DATE | CHK APPD |
|---|---|---|---|
| | | | |

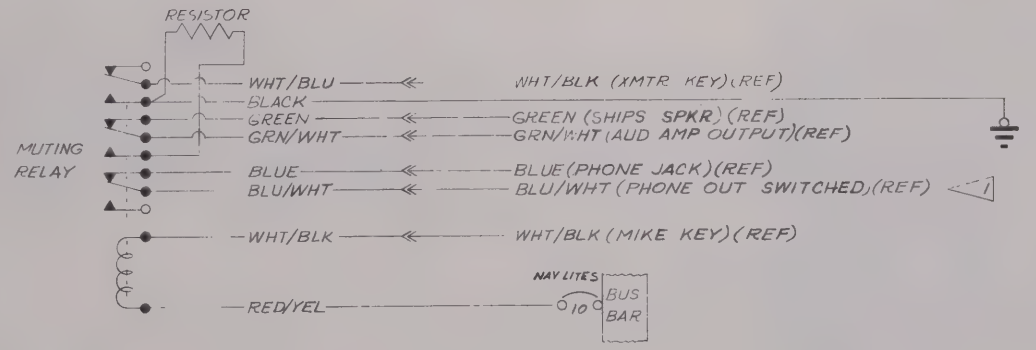


NOTES:
1. REFER TO PAGE 2.0.2 FOR AUDIO SELECTOR SWITCH WIRING.
2. WIRE MATERIAL PER S-1460.
3. SPEAKER OUTPUTS VCT USED SHALL BE GROUNDED THROUGH A 5 OHM 5 WATT RESISTOR.

| WIRE CODE NO | GA | MATERIAL | TERMINALS | |
|---|---|---|---|---|
| BLACK | 22 | -22-0 | SOLDER | S-1367-1-1 |
| WHT/BLU | 22 | -22-9 6 | S-141-2 | |
| GREEN | 20 | -20-5 | | |
| GRN/WHT | 20 | -20-5-9 | | |
| BLUE | 22 | -22-6 | | |
| BLU/WHT | 22 | -22-6 9 | | |
| WHT/BLK | 22 | -22-9-0 | | |
| RED/YEL | 22 | -22-7 4 | SOLDER | S-1367-1-6 |

WIRE TABLE

CESSNA AIRCRAFT CO., COMMERCIAL AIRCRAFT DIVISION, WICHITA, KANSAS

| | NAME | DATE |
|---|---|---|
| DRAWN | SPRIGGS | 2-6-64 |
| GROUP | | |
| CHECK | R Stucki | 3-27-64 |
| PROJ | [illegible] | 5-21-64 |

WIRING DIAGRAM — MUTING RELAY

Cessna

WIRING NO. 3770400

| PART NO | DESCRIPTION | INSTALLATION |
|---|---|---|

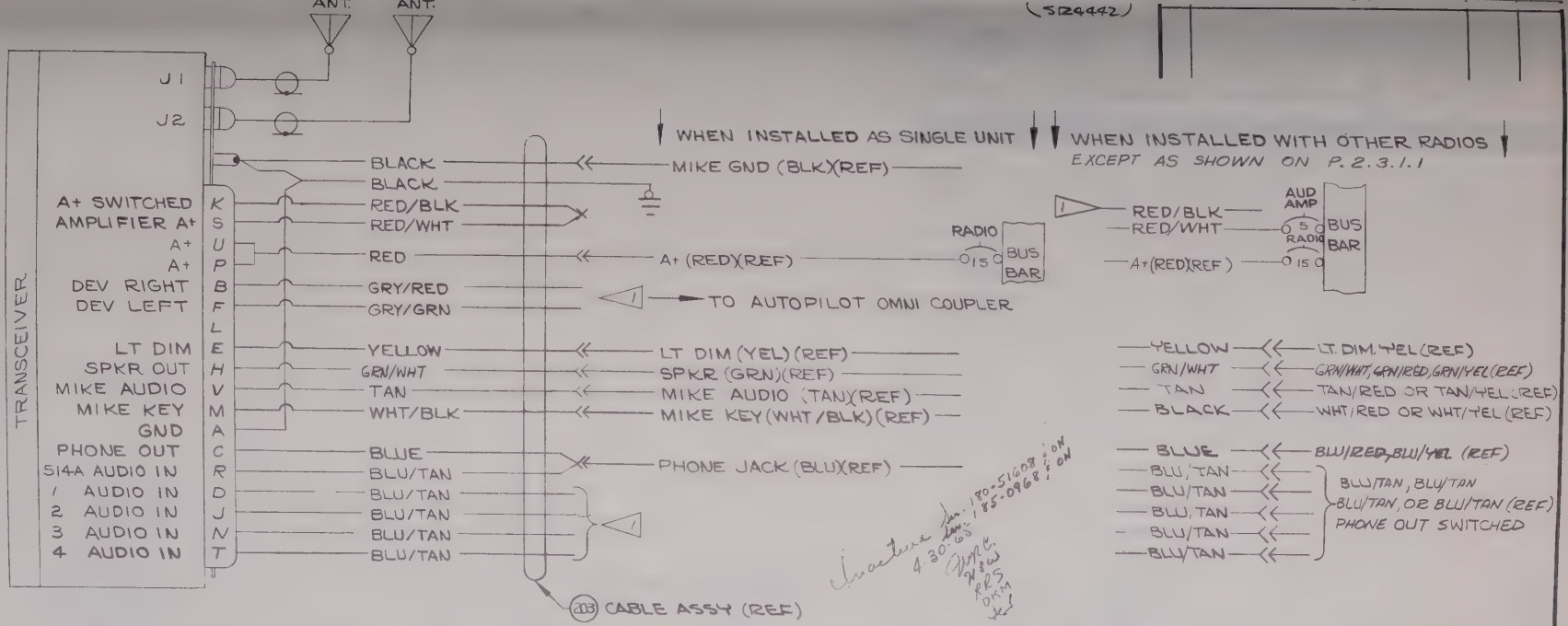


NOTES:
1. WIRES NOT USED SHALL BE SLEEVED AND TIED INTO BUNDLE
2. WIRE MATERIAL PER S-1460

| WIRE CODE NO. | GA | MATERIAL | LG | TERMINALS | | | SERIALS |
|---|---|---|---|---|---|---|---|
| BLU/TAN | 22 | -22-6-10 | | SOLDER | | | |
| BLU/TAN | 22 | -22-6-10 | | | | | |
| BLU/TAN | 22 | -22-6-10 | | | | | |
| GRY/GRN | 22 | -22-8-5 | | | | | |
| GRY/RED | 22 | -22-8-2 | | | | | |
| BLU/TAN | 22 | -22-6-10 | | | | | |
| BLU/TAN | 22 | -22-6-10 | | | COMMON TO BLUE | | |
| BLUE | 22 | -22-6 | | | S-341-1 | | |
| BLACK | 22 | -22-0 | | | S-341-2 | | |
| WHT/BLK | 22 | -22-9-0 | | | S-341-2 | | |
| TAN | 22 | -22-10 | | | S-341-2 | | |
| GRN/WHT | 20 | -20-5-9 | | | S-341-2 | | |
| YELLOW | 18 | -18-4 | | | S-341-2 | | |
| RED | 16 | -16-2 | | | S-341-1 | | |
| RED/WHT | 18 | -18-2-9 | | | COMMON TO RED/BLK | | |
| RED/BLK | 18 | -18-2-0 | | | S-1370-1 | | |
| BLACK | 16 | -16-0 | | SOLDER | S-1367-2-10 | | |

2 WIRE TABLE

CESSNA AIRCRAFT CO. COMMERCIAL AIRCRAFT DIVISION WICHITA, KANSAS

| | NAME | DATE |
|---|---|---|
| DRAWN | Johnson | 1/8/64 |
| GROUP | | |
| CHECK | R. Stuck | 3-26-64 |
| PROJ | R. Settle | 5-21-64 |

TITLE: WIRING DIAGRAM — CESSNA NAV-COMM 300 (ARC TYPE 514A)

Cessna.

DWG NO. 0770400

| ITEM NO | PART NO. | DESCRIPTION | INSTALLED ON |
|---|---|---|---|

EQUIPMENT TABLE

SUPERSEDED BY: PG 0770400 2.34.1 | SUPERSEDES 0700092 | MODEL: 180-185 | REV. | PAGE: 2.3.1

FORM NO. 80-161

| CHG LET | REVISION | BY / DATE | CHK / APPD |
|---|---|---|---|
| | | | |

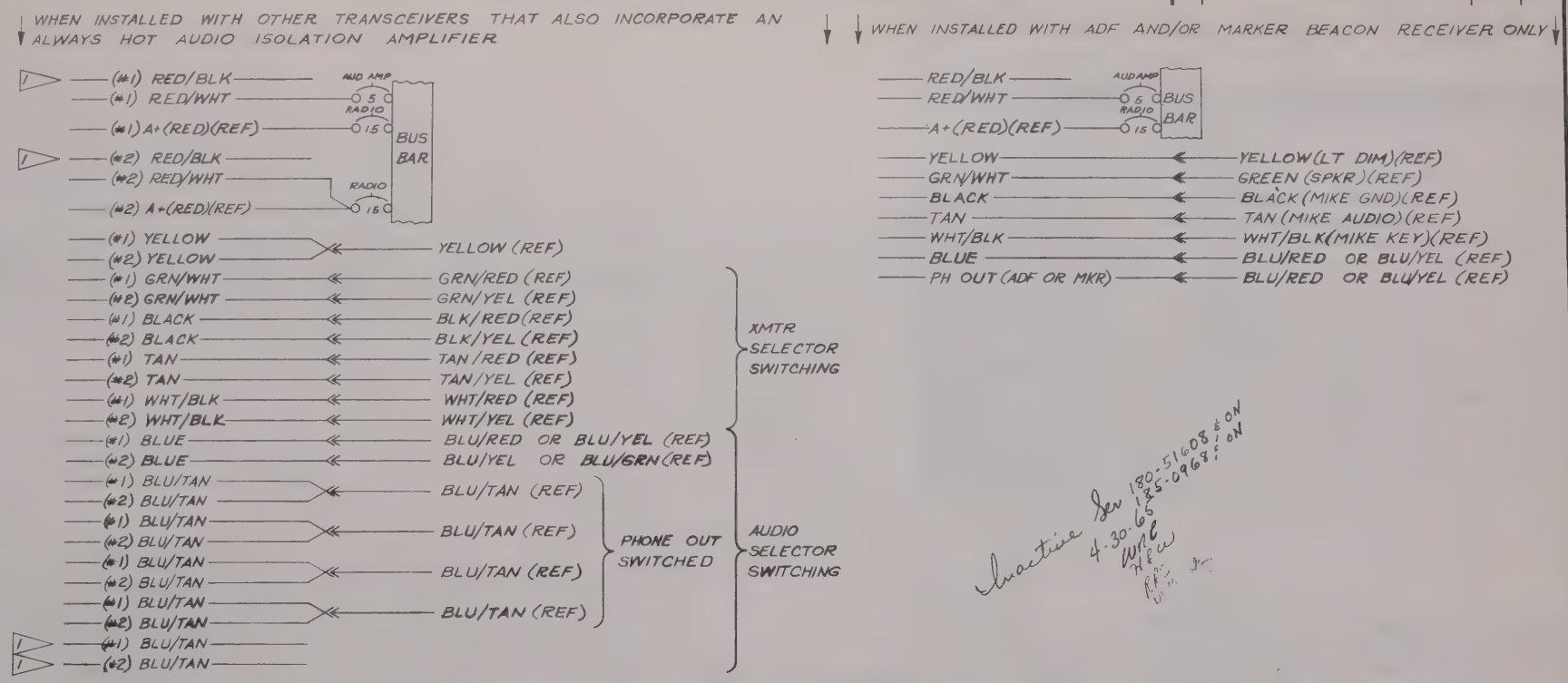


Inactive Ser 180-51608 & ON
185-0968 & ON
4-30-65
WRC
HRW

| WIRE CODE NO. | GA | MATERIAL | LG | TERMINALS | | SERIALS |
|---|---|---|---|---|---|---|
| | | | | | | |

WIRE TABLE

CESSNA AIRCRAFT CO. COMMERCIAL AIRCRAFT DIVISION WICHITA KANSAS

| | NAME | DATE |
|---|---|---|
| DRAWN | SPRIGGS | 3-25-64 |
| GROUP | | |
| CHECK | [illegible] | 3-26-64 |
| PROJ | [illegible] | 3-25-64 |

TITLE
WIRING DIAGRAM — CESSNA NAV-COMM 300 (ARC TYPE 514A)

Cessna.

DWG NO. 0770400

| PART NO. | DESCRIPTION | INSTALLED ON |
|---|---|---|
| | | |

(SR4442)

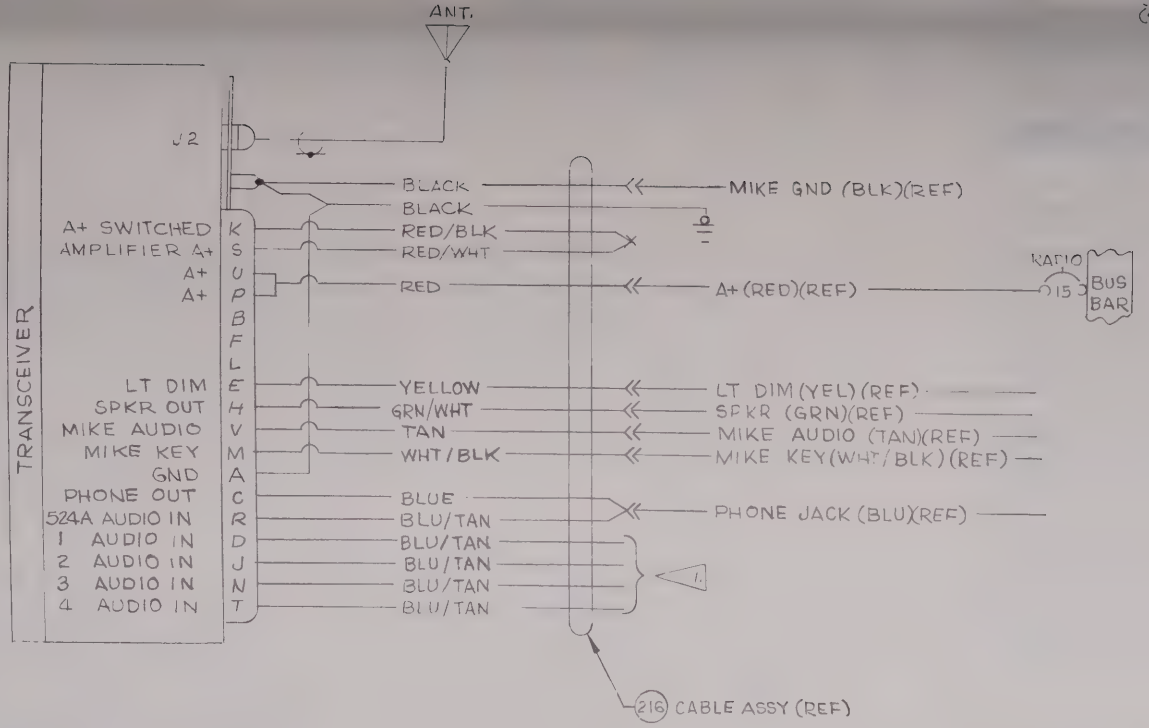


| WIRE CODE NO | GA | MATERIAL | LG | TERMINALS | | SERIALS |
|---|---|---|---|---|---|---|
| BLU/TAN | 22 | -22-6-10 | | SOLDER | | |
| BLU/TAN | 22 | -22-6-10 | | | | |
| BLU/TAN | 22 | -22-6-10 | | | | |
| BLU/TAN | 22 | -22-6-10 | | | | |
| BLU/TAN | 22 | -22-6-10 | | | COMMON TO BLUE | |
| [illegible] | 22 | -22-6 | | | S-341-1 | |
| BLACK | 22 | 22 [illegible] | | | S-341-2 | |
| WHT/BLK | 22 | -22-9-0 | | | S-341-2 | |
| TAN | 22 | -22-10 | | | S-341-2 | |
| GRN/WHT | 20 | 20-5-9 | | | S-341-2 | |
| YELLOW | 18 | -18-4 | | | S-341-2 | |
| RED | 16 | -16-2 | | | S-341-1 | |
| RED/WHT | 18 | -18-2-9 | | | COMMON TO RED/BLK | |
| RED/BLK | 18 | -18-2-0 | | | S-1370-1 | |
| BLACK | 16 | -16-0 | | SOLDER | S 1367-210 | |

3 WIRE TABLE

NOTES;
1. WIRES NOT USED SHALL BE SLEEVED AND TIED INTO BUNDLE.
2. WIRING SHOWN IS FOR SINGLE INSTALLATION. SEE PAGES 2.3.1.0 AND 2.3.1.1. FOR WIRING ON MULTIPLE INSTALLATIONS,
3. WIRE MATERIAL PER S-1460.

| ITEM NO | PART NO | DESCRIPTION | INSTALLED ON |
|---|---|---|---|

EQUIPMENT TABLE

CESSNA AIRCRAFT CO., COMMERCIAL AIRCRAFT DIVISION, WICHITA, KANSAS

| | NAME | DATE |
|---|---|---|
| DRAWN | COOK | 7-17-64 |
| GROUP | W Tapparel | 8-3-64 |
| CHECK | [illegible] | 7-17-64 |
| PROJ | [illegible] | 8-4-64 |

TITLE: WIRING DIAGRAM — CESSNA COMM 300 (ARC TYPE 524 A)

Cessna.

DWG NO. 0770400

| SUPERSEDED BY | SUPERSEDES | MODEL | REV | PAGE |
|---|---|---|---|---|
| | | 180-185 | | 2.3.2 |

FORM NO. 80-161

(S24441
S24442)

| CHG LET | REVISION | BY DATE | CHK APPD |
|---|---|---|---|
| | | | |

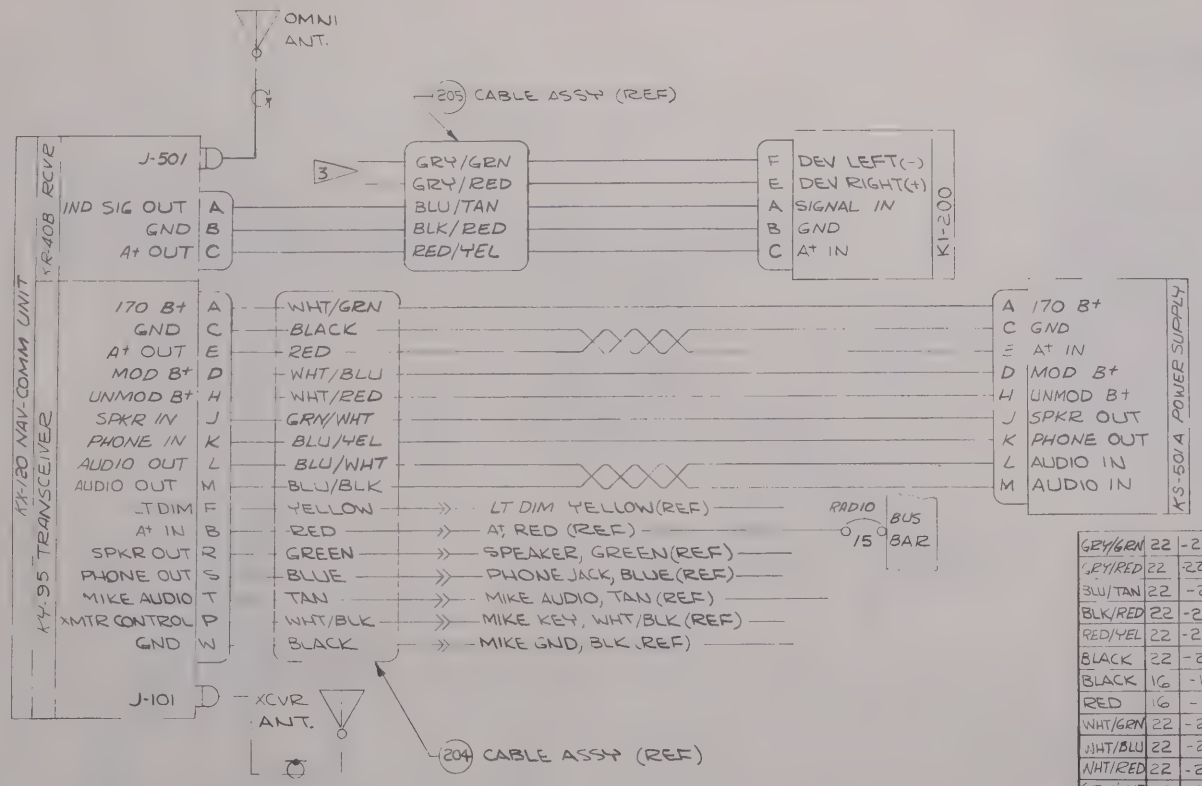


NOTES:

1. WIRING SHOWN IS FOR SINGLE INSTALLATION SEE PAGES 2.0.2 & 2.0.3 FOR WIRING CHANGES WHEN INSTALLED WITH OTHER UNITS.
2. WIRE MATERIAL PER S-1460.
3. WIRES NOT USED SHALL BE SLEEVED & TIED INTO BUNDLE

| WIRE CODE NO. | GA | MATERIAL | LG | TERMINALS | | SERIALS |
|---|---|---|---|---|---|---|
| GRY/GRN | 22 | -22-8-5 | | SOLDER | | |
| GRY/RED | 22 | -22-8-2 | | | | |
| BLU/TAN | 22 | -22-6-10 | | | SOLDER | |
| BLK/RED | 22 | -22-0-2 | | | | |
| RED/YEL | 22 | -22-2-4 | | SOLDER | | |
| BLACK | 22 | -22-0 | | S-341-2 | | |
| BLACK | 16 | -16-0 | | SOLDER | | |
| RED | 16 | -16-2 | | | | |
| WHT/GRN | 22 | -22-9-5 | | | | |
| WHT/BLU | 22 | -22-9-6 | | | | |
| WHT/RED | 22 | -22-9-2 | | | | |
| GRN/WHT | 20 | -20-5-9 | | | | |
| BLU/YEL | 22 | -22-6-4 | | | | |
| BLU/WHT | 22 | -22-6-9 | | | | |
| BLU/BLK | 22 | -22-6-0 | | SOLDER | | |
| YELLOW | 18 | 18-4 | | S-341-2 | | |
| RED | 16 | -16-2 | | S-341-1 | | |
| GREEN | 20 | -20-5 | | S-341-2 | | |
| BLUE | 22 | -22-6 | | S-341-2 | | |
| TAN | 22 | -22-10 | | S-341-2 | | |
| WHT/BLK | 22 | -22-9-0 | | S-341-2 | SOLDER | |

2 WIRE TABLE

| PART NO | DESCRIPTION | INSTALLED ON |
|---|---|---|

CESSNA AIRCRAFT CO. COMMERCIAL AIRCRAFT DIVISION, WICHITA, KANSAS

| | NAME | DATE |
|---|---|---|
| DRAWN | JOHNSON | 1/8/64 |
| GROUP | | |
| CHECK | [illegible] | 3-26-64 |
| PROJ | [illegible] | 5-21-64 |

TITLE: WIRING DIAGRAM — KING KY-95 & KX-120

Cessna.

DWG NO 0770400

(SR4442)

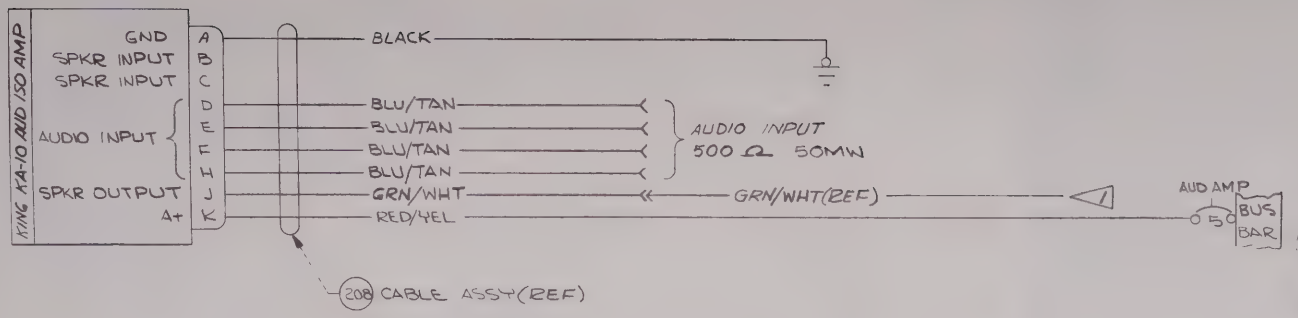


Inactive (EARLY 1966 MODELS & ON)
See (SR 4938) & ON
10-26-65
11-12-65

NOTES:
1. TO MUTING RELAY. REFER TO PAGE 2.0.3 FOR WIRING.
2. WIRE MATERIAL PER S-1460
3. WIRES NOT USED SHALL BE SLEEVED & TIED INTO BUNDLE.

| WIRE CODE NO. | GA | MATERIAL | LG | TERMINALS | | | SERIALS |
|---|---|---|---|---|---|---|---|
| BLACK | 22 | -22-0 | | SOLDER | S-1367-1-10 | | |
| BLU/TAN | 22 | -22-6-10 | | | S-341-2 | | |
| BLU/TAN | 22 | -22-6-10 | | | S-341-2 | | |
| BLU/TAN | 22 | -22-6-10 | | | S-341-2 | | |
| BLU/TAN | 22 | -22-6-10 | | | S-341-2 | | |
| GRN/WHT | 20 | -20-5-9 | | | S-341-2 | | |
| RED/YEL | 22 | -22-2-4 | | SOLDER | S-1367-1-6 | | |

2 WIRE TABLE

CESSNA AIRCRAFT CO. COMMERCIAL AIRCRAFT DIVISION, WICHITA, KANSAS

| | NAME | DATE |
|---|---|---|
| DRAWN | JOHNSON | 1/8/64 |
| GROUP | | |
| CHECK | R. Stuck | 3-26-64 |
| PROJ | [illegible] | 5-21-64 |

TITLE: WIRING DIAGRAM — KING KA-10 AUDIO ISOLATION AMPLIFIER

Cessna.

DWG NO. 0770400

SUPERSEDED BY 0770400.PP2.38.1 | SUPERSEDES | MODEL 180-185 | REV. | PAGE: 2.7.1

| ITEM NO | PART NO. | DESCRIPTION | INSTALLED ON |
|---|---|---|---|

EQUIPMENT TABLE

FORM NO. 80-161

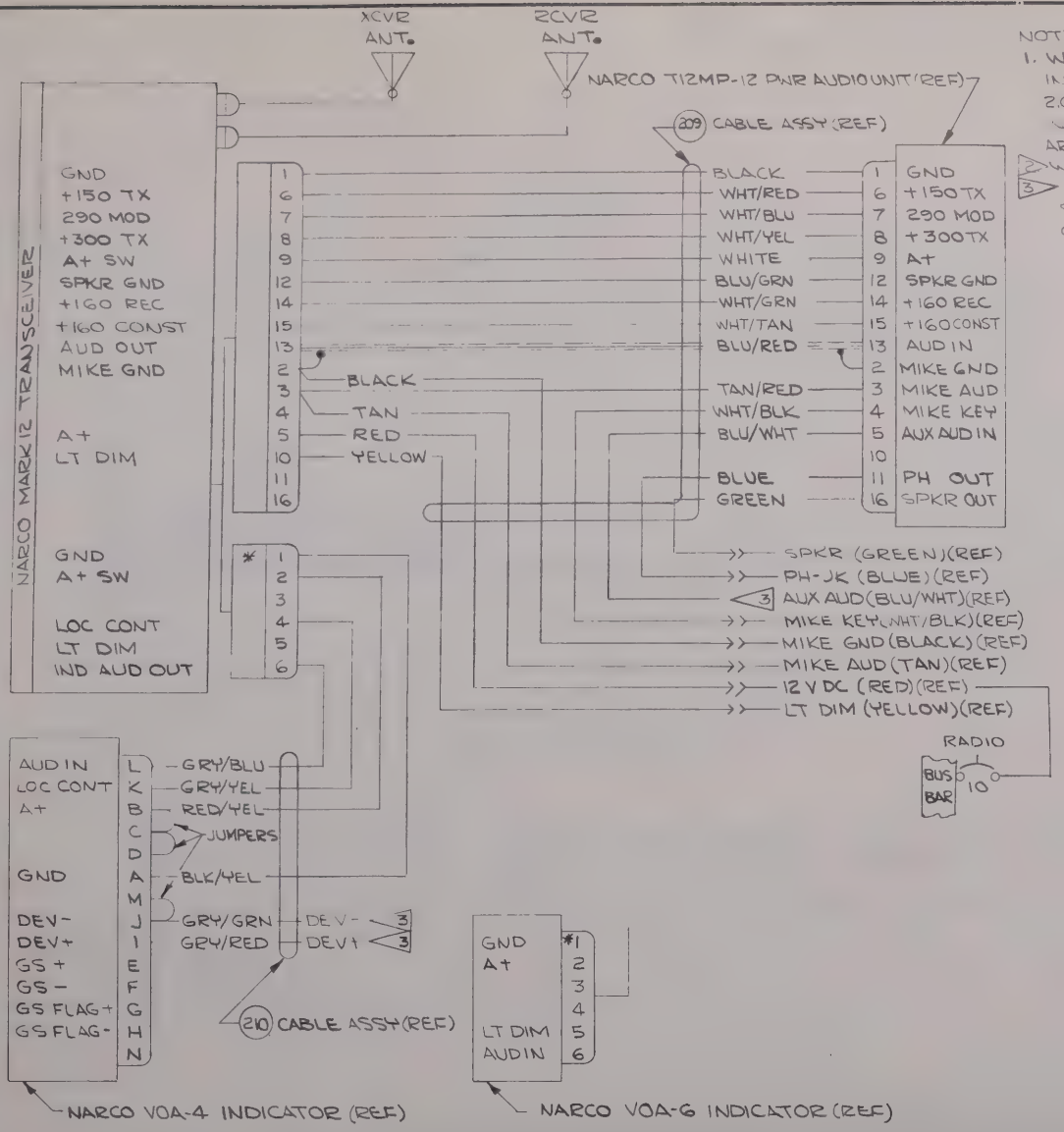


(3R4491 3R4492)

NOTES:

1. WIRING SHOWN IS FOR SINGLE INSTL. SEE PAGES 2.0.2 & 2.0.3 FOR WIRING CHANGES WHEN ADDITIONAL RADIOS ARE INSTALLED.
2. WIRE MATL PER S-1460 & NOTED
3. END OF WIRE SHALL BE SLEEVED & TIED INTO CABLE UNTIL USED

| CHG LET | REVISION | BY DATE | CHK APPD |
|---|---|---|---|
| | | | |

| WIRE CODE NO. | GA | MATERIAL | LG | TERMINALS | | SERIALS |
|---|---|---|---|---|---|---|
| GREEN | 20 | -20-5 | | SOLDER | S-341-2 | |
| GRY/BLU | 22 | -22-8-6 | | | SOLDER | |
| GRY/YEL | 22 | -22-8-4 | | | SOLDER | |
| GRY/GRN | 22 | -22-8-5 | | | | |
| GRY/RED | 22 | -22-8-2 | | | | |
| RED/YEL | 22 | -22-2-4 | | | SOLDER | |
| BLK/YEL | 22 | -22-0-4 | | | SOLDER | |
| BLACK | 22 | -22-0 | | | S-341-2 | |
| TAN | 22 | -22-10 | | | S-341-2 | |
| WHT/TAN | 22 | -22-9-10 | | | SOLDER | |
| WHT/GRN | 22 | -22-9-5 | | | | |
| BLU/RED | 22 | S14612206-2 | | | | |
| BLU/GRN | 22 | -22-6-5 | | | SOLDER | |
| BLUE | 22 | -22-6 | | | S-341-2 | |
| WHT/YEL | 22 | -22-9-4 | | | SOLDER | |
| WHT/BLU | 22 | -22-9-6 | | | SOLDER | |
| WHT/RED | 22 | -22-9-2 | | | SOLDER | |
| BLU/WHT | 22 | -22-6-9 | | | | |
| WHT/BLK | 22 | -22-9-0 | | | S-341-2 | |
| TAN/RED | 22 | -22-10-2 | | | SOLDER | |
| YELLOW | 18 | -18-4 | | | S-341-2 | |
| RED | 16 | -16-2 | | | S-341-1 | |
| BLACK | 16 | -16-0 | | | SOLDER | |
| WHITE | 4 | | | SOLDER | SOLDER | |

2 WIRE TABLE

| PART NO | DESCRIPTION | INSTALLED ON |
|---|---|---|

CESSNA AIRCRAFT CO., COMMERCIAL AIRCRAFT DIVISION, WICHITA, KANSAS

| | NAME | DATE |
|---|---|---|
| DRAWN | JOHNSON | 1/8/69 |
| GROUP | | |
| CHECK | R. Strickland | 3-26-69 |
| PROJ | R. Little | 5-21-69 |

TITLE: WIRING DIAGRAM — NARCO MARK 12

Cessna.

DWG NO 0770400

| | | | |
|---|---|---|---|
| A | KING KX-150B & KX-150BE NAS KX-150A & KX-150AE ADD NOTE 4. (SR4731) | GLW 1-23-65 | DWM 1KU |

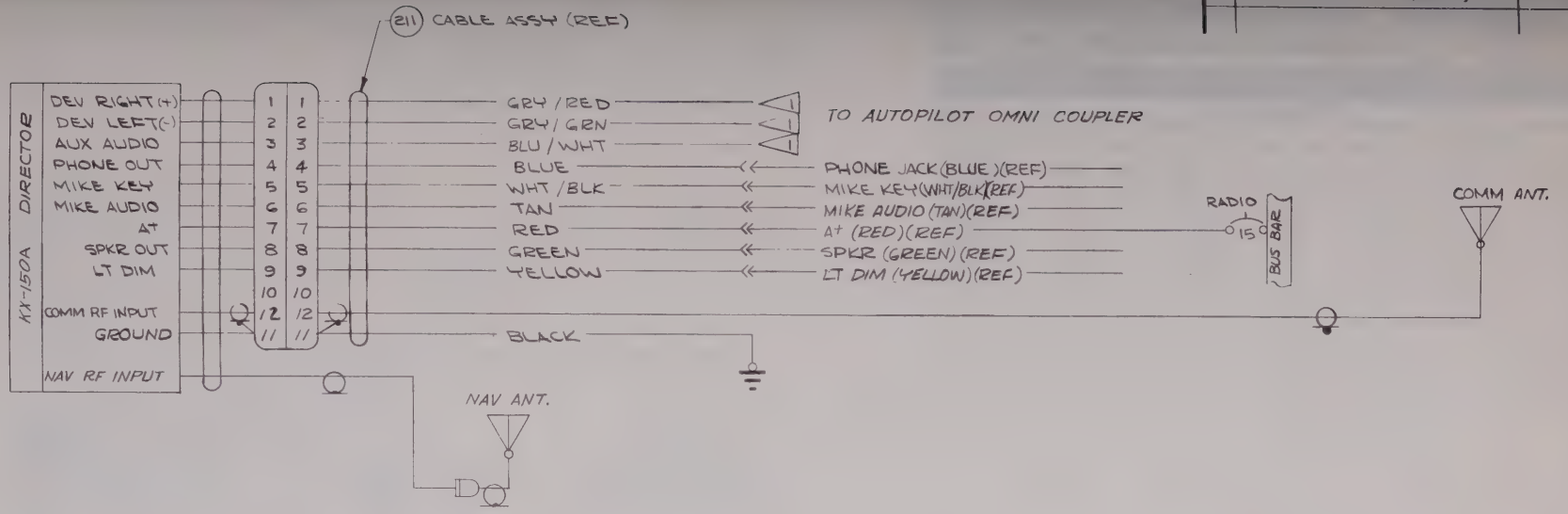


NOTES:

1. SLEEVE & TIE INTO BUNDLE UNTIL USED.
2. WIRING SHOWN IS FOR SINGLE INSTALLATION. SEE PAGES 2.0.2 & 2.0.3 FOR WIRING CHANGES WHEN INSTALLED WITH OTHER UNITS.
3. WIRE MATL PER S-1460
4. THE KING KX-150B & KX-150BE ARE ELECTRICALLY & MECHANICALLY INTERCHANGEABLE WITH KX-150A & KX-150AE.

| WIRE CODE NO. | GA | MATERIAL | LG | TERMINALS | | | SERIALS |
|---|---|---|---|---|---|---|---|
| GRY/RED | 22 | -22-8-2 | | SOLDER | | | |
| GRY/GRN | 22 | -22-8-5 | | | | | |
| BLU/WHT | 22 | -22-6-9 | | | | | |
| BLACK | 16 | -16-0 | | | S-1367-2-10 | | |
| RED | 16 | -16-2 | | | S-341-1 | | |
| YELLOW | 18 | -18-4 | | | S-341-2 | | |
| WHT/BLK | 22 | -22-9-0 | | | S-341-2 | | |
| TAN | 22 | -22-10 | | | S-341-2 | | |
| GREEN | 20 | -20-5 | | | S-341-2 | | |
| BLUE | 22 | -22-6 | | SOLDER | S-341-2 | | |

3 WIRE TABLE

| ITEM NO | PART NO | DESCRIPTION | INSTALLED ON |
|---|---|---|---|
| | | EQUIPMENT TABLE | |

CESSNA AIRCRAFT CO. COMMERCIAL AIRCRAFT DIVISION WICHITA, KANSAS

| | NAME | DATE |
|---|---|---|
| DRAWN | JOHNSON | 1/8/69 |
| GROUP | | |
| CHECK | R. Stuck | 3-26-64 |
| PROJ | [illegible] | 5-21-64 |

TITLE: WIRING DIAGRAM — KING KX-150B & KX-150BE

Cessna.

DWG NO 0770400

| SUPERSEDED BY | SUPERSEDES | MODEL 180-185 | REV. A | PAGE: 2.9.1 |
|---|---|---|---|---|

FORM NO. 80-161

NOTES: (SR4441 SR4442)

1. WIRING SHOWN IS FOR SINGLE INSTALLATION. SEE PAGES 2.0.2 & 2.0.3 FOR CHANGES WHEN INSTALLED WITH OTHER UNITS.

2 VENDOR SUPPLIED WIRES.

| CHG LET | REVISION | BY / DATE | CHK / APPD |
|---|---|---|---|
| | | | |

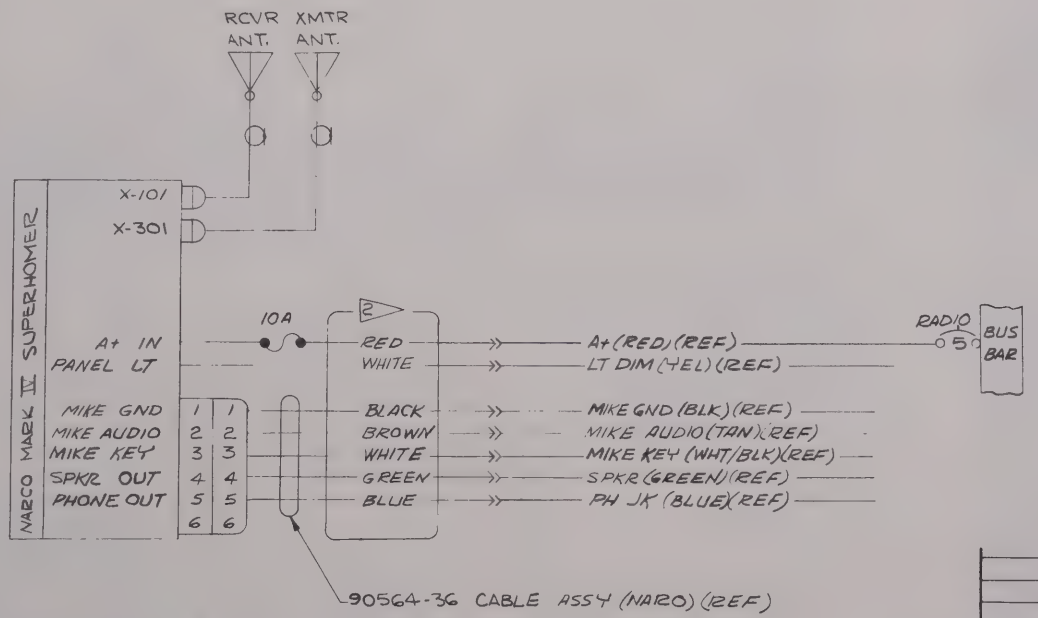


| WIRE CODE NO. | GA | MATERIAL | LG | TERMINALS | | SERIALS |
|---|---|---|---|---|---|---|
| RED | | 2 | | S-341-2 | | |
| WHITE | | | | | | |
| BLACK | | | | | | |
| BROWN | | | | | | |
| WHITE | | | | | | |
| GREEN | | | | | | |
| BLUE | | 2 | | S-341-2 | | |

WIRE TABLE

CESSNA AIRCRAFT CO. COMMERCIAL AIRCRAFT DIVISION, WICHITA, KANSAS

| | NAME | DATE |
|---|---|---|
| DRAWN | JOHNSON | 1/8/64 |
| GROUP | | |
| CHECK | R. Stuck | 1-10-64 |
| PROJ | [illegible] | 5-21-64 |

TITLE: WIRING DIAGRAM — NARCO MARK IV SUPERHOMER

Cessna.

DWG NO 0770499

(SR 4442)

| | | | |
|---|---|---|---|
| A | ADDED CHOKE IN A+ LINE & NOTE 1. | SKH 9-10-65 | |

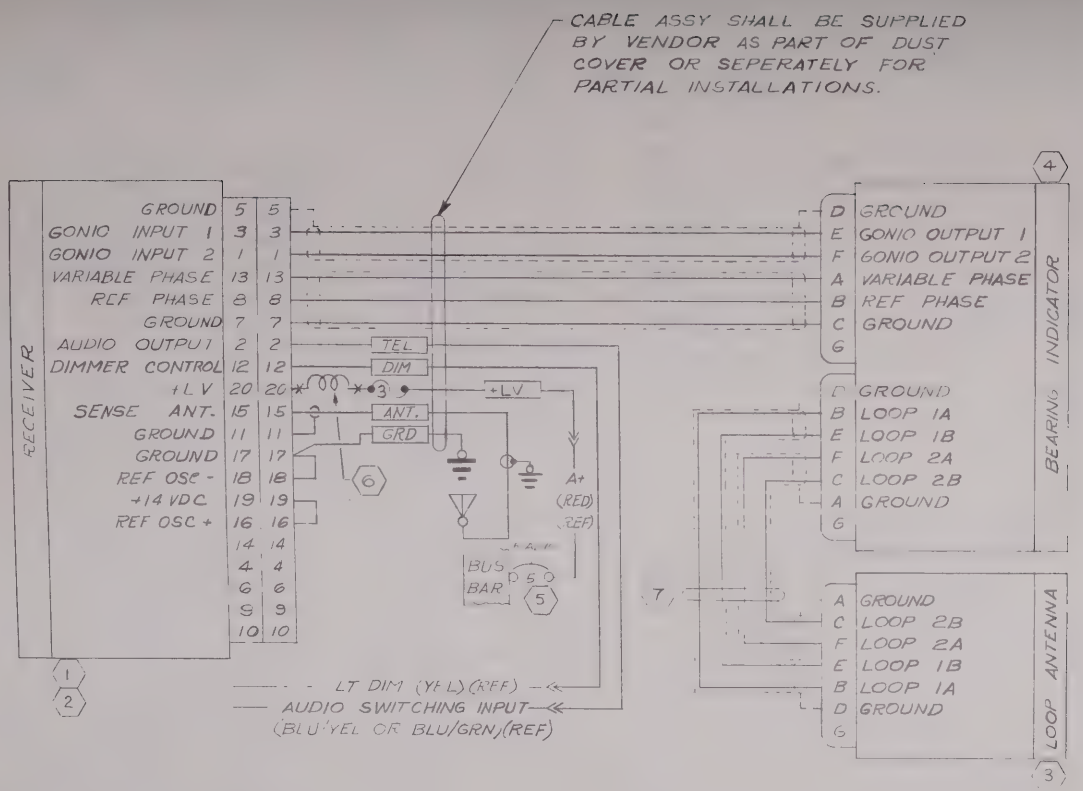


NOTES:

1. CHOKE IN A+ LINE MUST BE ADDED ON INSTL IN ACFT.

| ITEM NO | PART NO | DESCRIPTION | INSTALLED ON |
|---|---|---|---|
| 7 | 33827 | LOOP CABLE (ARC) | |
| 6 | A-263 | CHOKE (CTAT) | |
| 5 | S-1360-5 | CKT BKR | |
| 4 | 32680-0000 | INDICATOR (ARC) | IN-521B |
| 3 | 32880-0100 | LOOP (ARC) | L-521B-10 |
| 2 | 28340-1400 | RCVR (WITH BFO) | ARC 521A-14 |
| 1 | 28340-1500 | RCVR (WITHOUT BFO) | ARC 521A-15 |

EQUIPMENT TABLE

| WIRE CODE NO | GA | MATERIAL | LG | TERMINALS | | SERIALS |
|---|---|---|---|---|---|---|

WIRE TABLE

CESSNA AIRCRAFT CO. COMMERCIAL AIRCRAFT DIVISION, WICHITA, KANSAS

| | NAME | DATE |
|---|---|---|
| DRAWN | SPRIGGS | 6-22-64 |
| GROUP | V. Tennant | 7-7-64 |
| CHECK | | |
| PROJ | J.K. Sutton | 7-7-64 |

TITLE: WIRING DIAGRAM — CESSNA ADF 300 (ARC TYPE 521B)

Cessna.

DWG NO. 0770400

SUPERSEDED BY | SUPERSEDES | MODEL 180, 185 | REV A | PAGE 2.11

FORM NO. 80-161

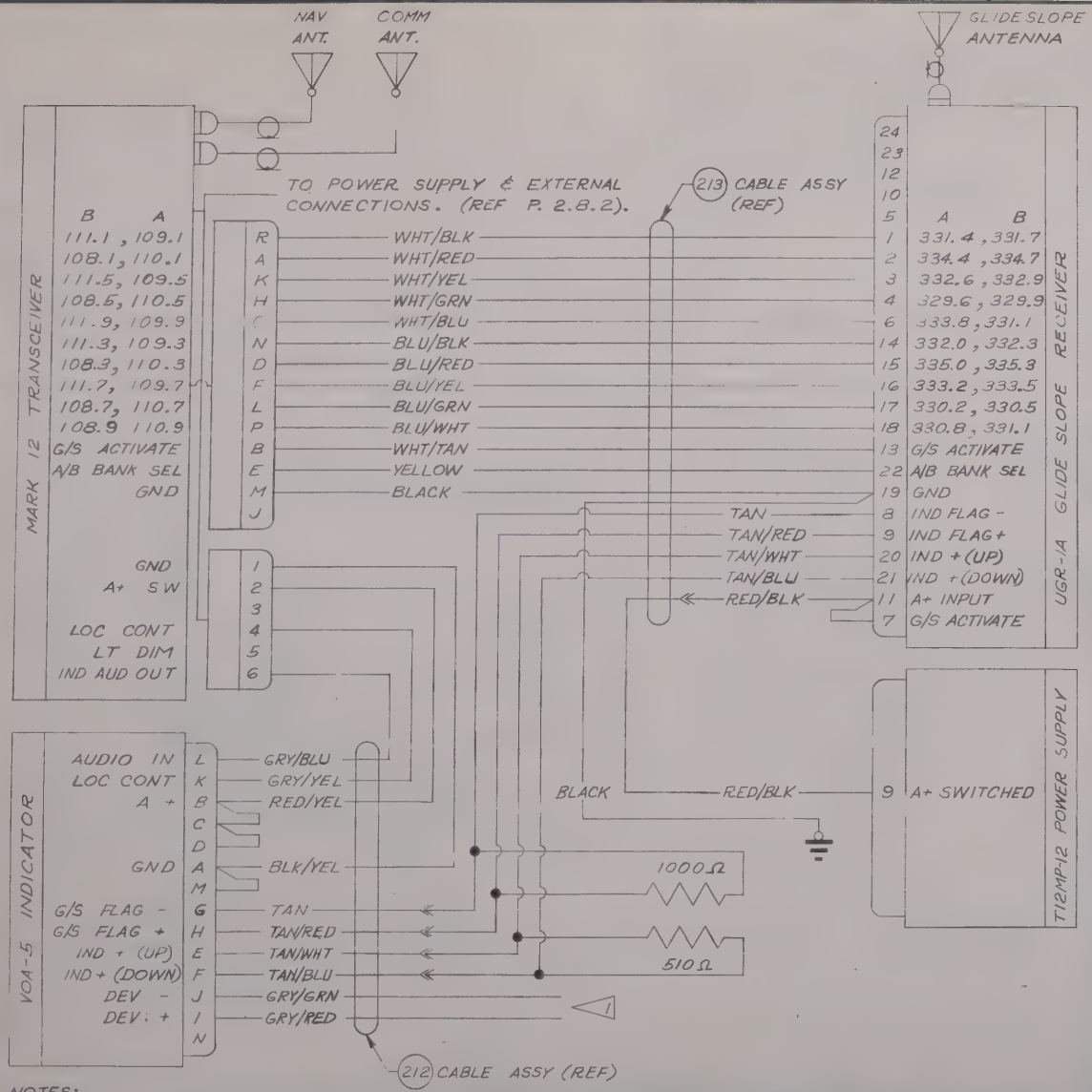


NOTES:

1. WIRES NOT USED SHALL BE SLEEVED AND TIED INTO BUNDLE.
2. WIRE MATERIAL PER S-1460.

| CHG LET | REVISION | BY DATE | CHK APPD |
|---|---|---|---|
| | | | |

| WIRE CODE NO. | GA | MATERIAL | LG | TERMINALS | | SERIALS |
|---|---|---|---|---|---|---|
| TAN | 22 | -22-10 | | SOLDER | S-341-2 | |
| TAN/RED | 22 | -22-10-2 | | | | |
| TAN/WHT | 22 | -22-10-9 | | | | |
| TAN/BLU | 22 | -22-10-6 | | | | |
| RED/BLK | 18 | -18-2-0 | | | S-341-2 | |
| RED/BLK | 18 | -18-2-0 | | | S-1367-1-8 | |
| BLACK | 18 | -18-0 | | | SOLDER | |
| WHT/BLK | 22 | -22-9-0 | | | | |
| WHT/RED | 22 | -22-9-2 | | | | |
| WHT/YEL | 22 | -22-9-4 | | | | |
| WHT/GRN | 22 | -22-9-5 | | | | |
| WHT/BLU | 22 | -22-9-6 | | | | |
| BLU/BLK | 22 | -22-6-0 | | | | |
| BLU/RED | 22 | -22-6-2 | | | | |
| BLU/YEL | 22 | -22-6-4 | | | | |
| BLU/GRN | 22 | -22-6-5 | | | | |
| BLU/WHT | 22 | -22-6-9 | | | | |
| WHT/TAN | 22 | -22-9-10 | | | | |
| YELLOW | 18 | -18-4 | | | | |
| BLACK | 18 | -18-0 | | | | |
| GRY/BLU | 22 | -22-8-6 | | | | |
| GRY/YEL | 22 | -22-8-4 | | | | |
| RED/YEL | 22 | -22-2-4 | | | | |
| BLK/YEL | 22 | -22-0-4 | | | SOLDER | |
| TAN | 22 | -22-10 | | | S-341-2 | |
| TAN/RED | 22 | -22-10-2 | | | | |
| TAN/WHT | 22 | -22-10-9 | | | | |
| TAN/BLU | 22 | -22-10-6 | | | S-341-2 | |
| GRY/GRN | 22 | -22-8-4 | | | | |
| GRY/RED | 22 | -22-8-2 | | SOLDER | | |

2 WIRE TABLE

CESSNA AIRCRAFT CO., COMMERCIAL AIRCRAFT DIVISION, WICHITA, KANSAS

| | NAME | DATE |
|---|---|---|
| DRAWN | SPRIGGS | 3-13-64 |
| GROUP | | |
| CHECK | | 3-27-64 |
| PROJ | | 5-21-64 |

TITLE: WIRING DIAGRAM — NARCO MARK 12 WITH UGR-1A & VOA-5

Cessna.

DWG NO. 0270400

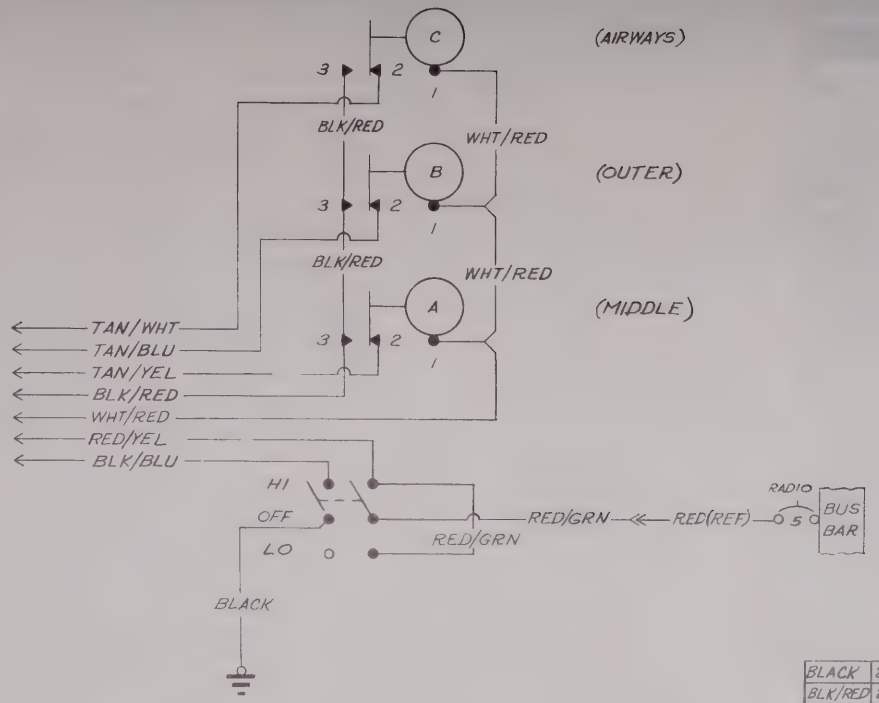


NOTES:

1. WIRE MATERIAL PER S-1460.

| WIRE CODE NO | GA | MATERIAL | LG | TERMINALS | | SERIALS |
|---|---|---|---|---|---|---|
| BLACK | 22 | -22-0 | 4.0 | SOLDER | S-1367-1-6 | |
| BLK/RED | 22 | -22-0-2 | 1.0 | | SOLDER | |
| BLK/RED | 22 | -22-0-2 | 1.0 | | | |
| WHT/RED | 22 | -22-9-2 | 1.0 | | | |
| WHT/RED | 22 | -22-9-2 | 1.0 | | SOLDER | |
| BLK/RED | 22 | -22-0-2 | 8.0 | | S-341-2 | |
| WHT/RED | 22 | -22-9-2 | 8.0 | | | |
| TAN/WHT | 22 | -22-10-9 | 8.0 | | | |
| TAN/BLU | 22 | -22-10-6 | 8.0 | | | |
| TAN/YEL | 22 | -22-10-4 | 8.0 | | | |
| BLK/BLU | 22 | -22-0-6 | 8.0 | | | |
| RED/GRN | 20 | -20-2-5 | 8.0 | | S-341-2 | |
| RED/GRN | 20 | -20-2-5 | .5 | | SOLDER | |
| RED/YEL | 22 | -22-2-4 | 8.0 | SOLDER | S-341-2 | |

1 WIRE TABLE

| ITEM NO | PART NO | DESCRIPTION | INSTALLED ON |
|---|---|---|---|
| | | EQUIPMENT TABLE | |

CESSNA AIRCRAFT CO. COMMERCIAL AIRCRAFT DIVISION WICHITA, KANSAS

| | NAME | DATE |
|---|---|---|
| DRAWN | SPRIGGS | 3-13-64 |
| GROUP | | |
| CHECK | C. Black | 3-27-64 |
| PROJ | H. Little | 5-21-64 |

TITLE: WIRING DIAGRAM — REMOTE MARKER BEACON LIGHTS & SENSITIVITY SWITCH

Cessna

DWG NO: 0770400

| SUPERSEDED BY | SUPERSEDES | MODEL: | REV: | PAGE: |
|---|---|---|---|---|
| | | 180, 185 | | 2-13 |

FORM NO. 80-161

(SR4441)
(SR4442)

| CHG LET | REVISION | BY / DATE | CHK / APPD |
|---|---|---|---|
| | | | |

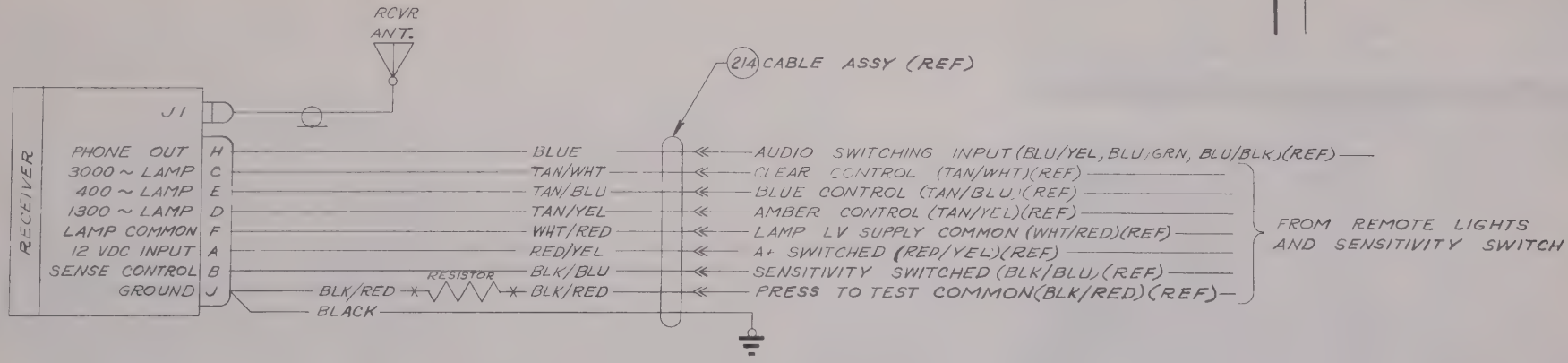


NOTES:
1. WIRE MATERIAL PER S-1460.
2. CABLE ASSEMBLY MAY BE WIRED DIRECT TO MKR LIGHTS BY DELETING ALL S-341 QUICK DISCONNECTS (REF P. 2.13).

| WIRE CODE NO | GA | MATERIAL | LG | TERMINALS | | SERIALS |
|---|---|---|---|---|---|---|
| BLACK | 22 | -22-0 | | SOLDER | S-1367-1-6 | |
| BLK/RED | 22 | -22-0-2 | | S-1370-0 | S-341-2 | |
| BLK/RED | 22 | -22-0-2 | | SOLDER | S-1370-0 | |
| BLK/BLU | 22 | -22-0-6 | | ↑ | S-341-2 | |
| RED/YEL | 22 | -22-2-4 | | ↑ | ↑ | |
| WHT/RED | 22 | -22-9-2 | | | | |
| TAN/YEL | 22 | -22-10-4 | | | | |
| TAN/BLU | 22 | -22-10-6 | | | | |
| TAN/WHT | 22 | -22-10-9 | | ↓ | ↓ | |
| BLUE | 22 | -22-6 | | SOLDER | S-341-2 | |

1 WIRE TABLE

CESSNA AIRCRAFT CO. COMMERCIAL AIRCRAFT DIVISION, WICHITA, KANSAS

| | NAME | DATE |
|---|---|---|
| DRAWN | SPRIGGS | 3-13-64 |
| GROUP | | |
| CHECK | R. Finch | 3-27-64 |
| PROJ | W. Settle | 3-21-64 |

TITLE: WIRING DIAGRAM — CESSNA MARKER BEACON 300 (ARC TYPE R-502B)

Cessna.

DWG NO 0770400

| PART NO | DESCRIPTION | INSTALLED ON |
|---|---|---|

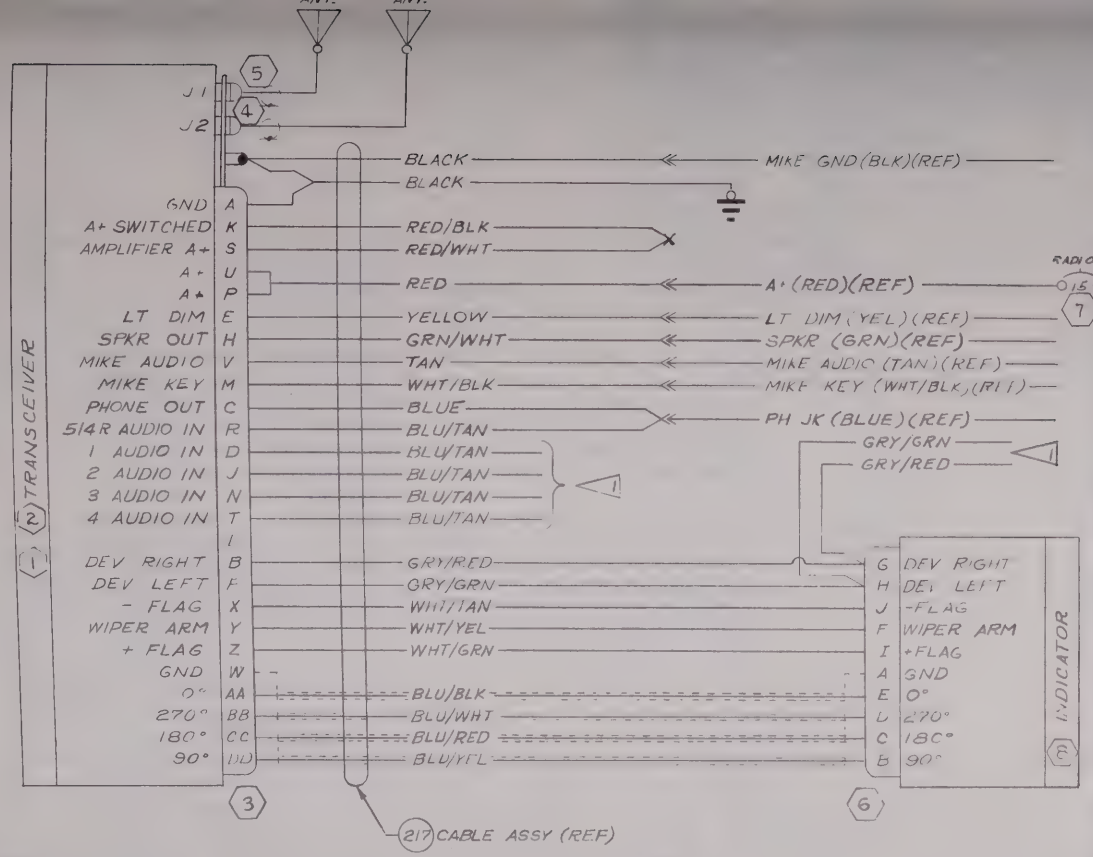


NOTES:

1. WIRES NOT USED SHALL BE SLEEVED AND TIED INTO BUNDLE.
2. WIRE MATERIAL PER S-1460 EXCEPT AS NOTED.
3. WIRING SHOWN IS FOR SINGLE UNIT INSTALLATION. FOR MULTIPLE INSTALLATIONS, SEE P. 2.3.1.0 & P. 2.3.1.1.

| WIRE CODE NO | GA | MATERIAL | LG | TERMINALS | | SERIALS |
|---|---|---|---|---|---|---|
| BLACK | 16 | -16-0 | | SOLDER | S-1361-2-8 | |
| RED/BLK | 18 | -18-2-0 | | | S-1370-1 | |
| RED/WHT | 18 | -18-2-9 | | | | |
| RED | 16 | -16-2 | | | S-341-1 | |
| BLACK | 22 | 22- | | | S-341-2 | |
| YELLOW | 18 | -18-4 | | | | |
| GRN/WHT | 20 | 20-5-9 | | | | |
| TAN | 22 | -22-10 | | | | |
| WHT/BLK | 22 | -22-9-0 | | | | |
| BLUE | 22 | -22-6 | | | | |
| BLU/TAN | 22 | -22-6-10 | | | S-341-2 | |
| BLU/TAN | 22 | | | | SOLDER | |
| BLU/TAN | 22 | | | | | |
| BLU/TAN | 22 | | | | | |
| BLU/TAN | 22 | 22-6-10 | | | | |
| GRY/RED | 22 | -22-8-2 | | | | |
| GRY/GRN | 22 | -22-8-5 | | | | |
| GRY/RED | 22 | -22-8-2 | | | | |
| GRY/GRN | 22 | 22-8-5 | | | | |
| WHT/TAN | 22 | -22-9-10 | | | | |
| WHT/YEL | 22 | -22-9-4 | | | | |
| WHT/GRN | 22 | -22-9-5 | | | | |
| BLU/BLK | 22S | S-1461-22-6-0 | | | | |
| BLU/WHT | 22S | S-1461-22-6-9 | | | | |
| BLU/RED | 22S | S-1461-22-6-2 | | | | |
| BLU/YEL | 22S | S-1461-22-6-4 | | SOLDER | SOLDER | |

2 WIRE TABLE

| ITEM NO | PART NO | DESCRIPTION | INSTALLED ON |
|---|---|---|---|
| 8 | 31640 | INDICATOR (ARC TYPE IN514R) | |
| 7 | S-1360-15 | CKTBKR | |
| 6 | 32604 | CONNECTOR (ARC) | |
| 5 | 29752 | CONNECTOR (ARC) | |
| 4 | 29753 | CONNECTOR (ARC) | |
| 3 | 29747-0026 | CONNECTOR (ARC) | |
| 2 | 34640-1114 | XCVR (ARC TYPE 515R) | |
| 1 | 32580-1114 | XCVR (ARC TYPE 514R-11) | |

EQUIPMENT TABLE

CESSNA AIRCRAFT CO. COMMERCIAL AIRCRAFT DIVISION, WICHITA, KANSAS

| | NAME | DATE |
|---|---|---|
| DRAWN | SPRIGGS | 3-31-64 |
| GROUP | [illegible] | [illegible] |
| CHECK | [illegible] | 5-20-64 |
| PROJ | [illegible] | 5-21-64 |

TITLE: WIRING DIAGRAM — CESSNA NAV-COMM 300R (ARC TYPE 514R & 515R)

Cessna.

DWG NO 0770400

| SUPERSEDED BY | SUPERSEDES | MODEL | REV | PAGE |
|---|---|---|---|---|
| | | 180, 185 | A | 2.16.1 |

FORM NO. 80-161

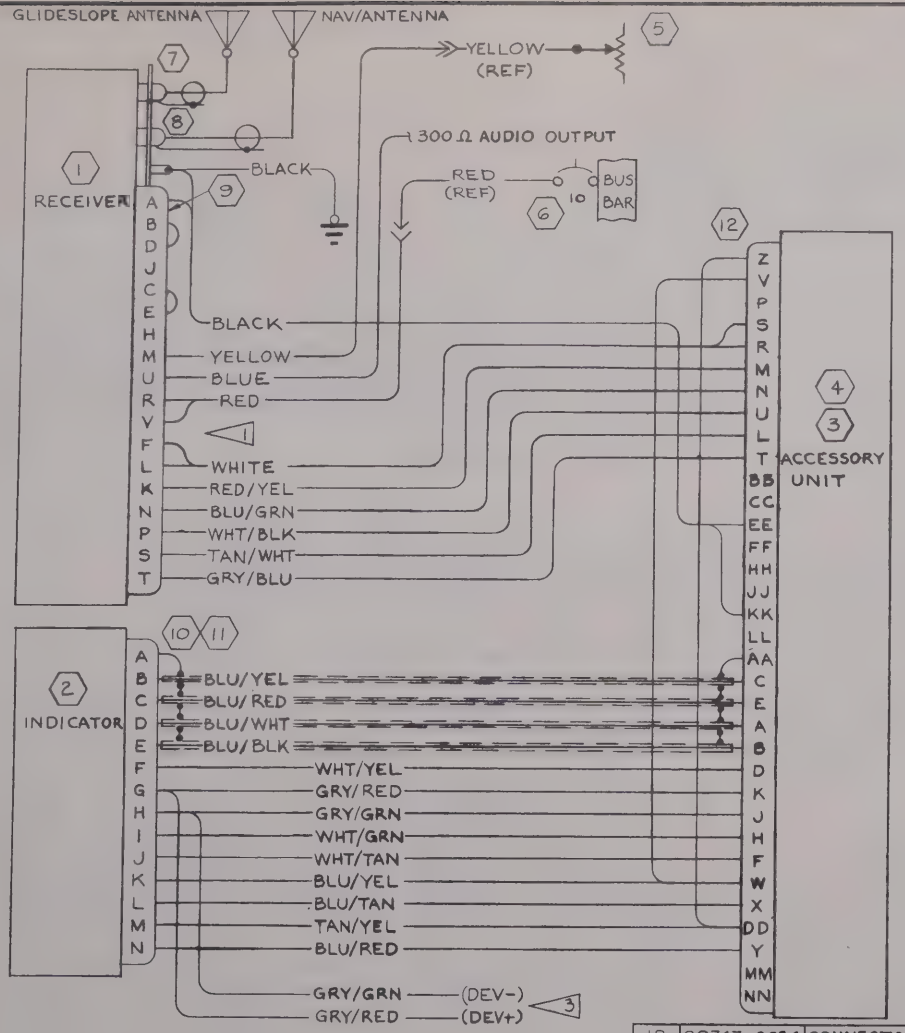


NOTES: (SR4832)

1. RED, WHITE & BLACK 16 GA WIRES TO BE HALVED & SOLDERED TO PINS AS SHOWN.
2. WIRE MATERIAL PER S-1460 EXCEPT FOR SHIELDED WIRE.
3. TERMINALS NOT REQD WHEN RADIO IS INSTALLED WITH AN AUTOPILOT.

| CHG LET | REVISION | BY / DATE | CHK / APPD |
|---|---|---|---|
| | | | |

| | | | | | | | |
|---|---|---|---|---|---|---|---|
| BLACK | 16 | S-1460-16-0 | | SOLDER | SOLDER | | |
| BLACK | 16 | S-1460-16-0 | | S-1367-2-8 | SOLDER | | |
| BLU/WHT | 22-5 | S-1461-22-6-9 | | SOLDER | SOLDER | | |
| BLU/YEL | 22-5 | S-1461-22-6-9 | | | | | |
| BLU/BLK | 22-5 | S-1461-22-6-0 | | | | | |
| BLU/RED | 22-5 | S-1461-22-6-2 | | | | | |
| WHT/BLK | 22 | -22-9-0 | | | | | |
| TAN/WHT | 22 | -22-10-9 | | | | | |
| TAN/YEL | 22 | -22-10-9 | | | | | |
| WHT/TAN | 22 | -22-9-10 | | | | | |
| WHT/GRN | 22 | -22-9-5 | | | | | |
| WHT/YEL | 22 | -22-9-4 | | | SOLDER | | |
| GRY/GRN | 22 | -22-8-5 | | SOLDER | S-1557-1 | | |
| GRY/GRN | 22 | -22-8-5 | | SOLDER | SOLDER | | |
| GRY/RED | 22 | -22-8-2 | | | S-1557-1 | | |
| GRY/RED | 22 | -22-8-2 | | | SOLDER | | |
| GRY/BLU | 22 | -22-8-6 | | | | | |
| BLU/TAN | 22 | -22-6-10 | | | | | |
| BLU/GRN | 22 | -22-6-5 | | | | | |
| BLU/YEL | 22 | -22-6-4 | | | | | |
| BLU/RED | 22 | -22-6-2 | | | | | |
| RED/YEL | 22 | -22-2-9 | | | | | |
| WHITE | 16 | -16-9 | | | SOLDER | | |
| BLUE | 22 | -22-6 | | | | | |
| YELLOW | 18 | -18-4 | | | S-321-2 | | |
| RED | 16 | -16-2 | | SOLDER | S-341-2 | | |
| WIRE CODE NO. | GA | MATERIAL | LG | TERMINALS | | | SERIALS |

2 WIRE TABLE

| | | | |
|---|---|---|---|
| 12 | 29747-0034 | CONNECTOR (ARC) | |
| 11 | MS3057-12A | CLAMP | |
| 10 | MS3106A-20-27S | PLUG | |
| 9 | 29747-0018 | CONNECTOR (ARC) | |
| 8 | 29752 | CONNECTOR (ARC) | |
| 7 | 29753 | CONNECTOR (ARC) | |
| 6 | S-1360-10 | CIRCUIT BREAKER | |
| 5 | 0413126-5 | RHEOSTAT | |
| 4 | 32890-0014 | ACCESSORY UNIT W/O MR (ARC RA-525A) | |
| 3 | 32980-0014 | ACCESSORY UNIT (ARC RA-525A-1) | |
| 2 | 32350 | INDICATOR (ARC IN-525) | |
| 1 | 31380-1000 | RCVR (ARC R-525A-10) | |
| | PART NO | DESCRIPTION | INSTALLED ON |

CESSNA AIRCRAFT CO. COMMERCIAL AIRCRAFT DIVISION, WICHITA, KANSAS

| | NAME | DATE |
|---|---|---|
| DRAWN | W COOK | 5-19-65 |
| GROUP | J. Wise | 5-19-65 |
| CHECK | R. Stuck | 5-20-65 |
| PROJ | M. Gattis | 5-26-65 |

TITLE: WIRING DIAGRAM — CESSNA NAV/OMNI 300 (ARC TYPE 525A)

Cessna.

DWG NO 0770400

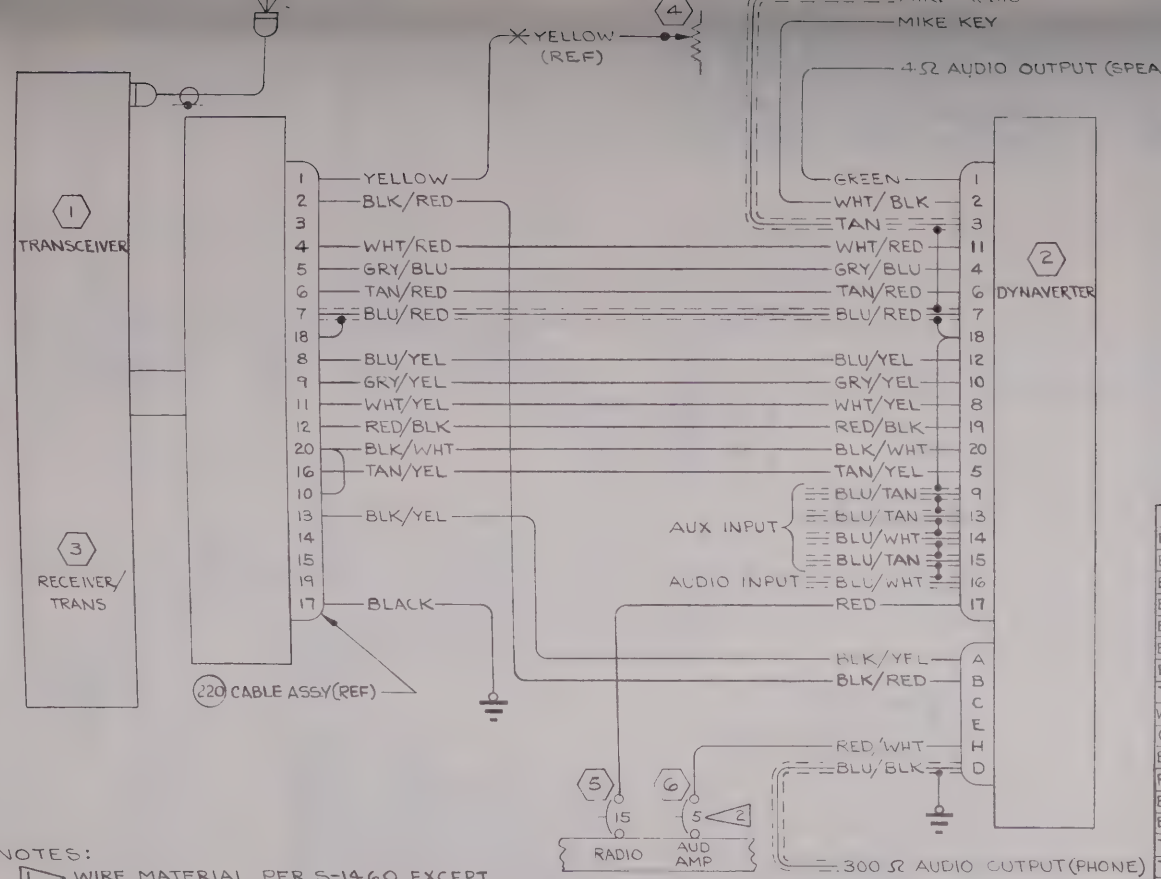


NOTES:

1. WIRE MATERIAL PER S-1460 EXCEPT FOR SHIELDED WIRE.
2. CONNECT RED/WHT WIRE TO SAME CKT BKR WITH RED WIRE ON 2ND UNIT INSTALLATIONS.

| WIRE CODE NO | GA | MATERIAL | LG | TERMINALS | | SERIALS |
|---|---|---|---|---|---|---|
| BLACK | 16 | -16-0 | | SOLDER | S-1367-2-8 | |
| RED/WHT | 18 | -18-2-9 | | SOLDER | S-1367-1-6 | |
| BLU/BLK | 22S | S-1461-22-6-0 | | SOLDER S-1367-2-0 | | |
| BLU/WHT | 22S | S-1461-22-6-9 | | SOLDER | | |
| BLU/WHT | 22S | S-1461-22-6-9 | | | | |
| BLU/TAN | 22S | S-1461-22-6-10 | | | | |
| BLU/TAN | 22S | S-1461-22-6-10 | | | | |
| BLU/TAN | 22S | S-1461-22-6-10 | | | | |
| TAN | 22S | S-1461-22-10 | | | | |
| WHT/BLK | 22 | -22-9-0 | | | | |
| GREEN | 20 | -20-5 | | | | |
| BLK/WHT | 18 | -18-0-9 | | | SOLDER | |
| RED/BLK | 18 | -18-2-0 | | | | |
| BLU/YEL | 22 | -22-6-4 | | | | |
| BLU/RED | 22S | S-1461-22-6-2 | | | | |
| TAN/YEL | 22 | -22-10-4 | | | | |
| TAN/RED | 22 | -22-10-2 | | | | |
| GRY/YEL | 22 | -22-8-4 | | | | |
| GRY/BLU | 22 | -22-8-6 | | | | |
| WHT/YEL | 22 | -22-9-4 | | | | |
| WHT/RED | 22 | -22-9-2 | | | | |
| BLK/YEL | 22 | -22-0-4 | | | | |
| BLK/RED | 22 | -22-0-2 | | | SOLDER | |
| YELLOW | 18 | -18-4 | | | S-1370-1 | |
| RED | 16 | -16-2 | | SOLDER | S-1367-2-6 | |

1 WIRE TABLE

| ITEM NO | PART NO. | DESCRIPTION | INSTALLED ON |
|---|---|---|---|
| 6 | S-1360-5 | CIRCUIT BREAKER | |
| 5 | S-1360-15 | CIRCUIT BREAKER | |
| 4 | 0413126-5 | RHEOSTAT | |
| 3 | 33580-1000 | RECEIVER/TRANS (ARC TYPE RT-302H) | |
| 2 | 32380-0014 | DYNAVERTER (ARC TYPE DV-302B) | |
| 1 | 33200-1000 | TRANSCEIVER (ARC TYPE RT-3026-10) | |

EQUIPMENT TABLE

CESSNA AIRCRAFT CO., COMMERCIAL AIRCRAFT DIVISION, WICHITA, KANSAS

| | NAME | DATE |
|---|---|---|
| DRAWN | W COOK | 11-9-64 |
| GROUP | | |
| CHECK | [illegible] | 11-12-64 |
| PROJ | [illegible] | 11-12-64 |
| | [illegible] | 11-13-64 |

TITLE: WIRING DIAGRAM — CESSNA TRANSCEIVER 500 (ARC TYPE 3026)

Cessna.

DWG NO. 0770400

SUPERSEDED BY [illegible] | SUPERSEDES | MODEL: 180-185 | REV | PAGE: 2.19.1

FORM NO. 80-161

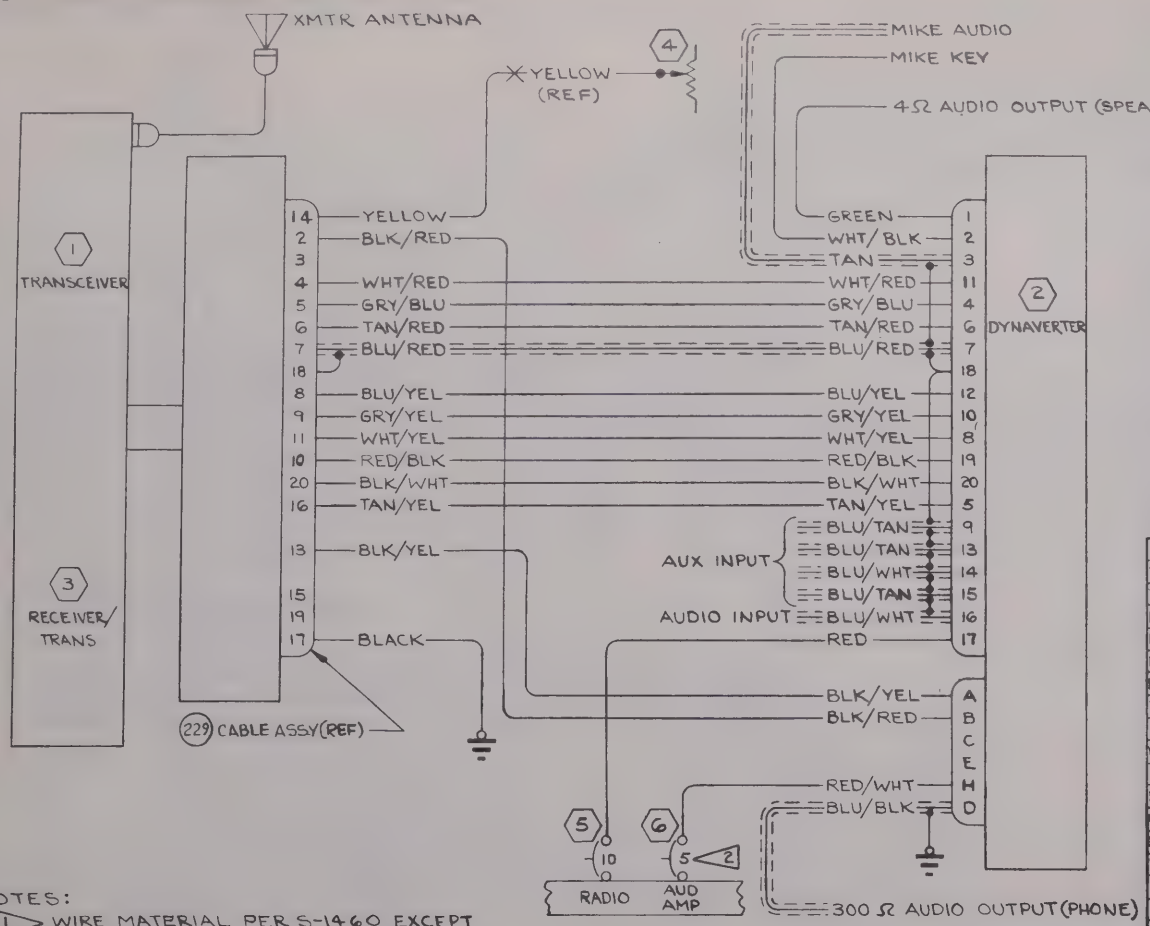


| CHG LET | REVISION | BY DATE | CHK APPD |
|---|---|---|---|
| | | | |

NOTES:

1. WIRE MATERIAL PER S-1460 EXCEPT FOR SHIELDED WIRE.
2. CONNECT RED/WHT WIRE TO SAME CKT BKR WITH RED WIRE ON 2ND UNIT INSTALLATIONS.

| WIRE CODE NO. | GA | MATERIAL | LG | TERMINALS | | | SERIALS |
|---|---|---|---|---|---|---|---|
| BLACK | 16 | -16-0 | | SOLDER | | S-1367-2-8 | |
| RED/WHT | 18 | -18-2-9 | | | | S-1367-1-6 | |
| BLU/BLK | 22S | S-1461-22-6-0 | | | | | |
| BLU/WHT | 22S | S-1461-22-6-9 | | | | | |
| BLU/WHT | 22S | S-1461-22-6-9 | | | | | |
| BLU/TAN | 22S | S-1461-22-6-10 | | | | | |
| BLU/TAN | 22S | S-1461-22-6-10 | | | | | |
| BLU/TAN | 22S | S-1461-22-6-10 | | | | | |
| TAN | 22S | S-1461-22-10 | | | | | |
| WHT/BLK | 22 | -22-9-0 | | | | | |
| GREEN | 20 | -20-5 | | | | | |
| BLK/WHT | 18 | -18-0-9 | | | | SOLDER | |
| RED/BLK | 18 | -18-2-0 | | | | | |
| BLU/YEL | 22 | -22-6-4 | | | | | |
| BLU/RED | 22S | S-1461-22-6-2 | | | | | |
| TAN/YEL | 22 | -22-10-4 | | | | | |
| TAN/RED | 22 | -22-10-2 | | | | | |
| GRY/YEL | 22 | -22-8-4 | | | | | |
| GRY/BLU | 22 | -22-8-6 | | | | | |
| WHT/YEL | 22 | -22-9-4 | | | | | |
| WHT/RED | 22 | -22-9-2 | | | | | |
| BLK/YEL | 22 | -22-0-4 | | | | | |
| BLK/RED | 22 | -22-0-2 | | | | SOLDER | |
| YELLOW | 18 | -18-4 | | | | S-1370-1 | |
| RED | 16 | -16-2 | | SOLDER | | S-1367-2-6 | |

1 WIRE TABLE

| | | |
|---|---|---|
| 6 | S-1360-5 | CIRCUIT BREAKER |
| 5 | S-1360-10 | CIRCUIT BREAKER |
| 4 | 0413126-5 | RHEOSTAT |
| 3 | 33200-0000 | RECEIVER/TRANS ARC TYPE RT-302G10 |
| 2 | 32380-0028 | DYNAVERTER ARC TYPE DV-302B |
| 1 | 33580-0000 | TRANSCEIVER ARC TYPE RT-302H |

CESSNA AIRCRAFT CO COMMERCIAL AIRCRAFT DIVISION WICHITA KANSAS

| | NAME | DATE |
|---|---|---|
| DRAWN | W COOK | 2-1-65 |
| GROUP | W Tennant | 2-3-65 |
| CHECK | R. Stuck | 2-2-65 |
| PROJ | W. Wing | 2-3-65 |

TITLE: WIRING DIAGRAM — CESSNA TRANSCEIVER 500 (24V) (ARC TYPE 302G)

Cessna.

DWG NO. 0770400

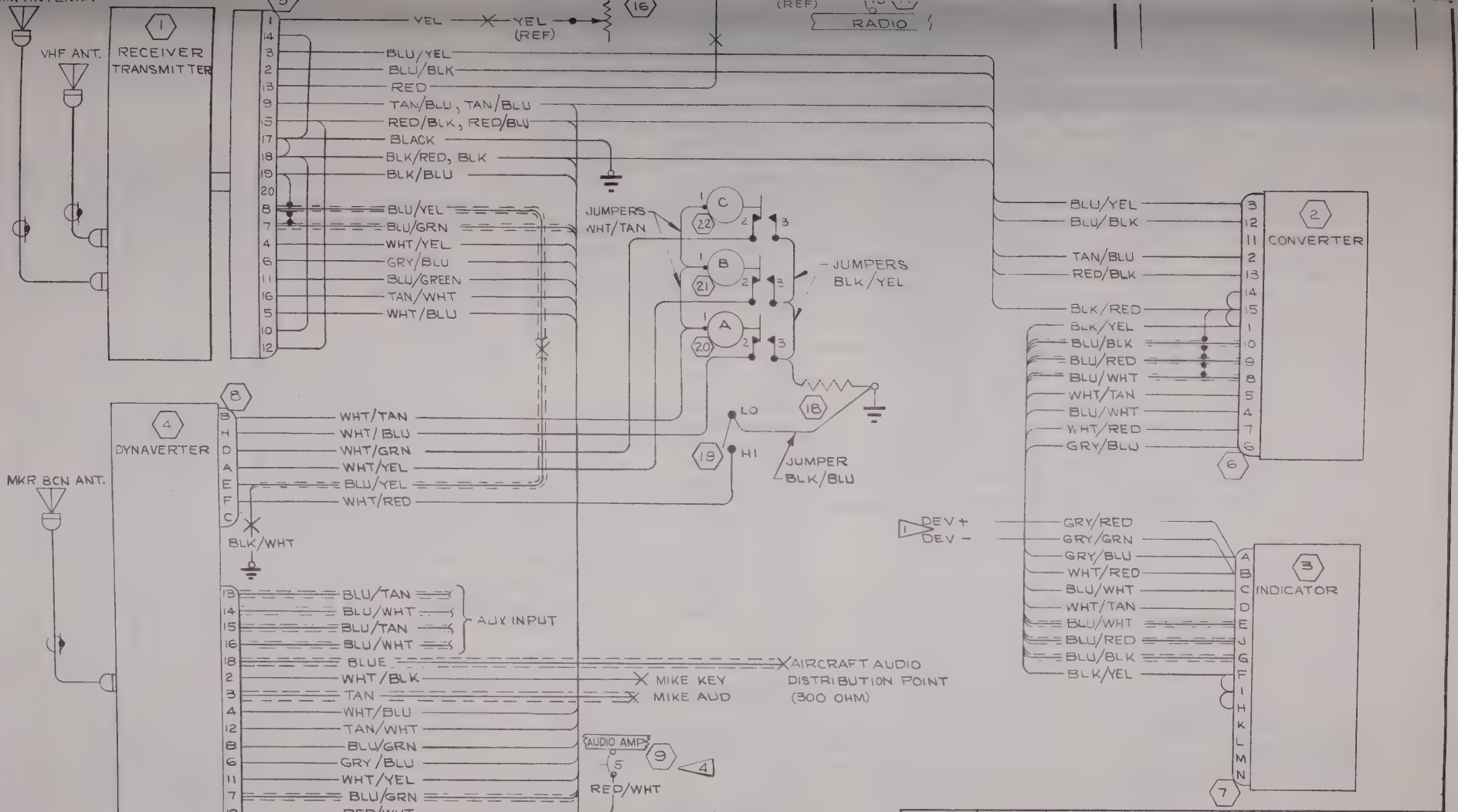


| ITEM NO | PART NO. | DESCRIPTION | INSTALLED ON |
|---|---|---|---|

EQUIPMENT TABLE

| WIRE CODE NO | GA | MATERIAL | LG | TERM NALS | SERIALS |
|---|---|---|---|---|---|

WIRE TABLE

CESSNA AIRCRAFT CO., COMMERCIAL AIRCRAFT DIVISION, WICHITA, KANSAS

| | NAME | DATE |
|---|---|---|
| DRAWN | W COOK | 11-7-64 |
| GROUP | | |
| CHECK | | |
| PROJ | | |

TITLE: WIRING DIAGRAM — CESSNA NAV/COMM 500 (ARC TYPE 3176)

Cessna.

DWG NO. 0770400

| SUPERSEDED BY | SUPERSEDES | MODEL | REV | PAGE |
|---|---|---|---|---|
| | | 180 & 185 | | 2.20.1.1 |

FORM NO. 80-161

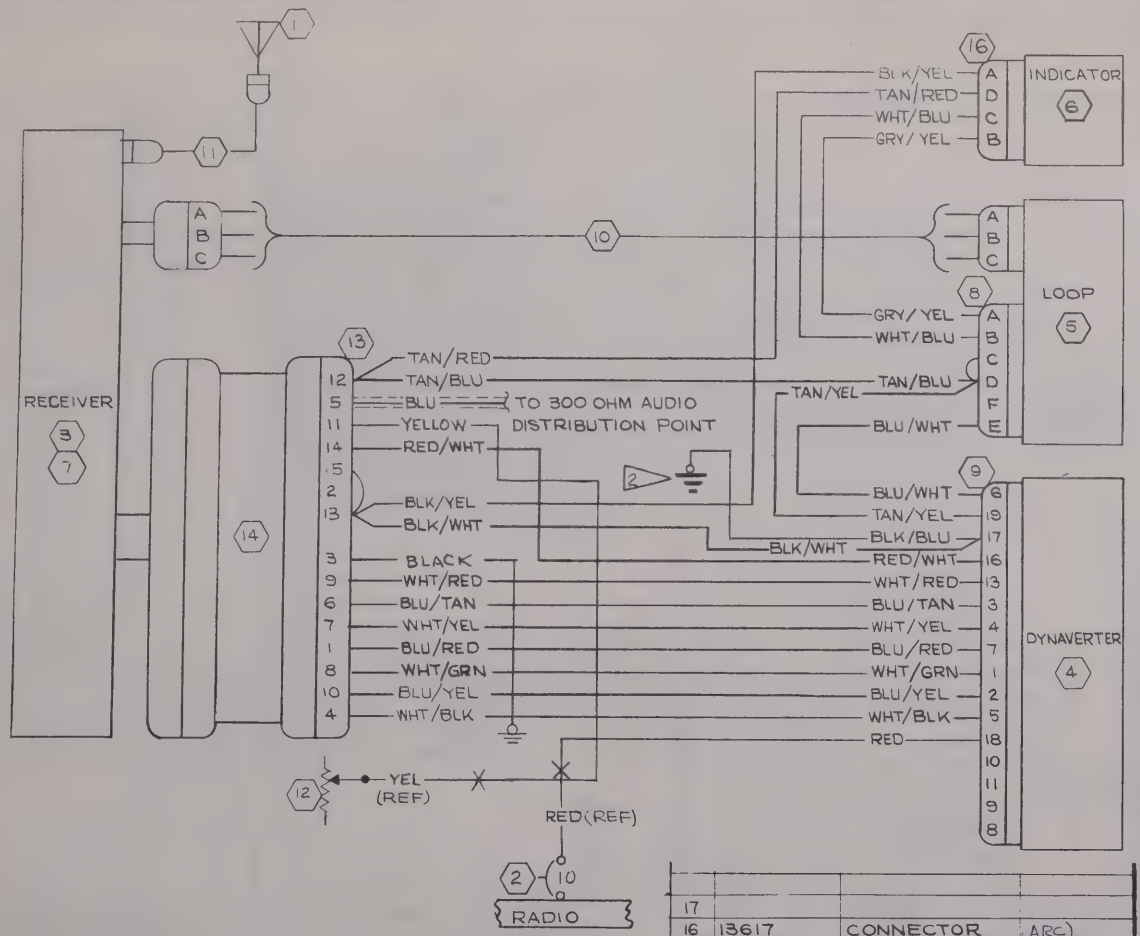


INACTIVE EFF THRU SER 18051607
SER 185-0967

W.J.Q. 4-26-65
H L W 5-14-65
RRS 5-17-65
DKM 5-18-65
MC

| CHG LET | REVISION | BY / DATE | CHK / APPD |
|---|---|---|---|
| | | | |

NOTES:

1. INDICATOR & LOOP CONNECTIONS SHOWN ARE FOR TOP MOUNTED LOOP & SENSE ANTENNA.
2. BLK/BLU WIRE TO BE GROUNDED TO AIRFRAME NEAR LOOP BUT NOT CONNECTED TO LOOP.
3. WIRE MATERIAL PER S-1466 EXCEPT, AS NOTED

| | | | |
|---|---|---|---|
| 17 | | | |
| 16 | 13617 | CONNECTOR | (ARC) |
| 15 | | | |
| 14 | 27859 | FILTER ASSY | (ARC) |
| 13 | 26795 | CONNECTOR | (ARC) |
| 12 | 0413126-5 | RHEOSTAT | |
| 11 | 18637 | SENSE ANT. CABLE | (ARC) |
| 10 | 17985 | LOOP CABLE ASSY | (ARC) |
| 9 | 27881 | CONNECTOR | (ARC) |
| 8 | 19062 | CONNECTOR | (ARC) |
| 7 | 33230-1000 | RCVR W/O BFO | (ARC TYPE-318G10) |
| 6 | 27500 | INDICATOR | (ARC TYPE 318A-1) |
| 5 | 18000 | LOOP | (ARC TYPE L-11) |
| 4 | 26969-0014 | DYNAVERTER | (ARC TYPE DV318A) |
| 3 | 33230-1200 | RECEIVER | (ARC TYPE R-318G12) |
| 2 | S-1360-10 | CIRCUIT BREAKER | |
| 1 | -608 | SENSE ANTENNA | |

| WIRE CODE NO. | GA | MATERIAL | LG | TERMINALS | | | SERIALS |
|---|---|---|---|---|---|---|---|
| BLK | 18 | -18-0 | | S-1367-1-8 | SOLDER | | |
| YELLOW | 18 | -18-4 | | S-1370-1 | SOLDER | | |
| BLUE | 22S | S-1461-22-6 | | | | | |
| BLK/WHT | 18 | -18-0-9 | | SOLDER | | | |
| TAN/RED | 22 | -22-10-2 | | | | | |
| BLK/YEL | 22 | -22-0-4 | | | | | |
| GRY/YEL | 22 | -22-8-4 | | | | | |
| WHT/BLU | 22 | -22-9-6 | | | | | |
| TAN/BLU | 22 | -22-10-6 | | SOLDER | | | |
| RED | 16 | -16-2 | | S-1370-2 | | | |
| WHT/BLK | 22 | -22-9-0 | | SOLDER | | | |
| BLU/YEL | 22 | -22-6-4 | | | | | |
| WHT/GRN | 22 | -22-9-5 | | | | | |
| BLU/RED | 22 | -22-6-2 | | | | | |
| WHT/YEL | 22 | -22-9-4 | | | | | |
| BLU/TAN | 22 | -22-6-10 | | | | | |
| WHT/RED | 22 | -22-9-2 | | | | | |
| RED/WHT | 18 | -18-2-9 | | | SOLDER | | |
| BLK/BLU | 22 | -22-0-6 | | | S-1367-1-8 | | |
| TAN/YEL | 22 | -22-10-4 | | | SOLDER | | |
| BLU/WHT | 22 | -22-6-9 | | SOLDER | SOLDER | | |

WIRE TABLE

CESSNA AIRCRAFT CO., COMMERCIAL AIRCRAFT DIVISION, WICHITA, KANSAS

| | NAME | DATE |
|---|---|---|
| DRAWN | [illegible] | 11-10-64 |
| GROUP | | |
| CHECK | [illegible] | [illegible] |
| PROJ | | [illegible] |

TITLE: WIRING DIAGRAM — CESSNA ADF 500

(ARC TYPE 318C)

Cessna.

DWG NO. 0770400

| | | | |
|---|---|---|---|
| A | REACTIVATED DWG (SK4611) | 8-17-65 | |

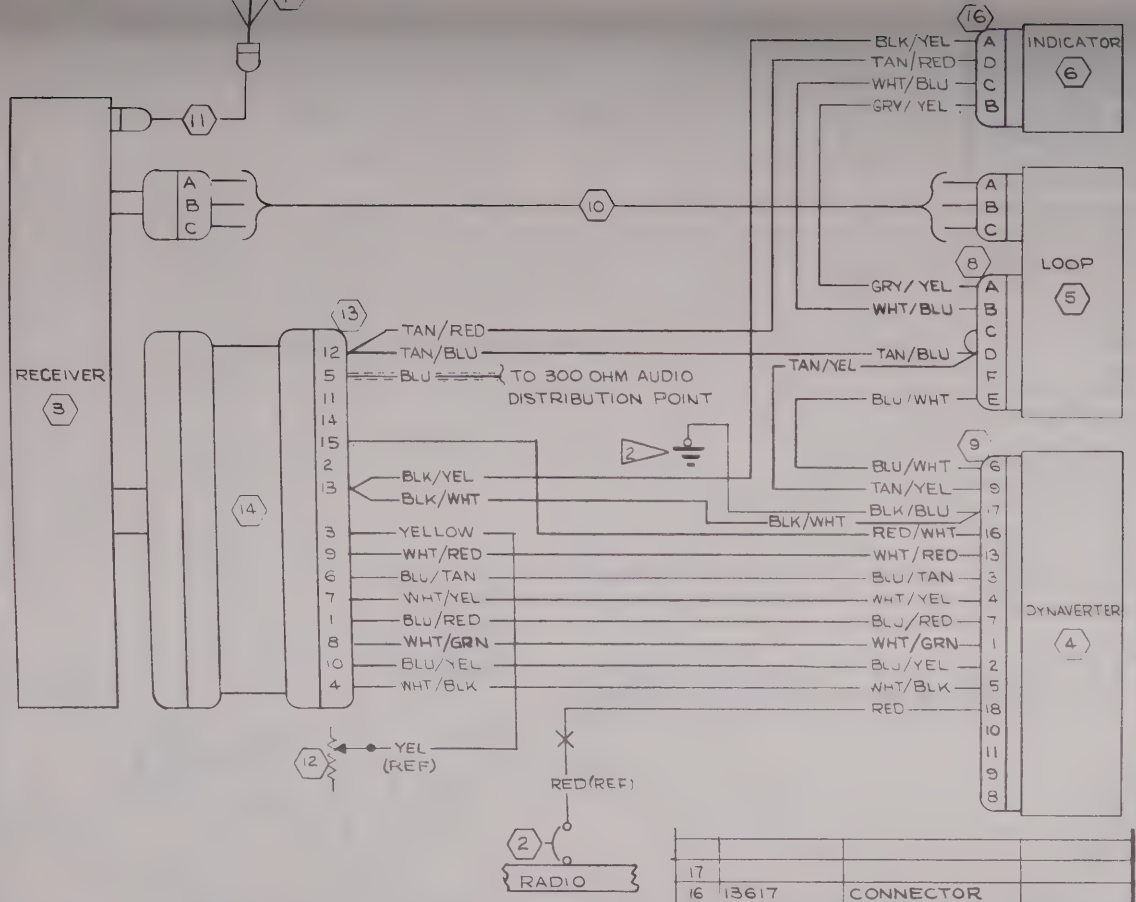


NOTES:

1. INDICATOR & LOOP CONNECTIONS SHOWN ARE FOR TOP MOUNTED LOOP & SENSE ANTENNA.
2. BLK/BLU WIRE TO BE GROUNDED TO AIRFRAME NEAR LOOP BUT NOT CONNECTED TO LOOP.
3. WIRE MATERIAL PER S-1460 EXCEPT AS NOTED.

| ITEM NO | PART NO. | DESCRIPTION | INSTALLED ON |
|---|---|---|---|
| 17 | | | |
| 16 | 13617 | CONNECTOR | |
| 15 | | | |
| 14 | 27859 | FILTER ASSY | (ARC) |
| 13 | 26795 | CONNECTOR | (ARC) |
| 12 | 0413126-5 | RHEOSTAT | |
| 11 | 18637 | SENSE ANT. CABLE | (ARC) |
| 10 | 17985 | LOOP CABLE ASSY | (ARC) |
| 9 | 27881 | CONNECTOR | (ARC) |
| 8 | 19062 | CONNECTOR | (ARC) |
| 7 | | | |
| 6 | 27500 | INDICATOR | ARC TYPE 318A-1 |
| 5 | 18000 | LOOP | ARC TYPE L-11 |
| 4 | 26960-0028 | DYNAVERTER | ARC TYPE DV318A |
| 3 | 33230-0000 | RECEIVER | ARC TYPE R-318G-12 |
| 2 | S-1360-5 | CIRCUIT BREAKER | |
| 1 | -608 | SENSE ANTENNA | |

EQUIPMENT TABLE

| WIRE CODE NO | GA | MATERIAL | LG | TERMINALS | | | SERIALS |
|---|---|---|---|---|---|---|---|
| YELLOW | 18 | -18-4 | | S-1370-1 | SOLDER | | |
| BLUE | 22S | S1461-22-6 | | | | | |
| BLK/WHT | 18 | -18-0-9 | | SOLDER | | | |
| TAN/RED | 22 | 22-10-2 | | | | | |
| BLK/YEL | 22 | -22-0-4 | | | | | |
| GRY/YEL | 22 | -22-8-4 | | | | | |
| WHT/BLU | 22 | -22-9-6 | | | | | |
| TAN/BLU | 22 | 22-10-6 | | SOLDER | | | |
| RED | 16 | -16-2 | | S-1370-2 | | | |
| WHT/BLK | 22 | -22-9-0 | | SOLDER | | | |
| BLU/YEL | 22 | 22-6-4 | | | | | |
| WHT/GRN | 22 | -22-9-5 | | | | | |
| BLU/RED | 22 | -22-6-2 | | | | | |
| WHT/YEL | 22 | 22-9-4 | | | | | |
| BLU/TAN | 22 | -22-8-10 | | | | | |
| WHT/RED | 22 | -22-9-2 | | | | | |
| RED/WHT | 18 | -18-2-9 | | | SOLDER | | |
| BLK/BLU | 22 | -22-0-6 | | | S1367-1-8 | | |
| TAN/YEL | 22 | -22-10-4 | | | SOLDER | | |
| BLU/WHT | 22 | -22-6-9 | | SOLDER | SOLDER | | |

3. WIRE TABLE

CESSNA AIRCRAFT CO. COMMERCIAL AIRCRAFT DIVISION WICHITA KANSAS

| | NAME | DATE |
|---|---|---|
| DRAWN | W. Cook | 2-1-65 |
| GROUP | V. Tennant | 2-3-65 |
| CHECK | R. Stuck | 2-2-65 |
| PROJ | H. Wise | 2-3-65 |
| | [illegible] | 2-5-65 |

TITLE: WIRING DIAGRAM — ARC 318G ADF (24 VOLT) (ARC TYPE 318G)

Cessna.

DWG NO. 0770400

SUPERSEDED BY | SUPERSEDES | MODEL 185 | REV A | PAGE 2.21.2

FORM NO. 80-161

| CHG LET | REVISION | BY DATE | CHK APPD |
|---|---|---|---|
| | | | |

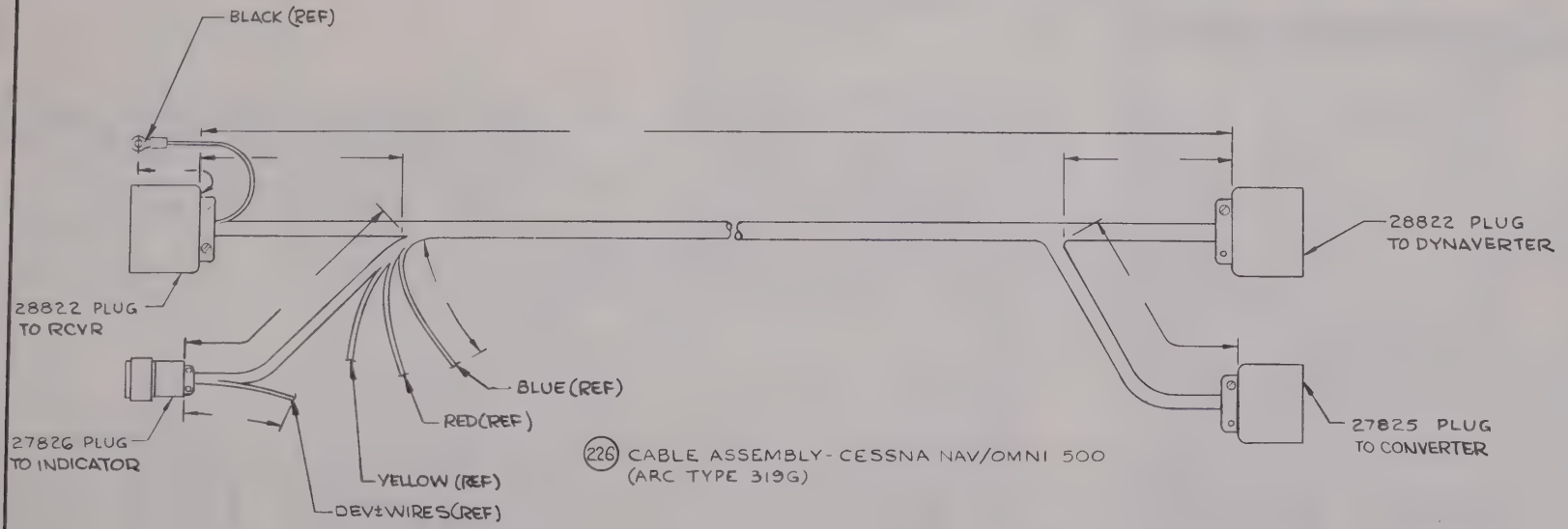


(226) CABLE ASSEMBLY - CESSNA NAV/OMNI 500
(ARC TYPE 319G)

NOTES:
1. ALL LENGTHS TO BE DETERMINED ON FIRST INSTL.

| NO REQD/NEXT ASSY | EFFECTIVE SERIALS | PAGE NO | PART NUMBER | DESCRIPTION |
|---|---|---|---|---|
| A/R | | 222.1.0 | | WIRING |
| 1 | | | 27826 | PLUG |
| 1 | | | 27825 | PLUG |
| 2 | | | 28822 | PLUG |
| -226 | | | -226 | CABLE ASSY |

LIST OF MATERIALS

CESSNA AIRCRAFT CO COMMERCIAL AIRCRAFT DIVISION, WICHITA, KANSAS

DIMENSIONS ARE IN INCHES
TOLERANCES ARE
DEC MALS: 00 · 03 MACH; 000 · 00 ± 0.30
ANGLES: FORMED ±2°
DO NOT SCALE PRINT
(ES 1000 IS APPLICABLE

| | NAME | DATE |
|---|---|---|
| DRAWN | G WOOD | 8-15-69 |
| GROUP | | |
| CHECK | R. Stuck | 11-12-69 |
| STRESS | RSHAP | 11-12-69 |
| PRO | K. Wise | 11-10-69 |

CABLE ASSEMBLY-
CESSNA NAV/OMNI
500
(ARC TYPE 319G)

Cessna.

DWG NO. 0770400

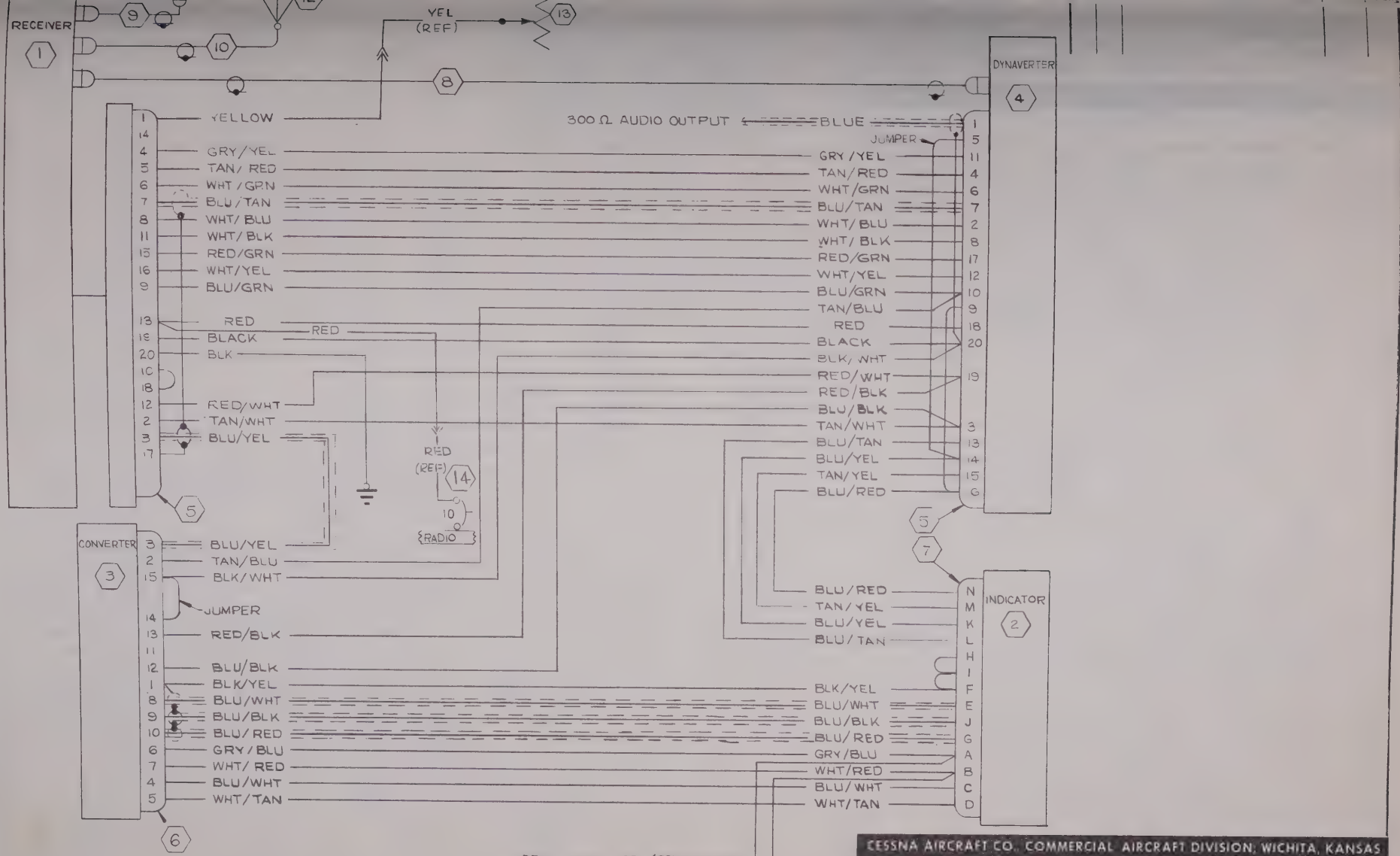


CESSNA AIRCRAFT CO., COMMERCIAL AIRCRAFT DIVISION, WICHITA, KANSAS

| | NAME | DATE |
|---|---|---|
| DRAWN | [illegible] K | 1-11-64 |
| GROUP | | |
| CHECK | | |
| STRESS | [illegible] | |
| PRO. | | |

WIRING DIAGRAM
CESSNA NAV/OMNI 500
(ARC TYPE 3196)

Cessna

DWG. NO. 0770400

SUPERSEDED BY | SUPERSEDES | MODEL 180 & 185 | REV. | PAGE 2.22.1.1

NOTES:
1. ITEMS 6, 7, & 8 ARE SUPPLIED AS PART OF KN-60 INSTL KIT NO. 050-1052-00.

| CHG LET | REVISION | BY DATE | CHK APPD |
|---|---|---|---|
| | | | |

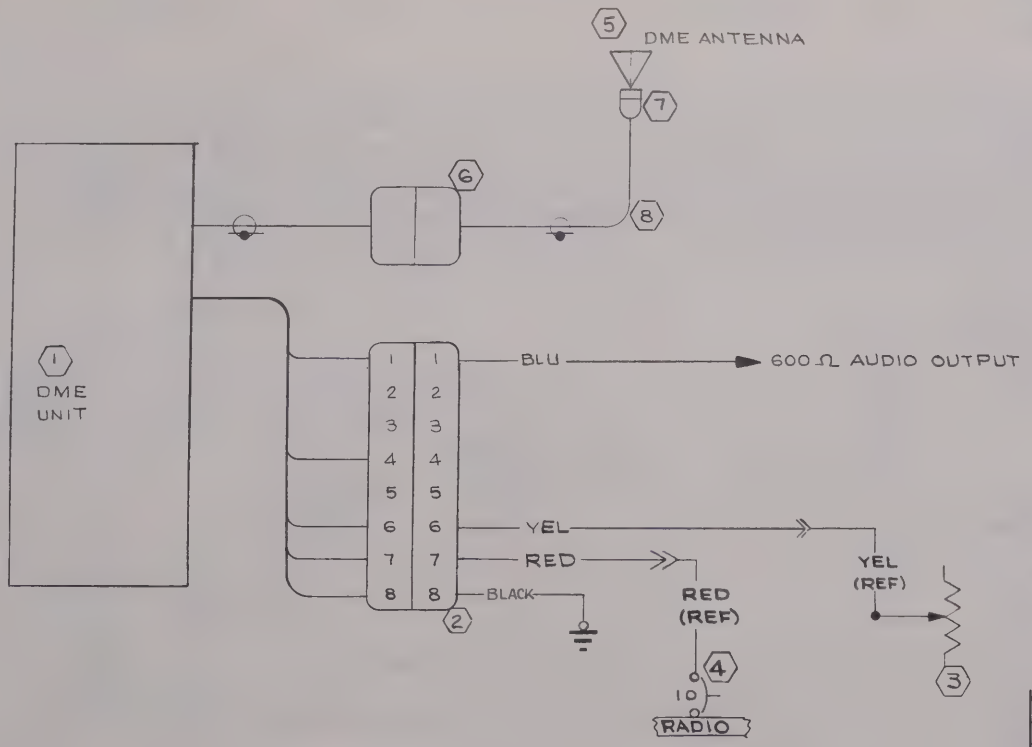


| | | | | | | | |
|---|---|---|---|---|---|---|---|
| BLU | 22 | -22-6 | | SOLDER | | | |
| RED | 16 | -16-2 | | ↕ | S-341-1 | | |
| YEL | 18 | -18-4 | | ↕ | S-341-2 | | |
| BLACK | 6 | -16-0 | | SOLDER | S-1367-2-8 | | |
| WIRE CODE NO. | GA | MATERIAL | LG | TERMINALS | | | SERIALS |

WIRE TABLE

| | | |
|---|---|---|
| 8 | 024-0001-00 | R.F. CABLE (KG) |
| 7 | 030-24-00 | CONNECTOR RT ANGLE (KG) |
| 6 | 030-0021-01 | CONNECTOR (KG) |
| 5 | KA-15 | ANTENNA (KG) |
| 4 | S-1360-10 | CIRCUIT BKR |
| 3 | 0413126-5 | RHEOSTAT |
| 2 | 030-2043-00 | CONNECTOR (KG) |
| 1 | KN-60 | DME UNIT (KG) |

CESSNA AIRCRAFT CO., COMMERCIAL AIRCRAFT DIVISION, WICHITA, KANSAS

| | NAME | DATE |
|---|---|---|
| DRAWN | BREEN | 8-30-64 |
| GROUP | W. Ipsen | 11-25-64 |
| CHECK | R. Stark | 11-20-64 |
| PROJ | K. Wood | 11-2-64 |

TITLE: WIRING DIAGRAM — KING KN-60 DME

Cessna.

DWG NO. 0770400

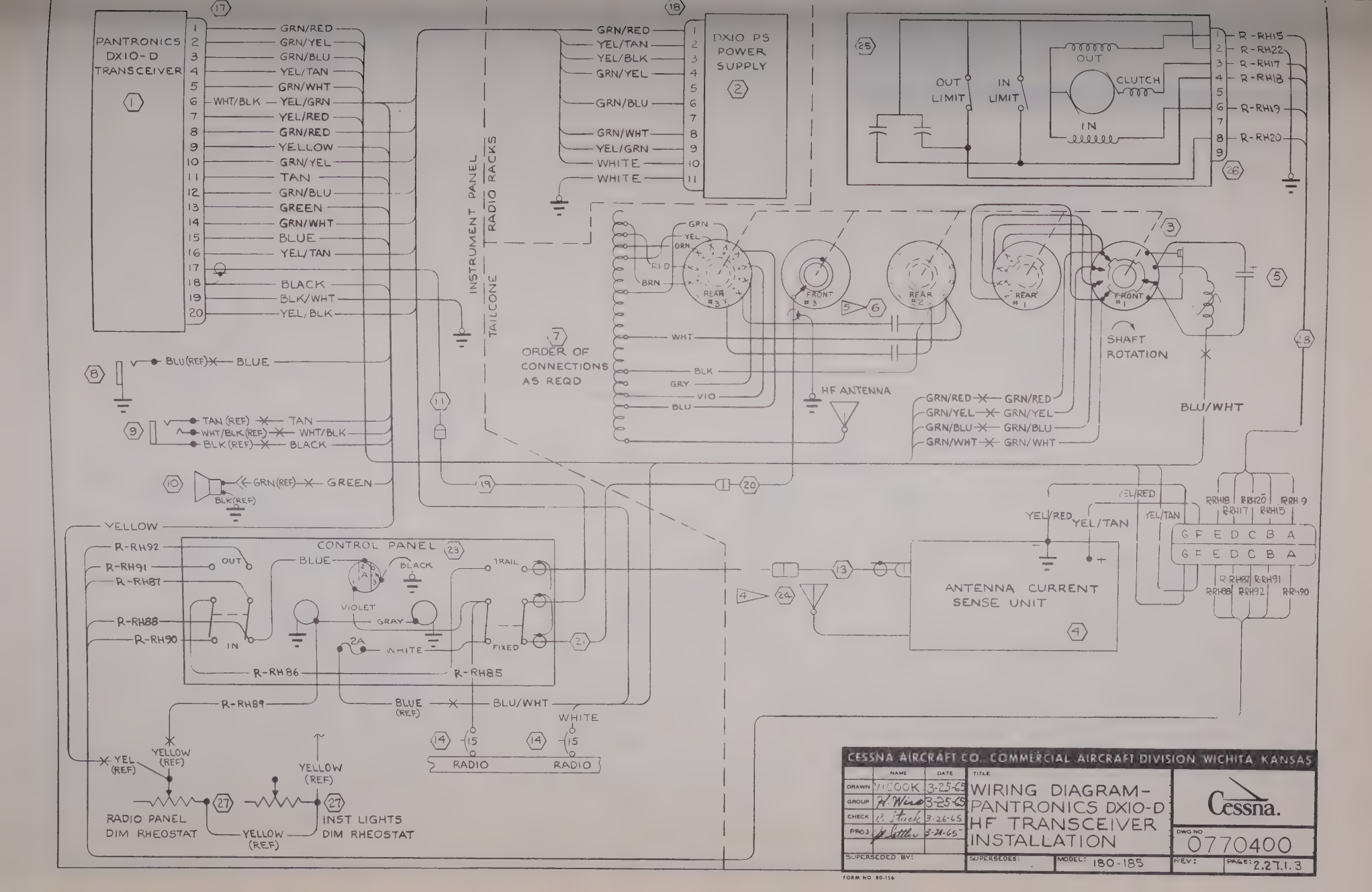
PANTRONICS DX10-D TRANSCEIVER
DX10 PS POWER SUPPLY
INSTRUMENT PANEL
RADIO RACKS
TAILCONE
ORDER OF CONNECTIONS AS REQD
HF ANTENNA
SHAFT ROTATION
CONTROL PANEL
ANTENNA CURRENT SENSE UNIT
RADIO PANEL DIM RHEOSTAT
INST LIGHTS DIM RHEOSTAT
OUT LIMIT
IN LIMIT
CLUTCH
OUT
IN
REAR #3
FRONT #3
REAR #2
REAR #1
FRONT #1
GRN/RED
GRN/YEL
GRN/BLU
YEL/TAN
GRN/WHT
WHT/BLK
YEL/GRN
YEL/RED
YELLOW
TAN
GREEN
BLUE
BLACK
BLK/WHT
YEL/BLK
BLU(REF)
TAN (REF)
WHT/BLK(REF)
BLK(REF)
GRN(REF)
YEL/BLK
WHITE
R-RH15
R-RH22
R-RH17
R-RH18
R-RH19
R-RH20
R-RH92
R-RH91
R-RH87
R-RH88
R-RH90
R-RH86
R-RH85
R-RH89
BLUE (REF)
BLU/WHT
YEL (REF)
YELLOW (REF)
RADIO
RADIO
G F E D C B A
R-RH87
R-RH91
R-RH88
R-RH92
R-RH90
CESSNA AIRCRAFT CO. COMMERCIAL AIRCRAFT DIVISION WICHITA KANSAS
NAME
DATE
DRAWN
GROUP
CHECK
PROJ
3-25-65
3-26-65
3-24-65
TITLE
WIRING DIAGRAM-PANTRONICS DX10-D HF TRANSCEIVER INSTALLATION
Cessna.
DWG NO
0770400
SUPERSEDED BY:
SUPERSEDES:
MODEL: 180-185
REV:
PAGE: 2.27.1.3
FORM NO 80-156

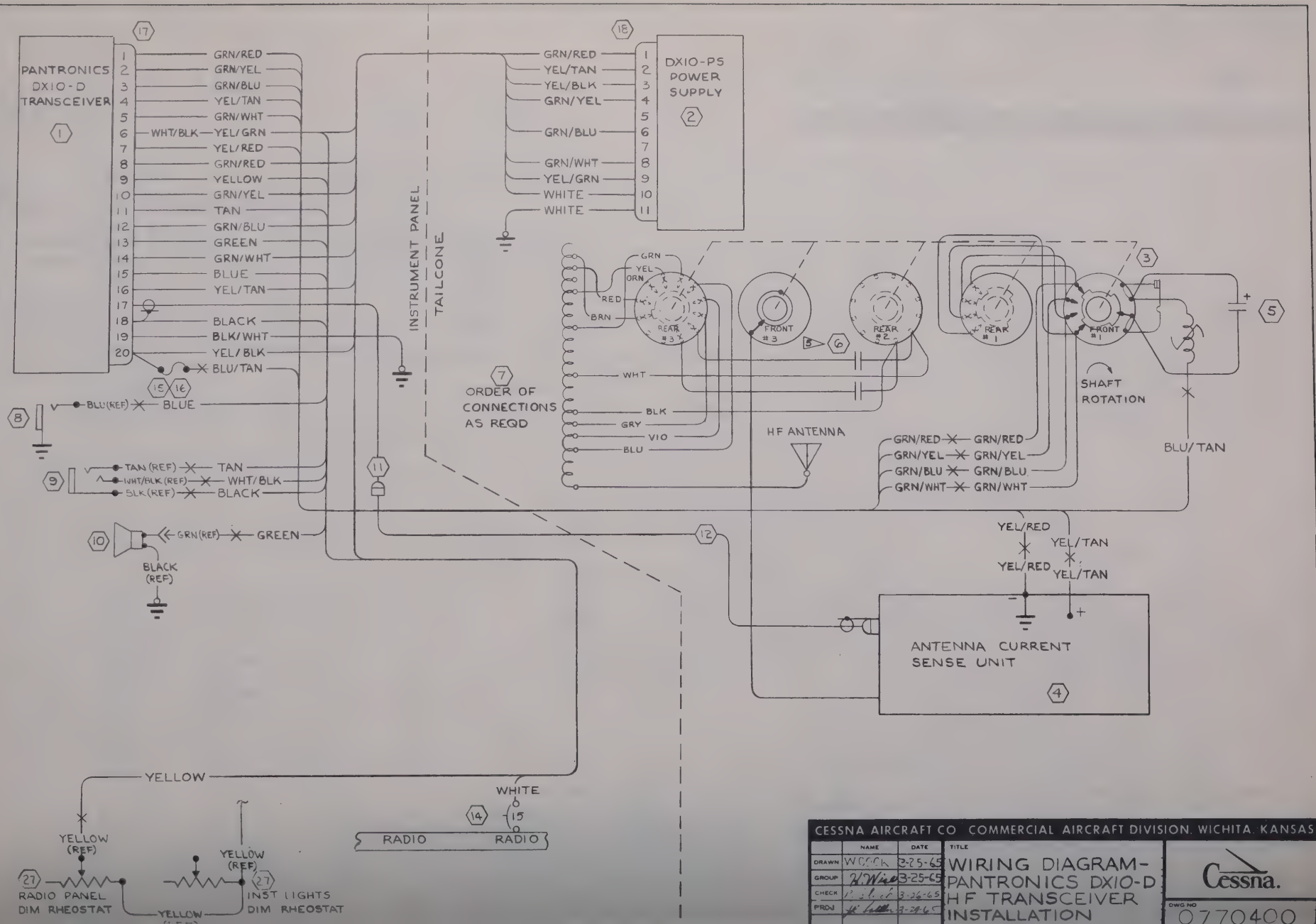


| CESSNA AIRCRAFT CO COMMERCIAL AIRCRAFT DIVISION, WICHITA, KANSAS | | | | |
|---|---|---|---|---|
| | NAME | DATE | TITLE | |
| DRAWN | WCOCH | 3-25-65 | WIRING DIAGRAM- PANTRONICS DX10-D HF TRANSCEIVER INSTALLATION | Cessna. |
| GROUP | K Wire | 3-25-65 | | |
| CHECK | | 3-26-65 | | DWG NO 0770400 |
| PROJ | | 3-29-65 | | |

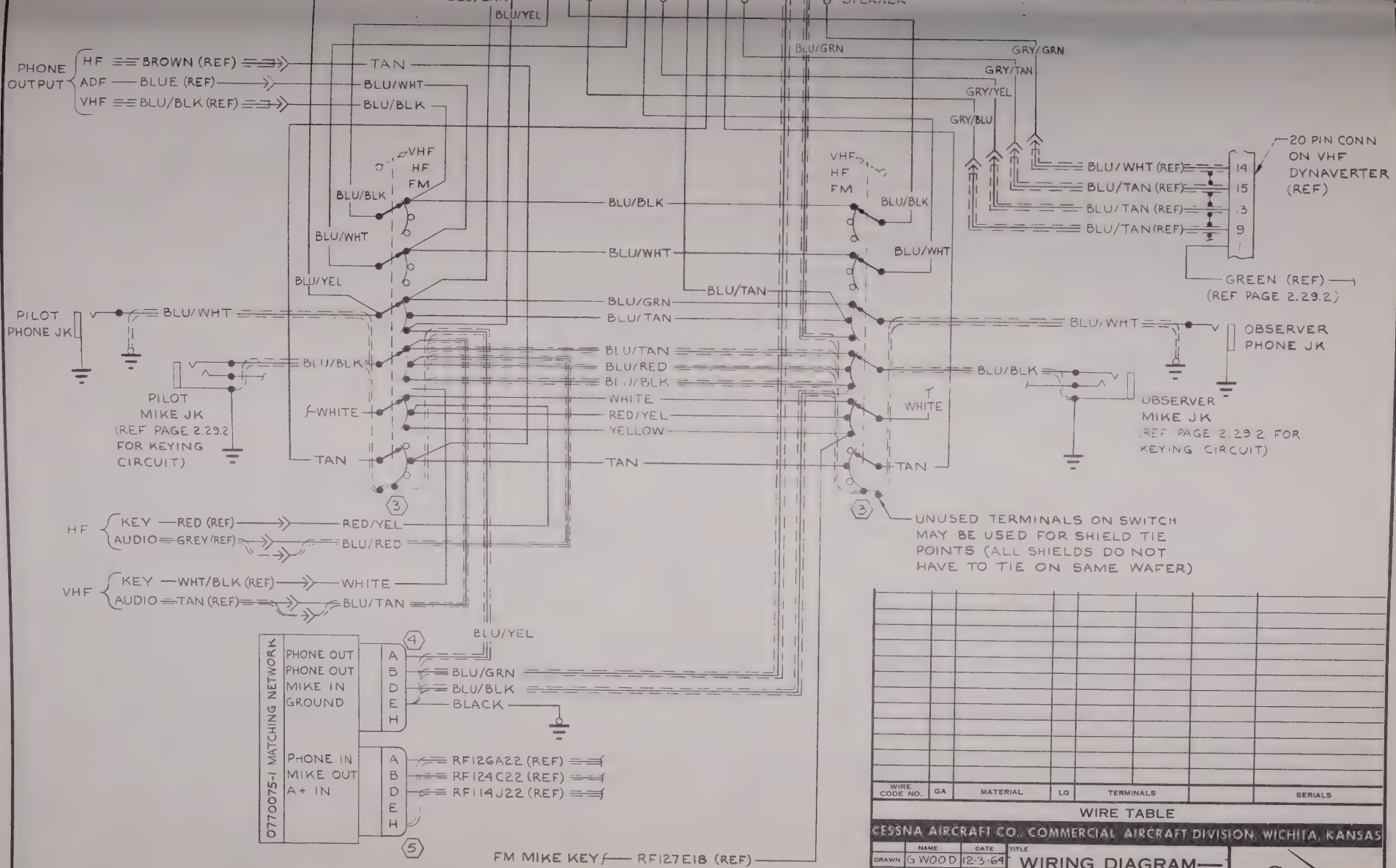


| WIRE CODE NO. | GA | MATERIAL | LG | TERMINALS | | SERIALS |
|---|---|---|---|---|---|---|

WIRE TABLE

CESSNA AIRCRAFT CO., COMMERCIAL AIRCRAFT DIVISION, WICHITA, KANSAS

| | NAME | DATE |
|---|---|---|
| DRAWN | G WOOD | 12-3-64 |
| GROUP | V. Tennant | 1-21-65 |
| CHECK | R. Stuck | 1-20-65 |
| PROJ | J. Wise | -18-65 |
| | H. Settle | 1-22-65 |

TITLE
WIRING DIAGRAM—
TRANSMITTER & AUDIO
SELECTOR SWITCHING
FOR VHF, ADF, HF & AN/ARC44

Cessna®

DWG NO: 0770400

SUPERSEDED BY: | SUPERSEDES: | MODEL: 185 | REV: | PAGE: 2.29.1

| ITEM NO | PART NO. | DESCRIPTION | INSTALLED ON |
|---|---|---|---|

EQUIPMENT TABLE

FORM NO 80-161A

| CHG LET | REVISION | BY DATE | CHK APPD |
|---|---|---|---|
| | | | |

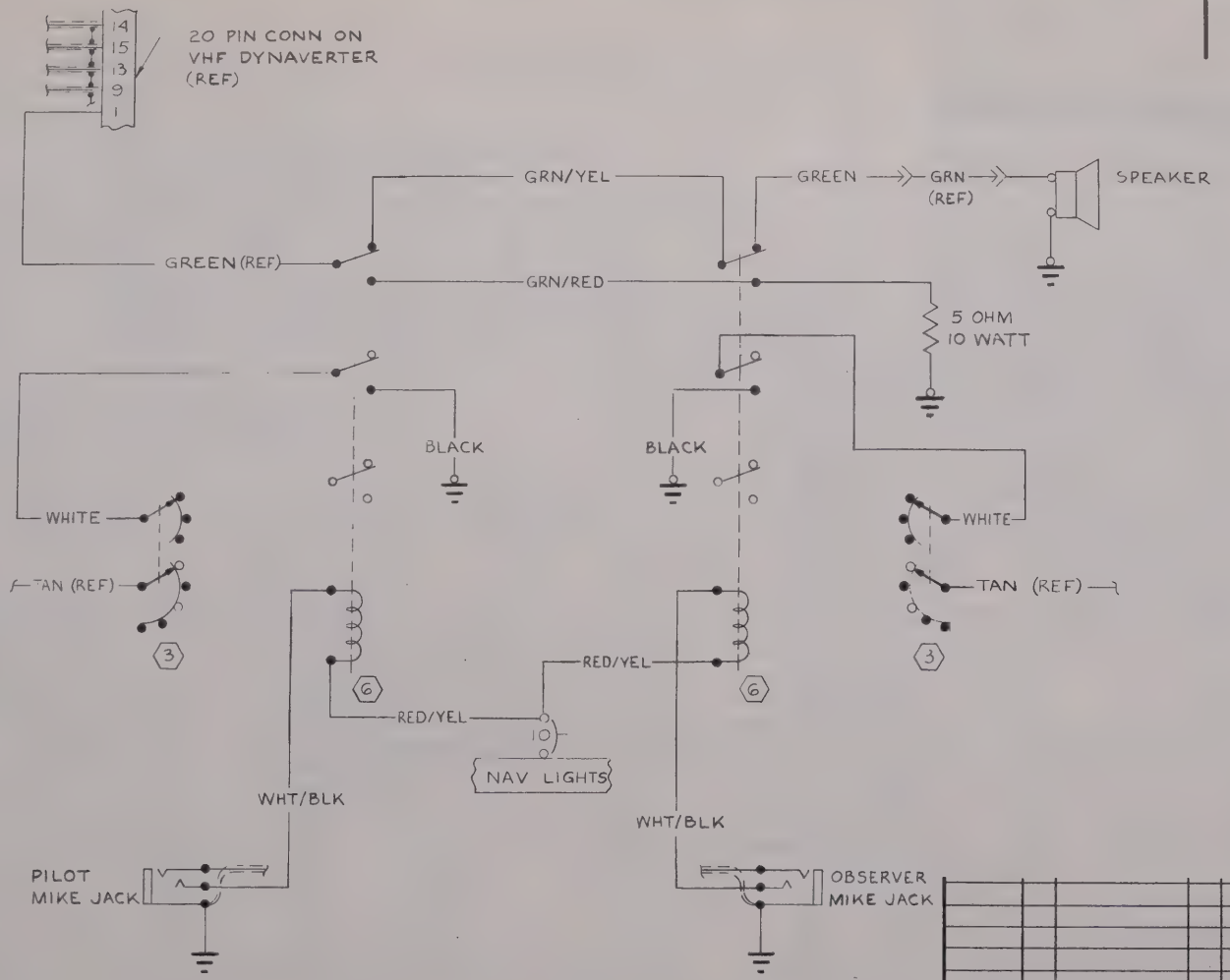


| WIRE CODE NO. | GA | MATERIAL | LG | TERMINALS | | SERIALS |
|---|---|---|---|---|---|---|
| | | | | | | |

WIRE TABLE

CESSNA AIRCRAFT CO., COMMERCIAL AIRCRAFT DIVISION, WICHITA, KANSAS

| | NAME | DATE |
|---|---|---|
| DRAWN | | |
| TRACED | | |
| ENGR APPD | | |

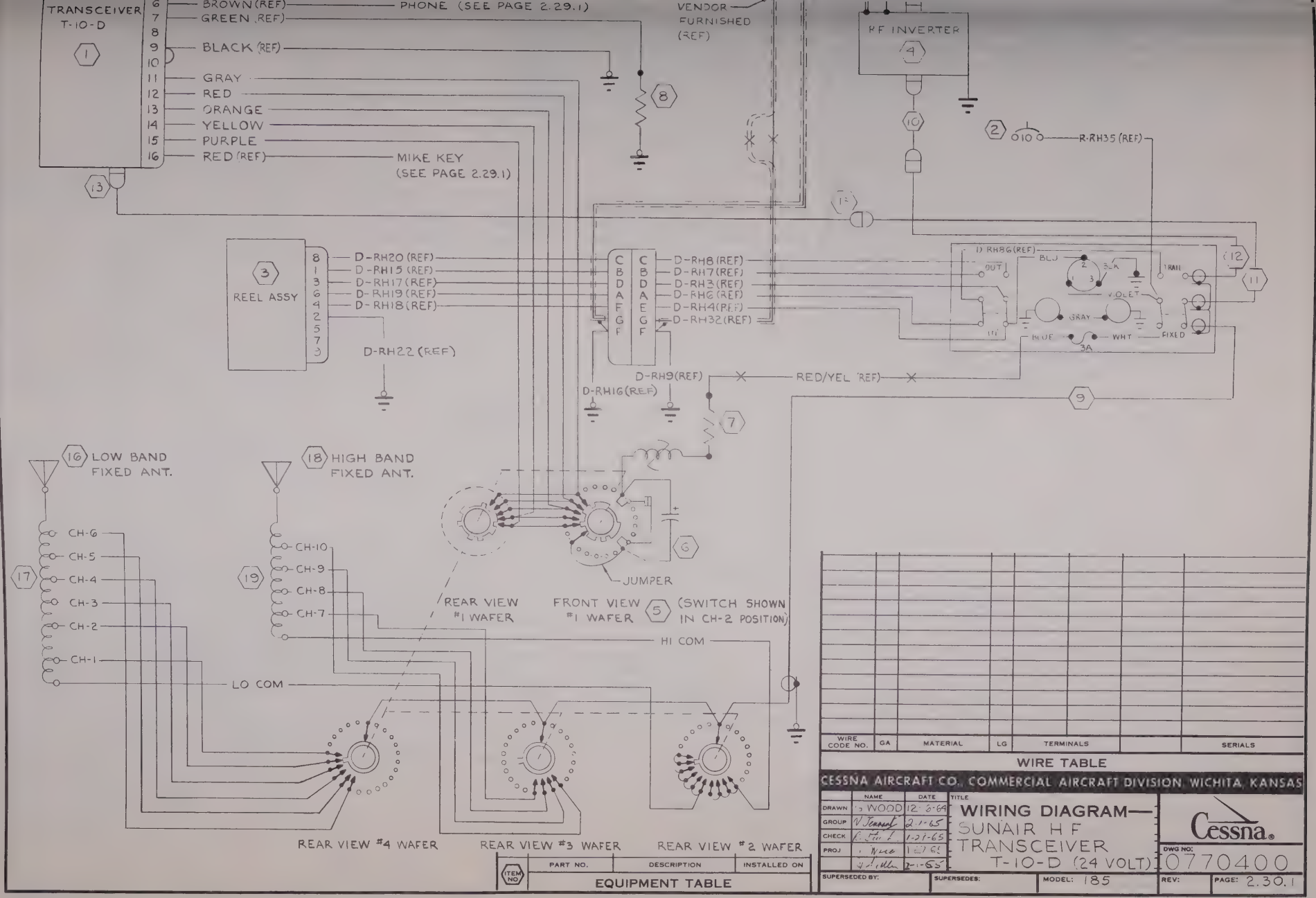


| ITEM NO | PART NO. | DESCRIPTION | INSTALLED ON |
|---|---|---|---|

EQUIPMENT TABLE

| WIRE CODE NO. | GA | MATERIAL | LG | TERMINALS | | SERIALS |
|---|---|---|---|---|---|---|

WIRE TABLE

CESSNA AIRCRAFT CO., COMMERCIAL AIRCRAFT DIVISION, WICHITA, KANSAS

| | NAME | DATE |
|---|---|---|
| DRAWN | G WOOD | 12-6-64 |
| GROUP | V Tennant | 2-1-65 |
| CHECK | [illegible] | 1-21-65 |
| PROJ | [illegible] | 1-27-65 |
| | [illegible] | 2-1-65 |

TITLE: WIRING DIAGRAM— SUNAIR H F TRANSCEIVER T-10-D (24 VOLT)

Cessna®

DWG NO: 0770400

SUPERSEDED BY: | SUPERSEDES: | MODEL: 185 | REV: | PAGE: 2.30.1

FORM NO 80-161A

(SR4811)

NOTES:

1. ALL WIRE MATERIAL PER S-1460 EXCEPT AS NOTED.
2. GONIOMETER - INDICATOR & LOOP ANT. CONNECTIONS SHOWN ARE FOR BOTTOM - MOUNTED LOOP ANTENNA & TOP - MOUNTED SENSE ANTENNA.

| CHG LET | REVISION | BY / DATE | CHK / APPD |
|---|---|---|---|
| A | BLACK WIRE WAS TO PIN C ITEM 8 NOW TO PIN K · WAS 16 GA NOW 22 GA ADDED ITEM 14, A-263 CHOKE. ON RED WIRE S-1370-2 WAS S-341-1 | 9-29-65 | |

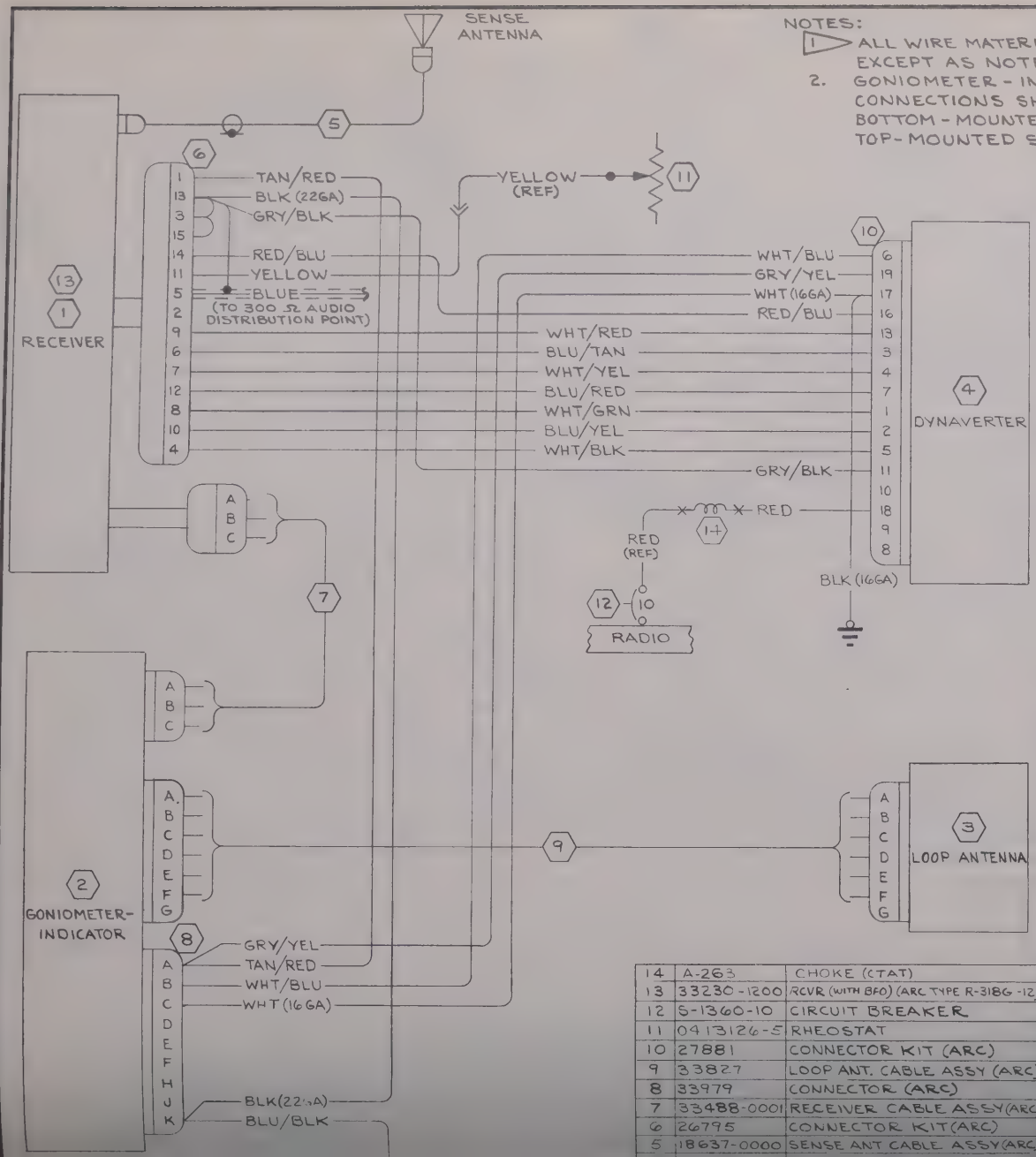


| | | | | | | | |
|---|---|---|---|---|---|---|---|
| BLACK | 16 | -16-0 | | SOLDER | S-1367-2-8 | | |
| RED | 16 | -16-2 | | | S-1370-2 | | |
| WHT/BLK | 22 | -22-9-0 | | | SOLDER | | |
| BLU/YEL | 22 | -22-6-4 | | | | | |
| WHT/GRN | 22 | -22-9-5 | | | | | |
| BLU/RED | 22 | -22-6-2 | | | | | |
| WHT/YEL | 22 | -22-9-4 | | | | | |
| BLU/TAN | 22 | -22-6-10 | | | | | |
| WHT/RED | 22 | -22-9-2 | | | | | |
| GRY/BLK | 22 | -22-8-0 | | | | | |
| RED/BLU | 16 | -16-2-6 | | | SOLDER | | |
| YELLOW | 20 | -20-4 | | | S-341-2 | | |
| BLUE | 22S | S-1461-22-6 | | | | | |
| GRY/YEL | 22 | -22-8-4 | | | SOLDER | | |
| TAN/RED | 22 | -22-10-2 | | | | | |
| WHT/BLU | 22 | -22-9-6 | | | | | |
| BLACK | 22 | -22-0 | | | | | |
| WHITE | 16 | -16-9 | | | SOLDER | | |
| BLU/BLK | 22 | -22-6-0 | | SOLDER | S-1367-1-8 | | |
| WIRE CODE NO. | GA | MATERIAL | LG | TERMINALS | | | SERIALS |

1 WIRE TABLE

| | | |
|---|---|---|
| 14 | A-263 | CHOKE (CTAT) |
| 13 | 33230-1200 | RCVR (WITH BFO) (ARC TYPE R-318G-12) |
| 12 | S-1360-10 | CIRCUIT BREAKER |
| 11 | 0413126-5 | RHEOSTAT |
| 10 | 27881 | CONNECTOR KIT (ARC) |
| 9 | 33827 | LOOP ANT. CABLE ASSY (ARC) |
| 8 | 33979 | CONNECTOR (ARC) |
| 7 | 33488-0001 | RECEIVER CABLE ASSY (ARC) |
| 6 | 26795 | CONNECTOR KIT (ARC) |
| 5 | 18637-0000 | SENSE ANT CABLE ASSY (ARC) |

CESSNA AIRCRAFT CO. COMMERCIAL AIRCRAFT DIVISION, WICHITA, KANSAS

NAME | DATE | TITLE

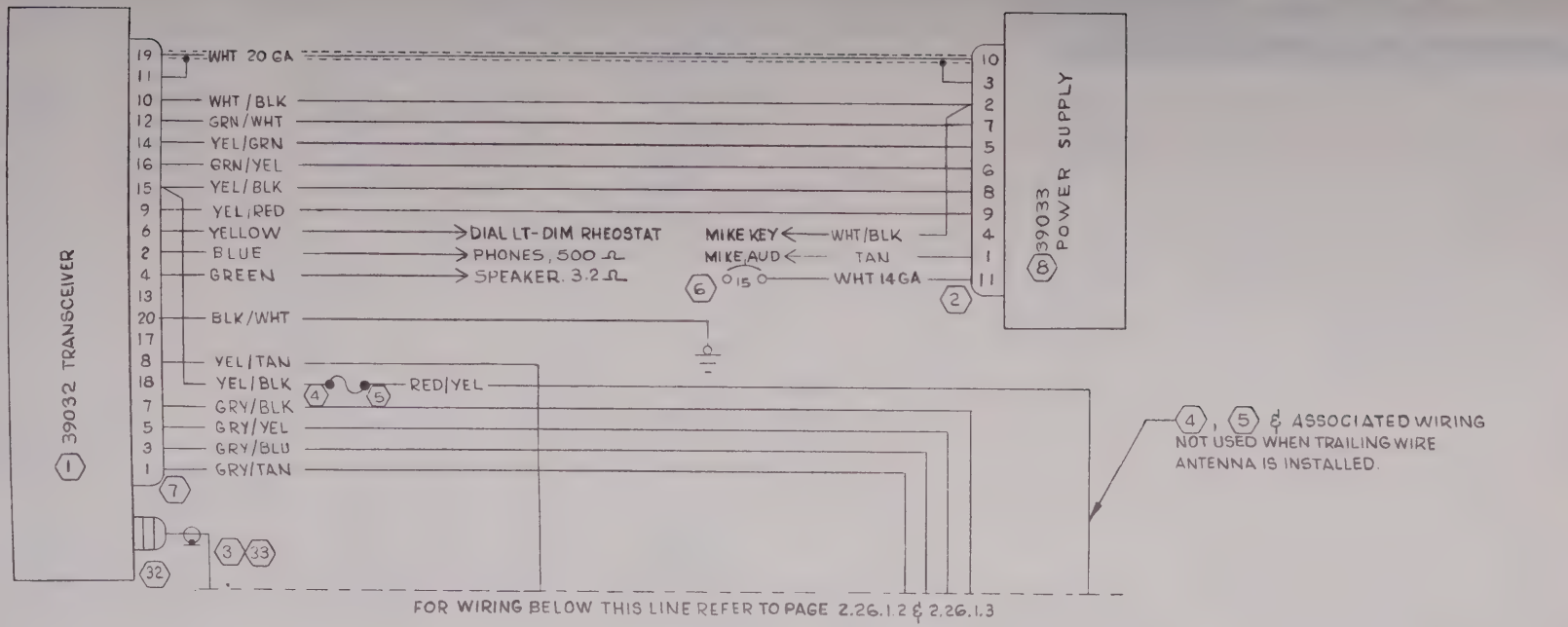


FOR WIRING BELOW THIS LINE REFER TO PAGE 2.26.1.2 & 2.26.1.3

| WIRE CODE NO. | GA | MATERIAL | LG | TERMINALS | | | SERIALS |
|---|---|---|---|---|---|---|---|

WIRE TABLE

CESSNA AIRCRAFT CO. COMMERCIAL AIRCRAFT DIVISION, WICHITA, KANSAS

| | NAME | DATE |
|---|---|---|
| DRAWN | W COOK | 3-25-65 |
| GROUP | H. Wise | 3-25-65 |
| CHECK | R. Stuck | 3-29-65 |
| PROJ | JRS | 4-27-65 |

TITLE: WIRING DIAGRAM — PANTRONICS DX10-DA

Cessna.

DWG NO 0770400

| SUPERSEDED BY | SUPERSEDES | MODEL 180-185 | REV. | PAGE 2.32.1.1 |
|---|---|---|---|---|

| ITEM NO | PART NO. | DESCRIPTION | INSTALLED ON |
|---|---|---|---|

EQUIPMENT TABLE

FORM NO. 80-161

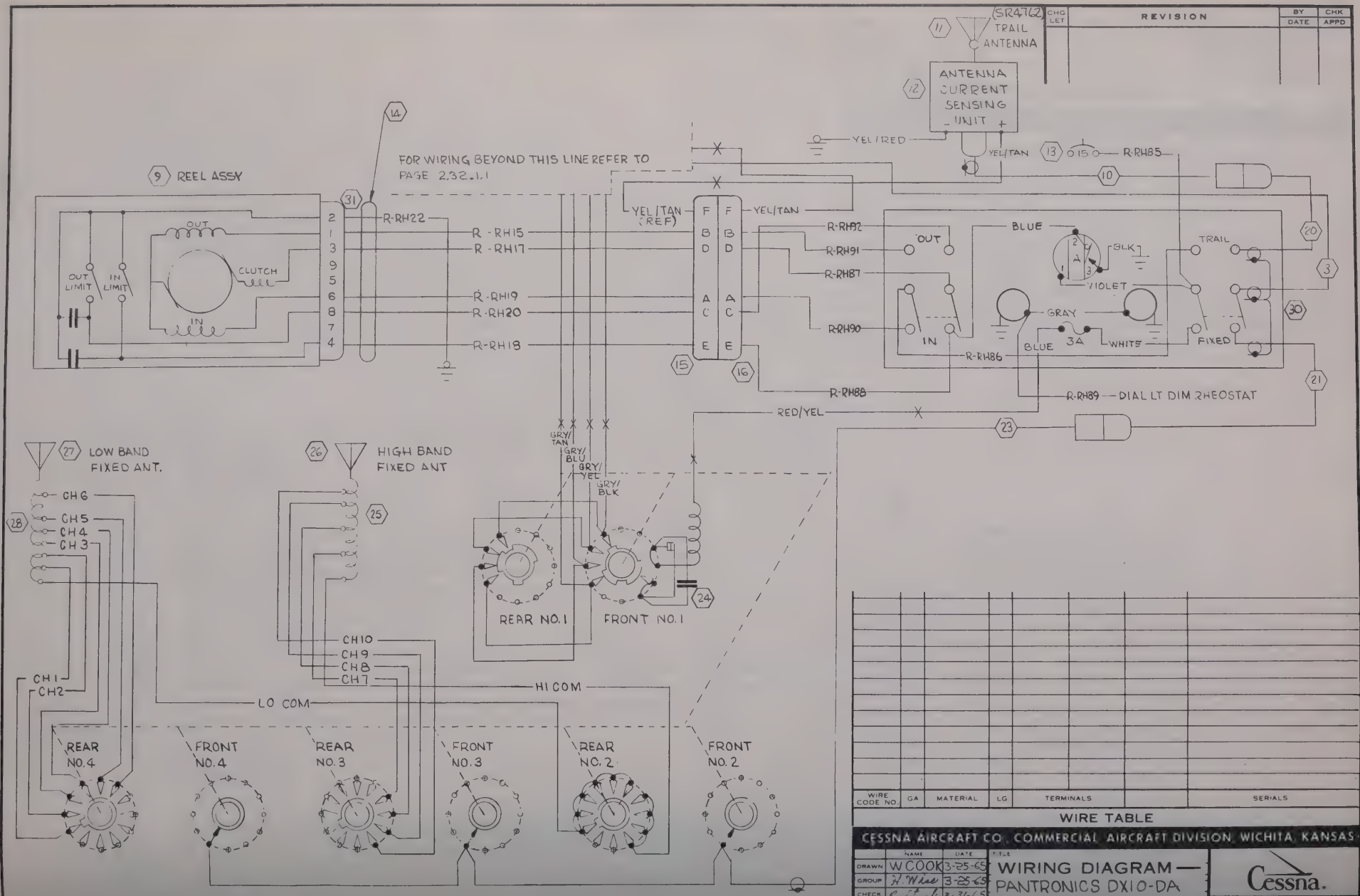


| CHG LET | REVISION | BY / DATE | CHK / APPD |
|---|---|---|---|

| WIRE CODE NO. | GA | MATERIAL | LG | TERMINALS | | SERIALS |
|---|---|---|---|---|---|---|

WIRE TABLE

CESSNA AIRCRAFT CO., COMMERCIAL AIRCRAFT DIVISION, WICHITA, KANSAS

| | NAME | DATE |
|---|---|---|
| DRAWN | W COOK | 3-25-65 |
| GROUP | H. Wise | 3-25-65 |
| CHECK | R Stuck | 3-31-65 |
| PROJ | JRS N 7 | 4 27 65 |

TITLE: WIRING DIAGRAM — PANTRONICS DX10-DA

Cessna.

DWG NO 0770400

| PART NO | DESCRIPTION | INSTALLED ON |
|---|---|---|

FOR WIRING ABOVE THIS LINE REFER TO PAGE 2.32.1.1

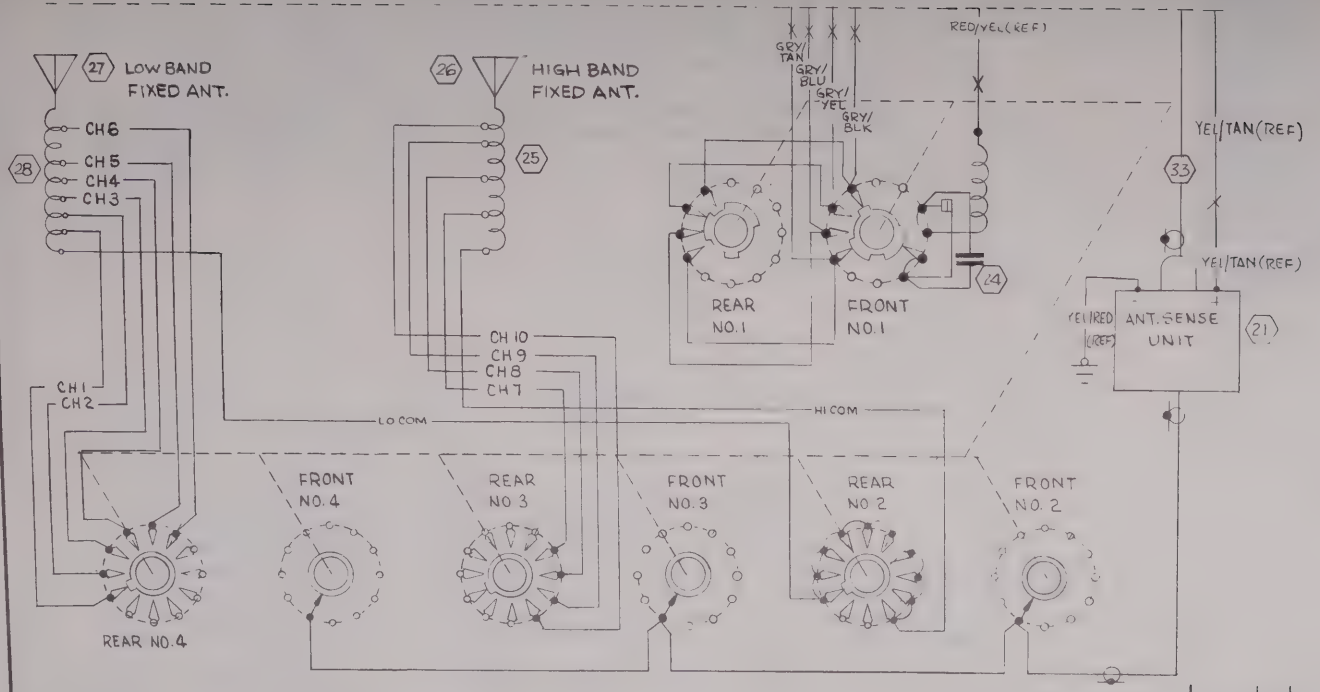


29 SWITCH
(SHOWN IN CHANNEL 1 POS)
(WAFERS SHOWN AS VIEWED FROM MOTOR SIDE)

| WIRE CODE NO. | GA | MATERIAL | LG | TERMINALS | | SERIALS |
|---|---|---|---|---|---|---|
| | | | | | | |

WIRE TABLE

| ITEM NO | PART NO. | DESCRIPTION | INSTALLED ON |
|---|---|---|---|
| | | | |

EQUIPMENT TABLE

CESSNA AIRCRAFT CO., COMMERCIAL AIRCRAFT DIVISION, WICHITA, KANSAS

| | NAME | DATE |
|---|---|---|
| DRAWN | W COOK | 3-25-65 |
| GROUP | H. Wise | 3-25-65 |
| CHECK | R. Stuck | 3-31-65 |
| PROJ | JRS NT | 4-27-5 |

TITLE: WIRING DIAGRAM — PANTRONICS DX10-DA

Cessna

DWG NO. 0770400

| SUPERSEDED BY: | SUPERSEDES | MODEL: 180-185 | REV: A | PAGE: 2.32.1.3 |
|---|---|---|---|---|

FORM NO. 80-161

(SR4664)
(SR4665)

| CHG LET | REVISION | BY / DATE | CHK / APPD |
|---|---|---|---|
| | | | |

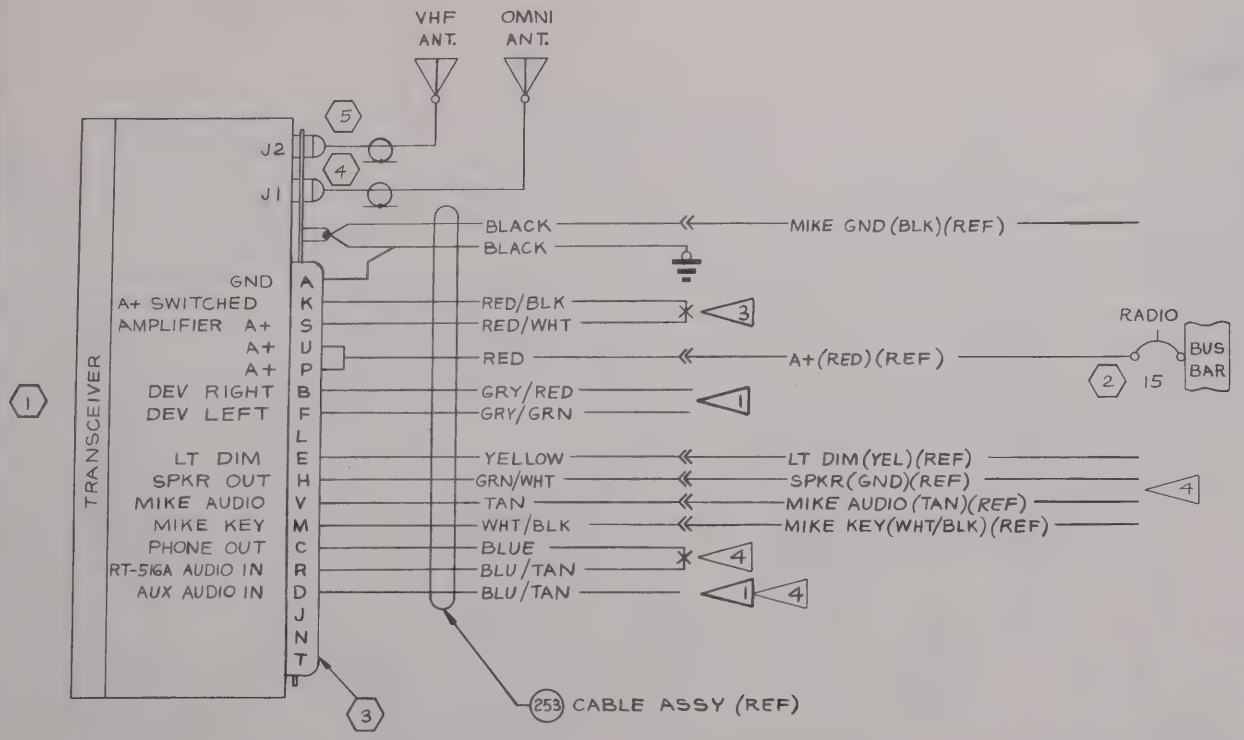


NOTES:

1. WIRES NOT USED SHALL BE CAPPED AND TIED INTO A BUNDLE
2. WIRE MATERIAL PER S-1460
3. WHEN THIS SET IS INSTALLED AS A SINGLE RADIO, CONNECT PINS "S" & "K" TOGETHER AS SHOWN. WHEN INSTALLED IN CONJUNCTION WITH ANOTHER RADIO SET SUCH AS AN ADF OR A NAV-OMNI, CONNECT PIN "S" TO A SEPARATE S-1360-5 "AUD AMP" CKT BKR.
4. REFER TO PAGE 2.0.1-2.04 FOR TRANSMITTER AND AUDIO SWITCHING CIRCUITS WHEN THIS RADIO IS COMBINED WITH OTHER RADIOS.

| WIRE CODE NO. | GA | MATERIAL | LG | TERMINALS | | SERIALS |
|---|---|---|---|---|---|---|
| BLU/TAN | 22 | -22-6-10 | | SOLDER | S-1557-1 | |
| BLU/TAN | 22 | -22-6-10 | | | S-1370-1 | |
| BLUE | 22 | -22-6 | | | | |
| WHT/BLK | 22 | -22-9-0 | | | S-341-2 | |
| TAN | 22 | -22-10 | | | | |
| GRN/WHT | 20 | -20-5-9 | | | | |
| YELLOW | 18 | -18-4 | | | S-341-2 | |
| GRY/GRN | 22 | -22-8-5 | | | S-1557-1 | |
| GRY/RED | 22 | -22-8-2 | | | S-1557-1 | |
| RED | 16 | -16-2 | | | S-341-1 | |
| RED/BLK | 18 | -18-2-0 | | | S-1370-1 | |
| RED/WHT | 18 | -18-2-9 | | | | |
| BLACK | 16 | -16-0 | | | S-1367-1-10 | |
| BLACK | 22 | -22-0 | | SOLDER | S-341-2 | |

2 WIRE TABLE

CESSNA AIRCRAFT CO., COMMERCIAL AIRCRAFT DIVISION, WICHITA, KANSAS

| | | | |
|---|---|---|---|
| 5 | 29753 | CONNECTOR (ARC) | |

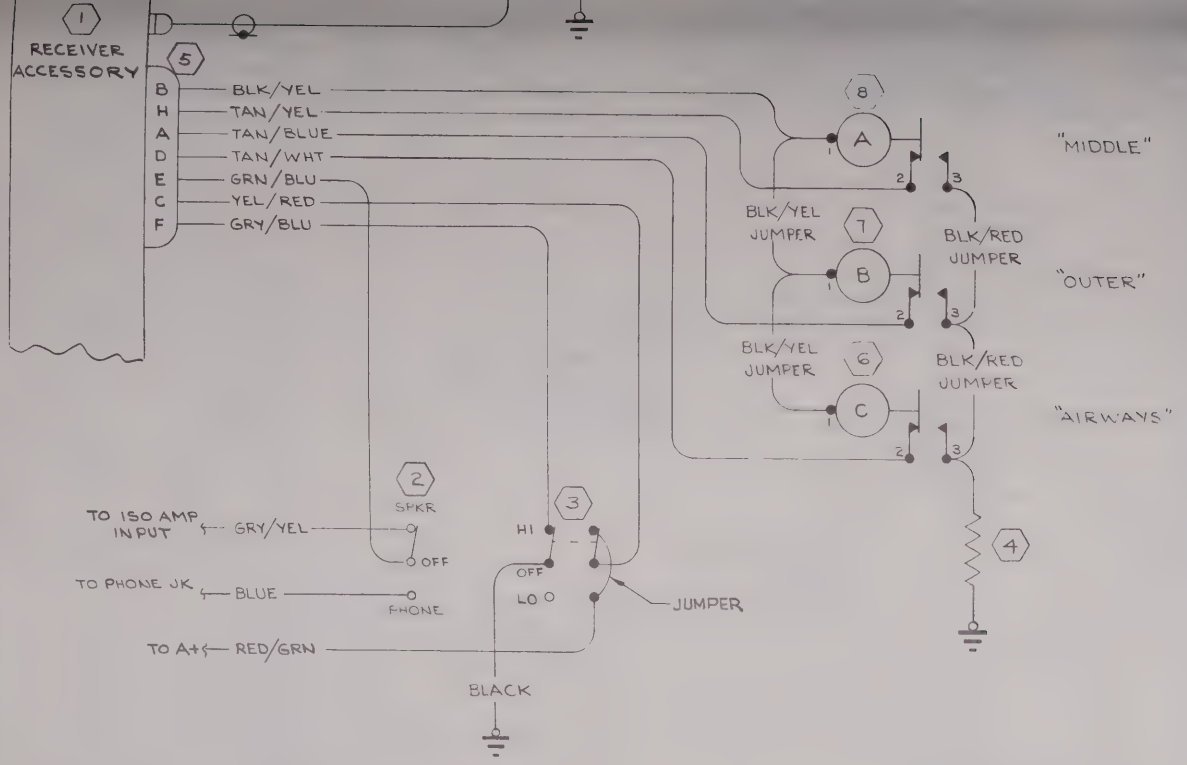


NOTES:

1. WIRE MATERIAL PER S-1460.

| ITEM NO. | PART NO. | DESCRIPTION | INSTALLED ON |
|---|---|---|---|
| 8 | MS25041-4-328 | LIGHT ASSY | |
| 7 | MS25041-10 328 | LIGHT ASSY | |
| 6 | MS25041-1-328 | LIGHT ASSY | |
| 5 | 28371-0007 | CONNECTOR | (ARC) |
| 4 | 4 Ω, 3 WATT | RESISTOR (OM) | |
| 3 | MST-205P | SWITCH | (AELM) |
| 2 | S-382-1 | SWITCH | |
| 1 | 32980-0014 | RCVR ACCESSORY | (ARC) |

EQUIPMENT TABLE

| WIRE CODE NO. | GA | MATERIAL | LG | TERMINALS | | SERIALS |
|---|---|---|---|---|---|---|
| BLUE | 22 | -22-6 | | S-1367-1-6 | | |
| BLACK | 22 | -22-0 | | SOLDER | S-1367-1-8 | |
| RED/GRN | 20 | -20-2-5 | | S-1367-1-6 | | |
| GRY/YEL | 22 | -22-8-4 | | S-1367-1-6 | | |
| GRY/BLU | 22 | -22-8-6 | | SOLDER | SOLDER | |
| YEL/RED | 20 | -20-4-2 | | | SOLDER | |
| GRN/BLU | 20 | -20-5-6 | | | S-1367-1-6 | |
| TAN/WHT | 22 | -22-10-9 | | | SOLDER | |
| TAN/BLU | 22 | -22-10-6 | | | | |
| TAN/YEL | 22 | -22-10-4 | | | | |
| BLK/YEL | 22 | -22-0-4 | | SOLDER | SOLDER | |

1 WIRE TABLE

CESSNA AIRCRAFT CO. COMMERCIAL AIRCRAFT DIVISION, WICHITA, KANSAS

| | NA. | DATE |
|---|---|---|
| DRAWN | W COOK | 5-17-65 |
| GROUP | W Wire | 5-19-65 |
| CHECK | | |
| PROJ | W Webb | 5-25-65 |

TITLE: WIRING DIAGRAM— MARKER BEACON CESSNA NAV/OMNI 300 (ARC TYPE 525A)

Cessna

DWG NO: 0770400

SUPERSEDED BY: | SUPERSEDES: | MODEL: 180-185 | REV: | PAGE: 2.35.1

FORM NO 80-161A

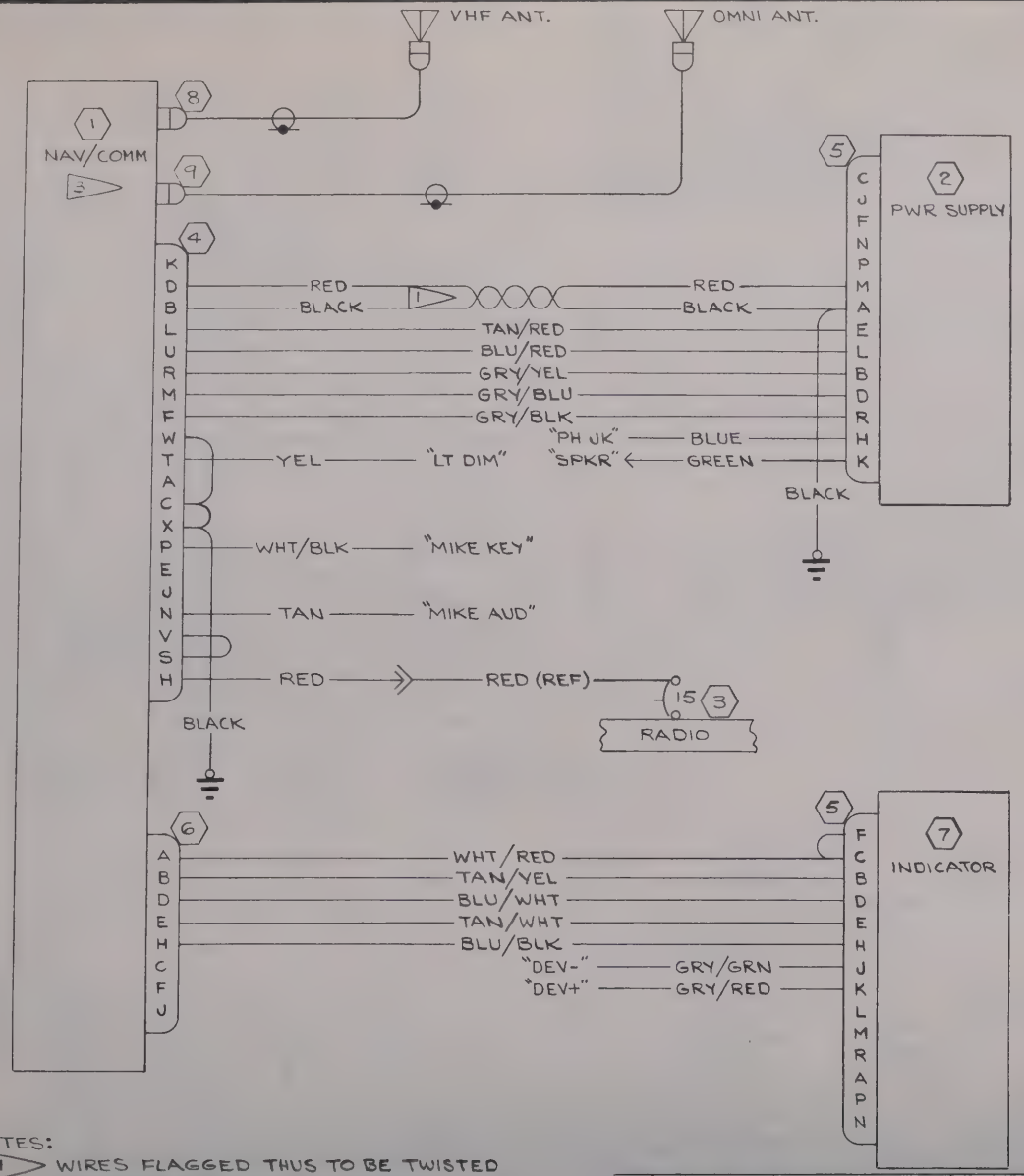


NOTES:

1. WIRES FLAGGED THUS TO BE TWISTED TOGETHER TO FORM A TWISTED PAIR.
2. WIRE MATERIAL PER S-1460.
3. THE KX-170B PANEL UNIT INCLUDES A 14 PIN CONNECTOR FOR DME CHANNELING

| | | | |
|---|---|---|---|
| 9 | 030-6028-00 | CONNECTOR (KG) | |
| 8 | 030-0005-00 | CONNECTOR (KG) | |
| 7 | KI-201 | INDICATOR (KG) | |
| 6 | 030-2044-00 | CONNECTOR (KG) | |
| 5 | 030-2000-00 | CONNECTOR (KG) | |

(SR4664)
(SR4665)

| CHG LET | REVISION | BY DATE | CHK APPD |
|---|---|---|---|
| | | | |

| WIRE CODE NO. | GA | MATERIAL | LG | TERMINALS | | SERIALS |
|---|---|---|---|---|---|---|
| GRY/RED | 22 | -22-8-2 | | SOLDER | S-1557-1 | |
| GRY/GRN | 22 | -22-8-5 | | | S-1557-1 | |
| BLU/BLK | 22 | -22-6-0 | | | SOLDER | |
| TAN/WHT | 22 | -22-10-9 | | | | |
| BLU/WHT | 22 | -22-6-9 | | | | |
| TAN/YEL | 22 | -22-10-4 | | | | |
| WHT/RED | 22 | -22-9-2 | | | SOLDER | |
| BLACK | 22 | -22-0 | | | S-13671-8 | |
| RED | 16 | -16-2 | | | S-341-1 | |
| TAN | 22 | -22-10 | | | | |
| WHT/BLK | 22 | -22-9-0 | | | | |
| YELLOW | 18 | -18-4 | | | | |
| BLACK | 22 | -22-0 | | | S-13671-8 | |
| GREEN | 20 | -20-5 | | | S-341-2 | |
| BLUE | 22 | -22-6 | | | | |
| GRY/BLK | 22 | -22-8-0 | | | SOLDER | |
| GRY/BLU | 22 | -22-8-6 | | | | |
| GRY/YEL | 22 | -22-8-4 | | | | |
| BLU/RED | 22 | -22-6-2 | | | | |
| TAN/RED | 22 | -22-10-2 | | | | |
| BLACK | 16 | -16-0 | | | | |
| RED | 16 | -16-2 | | SOLDER | SOLDER | |

2 WIRE TABLE

CESSNA AIRCRAFT CO., COMMERCIAL AIRCRAFT DIVISION, WICHITA, KANSAS

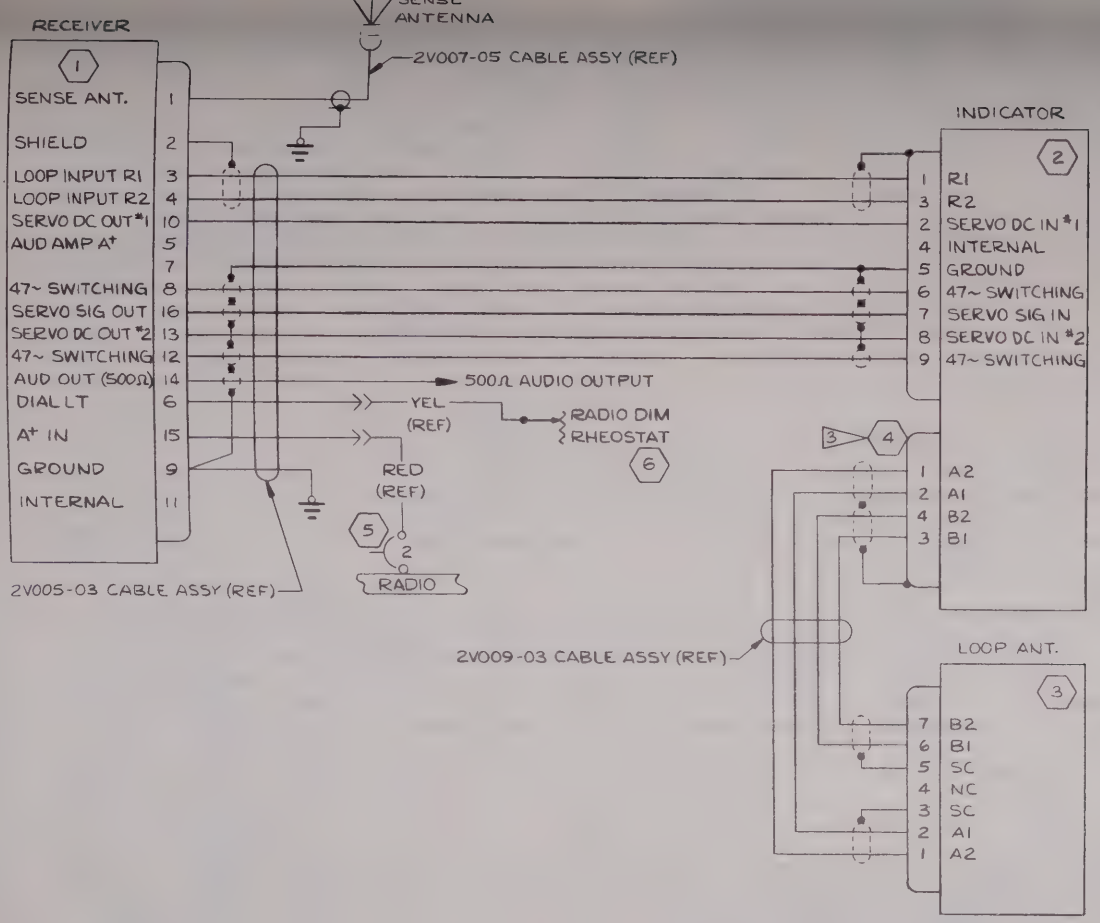


NOTES:

1. CONNECTIONS SHOWN ARE FOR TOP MOUNTED SENSE & BOTTOM MOUNTED LOOP ANTENNA.
2. ALL WIRES ARE VENDOR FURNISHED WITH INSTL KIT
3. (4) IS SUPPLIED LOOSE BY VENDOR & IS TO BE ATTACHED TO LOOP ANT. CABLE AS SHOWN. FLAGS ON WIRES INDICATE PIN NOS. ON LOOP ANT. END OF CABLE.

| ITEM NO | PART NO. | DESCRIPTION | INSTALLED ON |
|---|---|---|---|
| 6 | 0413126-5 | RHEOSTAT | |
| 5 | S-1360-2 | CIRCUIT BREAKER | |
| 3 4 | WK-4-21C-5/16 | PLUG (CED) | |
| 3 | 2321E | LOOP ANT. (BX) | |
| 2 | 551A | INDICATOR (BX) | |
| 1 | 201D | RCVR (BX) | |

EQUIPMENT TABLE

| WIRE CODE NO. | GA | MATERIAL | LG | TERMINALS | | SERIALS |
|---|---|---|---|---|---|---|
| | | | | | | |

WIRE TABLE

CESSNA AIRCRAFT CO., COMMERCIAL AIRCRAFT DIVISION, WICHITA, KANSAS

| | NAME | DATE |
|---|---|---|
| DRAWN | HOLFORD | 7-20-65 |
| GROUP | [illegible] | 8-24-65 |
| CHECK | [illegible] | 8-24-65 |
| PROJ | [illegible] | - |

TITLE: WIRING DIAGRAM— BENDIX ADF-T-12C

Cessna

DWG NO: 0770400

| SUPERSEDED BY: | SUPERSEDES. | MODEL: 180, 185 | REV: | PAGE: 2.37 |
|---|---|---|---|---|

FORM NO 80-161A

(SR4938)

| CHG LET | REVISION | BY DATE | CHK APPD |
|---|---|---|---|
| | | | |

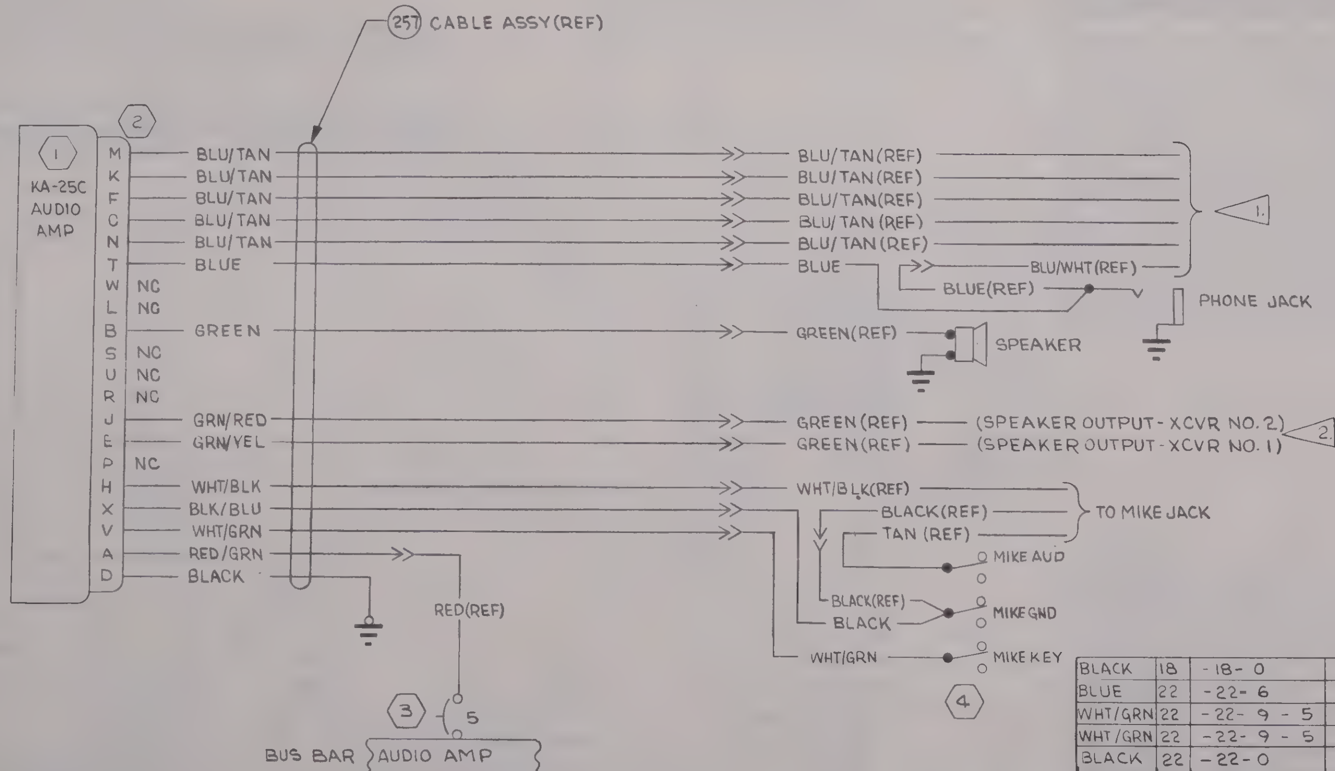


NOTES:

1. THESE WIRES TO AUDIO SWITCHING. REFER TO PAGE 2.0.2 FOR SCHEMATIC AND REQUIREMENTS. UNUSED BLU/TAN WIRES TO BE CAPPED WITH S-1557-1 TERMINALS.
2. THESE CIRCUITS PROVIDE 4 Ω, 5 WATT DUMMY SPEAKER LOADS WHEN REQUIRED.
3. WIRE MATERIAL PER S-1460.

| WIRE CODE NO. | GA | MATERIAL | LG | TERMINALS | | | SERIALS |
|---|---|---|---|---|---|---|---|
| BLACK | 18 | -18-0 | | S1367-1-10 | SOLDER | | |
| BLUE | 22 | -22-6 | | S-341-2 | | | |
| WHT/GRN | 22 | -22-9-5 | | | | | |
| WHT/GRN | 22 | -22-9-5 | | | | | |
| BLACK | 22 | -22-0 | | | | | |
| RED/GRN | 20 | -20-2-5 | | | | | |
| BLU/TAN | 22 | -22-6-10 | | | | | |
| BLU/TAN | 22 | -22-6-10 | | | | | |
| BLU/TAN | 22 | -22-6-10 | | | | | |
| BLU/TAN | 22 | -22-6-10 | | | | | |
| BLU/TAN | 22 | -22-6-10 | | | | | |
| BLUE | 22 | -22-6- | | | | | |
| GREEN | 20 | -20-5 | | | | | |
| GRN/RED | 20 | -20-5-2 | | | | | |
| GRN/YEL | 20 | -20-5-4 | | | | | |
| WHT/BLK | 22 | -22-9-0 | | | | | |
| BLK/BLU | 22 | -22-0-6 | | S-341-2 | SOLDER | | |

3. WIRE TABLE

CESSNA AIRCRAFT CO., COMMERCIAL AIRCRAFT DIVISION, WICHITA, KANSAS

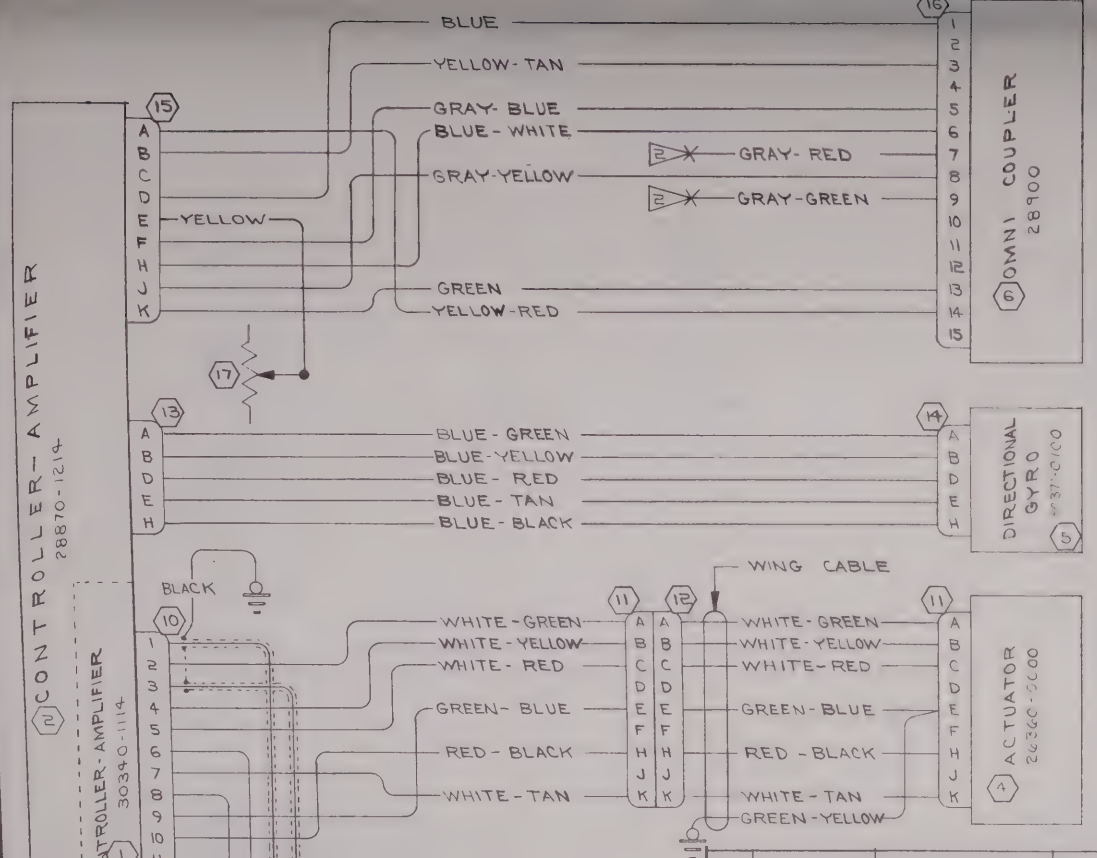


1. WHERE WIRE CODE LISTS 2 COLORS, 1ST COLOR IS BASE COLOR & 2ND COLOR IS THE STRIPE.
2. GRAY-RED WIRE IS "DEV+" CIRCUIT & GRAY-GREEN WIRE IS "DEV-" CIRCUIT FOR CONNECTION TO A VOR INDICATOR.
3. NAV-O-MATIC 300 SYSTEM INCLUDES ALL ITEMS EXCEPT (1), 200 SYSTEM INCLUDES (1) (3) (4) (7) & ASSOCIATED PLUGS & WIRES.
4. THIS DRAWING IS SCHEMATICALLY IDENTICAL TO 1270405, PAGE 17.7.1 AND IS FOR REF ONLY. CABLE ASSYS TO BE FABRICATED PER 1270405, PAGE 17.7.1

| LTR | DESCRIPTION | BY | DATE | APPD |
|---|---|---|---|---|
| A | ADDED YELLOW WIRE & 0413126-5; 30340-1114 WAS C-5938-1; 28870-1214 WAS C-594A; 50320 WAS G-515A; 26360-0000 WAS PA-510A; 30370-0100 WAS G-520A; 28900 WAS GA-512A | WJR | 11-2-64 | RRS and KE |

| WIRE CODE NO. | GA | MATERIAL | LG | TERMINALS | | N/A | SERIALS |
|---|---|---|---|---|---|---|---|
| YELLOW | 20 | S-1460-20-4 | | SOLDER | SOLDER | 1270449 | 1805148O & 185-0796 & ON |
| BLACK | 16 | S-1460-16-0 | | SOLDER | S-1367-2-8 | 1270449 | |
| YELLOW/RED | 20 | S-1460-20-4-2 | | | SOLDER | | |
| GREEN | 20 | S-1460-20-5 | | | SOLDER | | |
| GRAY/GREEN | 22 | S-1460-22-8-5 | | | S-1370-0 | | |
| GRAY/RED | 22 | S-1460-22-8-2 | | | S-1370-0 | | |
| GRAY/YELLOW | 22 | S-1460-22-8-4 | | | SOLDER | | |
| BLUE/WHITE | 22 | S-1460-22-6-9 | | | | | |
| GRAY/BLUE | 22 | S-1460-22-8-6 | | | | | |
| YELLOW/TAN | 20 | S-1460-20-4-10 | | | | | |
| BLUE | 22 | S-1460-22-6 | | | | | |
| BLUE/BLACK | 22 | S-1460-22-6-0 | | | | | |
| BLUE/TAN | 22 | S-1460-22-6-10 | | | | | |
| BLUE/RED | 22 | S-1460-22-6-2 | | | | | |
| BLUE/YELLOW | 22 | S-1460-22-6-4 | | | | | |
| BLUE/GREEN | 22 | S-1460-22-6-5 | | | | | |
| WHITE/GREEN | 22 | S-1460-22-9-5 | | | | | |
| WHITE/YELLOW | 22 | S-1460-22-9-4 | | | | | |
| WHITE/RED | 22 | S-1460-22-9-2 | | | | | |
| GREEN/BLUE | 20 | S-1460-20-5-6 | | | | | |
| RED/BLACK | 18 | S-1460-18-2-0 | | | | | |
| WHITE/TAN | 22 | S-1460-22-9-10 | | | SOLDER | | |
| GREEN/YELLOW | 20 | S-1460-20-5-4 | | | S-1367-1-8 | | |
| BLACK/WHITE | 18 | S-1460-18-0-9 | | | S-1367-1-8 | | |
| RED/WHITE | 18 | S-1460-18-2-9 | | | S-1367-1-8 | | |
| RED | 16 | S-1460-16-2 | | | S-1367-2-8 | | |
| RED/BLACK | 18 | S-1460-18-2-0 | | | SOLDER | | |
| GREEN/BLUE | 20 | S-1460-20-5-6 | | | | | |
| TAN/WHITE | 22 | S-1460-22-10-9 | | | | | |
| WHITE/TAN | 22 | S-1460-22-9-10 | | | | | |
| TAN/BLUE | 22 | S-1460-22-10-6 | | | | | |
| WHITE/RED | 22 | S-1460-22-9-2 | | | | | |
| WHITE/YELLOW | 22 | S-1460-22-9-4 | | | | | |
| BLUE/RED | 22S | S-1461-22-6-2 | | | | | |
| WHITE/GREEN | 22 | S-1460-22-9-5 | | | | | |
| BLUE/YELLOW | 22S | S-1461-22-6-4 | | SOLDER | SOLDER | 1270449 | |

WIRE TABLE

| ITEM NO | PART NO. | DESCRIPTION | INSTALLED ON |
|---|---|---|---|
| 17 | 0413126-5 | INST RHEOSTAT | |
| 16 | P9410 | PLUG (ARC) | |
| 15 | 28371-0009 | PLUG (ARC) | |
| 14 | 28326-0005 | PLUG (ARC) | |
| 13 | 28371-0005 | PLUG (ARC) | |
| 12 | 28505-0009 | PLUG (ARC) | |
| 11 | 28326-0009 | PLUG (ARC) | |
| 10 | 28336 | PLUG (ARC) | |
| 9 | 50328-0002 | PLUG (ARC) | |
| 8 | 28460 | PLUG (ARC) | |
| 7 | PSM-10N | CIRCUIT BREAKER | |
| 6 | 28900 | OMNI COUPLER (ARC TYPE CA-512A) | |
| 5 | 30370-0100 | DIRECTION GYRO (ARC TYPE G-520A) | |
| 4 | 26360-0000 | ACTUATOR (ARC TYPE PA-510A) | |
| 3 | 50320 | RATE GYRO (ARC TYPE G-515A) | |
| 2 | 28870-1214 | CONTROLLER-AMP (ARC TYPE C-594A-12) | |
| 1 | 30340-1114 | CONTROLLER-AMP (ARC TYPE C-5938-11) | |

EQUIPMENT TABLE

CESSNA AIRCRAFT CO., COMMERCIAL AIRCRAFT DIVISION, WICHITA, KANSAS

| | NAME | DATE |
|---|---|---|
| DRAWN | H. WISE | 5-3-63 |
| GROUP | | 5-16-63 |
| CHECK | R. Stuck | 5-16-63 |
| PROJ | | |

TITLE: WIRING DIAGRAM — NAV-O-MATIC 200 & 300 SYSTEMS (OPT)

Cessna.

DWG NO. 0700092

SUPERSEDED BY | SUPERSEDES 0700092, PAGE 17.3 | MODEL 180-185 | REV. A | PAGE 14.1

FORM NO. 80-161

NOTES:

1. GRY/RED WIRE IS DEV+" CIRCUIT & GRY/GRN WIRE IS "DEV-" CIRCUIT FOR CONNECTION TO THE OMNI SELECTOR SWITCH
2. WING & DIRECTIONAL GYRO WIRING ARE FOR REFERENCE ONLY. THESE WIRES ARE IDENTICAL IN LENGTH & COLOR TO THOSE USED IN THE NAV-O-MATIC 300 HARNESS

(SR4359)

| CHG LET | REVISION | BY / DATE | CHK / APPD |
|---|---|---|---|
| | | | |

| WIRE CODE NO | GA | MATERIAL | LG | TERMINALS | | | SERIALS |
|---|---|---|---|---|---|---|---|
| GRN/YEL | 20 | S-1460-20-5-4 | | SOLDER | S-1367-1-8 | 0770089 | |
| WHT/BLK | 22 | -22-9-0 | | | SOLDER | | |
| RED/BLK | 18 | -18-2-0 | | | | | |
| WHT/RED | 22 | -22-9-2 | | | | | |
| BLK/BLU | 22 | -22-0-6 | | | | | |
| WHT/YEL | 22 | -22-9-4 | | | | | |
| WHT GRN | 22 | -22-9-5 | | | | | |
| WHT/BLU | 22 | -22-9-6 | | | | | |
| WHT/TAN | 22 | -22-9-10 | | | | | |
| RED/BLK | 18 | -18-2-0 | | | | | |
| WHT/RED | 22 | -22-9-2 | | | | | |
| WHT, BLU | 22 | -22-9-6 | | | | | |
| WHT/TAN | 22 | -22-9-10 | | | | | |
| WHT/YEL | 22 | -22-9-4 | | | | | |
| WHT/GRN | 22 | -22-9-5 | | | | | |
| TAN/WHT | 22 | -22-10-9 | | | | | |
| TAN/BLU | 22 | -22-10-6 | | | | | |
| TAN, YEL | 22 | -22-10-4 | | | | | |
| TAN/RED | 22 | -22-10-2 | | | SOLDER | | |
| YELLOW | 18 | -18-4 | | | S-1370-1 | | |
| RED | 16 | -16-2 | | | S-1370-1 | | |
| WHT/RED | 22 | -22-9-2 | | | SOLDER | | |
| BLU/TAN | 22 | -22-6-10 | | | SOLDER | | |
| RED/WHT | 18 | -18-2-9 | | | SOLDER | | |
| WHT/BLK | 22 | -22-9-0 | | | SOLDER | | |
| GRY/GRN | 22 | -22-8-5 | | | S-1367-1-6 | | |
| GRY/RED | 22 | -22-8-2 | | | S-1367-1-6 | | |
| BLU/WHT | 22 | -22-6-9 | | | SOLDER | | |
| RED/BLK | 18 | -18-2-0 | | | | | |
| TAN/WHT | 22 | -22-10-9 | | | | | |
| BLU/GRN | 22 | -22-6-5 | | | | | |
| TAN/BLU | 22 | -22-10-6 | | | | | |
| TAN/RED | 22 | -22-10-2 | | | | | |
| BLU/YEL | 22 | -22-6-4 | | | | | |
| TAN, YEL | 22 | -22-10-4 | | | | | |
| BLU/RED | 22 | -22-6-2 | | | | | |
| BLU/BLK | 22 | -22-6-0 | | | | | |
| TAN | 22 | -22-10 | | | | | |
| BLUE | 22 | S-1460-22-6 | | SOLDER | SOLDER | 0770089 | |

WIRE TABLE

CESSNA AIRCRAFT CO. COMMERCIAL AIRCRAFT DIVISION, WICHITA, KANSAS

| | NAME | DATE |
|---|---|---|
| DRAWN | JOHNSON | 9-18-63 |
| GROUP | N Tennant | 12-22-64 |
| CHECK | R. Stuck | 10-29-63 |
| PROJ | [illegible] | 12-22-64 |

TITLE: WIRING DIAGRAM — NAV-O-MATIC 400 (OPT)

Cessna.

DWG NO 0700092

| PART NO | DESCRIPTION | INSTALLED ON |
|---|---|---|

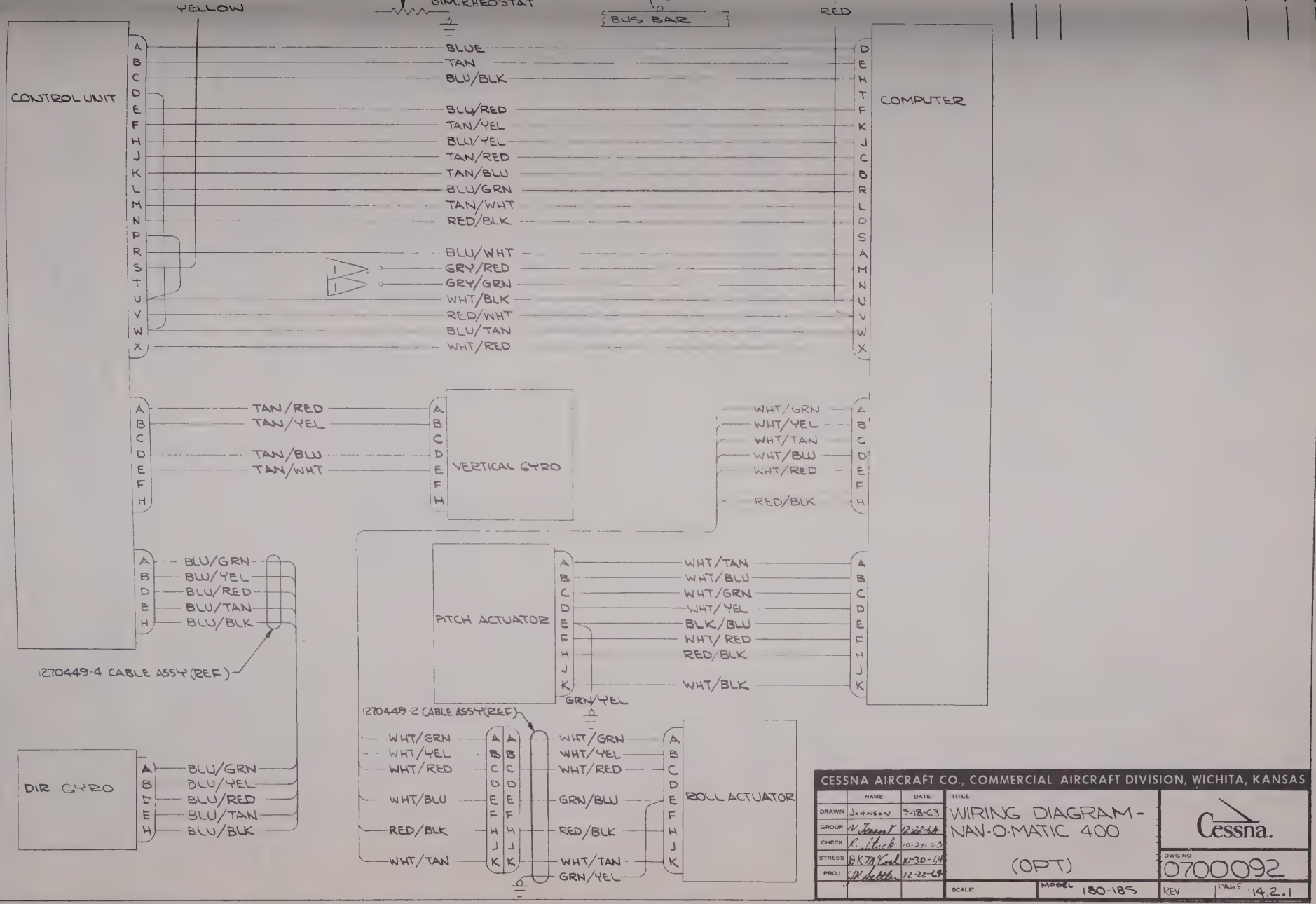
YELLOW
DIM. RHEOSTAT
BUS BAR
RED
CONTROL UNIT
COMPUTER
BLUE
TAN
BLU/BLK
BLU/RED
TAN/YEL
BLU/YEL
TAN/RED
TAN/BLU
BLU/GRN
TAN/WHT
RED/BLK
BLU/WHT
GRY/RED
GRY/GRN
WHT/BLK
RED/WHT
BLU/TAN
WHT/RED
TAN/RED
TAN/YEL
TAN/BLU
TAN/WHT
VERTICAL GYRO
WHT/GRN
WHT/YEL
WHT/TAN
WHT/BLU
WHT/RED
RED/BLK
BLU/GRN
BLU/YEL
BLU/RED
BLU/TAN
BLU/BLK
1270449-4 CABLE ASSY (REF)
PITCH ACTUATOR
WHT/TAN
WHT/BLU
WHT/GRN
WHT/YEL
BLK/BLU
WHT/RED
RED/BLK
WHT/BLK
GRN/YEL
1270449-2 CABLE ASSY (REF)
DIR GYRO
BLU/GRN
BLU/YEL
BLU/RED
BLU/TAN
BLU/BLK
WHT/GRN
WHT/YEL
WHT/RED
WHT/BLU
RED/BLK
WHT/TAN
WHT/GRN
WHT/YEL
WHT/RED
GRN/BLU
RED/BLK
WHT/TAN
GRN/YEL
ROLL ACTUATOR
CESSNA AIRCRAFT CO., COMMERCIAL AIRCRAFT DIVISION, WICHITA, KANSAS
NAME
DATE
DRAWN
JOHNSON
9-18-63
GROUP
12-22-64
CHECK
R. Stuck
10-27-63
STRESS
10-30-64
PROJ
12-22-64
TITLE
WIRING DIAGRAM-
NAV-O-MATIC 400
(OPT)
Cessna.
DWG NO
0700092
SCALE:
MODEL 180-185
REV
PAGE 14.2.1
FORM NO 80-156

# TABLE OF CONTENTS

## 1963 THRU 1964
## 18254424 THRU 18255842


| NO. | TITLE | DATE ISSUED | REV |
|---|---|---|---|
| 1 | Radio Speaker, Phone Jack, Mike, Light Rheostat & Power Circuits | 7-3-63 | A |
| 2 | Cessna ADF 500 (ARC Type 318A) | 12-4-63 | Inac. |
| 2.1 | Cessna ADF 500 (ARC Type 318A) | 12-4-63 | A |
| 3 | Cessna Nav/Com 500 (ARC Type 317A) | 12-4-63 | B-Inac. |
| 3.1 | Cessna Nav/Com 500 (ARC Type 317A) | 9-3-64 | A-Inac. |
| 3.2 | Cessna Nav/Com 500 (ARC Type 317A) | 9-3-64 | Inac. |
| 4 | Cessna Nav/Com 300 (ARC Type 513A) | 12-4-63 | A-Inac. |
| 4.1 | Cessna Nav/Com 300 (ARC Type 513A) | 12-4-63 | A-Inac. |
| 5 | Cessna ADF 300 (ARC Type 521A) | 9-3-64 | A-Inac. |
| 6 | XMTR & Audio Selector Switches | 3-4-63 | Inac. |
| 7 | Nav-O-Matic 200 & 300 Systems | 5-27-63 | Inac. |
| 7.1 | Nav-O-Matic 200 & 300 Systems | 5-27-63 | |
| 8 | King KX-150 | 10-22-63 | Inac. |
| 8.1 | King KX-150 | 10-22-63 | Inac. |
| 8.2 | King KX-150 | 3-30-64 | A |
| 9 | Narco UGR-IA Glide Slope with Narco Mark V or Mark X & VOA-5 | 7-3-63 | Inac. |
| 9.1 | Narco UGR-IA Glide Slope with Narco Mark V or Mark X & VOA-5 | 7-3-63 | Inac. |
| 10 | Pantronics DXIO-D HF Transceiver Installation | 8-13-63 | Inac. |
| 10.1 | Pantronics DXIO-D HF Transceiver Installation | 8-13-63 | Inac. |
| 10.2 | Pantronics DXIO-D HF Transceiver Installation | 8-13-63 | Inac. |
| 10.3 | Pantronics DXIO-D HF Transceiver Installation | 8-13-63 | |
| 10.4 | Pantronics DXIO-D HF Transceiver Installation | 8-13-63 | |
| 10.5 | Pantronics DXIO-D HF Transceiver Installation | 8-13-63 | |
| 11 | ARC Type 319A NAV Receiver System | 7-17-63 | Inac. |
| 11.1 | ARC Type 319A NAV Receiver System | 7-17-63 | Inac. |
| 11.2 | Cessna NAV/OMNI 500 | 9-17-64 | Inac. |
| 11.3 | Cessna NAV/OMNI 500 | 9-17-64 | Inac. |
| 12 | ARC Type 302A Communication System | 8-13-63 | Inac. |
| 12.1 | Cessna Transceiver 500 | 8-20-64 | A-Inac. |

# TABLE OF CONTENTS


| PAGE NO. | TITLE | DATE ISSUED | |
|---|---|---|---|
| 17.13 | Market Beacon Audio Switch | 12-28-62 | |
| 17.14 | Narco Mark V With VOA-4 or VOA-5 | 7-3-63 | In |
| 17.15 | Sunair T-5-DA | 3-4-63 | |
| 17.15.1 | Sunair T-5-DA | 3-4-63 | |
| 17.16 | Transmitter & Audio Selector Switch with King KA-10 Amp. | 10-6-64 | B- |
| 17.17 | Transmitter and Audio Selector Switches | 3-19-63 | |
| 17.18 | King KY-90, KY-95, KX-100 & KX-120 | 6-5-63 | In |
| 17.18.1 | King KY-95 & KX-120 | 12-17-63 | |
| 17.19 | Cessna Marker Beacon 300 (ARC Type R-502B) | 3-17-64 | |
| 17.20 | Narco Mark 12 with VOA-4, VOA-6 | 5-17-63 | |
| 17.21 | Narco UGR-1A Glideslope with Narco Mark 12 & VOA-5 | 7-8-63 | |
| 17.22 | Cessna Nav/Com 300 (ARC Type 514A) | 8-20-64 | In |
| 17.22.1 | Cessna Nav/Com 300 (ARC Type 514A) | 8-20-64 | In |
| 17.23 | Nav-O-Matic 400 System | 10-2-63 | |
| 17.23.1 | Nav-O-Matic 400 System | 10-2-63 | |
| 17.24 | Cessna Nav/Com 300R | 8-20-64 | A- |

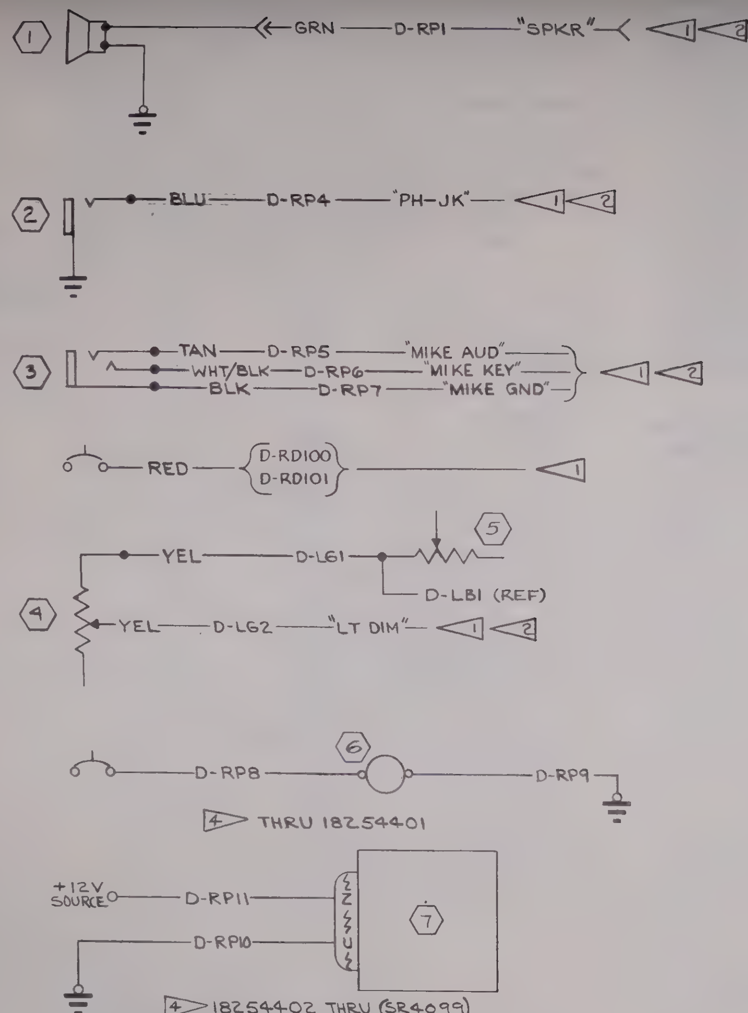


1. WIRES TO BE OF SUFFICIENT LENGTH TO ALLOW CONNECTION TO ALL POSSIBLE RADIO COMBINATIONS. TERMINALS TO BE ATTACHED TO WIRES AS REQD BY THE VARIOUS RADIO INSTALLATIONS.
2. WIRES D-RP1, D-RP4, D-RP5, D-RP6 D-RP7 & D-LG2 TO BE CODED "SPKR", "PH-JK", "MIKE AUD", "MIKE KEY" "MIKE GND" & "LT DIM" RESPECTIVELY. NUMERICAL CODING PER CES 1100 IS OPTIONAL ON THESE WIRES THRU (SR4037).
3. AS REQD ON VARIOUS RADIO INSTALLATIONS.
4. THESE WIRES USED ON 0770631 SERIES OPTIONAL ISO AMP INSTL FOR 182 & OTHER MODELS.
5. COLOR CODED WIRES TO BE SUBSTITUTED FOR MACHINE STAMPED CODED WIRES (SR4037) & ON.

| | | | |
|---|---|---|---|
| A | ADD THRU (SR4037) TO 2; ADDED COLOR CODED WIRES TO FIELD & B/M; ADDED LIMITING SERIALS TO D-RP11 & D-RP10 WIRES; D-LG2 18 GAGE WAS 20 GAGE; OBSOLETED D-RD100; D-RP5, D-RP6 D-RP7 22 GAGE WAS 20 GAGE; D-RP4 22 GAGE WAS 20 GAGE; ADDED NOTE 5 (SR4037-9) | WJR 6-4-63 | HKW |

| | WIRE CODE NO. | GA | MATERIAL | LG | TERMINALS | TERMINALS | N/A | SERIALS |
|---|---|---|---|---|---|---|---|---|
| 4 | D-RP11 | 20 | | | S-1367-1-8 | SOLDER | 0770631 | (OPT) 18254402 THRU (SR4099) |
| | D-RP10 | 20 | | | S-1367-1-8 | SOLDER | 0770631 | (OPT) 18254402 THRU (SR4099) |
| | D-RP9 | 20 | | | S-1367-1-8 | 320733 (AMP) | 0770631 | (OPT) THRU 18254401 |
| 4 | D-RP8 | 20 | | | S-1367-1-8 | 320733 (AMP) | 0770631 | (OPT THRU 18254401 |
| 2 YELLOW | D-LG2 | 18 | S-1460-18-4 | | 1 | SOLDER | 3 | (OPT) |
| YELLOW | D LG1 | 18 | S-1460-18-4 | | SOLDER | SOLDER | 3 | (OPT) |
| RED | D-RD101 | 16 | S 1460-16-2 | | 1 | S-1367-2-8 | 3 | (OPT) |
| | D-RD100 | 18 | | | 1 | S-1367-1-8 | 3 | (OPT). OBSOLETE |
| 2 BLACK | D-RP7 | 22 | S-1460-22-0 | | 1 | SOLDER | 3 | (OPT) |
| WHT/BLK | D-RP6 | 22 | S-1460-22-9-0 | | 1 | SOLDER | 3 | (OPT) |
| TAN | D-RP5 | 22 | S-1460-22-10 | | 1 | SOLDER | 3 | (OPT) |
| BLUE | D-RP4 | 22 | S-1460-22-6 | | 1 | SOLDER | 3 | (OPT) |
| 2 GREEN | D-RP1 | 20 | S-1460-20-5 | | S-341-2 | S-341-2 | | (STD) |

WIRE TABLE

| ITEM NO | PART NO. | DESCRIPTION | INSTALLED ON |
|---|---|---|---|
| 7 | 0770640-3 | ISOLATION AMP | |
| 6 | 0770640-2 | ISOLATION AMP | |
| 5 | R-12½-8-RS34 | RHEO, INST LT DIM (TRTA) | |
| 4 | R-12½-75-RS34 | RHEO, RADIO DIM (TRTA) | |
| 3 | S-1102-1 | MICROPHONE JACK | |
| 2 | S-1103-1 | HEADPHONE JACK | |
| 1 | 0411062-9 | SPEAKER | |

EQUIPMENT TABLE

CESSNA AIRCRAFT CO. COMMERCIAL AIRCRAFT DIVISION WICHITA KANSAS

| | NAME | DATE |
|---|---|---|
| DRAWN | G WOOD | 9-7-62 |
| GROUP | [illegible] | 10-17-62 |
| CHECK | R. Stuck | 10-12-62 |
| PROJ | N. McCarter | 10-17-62 |

TITLE: WIRING DIAGRAM — RADIO SPEAKER, 'PHONE JACK, MIKE, LIGHT RHEO. & POWER CIRCUITS

Cessna.

DWG NO. 0770610

SUPERSEDED BY: | SUPERSEDES: | MODEL: 182 | REV: A | PAGE: 17.1

FORM NO. 80-161

(SR 3707-9)

| CHG LET | REVISION | BY / DATE | CHK / APPD |
|---|---|---|---|
| A | BY REVISION: ADD NOTE 2. DY-318A DYNA-VERTER WAS POWER SUPPLY. | G L W 8-10-62 | |
| B | BY REVISION: N/A 0770658 WAS 0770656 | G L W 11-28-62 | |
| C | BY REVISION: TITLE WAS ARC TYPE 318A ADF (OPT) | W J R 12-3-63 | |

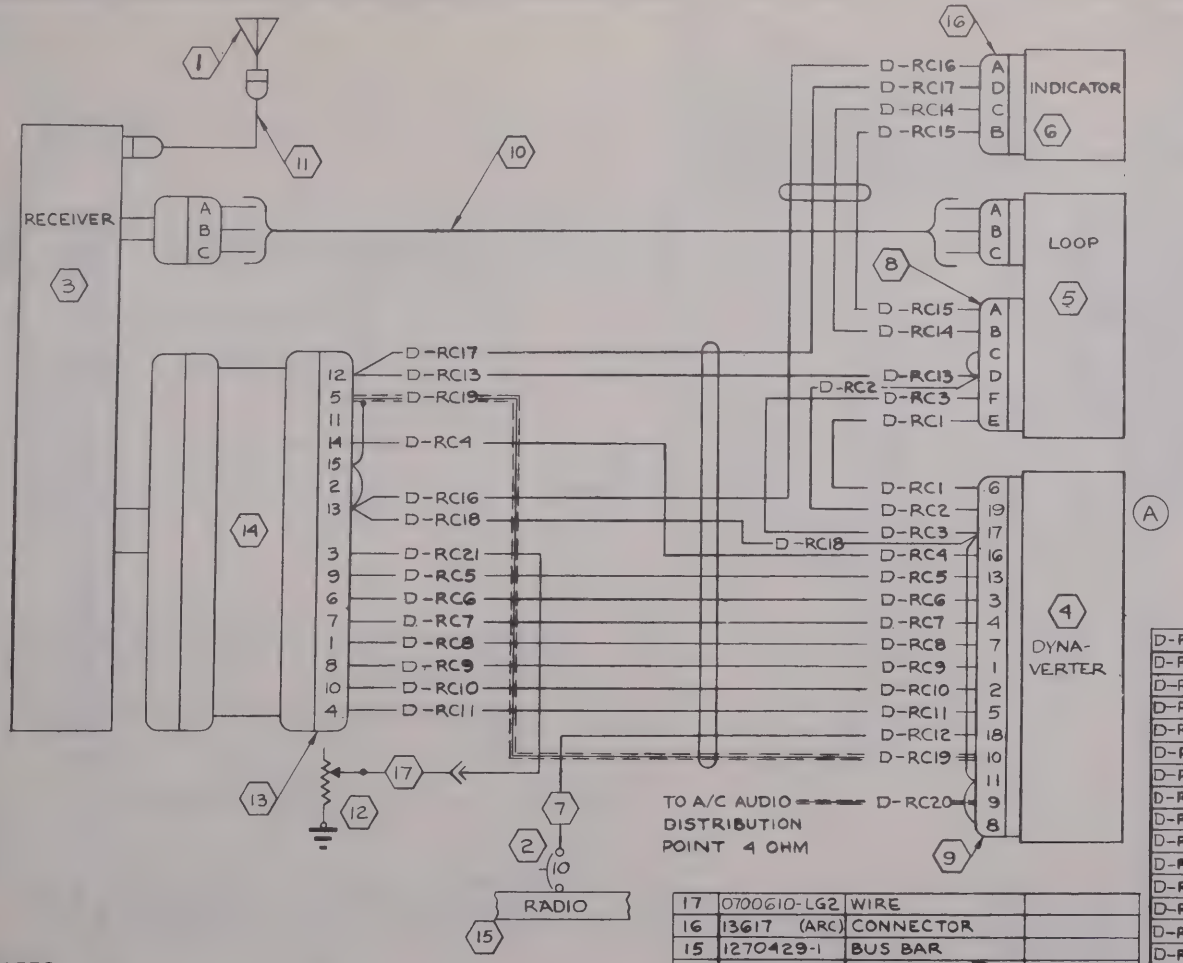


Inactive SER 18255059 & ON
W.J.R. 6-19-63 RRS NMC
ALA

| | | | | | | | |
|---|---|---|---|---|---|---|---|
| D-RC21 | 18 | | | SOLDER | S-341-2 | 0770658 | |
| D-RC20 | 22S | | | | | | |
| D-RC19 | 22S | | | | SOLDER | | |
| D-RC18 | 18 | | | | | | |
| D-RC17 | 22 | | | | | | |
| D-RC16 | 22 | | | | | | |
| D-RC15 | 22 | | | | | | |
| D-RC14 | 22 | | | SOLDER | | | |
| D-RC13 | 22 | | | SOLDER | | | |
| D-RC12 | 16 | | | S-1367-28 | | | |
| D-RC11 | 22 | | | SOLDER | | | |
| D-RC10 | 22 | | | | | | |
| D-RC9 | 22 | | | | | | |
| D-RC8 | 22 | | | | | | |
| D-RC7 | 22 | | | | | | |
| D-RC6 | 22 | | | | | | |
| D-RC5 | 22 | | | | | | |
| D-RC4 | 16 | | | | | | |
| D-RC3 | 22 | | | | | | |
| D-RC2 | 22 | | | | | | |
| D-RC1 | 22 | | | SOLDER | SOLDER | 0770658 | |
| WIRE CODE NO. | GA | MATERIAL | LG | TERMINALS | | N/A | SERIALS |

WIRE TABLE

| | | |
|---|---|---|
| 17 | 0700610-LG2 | WIRE |
| 16 | 13617 (ARC) | CONNECTOR |
| 15 | 1270429-1 | BUS BAR |
| 14 | 27873 (ARC) | FILTER KIT 1 |
| 13 | 26795 (ARC) | CONNECTOR KIT |
| 12 | 0111-351 (OHM) | RHEOSTAT |
| 11 | 18637 (ARC) | SENSE ANT. CABLE |
| 10 | 17985 | LOOP CABLE ASSY |
| 9 | 27881 | CONNECTOR |
| 8 | 19062 (ARC) | CONNECTOR |
| 7 | 0700610-RD101 | WIRE |
| 6 | IN-318A (ARC) | INDICATOR |
| 5 | L-11 | LOOP |
| 4 | DV-318A | DYNAVERTER |
| 3 | R-318A (ARC) | RECEIVER |
| 2 | S-1232-10 | CIRCUIT BREAKER |
| 1 | 1270420-2 | SENSE ANTENNA |

NOTES:

1. INSTALL 27873 FILTER KIT ON TSO INSTALLATIONS.
A 2. PINS 8, 9, 10, 11 OF 4 DYNAVERTER ARE OPEN EXCEPT WHEN OPTIONAL SPEAKER AMPLIFIER (ARC KIT NO. 27624) IS INSTALLED INSIDE THE DYNAVERTER. PIN 5 OF RECEIVER IS A 300 Ω AUDIO DISTRIBUTION POINT WHEN THE SPEAKER AMP KIT IS NOT USED. SCHEMATIC SHOWN IS FOR ADF SYSTEM WITH SPKR AMP INSTALLED.

CESSNA AIRCRAFT CO COMMERCIAL AIRCRAFT DIVISION WICHITA, KANSAS

| | NAME | DATE |
|---|---|---|
| DRAWN | G WOOD | 2-19-62 |
| GROUP | | |
| CHECK | R. Stuck | 4-30-62 |
| PROJ | W. McCarter | 5-2-62 |

TITLE: WIRING DIAGRAM — CESSNA ADF 500 (OPT)

Cessna.

DWG NO. 0770610

(SR4031-9)

| LET | REVISION: TITLE WAS ARC TYPE 318A ADF (OPT) ITEM 6 WAS IN-318A (ARC), ITEM 4 WAS DV-318A (ARC) & ITEM 3 R-318A (ARC) ITEM NO. 19 WAS 27873 FILTER KIT, ITEM NO. 5 WAS L-11. | DATE | APPD |
|---|---|---|---|
| A | | WJR 12-3-63 | RRS 12-3-63 |

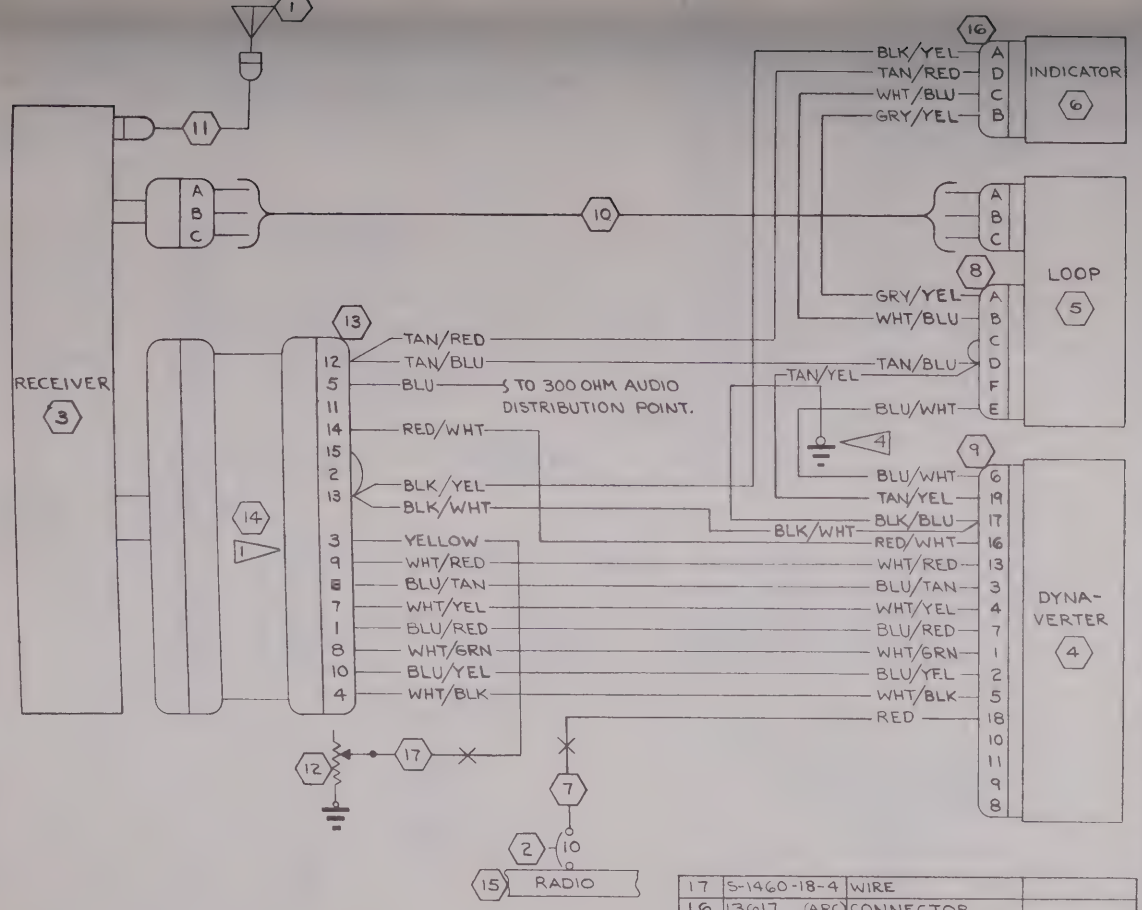


Inactive SER 18255845 & ON
W. J. R. 7-7-64
RRS

| WIRE CODE NO | GA | MATERIAL | LG | TERMINALS | | N/A | SERIALS |
|---|---|---|---|---|---|---|---|
| YELLOW | 18 | S-1460-18-4 | | S-1370-1 | SOLDER | 0770658 | |
| BLU | 22 | S-1460-22-6 | | | | | |
| BLK/WHT | 18 | S-1460-18-0-9 | | SOLDER | | | |
| TAN/RED | 22 | S-1460-22-10-2 | | | | | |
| BLK/YEL | 22 | S-1460-22-0-4 | | | | | |
| GRY/YEL | 22 | S-1460-22-8-4 | | | | | |
| WHT/BLU | 22 | S-1460-22-9-6 | | | | | |
| TAN/BLU | 22 | S-1460-22-10-6 | | SOLDER | | | |
| RED | 16 | S-1460-16-2 | | S-1370-2 | | | |
| WHT/BLK | 22 | S-1460-22-9-0 | | SOLDER | | | |
| BLU/YEL | 22 | S-1460-22-6-4 | | | | | |
| WHT/GRN | 22 | S-1460-22-9-5 | | | | | |
| BLU/RED | 22 | S-1460-22-6-2 | | | | | |
| WHT/YEL | 22 | S-1460-22-9-4 | | | | | |
| BLU/TAN | 22 | S-1460-22-6-10 | | | | | |
| WHT/RED | 22 | S-1460-22-9-2 | | | | | |
| RED/WHT | 18 | S-1460-18-2-9 | | | SOLDER | | |
| BLK/BLU | 22 | S-1460-22-0-6 | | | S-1367-1-8 | | |
| TAN/YEL | 22 | S-1460-22-10-4 | | | SOLDER | | |
| BLU/WHT | 22 | S-1460-22-6-9 | | SOLDER | SOLDER | 0770658 | |

WIRE TABLE

| ITEM NO | PART NO | DESCRIPTION | INSTALLED ON |
|---|---|---|---|
| 17 | S-1460-18-4 | WIRE | |
| 16 | 13617 (ARC) | CONNECTOR | |
| 15 | 0713743-1 | BUS BAR | |
| 14 | 27859 (ARC) | FILTER ASSY 1 | |
| 13 | 26795 (ARC) | CONNECTOR KIT | |
| 12 | R-12½-75-RS34 | RHEOSTAT (TRTA) | |
| 11 | 18637 (ARC) | SENSE ANT. CABLE | |
| 10 | 17985 (ARC) | LOOP CABLE ASSY | |
| 9 | 27881 (ARC) | CONNECTOR | |
| 8 | 19062 (ARC) | CONNECTOR | |
| 7 | S-1460-16-2 | WIRE | |
| 6 | 27500 | INDICATOR | |
| 5 | 18000 (ARC) | LOOP | |
| 4 | 26960-0014 | DYNAVERTER | |
| 3 | 25400-1000 | RECEIVER | |
| 2 | S-1360-10 | CIRCUIT BREAKER | |
| 1 | 0770625-1 | SENSE ANTENNA | |

EQUIPMENT TABLE

NOTES:
1. INSTALL 27859 FILTER ASSY ON TSO INSTALLATIONS.
2. WHERE WIRE CODE LISTS 2 COLORS, 1ST COLOR IS BASE COLOR & 2ND COLOR IS THE STRIPE.
3. INDICATOR & LOOP CONNECTIONS SHOWN ARE FOR TOP MOUNTED LOOP & SENSE ANTENNAS.
4. BLK/BLU WIRE TO BE GROUNDED TO AIRFRAME NEAR LOOP BUT NOT CONNECTED TO LOOP.

CESSNA AIRCRAFT CO., COMMERCIAL AIRCRAFT DIVISION, WICHITA, KANSAS

| | NAME | DATE |
|---|---|---|
| DRAWN | RIDDER | 6-19-63 |
| GROUP | [illegible] | 7-8-63 |
| CHECK | R. Stick | 7-3-63 |
| PROJ | N. McCabe | 7-8-63 |

TITLE: WIRING DIAGRAM — CESSNA ADF 500 (OPT) (ARC TYPE 318A)

Cessna.

DWG NO. 0770610

| SUPERSEDED BY | SUPERSEDES | MODEL | REV | PAGE |
|---|---|---|---|---|
| 0770750 PAGE 2.15.1 | 0770610 PAGE 17.2 | 182 | A | 17.2.1 |

FORM NO. 80-161

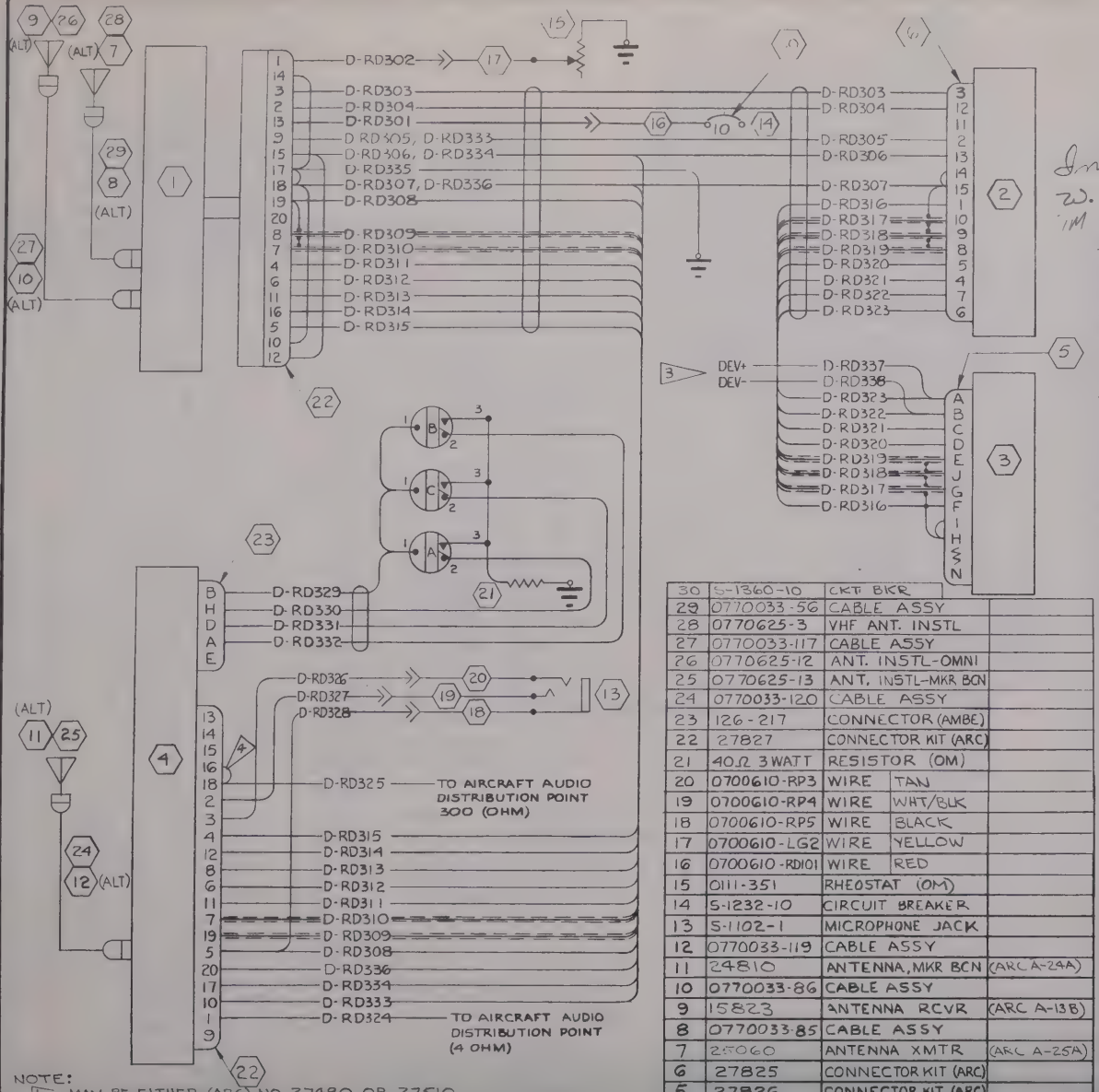


(SR 3707- )

| CHG LET | REVISION | BY DATE | CHK APPD |
|---|---|---|---|
| A | BY REVISION: ADD NOTE 3. ADD ITEMS 24 THRU ITEM 29. ADD WIRES D-RD337 & D-RD338. 0770659 WAS 0770657 N/A. ADDED ALT TO A-13B, A-24A ANT. 0770033-86, -119 CABLE ASSY A-25A ANT. & 0770033-85 | GLW 12-19-62 | |
| B | BY REV.: ADDED NOTES 3 & 5 & 6, ADDED ITEM 30; ADDED COLOR CODE TO WIRE TABLE D-RD302 8 GA WAS 22GA D-RD306 18 GA WAS 22GA. REMOVED NOTE 2. INACTIVATED DWG.; DWG TITLE WAS ARC TYPE 317A OMNI NAV SYSTEM (SR4309) | WJR 8-6-63 | |

Inactive (SR4309) & ON
W. J. R. 8-6-63
IM
RRS

| | | | | | | | |
|---|---|---|---|---|---|---|---|
| D-RD338 | 22 | GRY/GRN | | —— | SOLDER | 0770659 | |
| D-RD337 | 22 | GRY/RED | | —— | ↓ | ↓ | |
| D-RD336 | 16 | BLACK | | SOLDER | | | |
| D-RD335 | 16 | BLACK | | S-1367-2-8 | | | |
| D-RD334 | 16 | RED | | SOLDER | | | |
| D-RD333 | 22 | TAN/BLU | | ↓ | | | |
| D-RD332 | 22 | WHT/YEL | | | | | |
| D-RD331 | 22 | WHT/GRN | | | | | |
| D-RD330 | 22 | WHT/BLU | | | | | |
| D-RD329 | 22 | WHT/TAN | | | | | |
| D-RD328 | 22 | BLACK | | | | | |
| D-RD327 | 22 | WHT/BLK | | | | | |
| D-RD326 | 22 | TAN | | | | | |
| D-RD325 | 22 | BLUE | | | | | |
| D-RD324 | 20 | GREEN | | | | | |
| D-RD323 | 22 | GRY/BLU | | | | | |
| D-RD322 | 22 | WHT/RED | | | | | |
| D-RD321 | 22 | BLU/WHT | | | | | |
| D-RD320 | 22 | WHT/TAN | | | | | |
| D-RD319 | 22-5 | BLU/WHT | | | | | |
| D-RD318 | 22-5 | BLU/RED | | | | | |
| D-RD317 | 22-5 | BLU/BLK | | | | | |
| D-RD316 | 22 | BLK/YEL | | | | | |
| D-RD315 | 22 | WHT/BLU | | | | | |
| D-RD314 | 22 | TAN/WHT | | | | | |
| D-RD313 | 22 | BLU/GRN | | | | | |
| D-RD312 | 22 | GRY/BLU | | | | | |
| D-RD311 | 22 | WHT/YEL | | | | | |
| D-RD310 | 22-5 | BLU/GRN | | | | | |
| D-RD309 | 22-5 | BLU/YEL | | | | | |
| D-RD308 | 22 | BLK/BLU | | | | | |
| D-RD307 | 22 | BLK/RED | | | | | |
| D-RD306 | 18 | RED/BLK | | | | | |
| D-RD305 | 22 | TAN/BLU | | | | | |
| D-RD304 | 22 | BLU/BLK | | | | | |
| D-RD303 | 22 | BLU/YEL | | SOLDER | | | |
| D-RD302 | 18 | YELLOW | | S-341-2 | ↓ | ↓ | |
| D-RD301 | 16 | RED | | S-341-1 | SOLDER | 0770659 | |
| WIRE CODE NO. | GA | MATERIAL COLOR CODE | LG | TERMINALS | | N/A | SERIALS |

6

WIRE TABLE

| | | |
|---|---|---|
| 30 | S-1360-10 | CKT BKR |
| 29 | 0770033-56 | CABLE ASSY |
| 28 | 0770625-3 | VHF ANT. INSTL |
| 27 | 0770033-117 | CABLE ASSY |
| 26 | 0770625-12 | ANT. INSTL-OMNI |
| 25 | 0770625-13 | ANT. INSTL-MKR BCN |
| 24 | 0770033-120 | CABLE ASSY |
| 23 | 126-217 | CONNECTOR (AMBE) |
| 22 | 27827 | CONNECTOR KIT (ARC) |
| 21 | 40Ω 3 WATT | RESISTOR (OM) |
| 20 | 0700610-RP3 | WIRE TAN |
| 19 | 0700610-RP4 | WIRE WHT/BLK |
| 18 | 0700610-RP5 | WIRE BLACK |
| 17 | 0700610-LG2 | WIRE YELLOW |
| 16 | 0700610-RD101 | WIRE RED |
| 15 | 0111-351 | RHEOSTAT (OM) |
| 14 | S-1232-10 | CIRCUIT BREAKER |
| 13 | S-1102-1 | MICROPHONE JACK |
| 12 | 0770033-119 | CABLE ASSY |
| 11 | 24810 | ANTENNA, MKR BCN (ARC A-24A) |
| 10 | 0770033-86 | CABLE ASSY |
| 9 | 15823 | ANTENNA RCVR (ARC A-13B) |
| 8 | 0770033-85 | CABLE ASSY |
| 7 | 25060 | ANTENNA XMTR (ARC A-25A) |
| 6 | 27825 | CONNECTOR KIT (ARC) |
| 5 | 27826 | CONNECTOR KIT (ARC) |
| 4 | 68490-0019 | DYNAVERTER (ARC DV-317A-1) |
| 3 | 1 (ARC) | INDICATOR |
| 2 | 24660 | CONVERTER (ARC B-317A) |
| 1 | 24650-1000 | RCVR-XMTR (ARC RT-317A) |
| ITEM NO. | PART NO | DESCRIPTION / INSTALLED ON |

NOTE:
1. MAY BE EITHER (ARC) NO. 27490 OR 27510.
2. MAY BE EITHER TYPE DV-317A OR TYPE DV-317A-1. DV-317A DOES NOT INCLUDE MKR BCN LIGHT CIRCUITS.
3. OPTIONAL CONNECTION TO 28900 OMNI COUPLER (NAV-O-MATIC 300 SYSTEM).
4. OMIT JUMPER WHEN SPKR OUTPUT FROM PIN 1 IS NOT DESIRED.
5. COLOR CODED WIRES APPLY 1825059 & ON.
6. WIRE MATL PER S-1960, SHIELDED WIRE PER S-1961.

CESSNA AIRCRAFT CO. COMMERCIAL AIRCRAFT DIVISION WICHITA KANSAS

| | NAME | DATE |
|---|---|---|
| DRAWN | G WOOD | 3-26-62 |
| GROUP | NEW | |
| CHECK | R. Ethridge | 4-30-62 |
| PROJ | Wm Carter | 5-2-62 |

TITLE: WIRING DIAGRAM — CESSNA NAV/COMM 500 (OPT) (ARC TYPE 317A)

Cessna.

DWG NO. 0770610

REV — PAGE

NOTES:

1. INDICATOR MAY BE EITHER (ARC) NO. 27490 OR 27510.
2. OPTIONAL CONNECTION TO (ARC) NO. 28900 OMNI COUPLER (NAV-O-MATIC 300 SYSTEM).

| | | | |
|---|---|---|---|
| A | ADDED JUMPER WIRE FROM PIN 15 TO PIN 14 ON 27825 CONNECTOR KIT. INACTIVATED DRAWING (SR 9451) | WJR | 7-7-64 |

Inactive 18255845 & ON
WJR 7-7-64 RRS

| WIRE CODE NO | GA | MATERIAL | LG | TERMINALS | | N/A | SERIALS |
|---|---|---|---|---|---|---|---|
| BLK/YEL | 22 | S-1460-22-0-4 | | SOLDER | SOLDER | 1270466 | |
| BLU/BLK | 22S | S-1461-22-6-0 | | | | | |
| BLU/RED | 22S | S-1461-22-6-2 | | | | | |
| BLU/WHT | 22S | S-1461-22-6-9 | | | | | |
| WHT/TAN | 22 | S-1460-22-9-10 | | | | | |
| BLU/WHT | 22 | S-1460-22-6-9 | | | | | |
| WHT/RED | 22 | S-1460-22-9-2 | | | | | |
| GRY/BLU | 22 | S-1460-22-8-6 | | | SOLDER | | |
| GRY/GRN | 22 | S-1460-22-8-5 | | | S-1370-1 | | |
| GRY/RED | 22 | S-1460-22-8-2 | | | S-1370-1 | | |
| BLU/TAN | 22 | S-1460-22-6-10 | | | | | |
| GREEN | 20 | S-1460-20-5 | | | S-1370-1 | | |
| BLACK | 22 | S-1460-22-0 | | | S-1370-1 | | |
| RED/WHT | 18 | S-1460-18-2-9 | | | S-1367-1-6 | | |
| TAN | 22 | S-1460-22-10 | | | S-1370-1 | | |
| WHT/BLK | 22 | S-1460-22-9-0 | | | S-1370-1 | | |
| BLUE | 22 | S-1460-22-6 | | | S-1370-1 | | |
| BLU/WHT | 22 | S-1460-22-6-9 | | | | | |
| BLU/TAN | 22 | S-1460-22-6-10 | | | | | |
| BLU/WHT | 22 | S-1460-22-6-9 | | | | | |
| BLU/TAN | 22 | S-1460-22-6-10 | | SOLDER | | | |
| BLK/WHT | 18 | S-1460-18-0-9 | | S-1370-1 | S-1367-1-8 | | |
| WHT/RED | 22 | S-1460-22-9-2 | | SOLDER | SOLDER | | |
| BLU/YEL | 22S | S-1461-22-6-4 | | | | | |
| WHT/YEL | 22 | S-1460-22-9-4 | | | SOLDER | | |
| WHT/GRN | 22 | S-1460-22-9-5 | | | | | |
| WHT/BLU | 22 | S-1460-22-9-6 | | | | | |
| WHT/TAN | 22 | S-1460-22-9-10 | | | | | |
| WHT/BLU | 22 | S-1460-22-9-6 | | | | | |
| TAN/WHT | 22 | S-1460-22-10-9 | | | | | |
| BLU/GRN | 22 | S-1460-22-6-5 | | | | | |
| GRY/BLU | 22 | S-1460-22-8-6 | | | | | |
| WHT/YEL | 22 | S-1460-22-9-4 | | | | | |
| BLU/GRN | 22S | S-1461-22-6-5 | | | SOLDER | | |
| BLU/YEL | 22S | S-1461-22-6-4 | | | S-1370-1 | | |
| BLK/BLU | 22 | S-1460-22-0-6 | | | SOLDER | | |
| BLACK | 16 | S-1460-16-0 | | | SOLDER | | |
| BLK/RED | 22 | S-1460-22-0-2 | | | SOLDER | | |
| BLACK | 16 | S-1460-16-0 | | | S-1367-2-8 | | |
| RED/BLU | 16 | S-1460-16-2-6 | | | SOLDER | | |
| RED/BLK | 18 | S-1460-18-2-0 | | | | | |
| TAN/BLU | 22 | S-1460-22-10-6 | | | | | |
| TAN/BLU | 22 | S-1460-22-10-6 | | | SOLDER | | |
| RED | 16 | S-1460-16-2 | | | S-1370-2 | | |
| BLU/BLK | 22 | S-1460-22-6-0 | | | SOLDER | | |
| BLU/YEL | 22 | S-1460-22-6-4 | | | SOLDER | | |
| YELLOW | 18 | S-1460-18-4 | | SOLDER | S-1370-1 | 1270466 | |

WIRE TABLE

| ITEM NO | PART NO | DESCRIPTION | INSTALLED ON |
|---|---|---|---|
| 25 | MS25041-1-328 | LIGHT, CLEAR | |
| 24 | MS25041-10-328 | LIGHT, BLUE | |
| 23 | MS25041-4-328 | LIGHT, AMBER | |
| 22 | S-382-2 | SWITCH | |
| 21 | 40Ω 3 WATT | RESISTER (OM) | |
| 20 | 0713743-1 | BUS BAR | |
| 19 | S-1360-10 | CIRCUIT BREAKER | |
| 18 | RED | WIRE | |
| 17 | R-12½-75-RS34 | RHEOSTAT (TRTA) | |
| 16 | YELLOW | WIRE | |
| 15 | 0770033-120 | CABLE ASSY | |
| 14 | 0770033-85 | CABLE ASSY | |
| 13 | 0770033-117 | CABLE ASSY | |
| 12 | 0770625-13 | ANT. INSTL-MKR BCN | |
| 11 | 25060 | ANT. INSTL-VHF | (ARC) |
| 10 | 0770625-12 | ANT. INSTL-OMNI | |
| 9 | S-1360-5 | CIRCUIT BREAKER | |
| 8 | 126-195 | CONNECTOR (AMBE) | |
| 7 | 27826 | CONNECTOR KIT (ARC) | |
| 6 | 27825 | CONNECTOR KIT (ARC) | |
| 5 | 27827 | CONNECTOR KIT (ARC) | |
| 4 | 31630-0014 | DYNAVERTER (ARC) | |
| 3 | 1 | INDICATOR (ARC) | |
| 2 | 24660 | CONVERTER (ARC) | |
| 1 | 24650-1000 | RCVR-XMTR (ARC) | |

EQUIPMENT TABLE

CESSNA AIRCRAFT CO. COMMERCIAL AIRCRAFT DIVISION, WICHITA, KANSAS

| | NAME | DATE |
|---|---|---|
| DRAWN | RIDDER | 8-6-63 |
| GROUP | | 10-11-63 |
| CHECK | R. Stark | 10-10-63 |
| PROJ | W. McCabe | 10-11-63 |

TITLE: WIRING DIAGRAM — CESSNA NAV/COMM 500 (OPT) (ARC TYPE 317A)

Cessna

DWG NO. 0770610

| SUPERSEDED BY | PAGE | SUPERSEDES | MODEL | REV | PAGE |
|---|---|---|---|---|---|
| 0770750 | 2.19.1.0 | 0770610 PAGE 17.3 | 182 | A | 17.3.1 |

FORM NO. 80-161

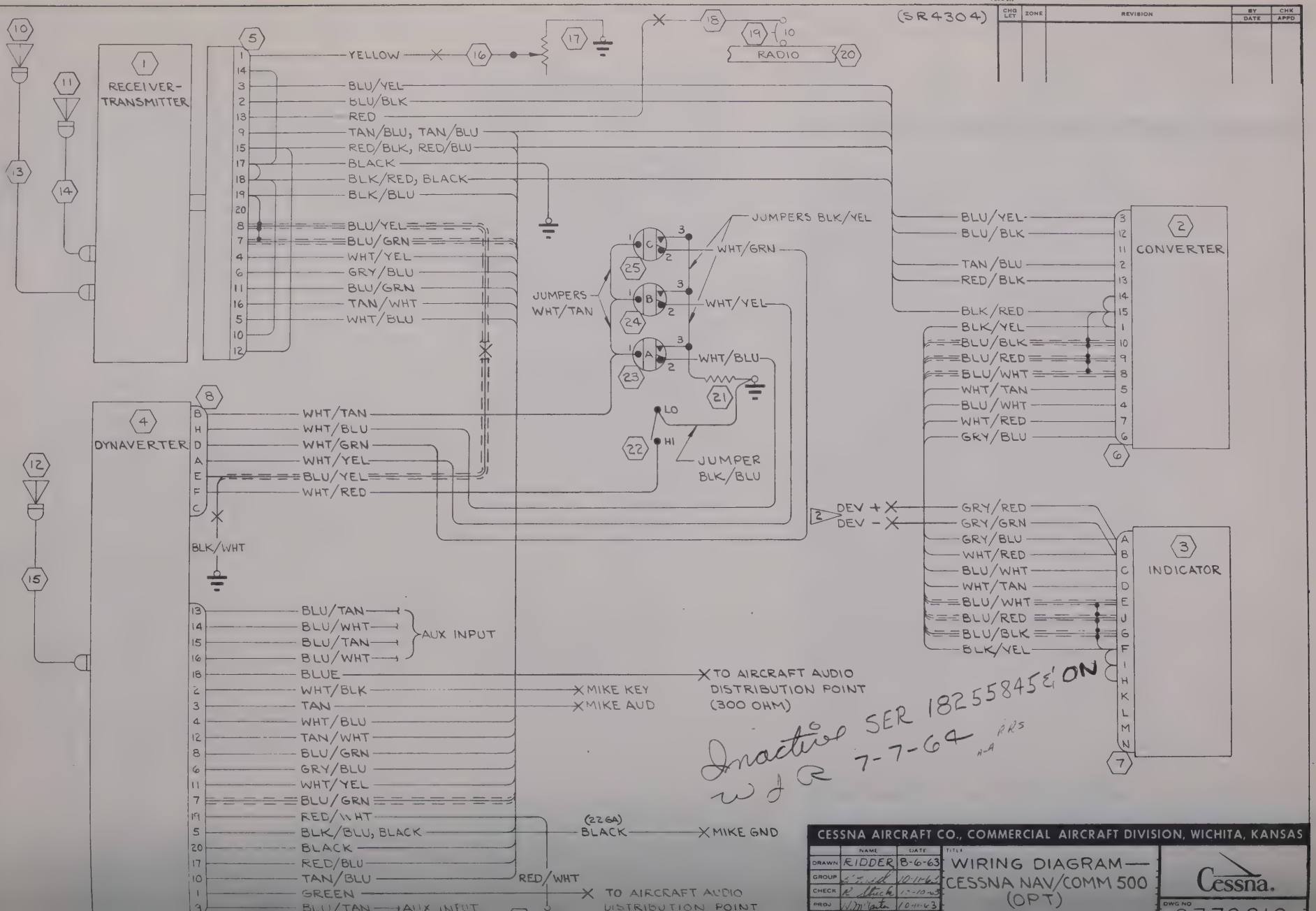
(SR4304)
CHG LET
ZONE
REVISION
BY DATE
CHK APPD
1 RECEIVER-TRANSMITTER
2 CONVERTER
3 INDICATOR
4 DYNAVERTER
5
6
7
8
10
11
12
13
14
15
16
17
18
19 10
RADIO 20
21
22
23
24
25
YELLOW
BLU/YEL
BLU/BLK
RED
TAN/BLU, TAN/BLU
RED/BLK, RED/BLU
BLACK
BLK/RED, BLACK
BLK/BLU
BLU/YEL
BLU/GRN
WHT/YEL
GRY/BLU
BLU/GRN
TAN/WHT
WHT/BLU
JUMPERS BLK/YEL
WHT/GRN
JUMPERS WHT/TAN
WHT/YEL
WHT/BLU
LO
HI
JUMPER BLK/BLU
WHT/TAN
WHT/BLU
WHT/GRN
WHT/YEL
BLU/YEL
WHT/RED
BLK/WHT
BLU/YEL-
BLU/BLK
TAN/BLU
RED/BLK
BLK/RED
BLK/YEL
BLU/BLK
BLU/RED
BLU/WHT
WHT/TAN
BLU/WHT
WHT/RED
GRY/BLU
DEV +
DEV -
GRY/RED
GRY/GRN
GRY/BLU
WHT/RED
BLU/WHT
WHT/TAN
BLU/WHT
BLU/RED
BLU/BLK
BLK/YEL
BLU/TAN
BLU/WHT
BLU/TAN
BLU/WHT
AUX INPUT
BLUE
WHT/BLK
TAN
WHT/BLU
TAN/WHT
BLU/GRN
GRY/BLU
WHT/YEL
BLU/GRN
RED/WHT
BLK/BLU, BLACK
BLACK
RED/BLU
TAN/BLU
GREEN
BLU/TAN
AUX INPUT
TO AIRCRAFT AUDIO DISTRIBUTION POINT (300 OHM)
MIKE KEY
MIKE AUD
(226A) BLACK
MIKE GND
RED/WHT
TO AIRCRAFT AUDIO DISTRIBUTION POINT
Inactive SER 18255845 & ON
w d R 7-7-64
CESSNA AIRCRAFT CO., COMMERCIAL AIRCRAFT DIVISION, WICHITA, KANSAS
NAME
DATE
DRAWN EIDDER 8-6-63
GROUP 10-11-63
CHECK 10-10-63
PROJ 10-11-63
WIRING DIAGRAM — CESSNA NAV/COMM 500 (OPT)
Cessna.
DWG NO

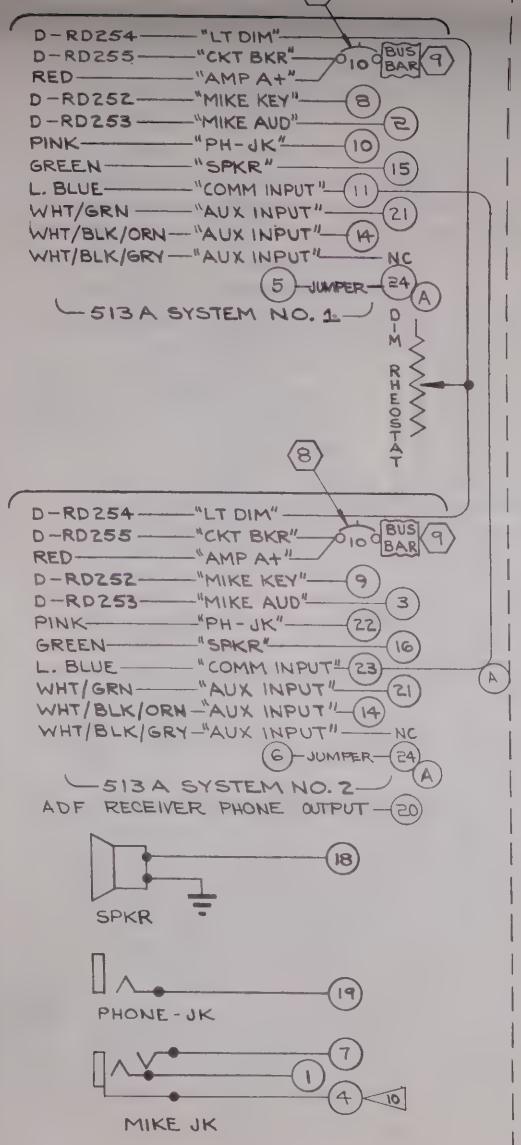


TYPICAL INTERCONNECTION OF DUAL 513A SYSTEM AND AN ADF RECEIVER (521A OR ADF-T12B)

11

NOTES: CONTINUED

7. "PH JK" WIRE IS CONNECTED TO "COMM-INPUT" CIRCUIT AND TO HEADSET JACK BY A SPKR-PHONE SWITCH WHEN AUDIO SWITCHING IS EMPLOYED. WHEN EXTERNAL AUDIO SWITCHING IS NOT REQD, CONNECT "PH JK" WIRE DIRECTLY TO HEADSET JACK AND JUMPER-WIRE PINS "J" & "EE" AT THE ACCESSORY UNIT.

8. TRANSMITTER SELECTOR SWITCH IS DESIGNED FOR USE WITH DUAL 513A SYSTEMS. AUDIO AMPLIFIER SYSTEMS ARE OPERATED "ALWAYS HOT" AS DESCRIBED IN NOTE 6. SPEAKER OUTPUTS FROM EACH SYSTEM DRIVE EITHER A 5 OHM, 5 WATT DUMMY LOAD OR THE SHIP'S SPEAKER AS DETERMINED BY THE TRANSMITTER SELECTED. (REF 0770610 PAGE 17.6)

9. WHEN AN OPTIONAL NAV-O-MATIC AUTOPILOT WITH OMNI COUPLER IS COMBINED WITH A 513A SYSTEM, ADD (2) 22 GA. WIRES AS SHOWN TO PINS "K" AND "P". WIRES TO BE 24 INCH LONG & LABLED "DEV+" & "DEV-" AS SHOWN.

10. MIKE JACK IS GNDED AT TRANS SELECTOR SWITCH ON DUAL INSTL SO MUTING RELAY WILL FUNCTION ONLY WHEN TRANS SELECTOR SWITCH IS CORRECTLY POSITIONED. I.E. WHEN TRANS #2 IS SELECTED & THERE IS NO 2ND TRANS INSTALLED; AUDIO MUTING WILL NOT OCCUR.

11. CIRCLED NUMBERS "◯" REFER TO TERMINALS ON TRANS-AUDIO SEL SWITCH ASSY (REF 0770610, PAGE 17.6)

| | | | |
|---|---|---|---|
| A | BY REV: ADDED JUMPER BETWEEN (11) & (5) REVISED NOTE 10 ADDED JUMPER WIRE 5 | H L W 10-9-63 | RRS |
| B | TITLE WAS ARC TYPE 513A VHF NAVCOM RADIO SYSTEM (OPT) | G L W 12-3-63 | RRS |

| WIRE CODE NO. | GA | MATERIAL | LG | TERMINALS | | N/A | SERIALS |
|---|---|---|---|---|---|---|---|
| D-RD284 | 22 | | | | SOLDER | SOLDER | 0770677 |
| D-RD283 | 22 | | | | | | |
| D-RD282 | 22S | | | | | | 5 |
| D-RD281 | 22S | | | | | | |
| D-RD280 | 22 | | | | | | |
| D-RD279 | 22 | | | | | | |
| D-RD278 | 22 | | | | | | |
| D-RD277 | 22 | | | | | | |
| D-RD276 | 22 | | | | | | |
| D-RD275 | 16 | | | | | | |
| D-RD274 | 22 | | | | | | |
| D-RD273 | 22 | | | | | | |
| D-RD272 | 18 | | | | | | |
| D-RD271 | 22 | | | | | | |
| D-RD270 | 22 | | | | | | |
| D-RD269 | 22 | | | | | | |
| D-RD268 | 22S | | | | | | |
| D-RD267 | 22 | | | | | | |
| D-RD266 | 22 | | | | | | |
| D-RD265 | 20 | | | | | | |
| D-RD264 | 22 | | | | | | |
| D-RD263 | 16 | | | | | | |
| D-RD262 | 22 | | | | | | |
| D-RD261 | 22S | | | | | | |
| D-RD260 | 22S | | | | | | |
| D-RD259 | 22S | | | | | | |
| D-RD258 | 22S | | | | | | |
| D-RD257 | 22S | | | | | | |
| D-RD256 | 22S | | | | | | 5 |
| D-RD255 | 18 | | | | | | |
| D-RD254 | 20 | | | | | | |
| D-RD253 | 22S | | | | | | |
| D-RD252 | 22 | | | | SOLDER | | |
| D-RD251 | 16 | | | | SOLDER | S-13G7-2-8 | 0770677 |

Impactive SER (S/R 1825059 & ON
w.d. O.R. 8-9-63
RRS made NAV

WIRE TABLE

| ITEM NO | PART NO. | DESCRIPTION | INSTALLED ON |
|---|---|---|---|

EQUIPMENT TABLE

CESSNA AIRCRAFT CO. COMMERCIAL AIRCRAFT DIVISION WICHITA, KANSAS

| | NAME | DATE |
|---|---|---|
| DRAWN | H WISE | 7-10-62 |
| GROUP | Jack Moody | 7-13-62 |
| CHECK | R. Stucki | 7-13-62 |
| PROJ | H. McCabe | 7-17-62 |

TITLE: WIRING DIAGRAM — CESSNA NAV-COM 300 (OPT) (ARC TYPE 513A)

Cessna.

DWG NO: 0770610

| SUPERSEDED BY | SUPERSEDES | MODEL: | REV. | PAGE: |
|---|---|---|---|---|
| | | 182 | B | 17.4 |

FORM NO. 80-161

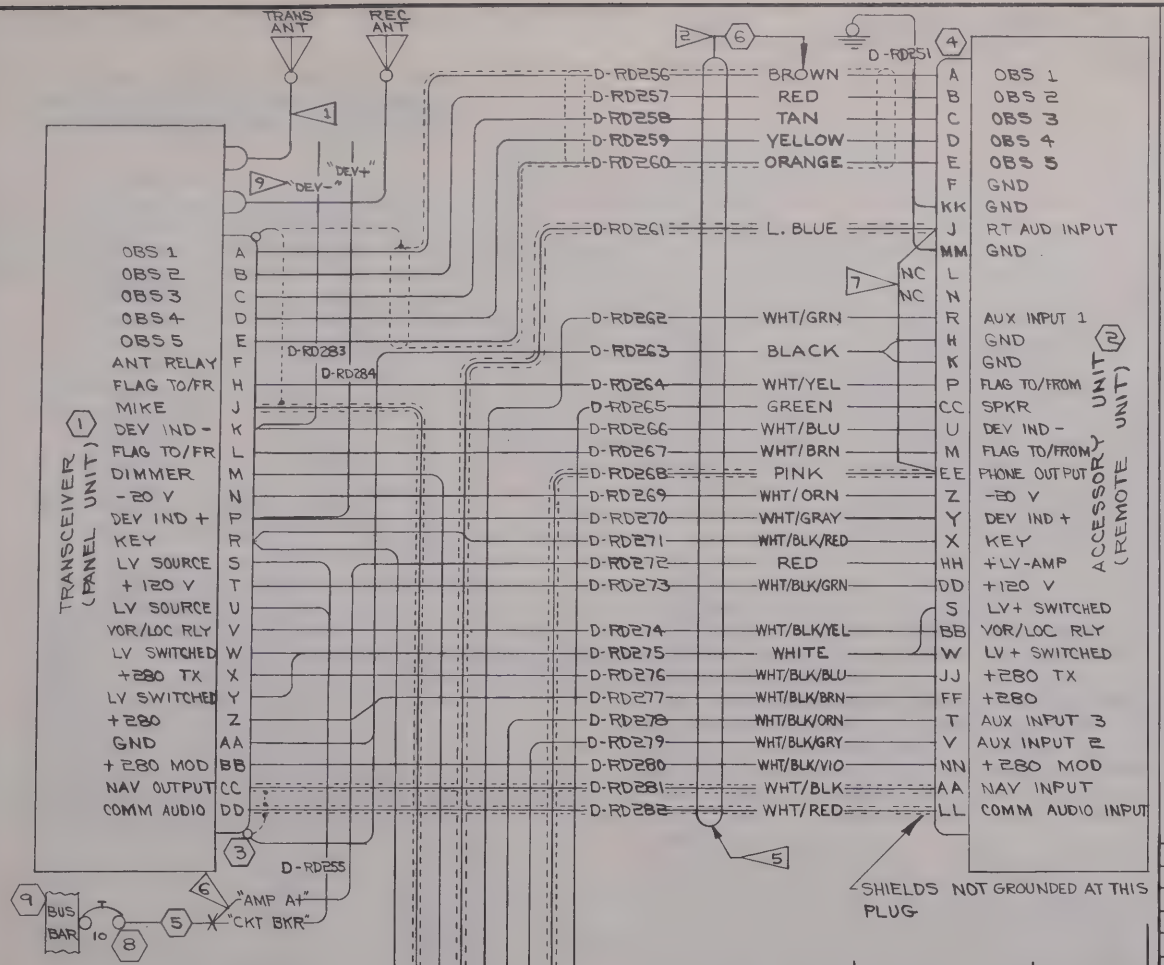


| | | | |
|---|---|---|---|
| 9 | 1270429-1 | BUS BAR | |
| 8 | S-1232-10 | CIRCUIT BREAKER | |
| 7 | | | |
| 6 | NO.161548 | CABLE MATL(ELAG | |
| 5 | 0770610-RD101 | WIRE | |
| 4 | MRE34S G H/VL | CONNECTOR ASSY(WIQ) | |
| 3 | XMRE26S G 1B017 | CONNECTOR ASSY(WIQ) | |
| 2 | RTA-5BA | ACCESSORY UNIT | |
| 1 | RT-513A | TRANSCEIVER | |
| PART NO. | | DESCRIPTION | INSTALLED ON |

(6R3901)

| CHG LET | REVISION | BY / DATE | CHK / APPD |
|---|---|---|---|
| A | TITLE WAS ARC TYPE 513A VHF NAV/COM RADIO SYSTEM (OPT) | GLW 12-3-63 | RES |

NOTES:

1. TRANSMITTING & RECEIVING ANTENNA LEAD-IN CABLES ARE ATTACHED TO DUST COVER CONNECTORS ON INSTL IN AIRPLANE.
2. (6) CABLE MATERIAL IS A SPECIAL 27 CONDUCTOR COLOR CODED CABLE WITH CONDUCTOR GAUGE & SHIELDS AS INDICATED IN B/M FOR INDIVIDUAL WIRES EXCEPT (5) WIRES BETWEEN PINS "A" TO "E" ARE ENCLOSED IN A COMMON SHIELD.
3. WIRES NO. D-RD251 THRU D-RD255 ARE INDIVIDUAL WIRES AND THEY ARE APPLICABLE TO ALL HARNESS ASSYS.
4. WIRES NO. D-RD252 THRU D-RD255 TO BE CODED "MIKE KEY", "MIKE AUD", "LT DIM", & "CKT BKR" RESPECTIVELY. NUMERICAL CODING PER CES 1100 IS OPTIONAL ON THESE WIRES.
5. NUMBERS ARE ASSIGNED TO THESE WIRES TO ALLOW FABRICATION & IDENTIFICATION OF THE HARNESS ASSY USING INDIVIDUAL WIRES WHEN COLOR CODED MULTI-CONDUCTOR CABLE MATERIAL IS NOT USED.
6. WIRE NO D-RD272 IS CONNECTED TO CKT BKR AS SHOWN WHEN AUDIO MODULATION PORTION OF RTA-513A IS UTILIZED AS AN "ALWAYS HOT" AUDIO ISOLATION AMPLIFIER FOR OTHER EQUIPMENT. CONNECT D-RD272 TO PIN W & Y WHEN THE AMPLIFIER IS TO BE ENERGIZED BY THE 513A POWER SWITCH.

(SEE PAGE 17.4 FOR NOTE 7 & HIGHER)

Inactive SER 18255059 & ON
W.J.R. 8-9-63
RES

SEE PAGE 17.4 FOR WIRE TABLE

| WIRE CODE NO. | GA | MATERIAL | LG | TERMINALS | SERIALS |
|---|---|---|---|---|---|

WIRE TABLE

CESSNA AIRCRAFT CO COMMERCIAL AIRCRAFT DIVISION WICHITA, KANSAS

| | NAME | DATE |
|---|---|---|
| DRAWN | H WISE | 7-10-62 |
| GROUP | | 7-13-62 |
| CHECK | R. Stuck | 7-13-62 |
| PROJ | W. McCosta | 7-17-62 |

TITLE: WIRING DIAGRAM — CESSNA NAV-COM 300 (OPT) (ARC TYPE 513A)

Cessna.

DWG NO. 0770610

| | BY REVISION: TITLE WAS ARC TYPE 521A ADF (OPT) ITEM 3 WAS IN-501A ITEM 2 WAS L-521A LOOP & ITEM 1 WAS R-521A | WJR 12-3-63 | RRS ALA LPB NMC |
|---|---|---|---|
| A | | | |

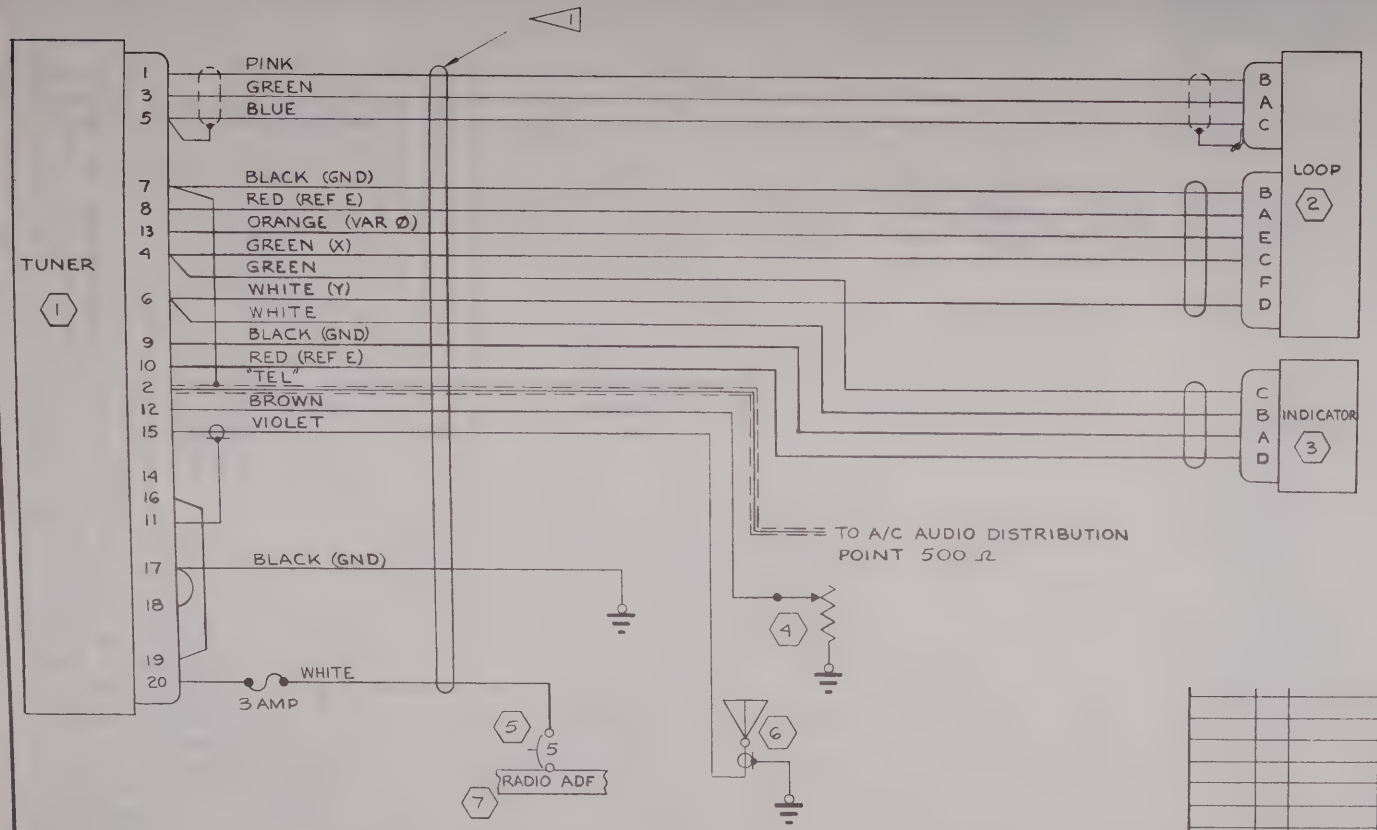


INACTIVE
8-25-64 LPB
SER 18255845 & ON
RRS ALA

NOTES:
1. ALL WIRES ARE PART OF 28340-1000 TUNER. (REF 0770621)
2. CONNECTIONS SHOWN ARE FOR TOP MOUNTED LOOP & SENSE ANTENNAS.

| ITEM NO | PART NO. | DESCRIPTION | INSTALLED ON |
|---|---|---|---|
| 7 | 0713743-1 | BUS BAR | |
| 6 | 0770625-1 | LF ANTENNA | |
| 5 | S-1360-5 | CIRCUIT BREAKER | |
| 4 | R-12½-75-RS34 | RHEOSTAT (TRTA) | |
| 3 | 50310 | INDICATOR (ARC) | |
| 2 | 28360 | LOOP (ARC) | |
| 1 | 28340-1000 | TUNER (ARC) | |

EQUIPMENT TABLE

| WIRE CODE NO. | GA | MATERIAL | LG | TERMINALS | | SERIALS |
|---|---|---|---|---|---|---|
| | | | | | | |

WIRE TABLE

CESSNA AIRCRAFT CO., COMMERCIAL AIRCRAFT DIVISION, WICHITA, KANSAS

| | NAME | DATE |
|---|---|---|
| DRAWN | G WOOD | 7-16-62 |
| GROUP | NEW | 8-10-62 |
| CHECK | R Stuck | 8-10-62 |
| PROJ | Wm McCarter | 8-10-62 |

TITLE: WIRING DIAGRAM — CESSNA ADF 300 (OPT) (ARC TYPE 521A)

Cessna.

DWG NO 0770610

| SUPERSEDED BY | PAGE | SUPERSEDES | MODEL | REV | PAGE |
|---|---|---|---|---|---|
| 0770750 | 2-12 | | 182 | A | 17.5 |

FORM NO. 80-161

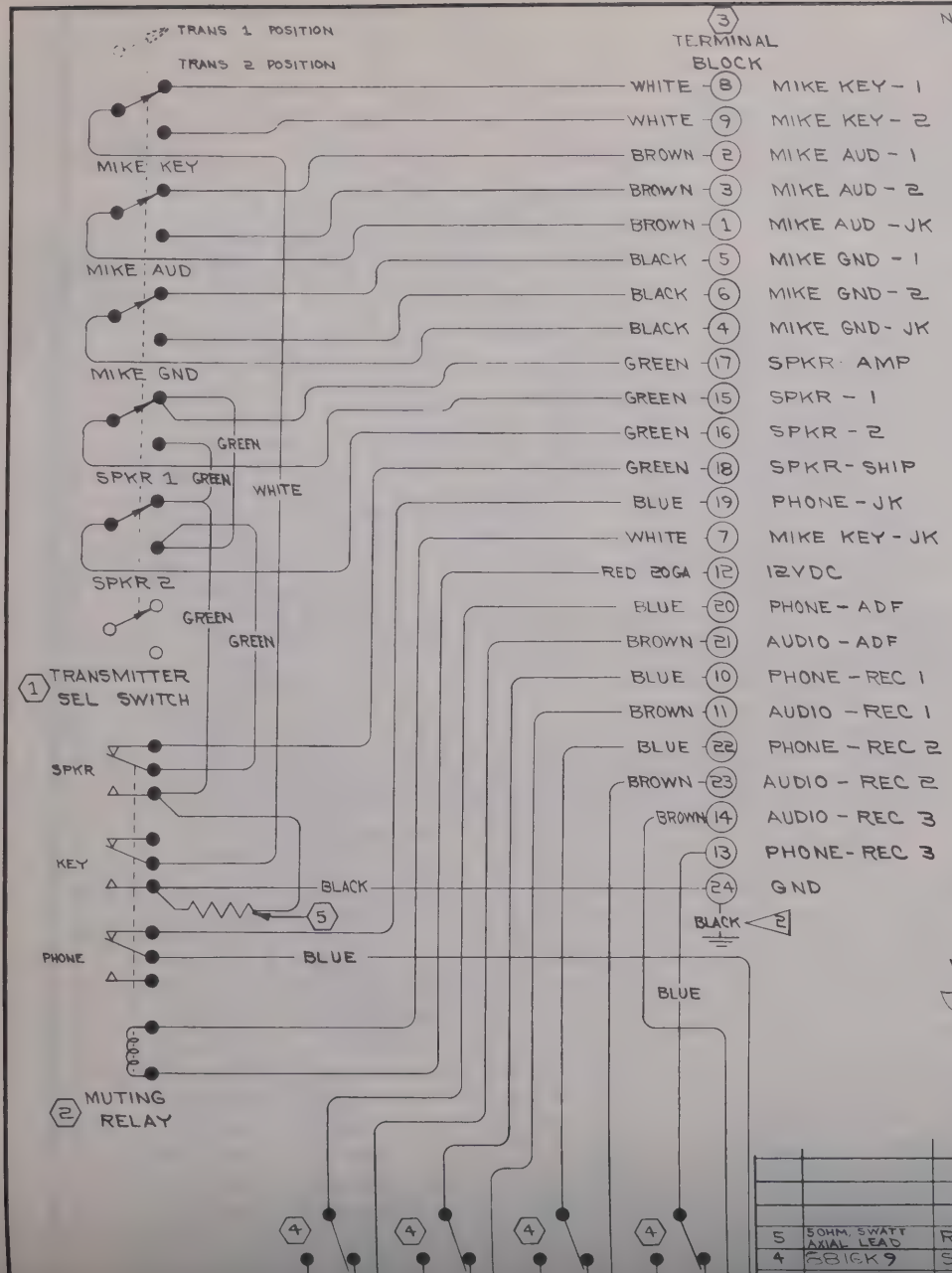


NOTES: (SR 3901)

1. ALL WIRES TO BE 22GA COLOR CODED BELDEN WIRE NO. 8524 EXCEPT THE RED WIRE TO BE 20 GA. BELDEN WIRE NO. 8523.
2. CONNECT TERMINAL 24 TO MOUNTING ENCLOSURE TO PROVIDE AIRFRAME GND
3. REFER TO 1270616 FOR SWITCH ASSEMBLY DETAILS

| CHG LET | REVISION | BY / DATE | CHK / APPD |
|---|---|---|---|
| | | | |

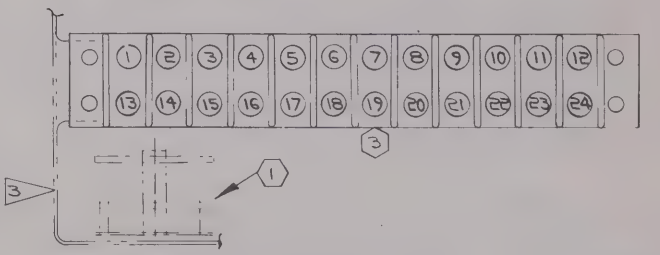


TOP VIEW OF TERMINAL BLOCK AS ASSEMBLED IN SWITCH BOX
TERMINAL BLOCK TO BE CONNECTED TO OTHER COMPONENTS IN BOX SO THAT CIRCUIT FUNCTION & TERMINAL NUMBERS SHOWN ON SCHEMATIC AGREE WITH THIS VIEW

Inactive
SER (SR4099) & ON
W.J.G. 2-15-63
TM RES

| WIRE CODE NO. | GA | MATERIAL | LG | TERMINALS | | N/A | SERIALS |
|---|---|---|---|---|---|---|---|
| | | 1 | | SOLDER | SOLDER | 1270616 | |

WIRE TABLE

| | | |
|---|---|---|
| 5 | 50HM, SWATT AXIAL LEAD | RESISTOR (OM) |
| 4 | 8816K9 | SWITCH (CUT) |
| 3 | 601-2104-12 | TERMINAL BLOCK (KKE) |

CESSNA AIRCRAFT CO. COMMERCIAL AIRCRAFT DIVISION WICHITA, KANSAS

| | NAME | DATE |
|---|---|---|
| DRAWN | H WISE | 7-12-62 |
| GROUP | C.V. Matt | 7-20-62 |

TITLE WIRING DIAGRAM — TRANSMITTER AND

Cessna.

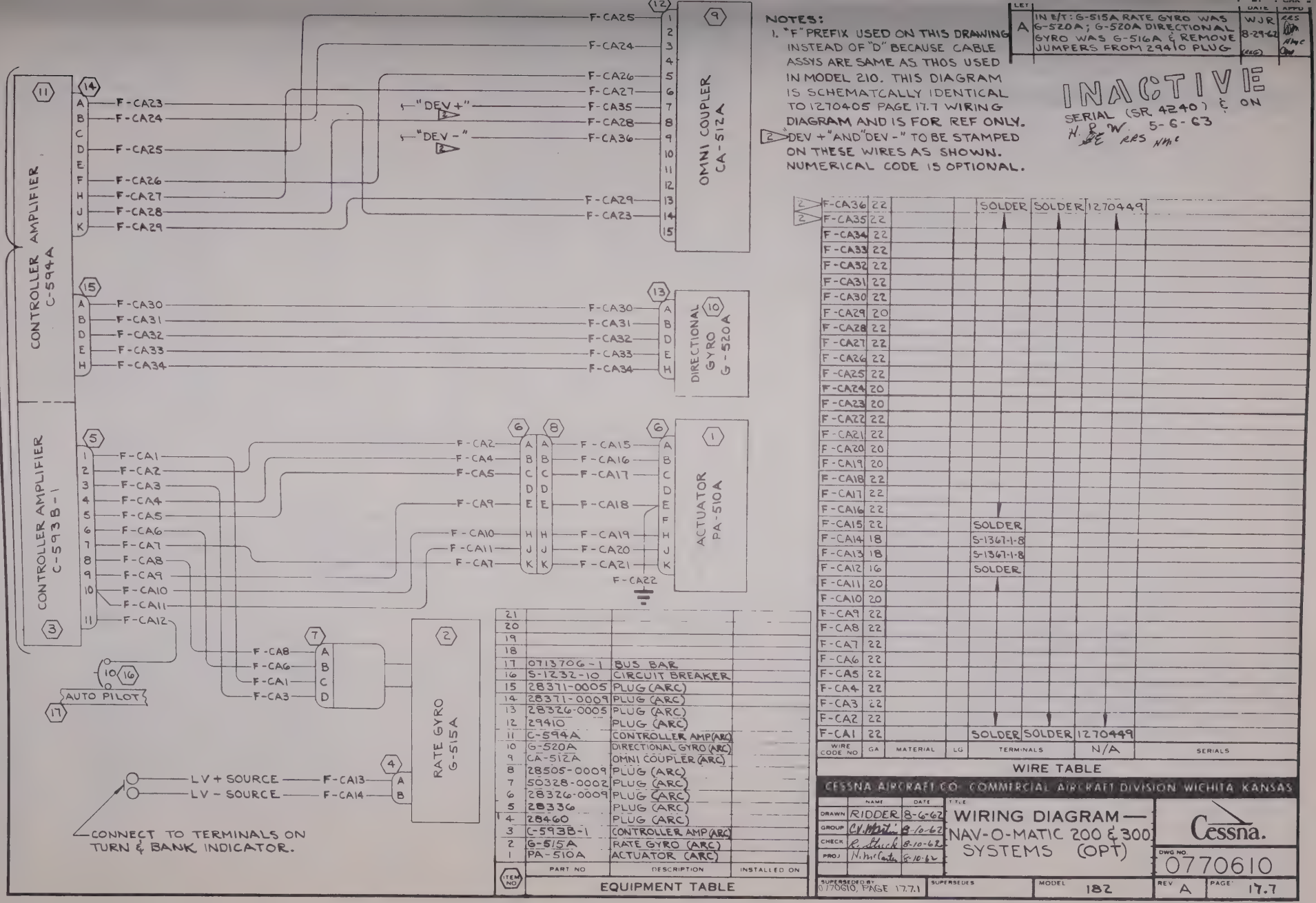


**NOTES:**

1. "F" PREFIX USED ON THIS DRAWING INSTEAD OF "D" BECAUSE CABLE ASSYS ARE SAME AS THOS USED IN MODEL 210. THIS DIAGRAM IS SCHEMATCALLY IDENTICAL TO 1270405 PAGE 17.7 WIRING DIAGRAM AND IS FOR REF ONLY.
2. "DEV +" AND "DEV -" TO BE STAMPED ON THESE WIRES AS SHOWN. NUMERICAL CODE IS OPTIONAL.

| LET | DESCRIPTION | DATE | APPD |
|---|---|---|---|
| A | IN E/T: G-515A RATE GYRO WAS G-520A; G-520A DIRECTIONAL GYRO WAS G-516A & REMOVE JUMPERS FROM 29410 PLUG | WJR 8-29-62 | RRS NMC |

INACTIVE
SERIAL (SR 4240) & ON
H. B. W. 5-6-63
RRS NMC

| WIRE CODE NO | GA | MATERIAL | LG | TERMINALS | | N/A | SERIALS |
|---|---|---|---|---|---|---|---|
| F-CA36 | 22 | | | SOLDER | SOLDER | 1270449 | |
| F-CA35 | 22 | | | | | | |
| F-CA34 | 22 | | | | | | |
| F-CA33 | 22 | | | | | | |
| F-CA32 | 22 | | | | | | |
| F-CA31 | 22 | | | | | | |
| F-CA30 | 22 | | | | | | |
| F-CA29 | 20 | | | | | | |
| F-CA28 | 22 | | | | | | |
| F-CA27 | 22 | | | | | | |
| F-CA26 | 22 | | | | | | |
| F-CA25 | 22 | | | | | | |
| F-CA24 | 20 | | | | | | |
| F-CA23 | 20 | | | | | | |
| F-CA22 | 22 | | | | | | |
| F-CA21 | 22 | | | | | | |
| F-CA20 | 20 | | | | | | |
| F-CA19 | 20 | | | | | | |
| F-CA18 | 22 | | | | | | |
| F-CA17 | 22 | | | | | | |
| F-CA16 | 22 | | | | | | |
| F-CA15 | 22 | | | SOLDER | | | |
| F-CA14 | 18 | | | S-1367-1-8 | | | |
| F-CA13 | 18 | | | S-1367-1-8 | | | |
| F-CA12 | 16 | | | SOLDER | | | |
| F-CA11 | 20 | | | | | | |
| F-CA10 | 20 | | | | | | |
| F-CA9 | 22 | | | | | | |
| F-CA8 | 22 | | | | | | |
| F-CA7 | 22 | | | | | | |
| F-CA6 | 22 | | | | | | |
| F-CA5 | 22 | | | | | | |
| F-CA4 | 22 | | | | | | |
| F-CA3 | 22 | | | | | | |
| F-CA2 | 22 | | | | | | |
| F-CA1 | 22 | | | SOLDER | SOLDER | 1270449 | |

WIRE TABLE

| ITEM NO | PART NO | DESCRIPTION | INSTALLED ON |
|---|---|---|---|
| 21 | | | |
| 20 | | | |
| 19 | | | |
| 18 | | | |
| 17 | 0713706-1 | BUS BAR | |
| 16 | S-1232-10 | CIRCUIT BREAKER | |
| 15 | 28371-0005 | PLUG (ARC) | |
| 14 | 28371-0009 | PLUG (ARC) | |
| 13 | 28326-0005 | PLUG (ARC) | |
| 12 | 29410 | PLUG (ARC) | |
| 11 | C-594A | CONTROLLER AMP (ARC) | |
| 10 | G-520A | DIRECTIONAL GYRO (ARC) | |
| 9 | CA-512A | OMNI COUPLER (ARC) | |
| 8 | 28505-0009 | PLUG (ARC) | |
| 7 | 50328-0002 | PLUG (ARC) | |
| 6 | 28326-0009 | PLUG (ARC) | |
| 5 | 28336 | PLUG (ARC) | |
| 4 | 28460 | PLUG (ARC) | |
| 3 | C-593B-1 | CONTROLLER AMP (ARC) | |
| 2 | G-515A | RATE GYRO (ARC) | |
| 1 | PA-510A | ACTUATOR (ARC) | |

EQUIPMENT TABLE

CESSNA AIRCRAFT CO. COMMERCIAL AIRCRAFT DIVISION WICHITA KANSAS

| | NAME | DATE |
|---|---|---|
| DRAWN | RIDDER | 8-6-62 |
| GROUP | C.V. Mott | 8-10-62 |
| CHECK | R. Struck | 8-10-62 |
| PROJ | N. McCarter | 8-10-62 |

TITLE: WIRING DIAGRAM — NAV-O-MATIC 200 & 300 SYSTEMS (OPT)

Cessna.

DWG NO. 0770610

SUPERSEDED BY 0770610, PAGE 17.7.1 | SUPERSEDES | MODEL 182 | REV A | PAGE 17.7

FORM NO 80-161

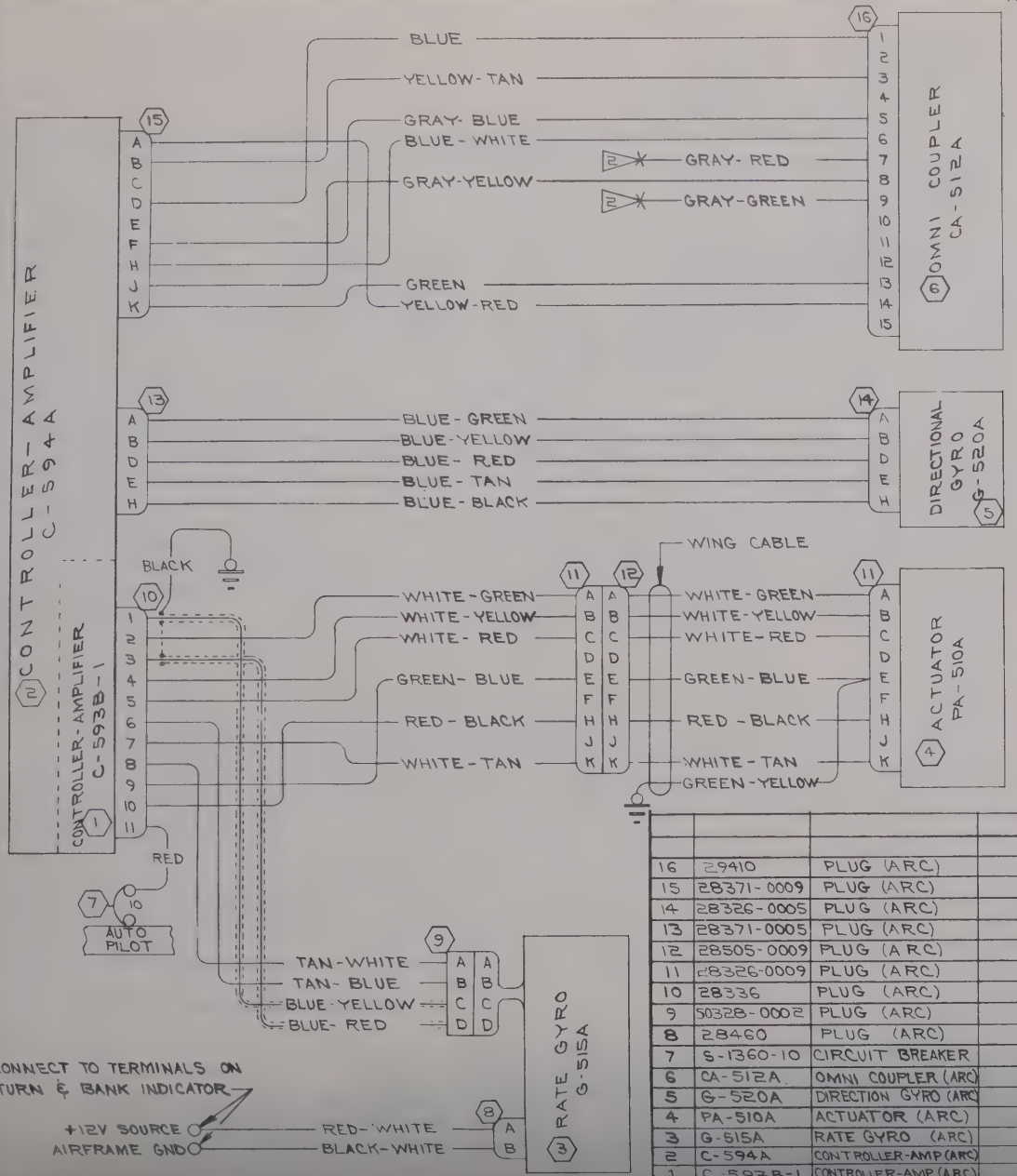


NOTES. (SR 4240)

1. WHERE WIRE CODE LISTS 2 COLORS, 1ST COLOR IS BASE COLOR & 2ND COLOR IS THE STRIPE.
2. GRAY-RED WIRE IS "DEV+" CIRCUIT & GRAY-GREEN WIRE IS "DEV-" CIRCUIT FOR CONNECTION TO A VOR INDICATOR.
3. NAV-O-MATIC 300 SYSTEM INCLUDES ALL ITEMS EXCEPT (1), 200 SYSTEM INCLUDES (1) (3) (4) (7) & ASSOCIATED PLUGS & WIRES
4. THIS DRAWING IS SCHEMATICALLY IDENTICAL TO 1270405, PAGE 17.7.1 AND IS FOR REF ONLY. CABLE ASSYS TO BE FABRICATED PER 1270405, PAGE 17.7.1

| CHG LET | REVISION | BY / DATE | CHK / APPD |
|---|---|---|---|
| | | | |

| WIRE CODE NO. | GA | MATERIAL | LG | TERMINALS | | NEXT ASSEMBLY | SERIALS |
|---|---|---|---|---|---|---|---|
| BLACK | 16 | S-1460-16-0 | | SOLDER | S-1367-2-8 | 1270449 | |
| YELLOW/RED | 20 | S-1460-20-4-2 | | | SOLDER | | |
| GREEN | 20 | S-1460-20-5 | | | SOLDER | | |
| GRAY/GREEN | 22 | S-1460-22-8-5 | | | S-1370-0 | | |
| GRAY/RED | 22 | S-1460-22-8-2 | | | S-1370-0 | | |
| GRAY/YELLOW | 22 | S-1460-22-8-4 | | | SOLDER | | |
| BLUE/WHITE | 22 | S-1460-22-6-9 | | | | | |
| GRAY/BLUE | 22 | S-1460-22-8-6 | | | | | |
| YELLOW/TAN | 20 | S-1460-20-4-10 | | | | | |
| BLUE | 22 | S-1460-22-6 | | | | | |
| BLUE/BLACK | 22 | S-1460-22-6-0 | | | | | |
| BLUE/TAN | 22 | S-1460-22-6-10 | | | | | |
| BLUE/RED | 22 | S-1460-22-6-2 | | | | | |
| BLUE/YELLOW | 22 | S-1460-22-6-4 | | | | | |
| BLUE/GREEN | 22 | S-1460-22-6-5 | | | | | |
| WHITE/GREEN | 22 | S-1460-22-9-5 | | | | | |
| WHITE/YELLOW | 22 | S-1460-22-9-4 | | | | | |
| WHITE/RED | 22 | S-1460-22-9-2 | | | | | |
| GREEN/BLUE | 20 | S-1460-20-5-6 | | | | | |
| RED/BLACK | 18 | S-1460-18-2-0 | | | | | |
| WHITE/TAN | 22 | S-1460-22-9-10 | | | SOLDER | | |
| GREEN/YELLOW | 20 | S-1460-20-5-4 | | | S-1367-1-8 | | |
| BLACK | 18 | S-1460-18-0-9 | | | S-1367-1-8 | | |
| WHITE/RED/WHITE | 18 | S-1460-18-2-9 | | | S-1367-1-8 | | |
| RED | 16 | S-1460-16-2 | | | S-1367-2-8 | | |
| RED/BLACK | 18 | S-1460-18-2-0 | | | SOLDER | | |
| GREEN/BLUE | 20 | S-1460-20-5-6 | | | | | |
| TAN/WHITE | 22 | S-1460-22-10-9 | | | | | |
| WHITE/TAN | 22 | S-1460-22-9-10 | | | | | |
| TAN/BLUE | 22 | S-1460-22-10-6 | | | | | |
| WHITE/RED | 22 | S-1460-22-9-2 | | | | | |
| WHITE/YELLOW | 22 | S-1460-22-9-4 | | | | | |
| BLUE/RED | 22S | S-1461-22-6-2 | | | | | |
| WHITE/GREEN | 22 | S-1460-22-9-5 | | | | | |
| BLUE/YELLOW | 22S | S-1461-22-6-4 | | SOLDER | SOLDER | 1270449 | |

WIRE TABLE

| | PART NO | DESCRIPTION | INSTALLED ON |
|---|---|---|---|
| 16 | 29410 | PLUG (ARC) | |
| 15 | 28371-0009 | PLUG (ARC) | |
| 14 | 28326-0005 | PLUG (ARC) | |
| 13 | 28371-0005 | PLUG (ARC) | |
| 12 | 28505-0009 | PLUG (ARC) | |
| 11 | 28326-0009 | PLUG (ARC) | |
| 10 | 28336 | PLUG (ARC) | |
| 9 | 50328-0002 | PLUG (ARC) | |
| 8 | 28460 | PLUG (ARC) | |
| 7 | S-1360-10 | CIRCUIT BREAKER | |
| 6 | CA-512A | OMNI COUPLER (ARC) | |
| 5 | G-520A | DIRECTION GYRO (ARC) | |
| 4 | PA-510A | ACTUATOR (ARC) | |
| 3 | G-515A | RATE GYRO (ARC) | |
| 2 | C-594A | CONTROLLER-AMP (ARC) | |
| 1 | C-593B-1 | CONTROLLER-AMP (ARC) | |

CESSNA AIRCRAFT CO., COMMERCIAL AIRCRAFT DIVISION, WICHITA, KANSAS

| | NAME | DATE |
|---|---|---|
| DRAWN | H. WISE | 5-3-63 |
| GROUP | | |
| CHECK | | 5-16-63 |
| PROJ | | 5-22-63 |

TITLE: WIRING DIAGRAM — NAV-O-MATIC 200 & 300 SYSTEMS (OPT)

Cessna.

DWG NO 0770610

REV

PAGE

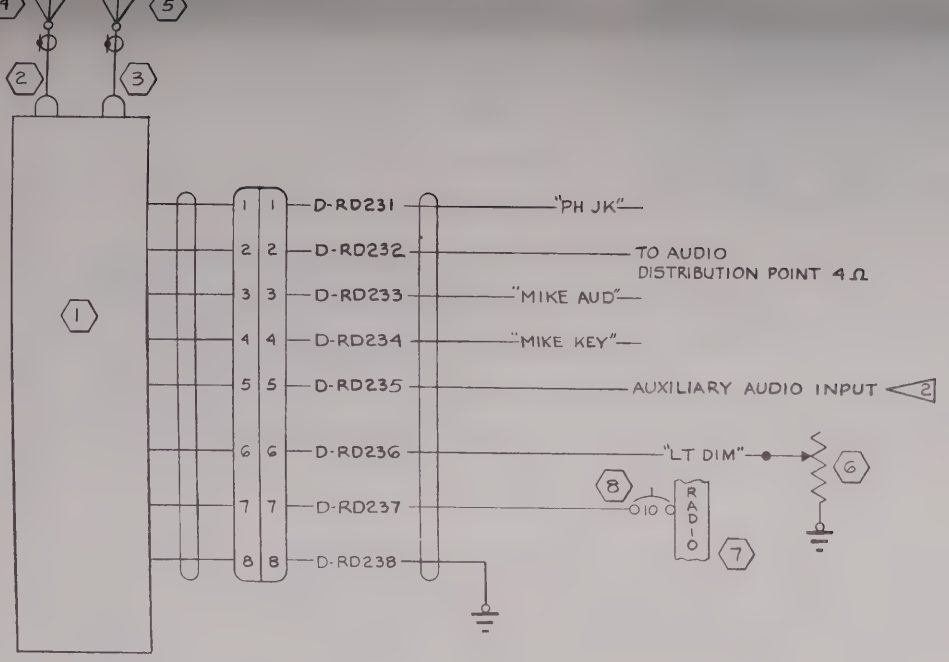


Inactive
SER 18255059 & ON
9-12-63
Gen RRS NMC

NOTES:

1. D-RD231, D-RD233, D-RD234 & D-RD236 WIRES TO BE CODED "PH-JK", "MIKE AUD" "MIKE KEY" & "LT DIM" RESPECTIVELY. NUMERICAL CODING PER CES 1100 IS OPTIONAL ON THESE WIRES.
2. END OF WIRE TO BE COVERED WITH SLEEVING AND TIED INTO CABLE UNTIL USED.
3. CABLE ASSYS MADE PER THIS DWG ARE USED ON MODELS OTHER THAN 182. CHANGES MADE TO THIS DWG SHOULD ALSO BE MADE TO WIRING DIAGRAMS ON THE OTHER MODELS USING THESE CABLE ASSYS.

| ITEM NO | PART NO. | DESCRIPTION | INSTALLED ON |
|---|---|---|---|
| 8 | S-1232-10 | CIRCUIT BREAKER | |
| 7 | 0713706-1 | BUS BAR | |
| 6 | R-12½-75-RS34 | RHEOSTAT (TRTA) | |
| 5 | 0770625-3 | VHF ANT. INSTL | |
| 4 | 0770625-12 | OMNI ANT. INSTL | |
| 3 | 0770033-95 | CABLE ASSY | |
| 2 | 0770033-96 | CABLE ASSY | |
| 1 | KX-150 | DIRECTOR (KG) | |

EQUIPMENT TABLE

| WIRE CODE NO. | GA | MATERIAL | LG | TERMINALS | | N/A | SERIALS |
|---|---|---|---|---|---|---|---|
| D-RD238 | 16 | | | S-1367-2-8 | SOLDER | 0770678 | |
| D-RD237 | 16 | | | S-1367-2-8 | | | |
| D-RD236 | 22 | | | SOLDER | | | 1 |
| D-RD235 | 22 | | | | | | |
| D-RD234 | 22 | | | SOLDER | | | 1 |
| D-RD233 | 22 | | | SOLDER | | | 1 |
| D-RD232 | 22 | | | | | | |
| D-RD231 | 22 | | | SOLDER | SOLDER | 0770678 | 1 |

WIRE TABLE

CESSNA AIRCRAFT CO. COMMERCIAL AIRCRAFT DIVISION, WICHITA, KANSAS

| | NAME | DATE |
|---|---|---|
| DRAWN | G WOOD | 8-17-62 |
| GROUP | HEW TM | 9-5-62 |
| CHECK | R. Stuck | 9-6-62 |
| PROJ | H. McCarter | 9-7-62 |

TITLE: WIRING DIAGRAM — KING KX-150 (OPT)

Cessna.

DWG NO. 0770610

SUPERSEDED BY 0770610 PAGE 17.8.1 | SUPERSEDES | MODEL: 182 3 | REV: | PAGE: 17.8

FORM NO. 80-161

| CHG LET | REVISION | BY DATE | CHK APPD |
|---|---|---|---|
| | | | |

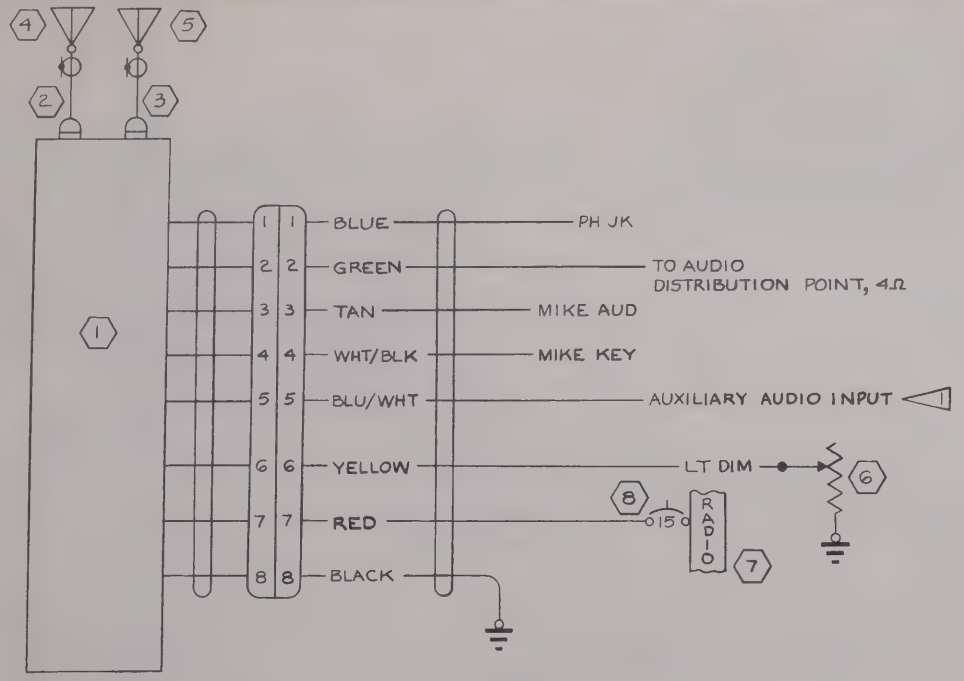


Inactive (SER 9417) & ON
11-21-63

NOTES:

1. END OF WIRE TO BE COVERED WITH SLEEVING AND TIED INTO CABLE UNTIL USED.
2. CABLE ASSYS MADE PER THIS DWG ARE USED ON MODELS OTHER THAN 182. CHANGES MADE TO THIS DWG SHOULD ALSO BE MADE TO WIRING DIAGRAMS ON THE OTHER MODELS USING THESE CABLE ASSYS.

| WIRE CODE NO. | GA | MATERIAL | LG | TERMINALS | | N/A | SERIALS |
|---|---|---|---|---|---|---|---|
| BLU/WHT | 22 | S-1460-22-69 | | SOLDER | | 0770678 | 18255059 & ON |
| BLACK | 16 | S-1460-16-0 | | ↓ | S-1367-2-8 | ↓ | ↓ |
| RED | 16 | S-1460-16-2 | | | S-1367-2-6 | | |
| YELLOW | 18 | S-1460-18-4 | | | SOLDER | | |
| WHT/BLK | 22 | S-1460-22-90 | | | | | |
| TAN | 22 | S-1460-22-10 | | | | | |
| GREEN | 20 | S-1960-20-5 | | ↓ | | ↓ | ↓ |
| BLUE | 22 | S-1460-22-6 | | SOLDER | | 0770678 | 18255059 & ON |

WIRE TABLE

| | PART NO. | DESCRIPTION | INSTALLED ON |
|---|---|---|---|
| 8 | S-1360-15 | CIRCUIT BREAKER | |
| 7 | 0713743-1 | BUS BAR | |
| 6 | R-12½-75-R534 | RHEOSTAT (TRTA) | |
| 5 | 0770625-3 | VHF ANT. INSTL | |
| 4 | 0770625-12 | OMNI ANT. INSTL | |
| 3 | 0770033-95 | CABLE ASSY | |
| 2 | 0770033-96 | CABLE ASSY | |
| 1 | KX-150 | DIRECTOR (KG) | |

CESSNA AIRCRAFT CO COMMERCIAL AIRCRAFT DIVISION, WICHITA, KANSAS

| | NAME | DATE |
|---|---|---|
| DRAWN | G WOOD | 9-13-63 |
| GROUP | | 10-14-63 |
| CHECK | R. Stice | 10-11-63 |
| PROJ | M McCarter | 10-17-63 |

TITLE: WIRING DIAGRAM — KING KX-150 (OPT)

Cessna.

DWG NO. 0770610

REV

SHEET

| | | | |
|---|---|---|---|
| A | 0770033-96 CABLE ASSY WAS 0770033-128. DELETE ▷1. ADDED 0770625-12 (SR 4917) | GLW 3-4-69 | |

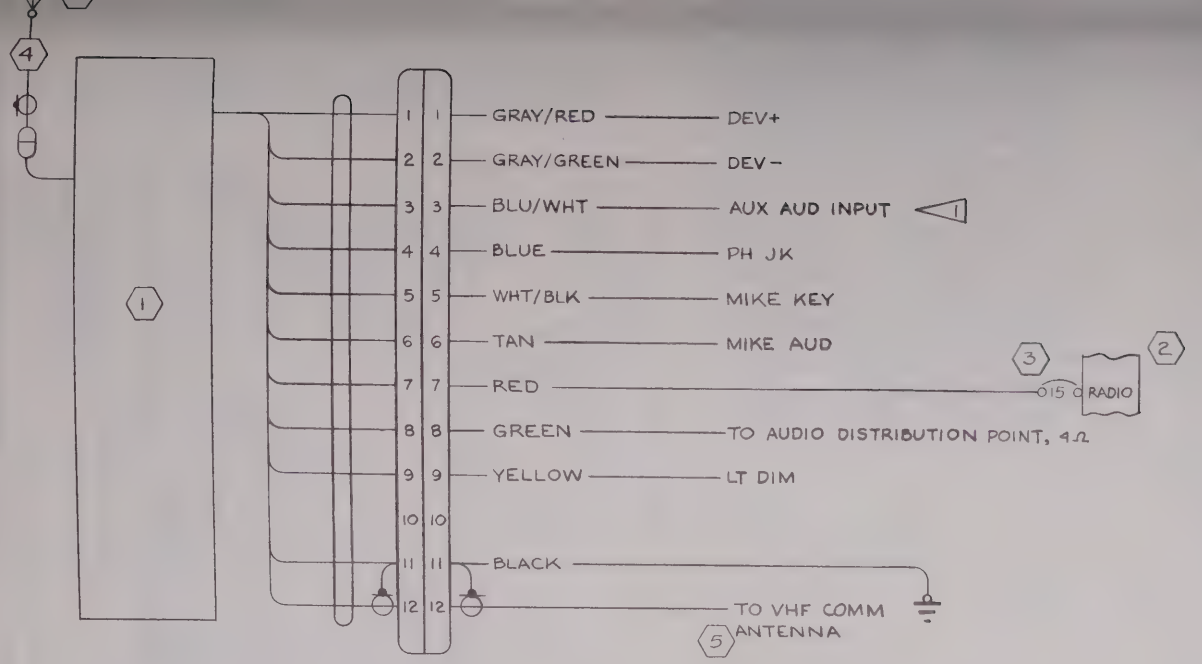


NOTES:

1. ▷1 END OF WIRE TO BE COVERED WITH SLEEVING AND TIED INTO CABLE UNTIL USED.

2.

3. ▷3 CABLE ASSYS MADE PER THIS DWG ARE USED ON MODELS OTHER THAN 182. CHANGES MADE TO THIS DWG SHOULD ALSO BE MADE TO WIRING DIAGRAMS ON THE OTHER MODELS USING THESE CABLE ASSYS

| WIRE CODE NO | GA | MATERIAL | LG | TERMINALS | | N/A | SERIALS |
|---|---|---|---|---|---|---|---|
| GRY/RED | 22 | S-1460-228-2 | | SOLDER | | 0770705 | |
| GRY/GRN | 22 | S-1460-228-5 | | | | | |
| BLU/WHT | 22 | S-1460-226-9 | | | | | |
| BLACK | 16 | S-1460-16-0 | | | S-1367-2-8 | | |
| RED | 16 | S-1460-16-2 | | | S-1367-2-6 | | |
| YELLOW | 18 | S-1460-18-4 | | | SOLDER | | |
| WHT/BLK | 22 | S-1460-229-0 | | | | | |
| TAN | 22 | S-1460-22-10 | | | | | |
| GREEN | 20 | S-1460-20-5 | | | | | |
| BLUE | 22 | S-1460-22-6 | | SOLDER | | 0770705 | |

WIRE TABLE

| ITEM NO | PART NO | DESCRIPTION | INSTALLED ON |
|---|---|---|---|
| 6 | 0770625-12 | OMNI ANT. INSTL | |
| 5 | 0770033-131 | CABLE ASSY | |
| 4 | 0770033-96 | CABLE ASSY | |
| 3 | S-1360-15 | CIRCUIT BREAKER | |
| 2 | 0713743-1 | BUS BAR | |
| 1 | KX-150A | DIRECTOR (KG) | |

EQUIPMENT TABLE

CESSNA AIRCRAFT CO., COMMERCIAL AIRCRAFT DIVISION, WICHITA, KANSAS

| | NAME | DATE |
|---|---|---|
| DRAWN | G WOOD | 10-29-63 |
| GROUP | | 12-13-63 |
| CHECK | R Stuck | 12-11-63 |
| PROJ | M. McCarter | 12-13-63 |

TITLE: WIRING DIAGRAM — KING KX-150A (OPT)

Cessna.

DWG NO. 0770610

SUPERSEDED BY

SUPERSEDES 0770610 PAGE 17.8.1

MODEL 182

REV A

PAGE: 17.8.2

FORM NO. 80-161

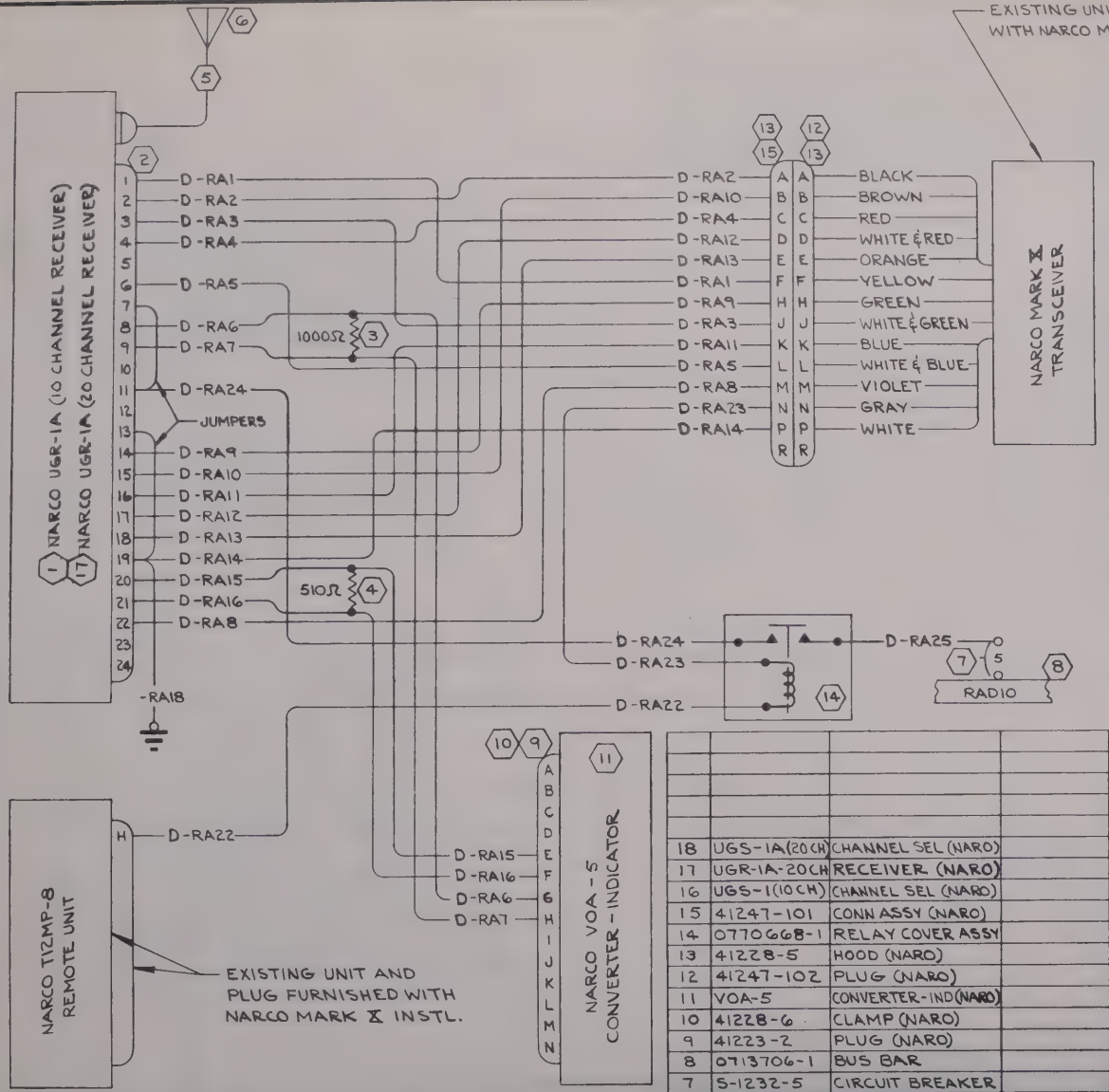


UGR-1A GLIDE SLOPE WITH NARCO MARK X & VOA-5

| ITEM | PART NO. | DESCRIPTION | INSTALLED ON |
|---|---|---|---|
| 18 | UGS-1A(20CH) | CHANNEL SEL (NARO) | |
| 17 | UGR-1A-20CH | RECEIVER (NARO) | |
| 16 | UGS-1(10CH) | CHANNEL SEL (NARO) | |
| 15 | 41247-101 | CONN ASSY (NARO) | |
| 14 | 0770668-1 | RELAY COVER ASSY | |
| 13 | 41228-5 | HOOD (NARO) | |
| 12 | 41247-102 | PLUG (NARO) | |
| 11 | VOA-5 | CONVERTER-IND (NARO) | |
| 10 | 41228-6 | CLAMP (NARO) | |
| 9 | 41223-2 | PLUG (NARO) | |
| 8 | 0713706-1 | BUS BAR | |
| 7 | S-1232-5 | CIRCUIT BREAKER | |
| 6 | 0770625-11 | ANTENNA INSTL | |
| 5 | 0770033-66 | RF CABLE | |
| 4 | 510Ω ± 5% ½ WATT | RES (OM) "LITTLE DEVIL" | |
| 3 | 1000Ω ± 10% ½ WATT | RES (OM) "LITTLE DEVIL" | |
| 2 | 41246-1 | CONN ASSY (NARO) | |
| 1 | UGR-1A-10CH | RECEIVER (NARO) | |

| CHG LET | REVISION | BY / DATE | CHK / APPD |
|---|---|---|---|
| | | | |

Inactive
SER 18255059 & ON
6-4-63
Gw HFW. RRS
ALA BE Nmc

| WIRE CODE NO. | GA | MATERIAL | LG | TERMINALS | | N/A | SERIALS |
|---|---|---|---|---|---|---|---|
| D-RA26 | 22 | | | SOLDER | SOLDER | 0770679 | |
| D-RA25 | 18 | | | | S-1367-1-8 | | |
| D-RA24 | 18 | | | | SOLDER | | |
| D-RA23 | 18 | | | | SOLDER | | |
| D-RA22 | 18 | | | SOLDER | SOLDER | 0770679 | |
| D-RA18 | 18 | | | SOLDER | S-1367-1-8 | 0770679 | |
| D-RA17 | 18 | | | | S-1367-1-8 | | |
| D-RA16 | 22 | | | | SOLDER | | |
| D-RA15 | 22 | | | | | | |
| D-RA14 | 22 | | | | | | |
| D-RA13 | 22 | | | | | | |
| D-RA12 | 22 | | | | | | |
| D-RA11 | 22 | | | | | | |
| D-RA10 | 22 | | | | | | |
| D-RA9 | 22 | | | | | | |
| D-RA8 | 18 | | | | | | |
| D-RA7 | 22 | | | | | | |
| D-RA6 | 22 | | | | | | |
| D-RA5 | 22 | | | | | | |
| D-RA4 | 22 | | | | | | |
| D-RA3 | 22 | | | | | | |
| D-RA2 | 22 | | | | | | |
| D-RA1 | 22 | | | SOLDER | SOLDER | 0770679 | |

WIRE TABLE

CESSNA AIRCRAFT CO COMMERCIAL AIRCRAFT DIVISION WICHITA KANSAS

| | NAME | DATE |
|---|---|---|
| DRAWN | RIDDER | 8-27-62 |
| GROUP | C.V. Martin | 9-24-62 |
| CHECK | R. Struck | 9-24-62 |
| PROJ | H. McCarter | 9-24-62 |

TITLE
WIRING DIAGRAM — NARCO UGR-1A GLIDE SLOPE WITH NARCO MARK V OR MARK X & VOA-5 (OPT)

Cessna.

DWG NO. 0770610

SUPERSEDED BY | SUPERSEDES | MODEL: | REV: | PAGE:

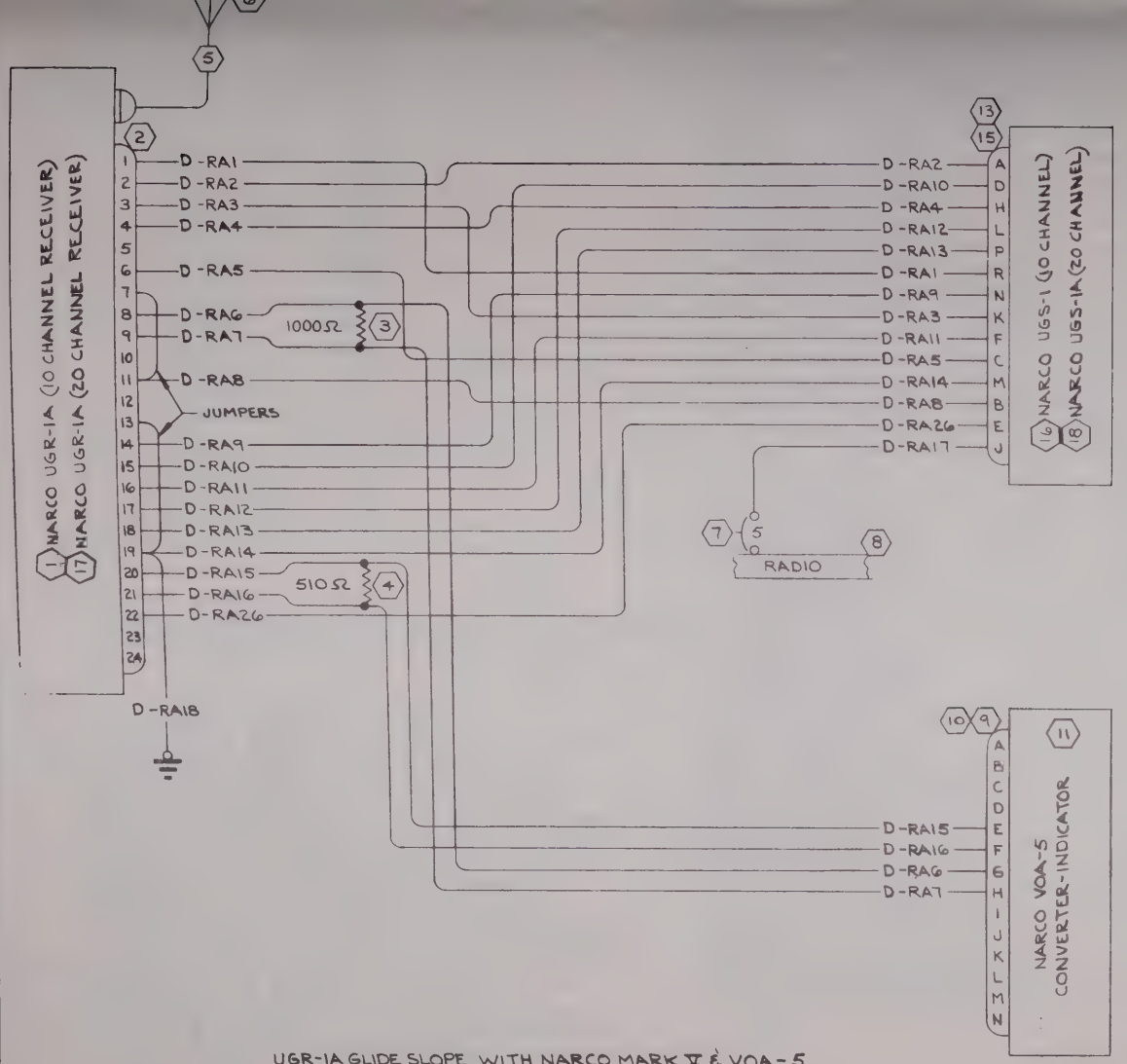


UGR-1A GLIDE SLOPE WITH NARCO MARK V & VOA-5

Inactive
SER 1/8255059 & ON
6-4-63
Gw H&W RRS
ALA GE NMC

| WIRE CODE NO. | GA | MATERIAL | LG | TERMINALS | | SERIALS |
|---|---|---|---|---|---|---|

WIRE TABLE

CESSNA AIRCRAFT CO COMMERCIAL AIRCRAFT DIVISION WICHITA KANSAS

| | NAME | DATE |
|---|---|---|
| DRAWN | RIDDER | 8-27-62 |
| GROUP | C.V. Martin | 9-24-62 |
| CHECK | R. Stuck | 9-24-62 |
| PROJ | H. McCuter | 9-24-62 |

TITLE
WIRING DIAGRAM — NARCO UGR-1A GLIDE SLOPE WITH NARCO MARK V OR MARK X & VOA-5 (OPT)

Cessna.

DWG NO: 0770610

| SUPERSEDED BY | SUPERSEDES | MODEL: | REV: | PAGE: |
|---|---|---|---|---|
| 0770610 PAGE 17.21 | | 182 | | 17.9.1 |

| ITEM NO | PART NO. | DESCRIPTION | INSTALLED ON |
|---|---|---|---|

EQUIPMENT TABLE

FORM NO. 80-161

(SR 3899)

| CHG LET | REVISION | BY / DATE | CHK / APPD |
|---|---|---|---|
| | | | |

NOTES:

1. REEL ASSY MAY BE EITHER NO. 31-420, GARWIN INC, WICHITA OR SP-10010, STANDARD PRODUCTS INC, WICHITA. NO. 31-402A GARWIN INC IS ALTERNATE.
2. REFER TO 1270625 PAGE 17.9
3. SERIES CAPACITANCE IS REQD ON FREQUENCIES 9.0 MC & ABOVE WHEN A 27 TO 28 FOOT ANT. IS USED. ADD JUMPER WIRE BETWEEN WAFERS FOR LOWER FREQ.
4. 0814308-5 ANTENNA WIRE (120 FEET) REPLACES 0814308-2 (100 FEET) WHEN ANY XMTR-RCVR FREQUENCY TO BE USED IS BELOW 2400 KC.
5. USE ELMENCO TYPE VCM-20, 2500 WVDC, ±5% CAPACITORS FOR SERIES CAPACITANCE BETWEEN WAFERS WHEN REQD (SEE NOTE 3). PARALLEL CONNECT (2) 10 MMFD CAPACITORS FOR FREQ 9.0 MC & HIGHER THEN ADJUST TAP ON LOAD COIL FOR RESONANCE.
6. D-RH69, D-RH60, D-RH74, D-RH75, D-RH62 & D-RH76 WIRES TO BE CODED "PH-JK", "MIKE AUD", "MIKE KEY" "MIKE GND", "SPKR" & "LT DIM" RESPECTIVELY. NUMERICAL CODING SHOWN IS OPTIONAL.
7. WIRES THAT CONNECT TO REEL MOTOR ARE SOLDERED TO PLUG AFTER INSTL IN AIRPLANE.

| ITEM | PART NO. | DESCRIPTION | INSTALLED ON |
|---|---|---|---|
| 46 | 17005 | CONNECTOR | |
| 45 | 17004 | CONNECTOR | |
| 44 | 30D192A1 | CAPACITOR | |
| 43 | 1270636-1 | CABLE ASSY | |
| 42 | HIF | FUSEHOLDER (BUS) | |
| 41 | AGA2 | FUSE (BUS) | |
| 40 | 0770033-105 | CABLE ASSY | |
| 4 | 39 | 0814308-2 | ANTENNA WIRE | |
| 38 | 0770033-104 | CABLE ASSY | |
| 5 | 37 | TYPE VCM-20 | CAPACITOR | |
| 36 | 0770033-103 | CABLE ASSY | |
| 35 | 0770033-102 | CABLE ASSY | |
| 34 | 0770033-70 | CABLE | |
| 33 | 0770610-RP1 | WIRE | |
| 32 | 0770610-RP7 | WIRE | |
| 31 | 0770610-RP6 | WIRE | |
| 30 | 0770610-RP5 | WIRE | |
| 29 | 0770610-RP4 | WIRE | |
| 2 | 28 | 1270625-RH9 | WIRE | |
| 27 | 1270625-RH7 | WIRE | |
| 26 | 1270625-RH6 | WIRE | |
| 25 | 1270625-RH4 | WIRE | |
| 24 | 1270625-RH3 | WIRE | |
| 23 | 1270625-RH8 | WIRE | |
| 22 | 1270625-RH1 | WIRE | |
| 21 | 1270625-RH2 | WIRE | |
| 20 | BLUE | WIRE | |
| 2 | 19 | 1270625-RH5 | WIRE | |
| 18 | 0770610-LG2 | WIRE | |
| 17 | 0770610-LB1 | WIRE | |
| 16 | 0770610-LG1 | WIRE | |
| 15 | 0713706-1 | BUS BAR | |
| 14 | S-1232-15 | CIRCUIT BREAKER | |
| 13 | S-1232-10 | CIRCUIT BREAKER | |
| 12 | 0770033-118 | CABLE ASSY | |
| 11 | 1270420-10 | ANTENNA | |
| 10 | 0911062-9 | SPEAKER | |
| 9 | S-1102-1 | MIKE JACK | |
| 8 | S-1103-1 | PHONE JACK | |
| 7 | 0812509-24 | COIL ASSY | |
| 6 | 1 | REEL ASSY | |
| 5 | 0770630-3 | CONTROL PANEL | |
| 4 | 39001 | ANT. CURRENT SENSE UNIT | (PNTR) |
| 3 | 39002 | ANT. SW ASSY | (PNTR) |
| 2 | DX10-PS | POWER SUPPLY | (PNTR) |
| 1 | DX10-D | PAN. TRANSCEIVER | (PNTR) |

Inactive SER 18255059 & ON 7-17-63 W & BW NMC

| WIRE CODE NO. | GA | MATERIAL | LG | TERMINALS | | N/A | SERIALS |
|---|---|---|---|---|---|---|---|
| D-RH81 | 20 | | | S-1370-0 | S-1370-0 | 0770680 | |
| D-RH80 | 20 | | | S-1370-0 | S-1370-0 | | |
| D-RH79 | 14 | | | SOLDER | S-1367-2-8 | | |
| D-RH78 | 14 | | | SOLDER | S-1367-2-8 | 0770680 | |
| | | | | | | | |
| D-RH76 | 20 | | | SOLDER | S-1370-0 | 0770680 | |
| D-RH75 | 20 | | | SOLDER | S-1370-0 | 0770680 | |
| D-RH74 | 20 | | | SOLDER | S-1370-0 | 0770680 | |
| D-RH73 | 20 | | | SOLDER | CONN TO D-RH54 | 0770618 | |
| D-RH72 | 20 | | | SOLDER | CONN TO D-RH57 | 0770618 | |
| D-RH71 | 20 | | | SOLDER | CONN TO D-RH55 | | |
| D-RH70 | 20 | | | SOLDER | CONN TO D-RH53 | | |
| D-RH69 | 20 | | | SOLDER | CONN TO D-RH52 | | |
| D-RH68 | 20 | | | SOLDER | CONN TO D-RH51 | 0770618 | |
| D-RH67 | 18 | | | SOLDER | SOLDER | 0770680 | |
| D-RH66 | 18 | | | SOLDER | S-1367-1-8 | | |
| D-RH65 | 20 | | | SOLDER | SOLDER | | |
| D-RH64 | 20 | | | SOLDER | S-1370-0 | | |
| D-RH63 | 20 | | | SOLDER | SOLDER | | |
| D-RH62 | 20 | | | SOLDER | S-1370-0 | | |
| D-RH61 | 20 | | | SOLDER | SOLDER | | |
| D-RH60 | 20 | | | SOLDER | S-1370-0 | | |
| D-RH59 | 20 | | | SOLDER | SOLDER | | |
| D-RH58 | 20 | | | SOLDER | SOLDER | | |
| D-RH57 | 20 | | | SOLDER | S-1370-0 | | |
| D-RH56 | 20 | | | SOLDER | SOLDER | | |
| D-RH55 | 20 | | | SOLDER | S-1370-0 | | |
| D-RH54 | 20 | | | SOLDER | S-1370-0 | | |
| D-RH53 | 20 | | | SOLDER | S-1370-0 | | |
| D-RH52 | 20 | | | SOLDER | S-1370-0 | | |
| D-RH51 | 20 | | | SOLDER | S-1370-0 | 0770680 | |

WIRE TABLE

CESSNA AIRCRAFT CO COMMERCIAL AIRCRAFT DIVISION WICHITA KANSAS

| | NAME | DATE |
|---|---|---|
| DRAWN | G WOOD | 9-19-62 |
| GROUP | | 11-7-62 |
| CHECK | R. Stuck | 11-6-62 |
| PROJ | W McCarter | 11-7-62 |

TITLE: WIRING DIAGRAM — PANTRONICS DX10-D HF TRANSCEIVER INSTALLATION (OPT)

Cessna.

DWG NO. 0770610

REV: | PAGE:

SUPERSEDED BY | SUPERSEDES | MODEL:

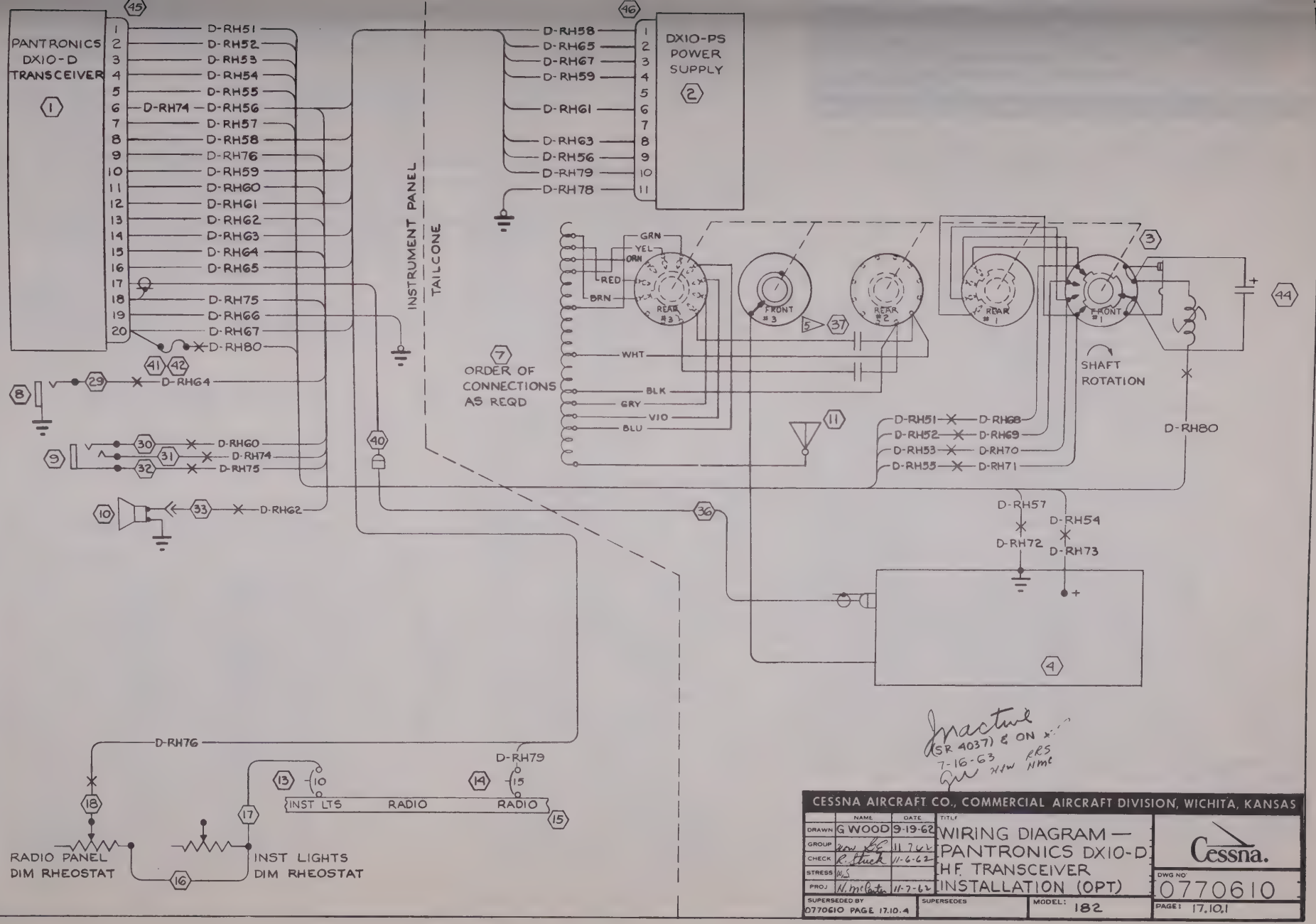
PANTRONICS DX10-D TRANSCEIVER
DX10-PS POWER SUPPLY
INSTRUMENT PANEL
TAILCONE
ORDER OF CONNECTIONS AS REQD
SHAFT ROTATION
REAR #3
FRONT #3
REAR #2
REAR #1
FRONT #1
GRN
YEL
ORN
RED
BRN
WHT
BLK
GRY
VIO
BLU
D-RH51
D-RH52
D-RH53
D-RH54
D-RH55
D-RH56
D-RH57
D-RH58
D-RH59
D-RH60
D-RH61
D-RH62
D-RH63
D-RH64
D-RH65
D-RH66
D-RH67
D-RH68
D-RH69
D-RH70
D-RH71
D-RH72
D-RH73
D-RH74
D-RH75
D-RH76
D-RH78
D-RH79
D-RH80
INST LTS
RADIO
RADIO
RADIO PANEL DIM RHEOSTAT
INST LIGHTS DIM RHEOSTAT
Inactive (SR 4037) & ON
7-16-63
CESSNA AIRCRAFT CO., COMMERCIAL AIRCRAFT DIVISION, WICHITA, KANSAS
DRAWN G WOOD 9-19-62
GROUP 11-7-62
CHECK R. Stuck 11-6-62
STRESS
PROJ 11-7-62
TITLE WIRING DIAGRAM — PANTRONICS DX10-D HF TRANSCEIVER INSTALLATION (OPT)
Cessna.
DWG NO 0770610
SUPERSEDED BY 0770610 PAGE 17.10.4
SUPERSEDES
MODEL: 182
PAGE: 17.10.1

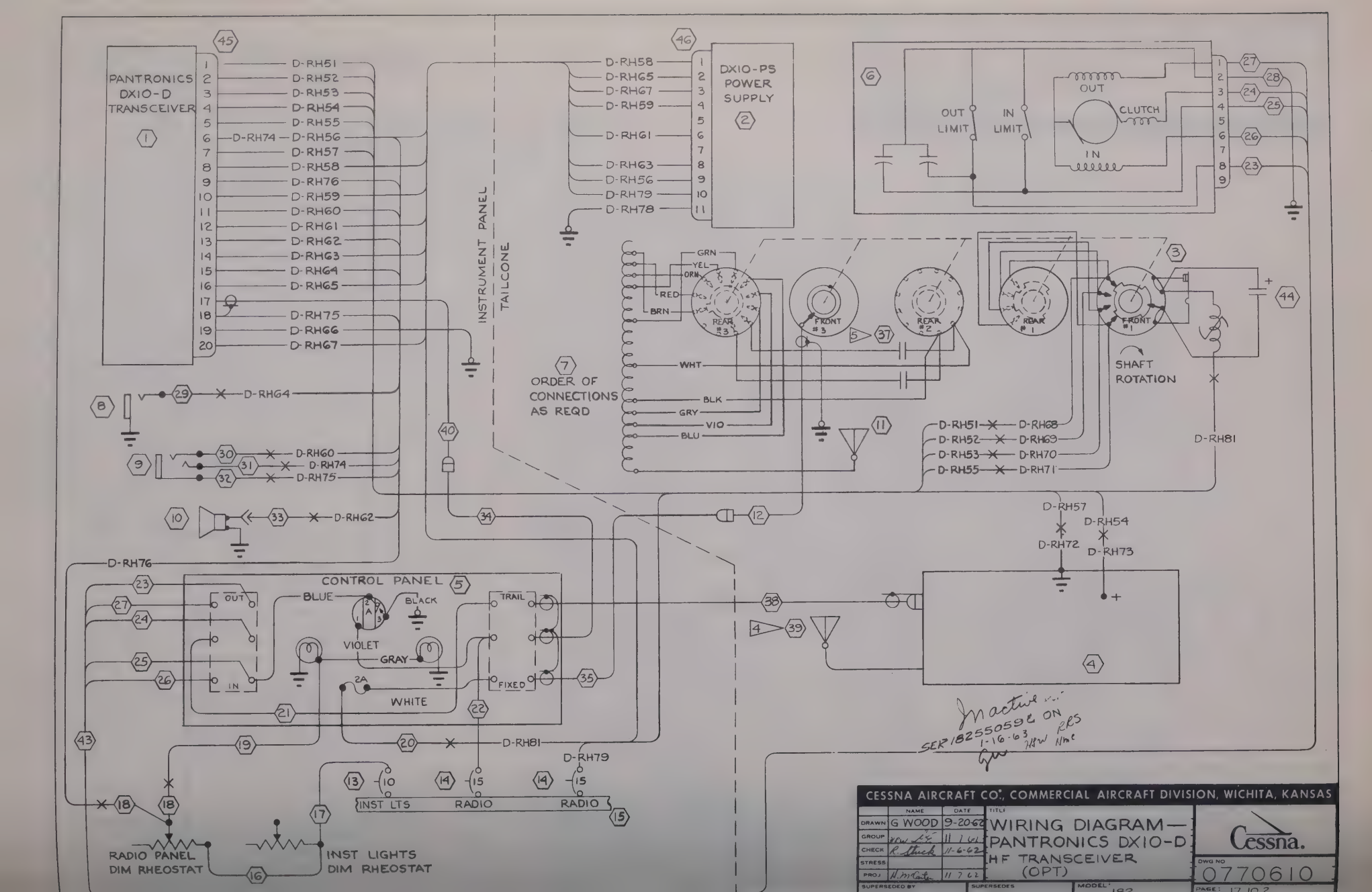


CESSNA AIRCRAFT CO., COMMERCIAL AIRCRAFT DIVISION, WICHITA, KANSAS

| | NAME | DATE |
|---|---|---|
| DRAWN | G WOOD | 9-20-62 |
| GROUP | | 11 7 62 |
| CHECK | R. Buck | 11-6-62 |
| STRESS | | |
| PROJ | | 11 7 62 |

SUPERSEDED BY

SUPERSEDES

MODEL

TITLE: WIRING DIAGRAM— PANTRONICS DX10-D HF TRANSCEIVER (OPT)

Cessna.

DWG NO 0770610

PAGE 17-10-2

NOTES:

1. REEL ASSY MAY BE EITHER NO. 31-420, GARWIN INC, WICHITA OR SP-10010, STANDARD PRODUCTS INC, WICHITA. NO. 31-402A GARWIN INC IS ALTERNATE.
2. REFER TO 1270625 PAGE 17.9, 0770610 PAGE 17.1 & 11.2
3. SERIES CAPACITANCE IS REQD ON FREQUENCIES 8.0 MC & ABOVE WHEN A 27 TO 28 FOOT ANT. IS USED. ADD JUMPER WIRE BETWEEN WAFERS FOR LOWER FREQUENCIES.
4. 0814308-5 ANTENNA WIRE (120 FEET) REPLACES 0814308-2 (100 FEET) WHEN ANY XMTR-RCVR FREQUENCY TO BE USED IS BELOW 2400 KC.
5. USE ELMENCO TYPE VCM-20, 2500 WVDC, ±5% CAPACITORS FOR SERIES CAPACITANCE BETWEEN WAFERS WHEN REQD (SEE NOTE 3). PARALLEL CONNECT (2) 10 MMFD CAPACITORS FOR FREQ 8.0 MC & HIGHER THEN ADJUST TAP ON LOAD COIL FOR RESONANCE.
6. WIRES THAT CONNECT TO REEL MOTOR ARE SOLDERED TO PLUG AFTER INSTL IN AIRPLANE BECAUSE OF STA 124.0 BHD HOLE SIZE LIMITATION.

## EQUIPMENT TABLE

| ITEM NO | PART NO. | DESCRIPTION | INSTALLED ON |
|---|---|---|---|
| 46 | 17005 | CONNECTOR | (PNTR) |
| 45 | 17004 | CONNECTOR | (PNTR) |
| 44 | 30D192A1 | CAPACITOR (SPR) | |
| 43 | 1270636-1 | CABLE ASSY | |
| 42 | HIF | FUSEHOLDER (BUS) | |
| 41 | AGA2 | FUSE (BUS) | |
| 40 | 0770033-105 | CABLE ASSY | |
| 4 39 | 0814308-2 | ANTENNA WIRE | |
| 38 | 0770033-55 | CABLE ASSY | |
| 5 37 | TYPE VCM-20 | CAPACITOR | |
| 36 | 0770033-103 | CABLE ASSY | |
| 35 | 0770033-102 | CABLE ASSY | |
| 34 | 0770033-70 | CABLE ASSY | |
| 2 33 | GREEN | WIRE | |
| 32 | BLACK | WIRE | |
| 31 | WHT/BLK | WIRE | |
| 30 | TAN | WIRE | |
| 29 | BLUE | WIRE | |
| 28 | 1270625-RH9 | WIRE | |
| 27 | 1270625-RH7 | WIRE | |
| 26 | 1270625-RH6 | WIRE | |
| 25 | 1270625-RH4 | WIRE | |
| 24 | 1270625-RH3 | WIRE | |
| 23 | 1270625-RH8 | WIRE | |
| 22 | 1270625-RH1 | WIRE | |
| 21 | 1270625-RH2 | WIRE | |
| 20 | BLUE | WIRE (BDN) | |
| 19 | 1270625-RH5 | WIRE | |
| 18 | YELLOW | WIRE | |
| 17 | 0770610-LB1 | WIRE | |
| 2 16 | YELLOW | WIRE | |
| 15 | 0713743-1 | BUS BAR | |
| 14 | S-1360-15 | CIRCUIT BREAKER | |
| 13 | S-1360-10 | CIRCUIT BREAKER | |
| 12 | 0770033-118 | CABLE ASSY | |
| 11 | 1270420-10 | ANTENNA | |
| 10 | 0911062-9 | SPEAKER | |
| 9 | S-1102-1 | MIKE JACK | |
| 8 | S-1103-1 | PHONE JACK | |
| 7 | 0812509-24 | COIL ASSY | |
| 6 | 1 | REEL ASSY | |
| 5 | 0770630-3 | CONTROL PANEL | |
| 4 | 39001 | ANT. CURRENT SENSE UNIT | (PNTR) |
| 3 | 39002 | ANTENNA SW ASSY | (PNTR) |
| 2 | DX10-PS | POWER SUPPLY | (PNTR) |
| 1 | DX10-D | PAN. TRANSCEIVER | (PNTR) |

## WIRE TABLE

| WIRE CODE NO. | GA | MATERIAL | LG | TERMINALS | | N/A | SERIALS |
|---|---|---|---|---|---|---|---|
| BLU/WHT | 22 | S-1460-22-6-9 | | S-1370-0 | S-1370-0 | 0770680 | |
| BLU/TAN | 22 | S-1460-22-6-10 | | S-1370-0 | S-1370-0 | | |
| WHITE | 14 | | | SOLDER | S-1367-2-6 | | |
| WHITE | 14 | | | SOLDER | S-1367-2-8 | | |
| YELLOW | 18 | S-1460-18-4 | | SOLDER | S-1370-1 | | |
| BLACK | 22 | S-1460-22-0 | | SOLDER | S-1370-0 | | |
| WHT/BLK | 22 | S-1460-22-9-0 | | SOLDER | S-1370-0 | 0770680 | |
| YEL/RED | 20 | S-1460-20-4-2 | | SOLDER | MATES WITH YEL/RED WIRE | 0770618 | |
| YEL/TAN | 20 | S-1460-20-4-10 | | SOLDER | MATES WITH YEL/TAN WIRE | | |
| GRN/WHT | 20 | S-1460-20-5-9 | | SOLDER | MATES WITH GRN/WHT WIRE | | |
| GRN/BLU | 20 | S-1460-20-5-6 | | SOLDER | MATES WITH GRN/BLU WIRE | | |
| GRN/YEL | 20 | S-1460-20-5-4 | | SOLDER | MATES WITH GRN/YEL WIRE | | |
| GRN/RED | 20 | S-1460-20-5-2 | | SOLDER | MATES WITH GRN/RED WIRE | 0770618 | |
| YEL/BLK | 18 | S-1460-18-4-0 | | SOLDER | SOLDER | 0770680 | |
| BLK/WHT | 18 | S-1460-18-0-9 | | SOLDER | S-1367-1-8 | | |
| YEL/TAN | 20 | S-1460-20-4-10 | | SOLDER | SOLDER | | |
| BLUE | 22 | S-1460-22-6 | | SOLDER | S-1370-0 | | |
| GRN/WHT | 20 | S-1460-20-5-9 | | SOLDER | SOLDER | | |
| GREEN | 20 | S-1460-20-5 | | SOLDER | S-1370-0 | | |
| GRN/BLU | 20 | S-1460-20-5-6 | | SOLDER | SOLDER | | |
| TAN | 22 | S-1460-22-10 | | SOLDER | S-1370-0 | | |
| GRN/YEL | 20 | S-1460-20-5-4 | | SOLDER | SOLDER | | |
| GRN/RED | 20 | S-1460-20-5-2 | | SOLDER | SOLDER | | |
| YEL/RED | 20 | S-1460-20-4-2 | | SOLDER | S-1370-0 | | |
| YEL/GRN | 20 | S-1460-20-4-5 | | SOLDER | SOLDER | | |
| YEL/TAN | 20 | S-1460-20-4-10 | | SOLDER | S-1370-0 | | |
| GRN/WHT | 20 | S-1460-20-5-9 | | SOLDER | S-1370-0 | | |
| GRN/BLU | 20 | S-1460-20-5-6 | | SOLDER | S-1370-0 | | |
| GRN/YEL | 20 | S-1460-20-5-4 | | SOLDER | S-1370-0 | | |
| GRN/RED | 20 | S-1460-20-5-2 | | SOLDER | S-1370-0 | 0770680 | |

CESSNA AIRCRAFT CO. COMMERCIAL AIRCRAFT DIVISION WICHITA, KANSAS

| | NAME | DATE |
|---|---|---|
| DRAWN | G WOOD | 7-15-63 |
| GROUP | H Woods | |
| CHECK | R. Stuck | 8-8-63 |
| PROJ | H. McCants | 8-13-63 |

TITLE: WIRING DIAGRAM — PANTRONICS DX10-D HF TRANSCEIVER INSTALLATION (OPT)

Cessna.

DWG NO. 0770610

| SUPERSEDED BY | SUPERSEDES | MODEL | REV. | PAGE: |
|---|---|---|---|---|
| | 0770610 PAGE 17.10 | 182 | | 17.10.3 |

FORM NO. 80-161

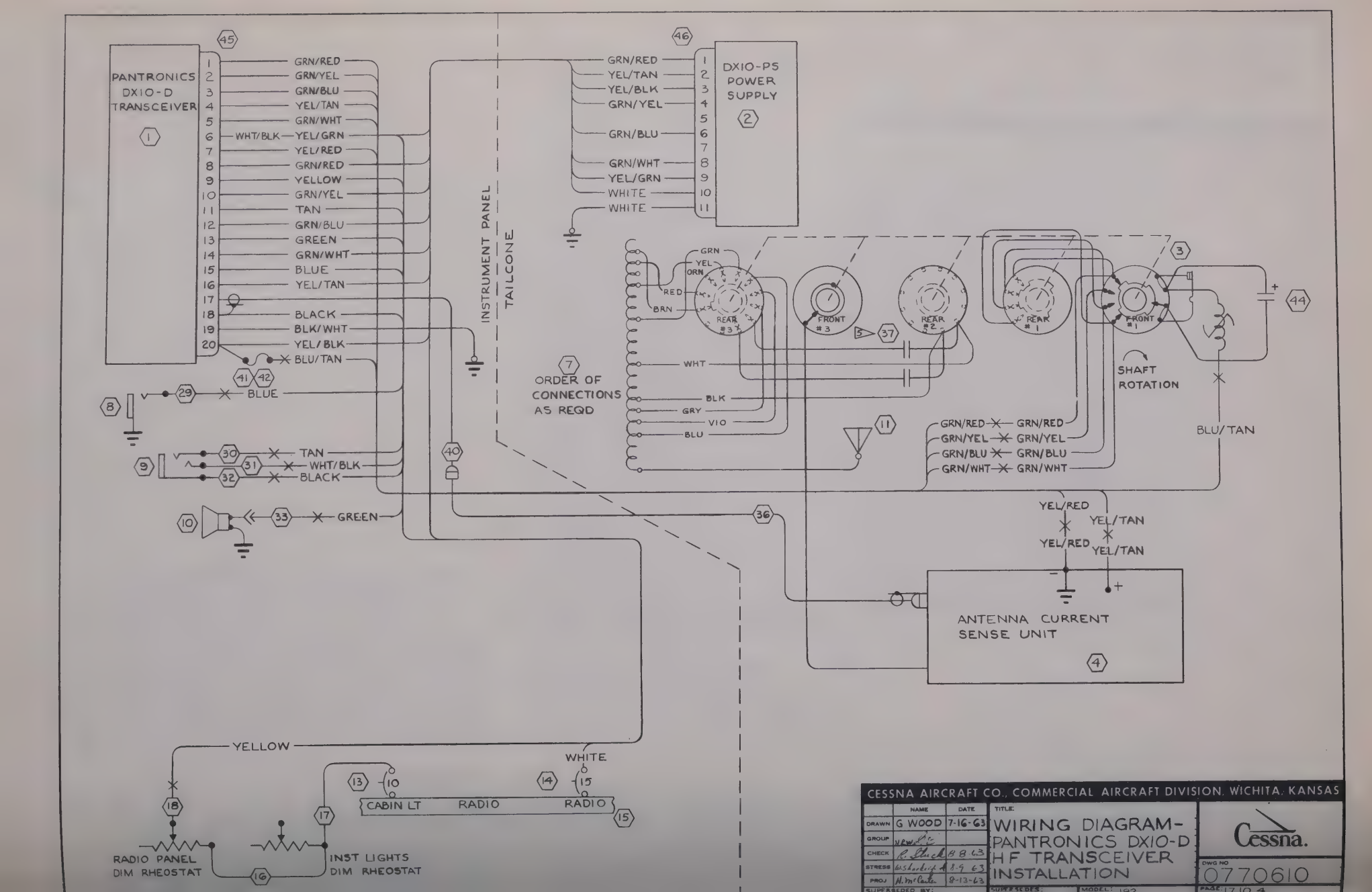
PANTRONICS DX10-D TRANSCEIVER
DX10-PS POWER SUPPLY
INSTRUMENT PANEL
TAILCONE
ORDER OF CONNECTIONS AS REQD
REAR #3
FRONT #3
REAR #2
REAR #1
FRONT #1
SHAFT ROTATION
ANTENNA CURRENT SENSE UNIT
CABIN LT
RADIO
RADIO
RADIO PANEL DIM RHEOSTAT
INST LIGHTS DIM RHEOSTAT
YELLOW
WHITE
GRN/RED
GRN/YEL
GRN/BLU
YEL/TAN
GRN/WHT
WHT/BLK
YEL/GRN
YEL/RED
YELLOW
TAN
GREEN
BLUE
BLACK
BLK/WHT
YEL/BLK
BLU/TAN
WHITE
GRN
YEL
ORN
RED
BRN
WHT
BLK
GRY
VIO
BLU
YEL/RED
YEL/TAN
CESSNA AIRCRAFT CO., COMMERCIAL AIRCRAFT DIVISION, WICHITA, KANSAS
NAME
DATE
DRAWN G WOOD 7-16-63
GROUP
CHECK 8-8-63
STRESS 8-9-63
PROJ 8-13-63
TITLE: WIRING DIAGRAM-PANTRONICS DX10-D HF TRANSCEIVER INSTALLATION
Cessna.
DWG NO 0770610
SUPERSEDED BY:
SUPERSEDES:
MODEL:
PAGE 17 10 4

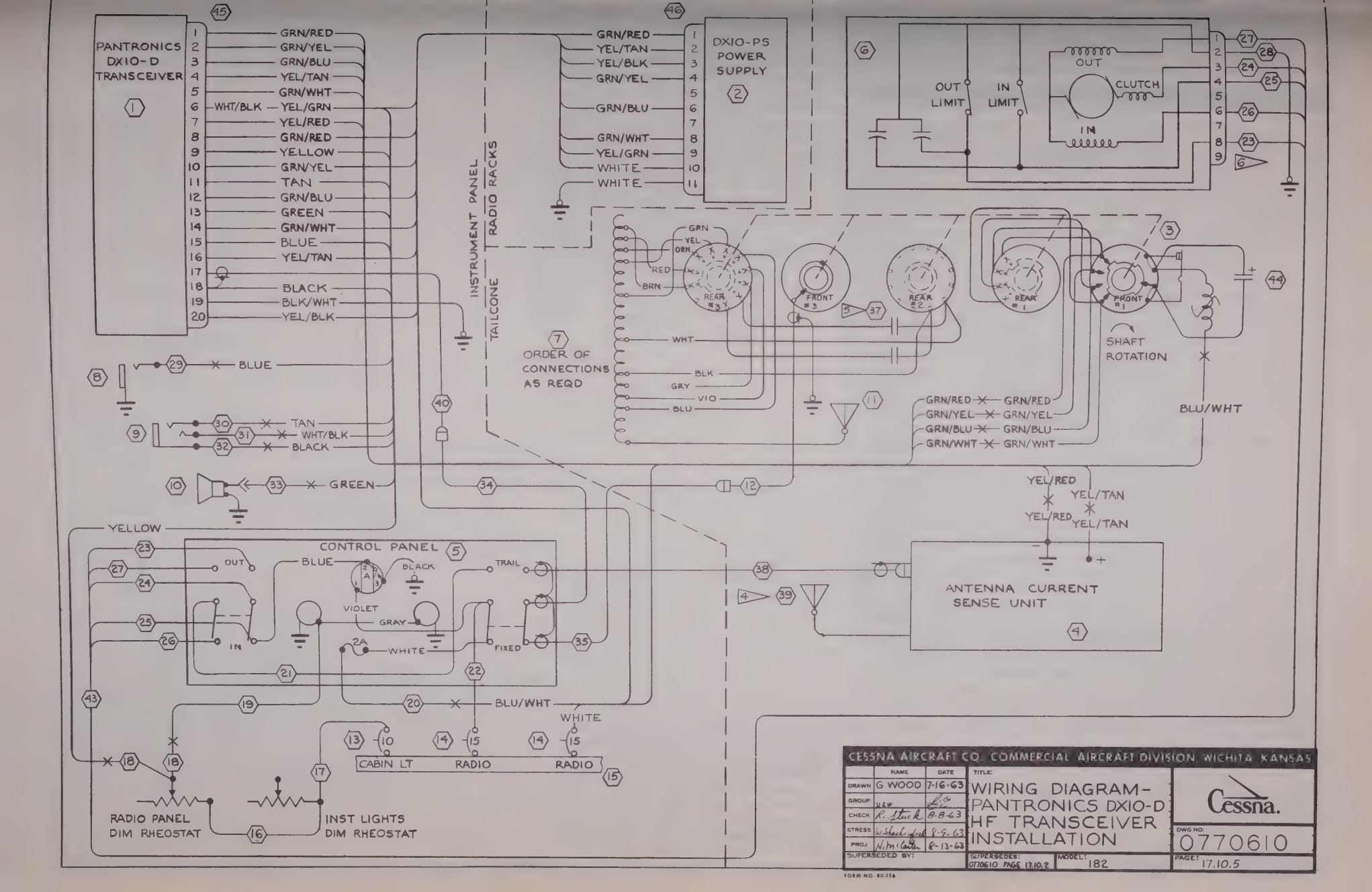


CESSNA AIRCRAFT CO. COMMERCIAL AIRCRAFT DIVISION, WICHITA KANSAS

| | NAME | DATE |
|---|---|---|
| DRAWN | G WOOD | 7-16-63 |
| GROUP | | |
| CHECK | R. Stuck | 8-8-63 |
| STRESS | W. Stuck for | 8-9-63 |
| PROJ | W. McCarty | 8-13-63 |
| SUPERSEDED BY: | | |

TITLE: WIRING DIAGRAM - PANTRONICS DX10-D HF TRANSCEIVER INSTALLATION

Cessna.

DWG NO: 0770610

PAGE: 17.10.5

SUPERSEDES: 0770610 PAGE 17.10.2

MODEL: 182

FORM NO. 80-156

NOTES:

1. WHEN THE OMNI ANTENNA IS CONNECTED TO 2 NAV RECEIVERS, ADD A DAGE NO. 8002-1 TEE CONNECTOR AT "J102" ON THE R-319 SET & CONNECT THE ANTENNA LEAD-IN TO THIS TEE. CONNECT THE 2ND RECEIVER TO THE TEE CONNECTOR WITH A 34.5 INCH LENGTH OF RG-58A/U CABLE.

| CHG LET | REVISION | BY DATE | CHK APPD |
|---|---|---|---|
| | | | |

Inactive SER (18255059) & ON
W.I.R. 6-26-63
RRS GE ALA Mac

| | | | | | | | |
|---|---|---|---|---|---|---|---|
| D-RD434 | 18 | | | SOLDER | SOLDER | 0770684 | |
| D-RD433 | 18 | | | | | | |
| D-RD432 | 22 | | | | | | |
| D-RD431 | 22 | | | | | | |
| D-RD430 | 22 | | | | | | |
| D-RD429 | 22 | | | | | | |
| D-RD428 | 22 | | | | | | |
| D-RD427 | 22 | | | | | | |
| D-RD426 | 22 | | | | | | |
| D-RD425 | 22S | | | | | | |
| D-RD424 | 22S | | | | | | |
| D-RD423 | 22S | | | | | | |
| D-RD422 | 22 | | | | | | |
| D-RD421 | 22 | | | | | | |
| D-RD420 | 22 | | | | | | |
| D-RD419 | 22 | | | SOLDER | SOLDER | | |
| D-RD418 | 22S | | | | SOLDER | | |
| D-RD417 | 18 | | | S-1367-1-8 | SOLDER | | |
| D-RD416 | 18 | | | S-341-1 | SOLDER | | |
| D-RD415 | 16 | | | SOLDER | SOLDER | | |
| D-RD414 | 18 | | | | | | |
| D-RD413 | 22 | | | | | | |
| D-RD412 | 22 | | | | | | |
| D-RD411 | 22 | | | | | | |
| D-RD410 | 22 | | | | | | |
| D-RD409 | 22S | | | | | | |
| D-RD408 | 22 | | | | | | |
| D-RD407 | 16 | | | | | | |
| D-RD406 | 22 | | | | | | |
| D-RD405 | 22 | | | | | | |
| D-RD404 | 22 | | | | | | |
| D-RD403 | 22 | | | | | | |
| D-RD402 | 22S | | | SOLDER | SOLDER | | |
| D-RD401 | 20 | | | S-341-2 | SOLDER | 0770684 | |
| WIRE CODE NO. | GA | MATERIAL | LG | TERMINALS | | N/A | SERIALS |

WIRE TABLE

| | | | |
|---|---|---|---|
| 20 | | | |
| 19 | | | |
| 18 | 0713706-1 | BUS BAR | |
| 17 | S-1232-10 | CIRCUIT BREAKER | |
| 16 | 0770033-86 | RF CABLE ASSY | |
| 15 | 0770033-113 | RF CABLE ASSY | |
| 14 | A-13B | ANTENNA (ARC) | |
| 13 | 0770625-12 | ANTENNA-OMNI | |
| 12 | 0770625-11 | ANTENNA-G.S. | |
| 11 | 0770610-RD100 | WIRE | |
| 10 | 0770033-112 | RF CABLE ASSY | |
| 9 | 0770033-117 | RF CABLE ASSY | |
| 8 | 0770033-114 | RF CABLE ASSY | |
| 7 | 27826 | PLUG (ARC) | |
| 6 | 27825 | PLUG (ARC) | |
| 5 | 28822 | PLUG (ARC) | |
| 4 | DY-319A | DYNAVERTER | |
| 3 | B-317A | CONVERTER (ARC) | |
| 2 | IN-319A-1 | INDICATOR (ARC) | |
| 1 | R-319A | RECEIVER (ARC) | |
| PART NO. | | DESCRIPTION | INSTALLED ON |

CESSNA AIRCRAFT CO. COMMERCIAL AIRCRAFT DIVISION, WICHITA, KANSAS

| | NAME | DATE |
|---|---|---|
| DRAWN | H. WISE | 10-10-62 |
| GROUP | | 10-29-62 |
| CHECK | R. Utech | 10-29-62 |
| PROJ | H McPeak | 10-29-62 |

TITLE: WIRING DIAGRAM — ARC TYPE 319A NAV RECEIVER SYSTEM (OPT)

Cessna.

DWG NO. 0770610

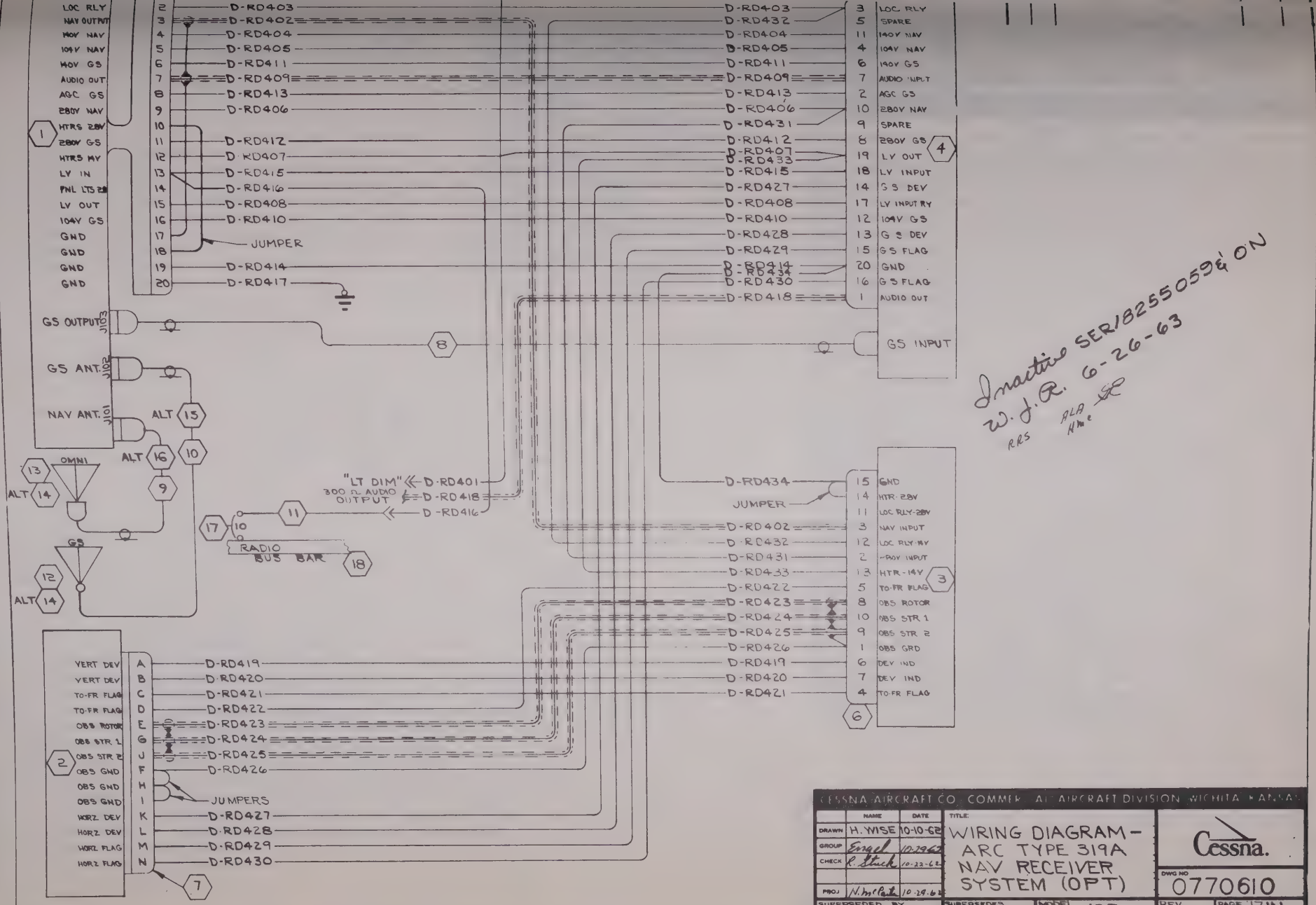


Inactive SER/18255059 & ON
W.J.R. 6-26-63
RRS ALA No.

CESSNA AIRCRAFT CO. COMMERCIAL AIRCRAFT DIVISION WICHITA 1, KANSAS

| | NAME | DATE |
|---|---|---|
| DRAWN | H. WISE | 10-10-62 |
| GROUP | Engel | 10-29-62 |
| CHECK | R. Stuck | 10-22-62 |
| | | |
| PROJ | N. McPeak | 10-29-62 |

SUPERSEDED BY 0770610 PAGE 17.11.3

TITLE: WIRING DIAGRAM - ARC TYPE 319A NAV RECEIVER SYSTEM (OPT)

Cessna.

DWG NO 0770610

SUPERSEDES | MODEL 182 | REV | PAGE 17.11.1

FORM NO 80-156

(SR4037-9)

| CHG LET | REVISION | BY / DATE | CHK / APPD |
|---|---|---|---|
| | | | |

NOTES:

1. WHEN THE OMNI ANTENNA IS CONNECTED TO 2 NAV RECEIVERS, ADD A DAGE NO. 8002-1 TEE CONNECTOR AT "J102" ON THE R-319 SET & CONNECT THE ANTENNA LEAD-IN TO THIS TEE. CONNECT THE 2ND RECEIVER TO THE TEE CONNECTOR WITH A 27.0 INCH LENGTH OF RG-58A/U CABLE.
2. WHERE WIRE CODE LISTS 2 COLORS, 1ST COLOR IS BASE COLOR & 2ND COLOR IS THE STRIP.
3. WIRES FLAGGED THUS CONNECT TO 28900 OMNI COUPLER (NAV-O-MATIC 300 SYSTEM) WHEN INSTALLED.

Inactive SER 18255845 & ON
WJR 7-8-64
RRS EE

| | | | | | | | | |
|---|---|---|---|---|---|---|---|---|
| GRY/RED | 22 | S-1460-22-8-2 | | S-1370-1 | SOLDER | 0770684 | | |
| GRY/GRN | 22 | S-1460-22-8-5 | | S-1370-1 | | | | |
| BLK/WHT | 18 | S-1460-18-0-9 | | SOLDER | | | | |
| RED/BLK | 18 | S-1460-18-2-0 | | | | | | |
| BLU/BLK | 22 | S-1460-22-6-0 | | | | | | |
| TAN/BLU | 22 | S-1460-22-10-6 | | | | | | |
| BLU/RED | 22 | S-1460-22-6-2 | | | | | | |
| TAN/YEL | 22 | S-1460-22-10-4 | | | | | | |
| BLU/TAN | 22 | S-1460-22-6-10 | | | | | | |
| BLU/YEL | 22 | S-1460-22-6-4 | | | | | | |
| BLK/YEL | 22 | S-1460-22-0-4 | | | | | | |
| BLU/BLK | 22S | S-1461-22-6-0 | | | | | | |
| BLU/RED | 22S | S-1461-22-6-2 | | | | | | |
| BLU/WHT | 22S | S-1461-22-6-9 | | | | | | |
| WHT/TAN | 22 | S-1460-22-9-10 | | | | | | |
| BLU/WHT | 22 | S-1460-22-6-9 | | | | | | |
| WHT/RED | 22 | S-1460-22-9-2 | | | | | | |
| GRY/BLU | 22 | S-1460-22-8-6 | | SOLDER | | | | |
| BLUE | 22 | S-1460-22-6 | | | | | | |
| BLK/WHT | 18 | S-1460-18-0-9 | | S-1367-1-8 | | | | |
| RED | 16 | S-1460-16-2 | | S-1370-2 | | | | |
| RED | 16 | S-1460-16-2 | | SOLDER | | | | |
| BLACK | 16 | S-1460-16-0 | | | | | | |
| WHT/BLU | 22 | S-1460-22-9-6 | | | | | | |
| WHT/BLK | 22 | S-1460-22-9-0 | | | | | | |
| WHT/GRN | 22 | S-1460-22-9-5 | | | | | | |
| WHT/YEL | 22 | S-1460-22-9-4 | | | | | | |
| BLU/TAN | 22S | S-1461-22-6-10 | | | | | | |
| RED/GRN | 20 | S-1460-20-2-5 | | | | | | |
| RED/WHT | 18 | S-1460-18-2-9 | | | | | | |
| BLU/GRN | 22 | S-1460-22-6-5 | | | | | | |
| TAN/RED | 22 | S-1460-22-10-2 | | | | | | |
| GRY/YEL | 22 | S-1460-22-8-4 | | | | | | |
| TAN/WHT | 22 | S-1460-22-10-9 | | | | | | |
| BLU/YEL | 22S | S-1461-22-6-4 | | SOLDER | | | | |
| YELLOW | 18 | S-1460-18-4 | | S-1370-1 | SOLDER | 0770684 | | |
| WIRE CODE NO | GA | MATERIAL | LG | TERMINALS | | N/A | | SERIALS |

WIRE TABLE

| | | | |
|---|---|---|---|
| 17 | 0713743-1 | BUS BAR | |
| 16 | S-1360-10 | CIRCUIT BREAKER | |
| 15 | R-12½-75-RS34 | RHEOSTAT (TRTA) | |
| 14 | YELLOW | WIRE | |
| 13 | 0770625-12 | ANTENNA - OMNI | |
| 12 | 0770625-11 | ANTENNA - G.S. | |
| 11 | RED | WIRE | |
| 10 | 0770033-112 | RF CABLE ASSY | |
| 9 | 0770033-117 | RF CABLE ASSY | |
| 8 | 0770033-114 | RF CABLE ASSY | |
| 7 | 27826 | PLUG (ARC) | |
| 6 | 27825 | PLUG (ARC) | |
| 5 | 28822 | PLUG (ARC) | |
| 4 | 31360-0014 | DYNAVERTER (ARC) | |
| 3 | 24660 | CONVERTER (ARC) | |
| 2 | 27510 | INDICATOR (ARC) | |
| 1 | 28310-1000 | RECEIVER (ARC) | |

CESSNA AIRCRAFT CO., COMMERCIAL AIRCRAFT DIVISION, WICHITA, KANSAS

| | NAME | DATE |
|---|---|---|
| DRAWN | RIDDER | 6-26-63 |
| GROUP | | |
| CHECK | | 7-15-63 |
| PROJ | | 7-16-63 |

TITLE: WIRING DIAGRAM — CESSNA NAV/OMNI 500 (OPT)

Cessna.

DWG NO 0770610

319A

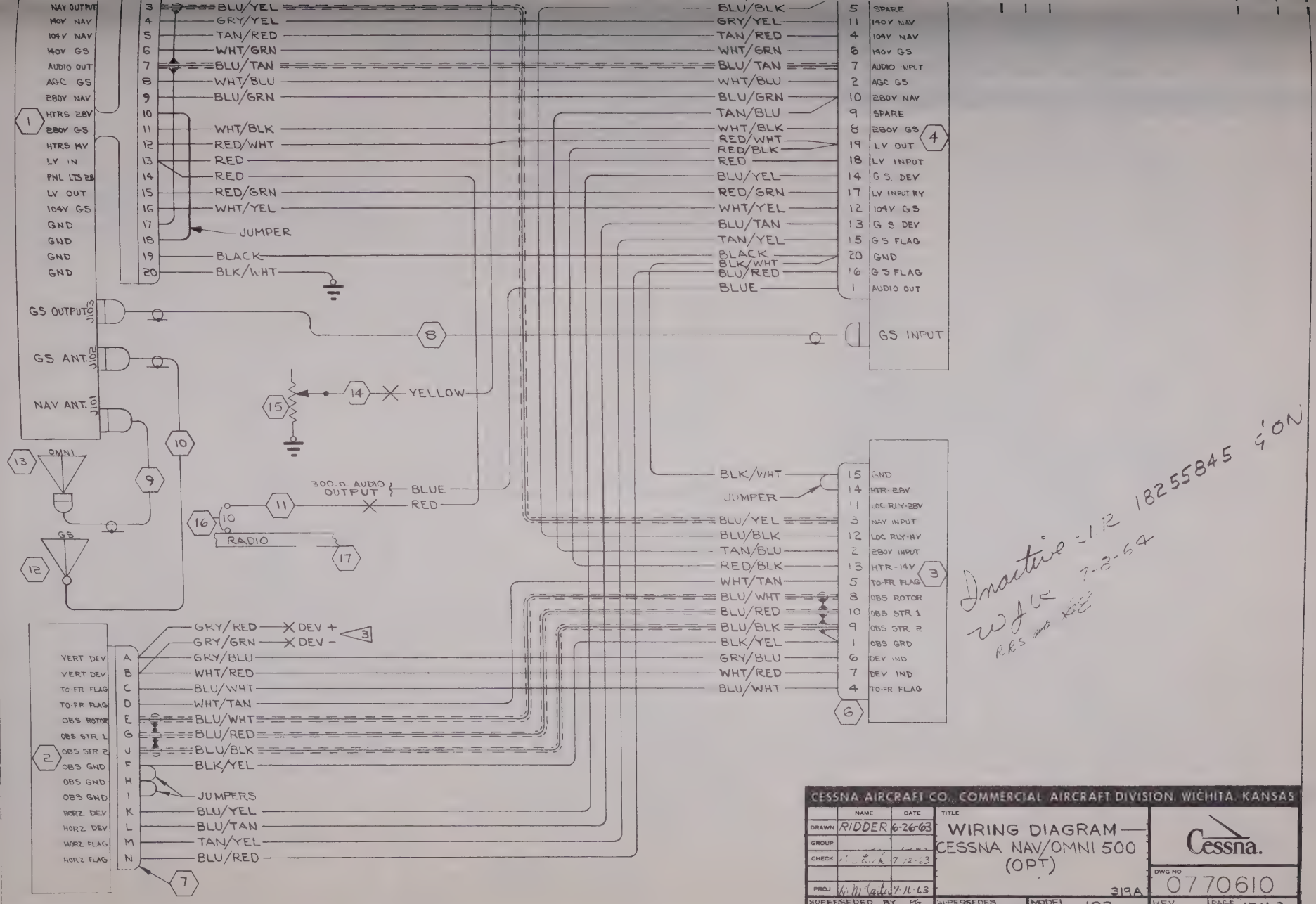


| CESSNA AIRCRAFT CO. COMMERCIAL AIRCRAFT DIVISION, WICHITA, KANSAS | | | | | |
|---|---|---|---|---|---|
| | NAME | DATE | TITLE | | |
| DRAWN | RIDDER | 6-26-63 | WIRING DIAGRAM — CESSNA NAV/OMNI 500 (OPT) | | Cessna. |
| GROUP | | | | | |
| CHECK | | 7-12-63 | | | |
| PROJ | | 7-11-63 | 319A | | DWG NO 0770610 |
| SUPERSEDED BY PG 0770750 2.13.1.1 | | | SUPERSEDES 0770610 PAGE 17.11.1 | MODEL 182 | REV | PAGE 17.11.3 |

FORM NO 80-156

(SR 3936)

| CHG LET | REVISION | BY / DATE | CHK / APPD |
|---|---|---|---|
| | | | |

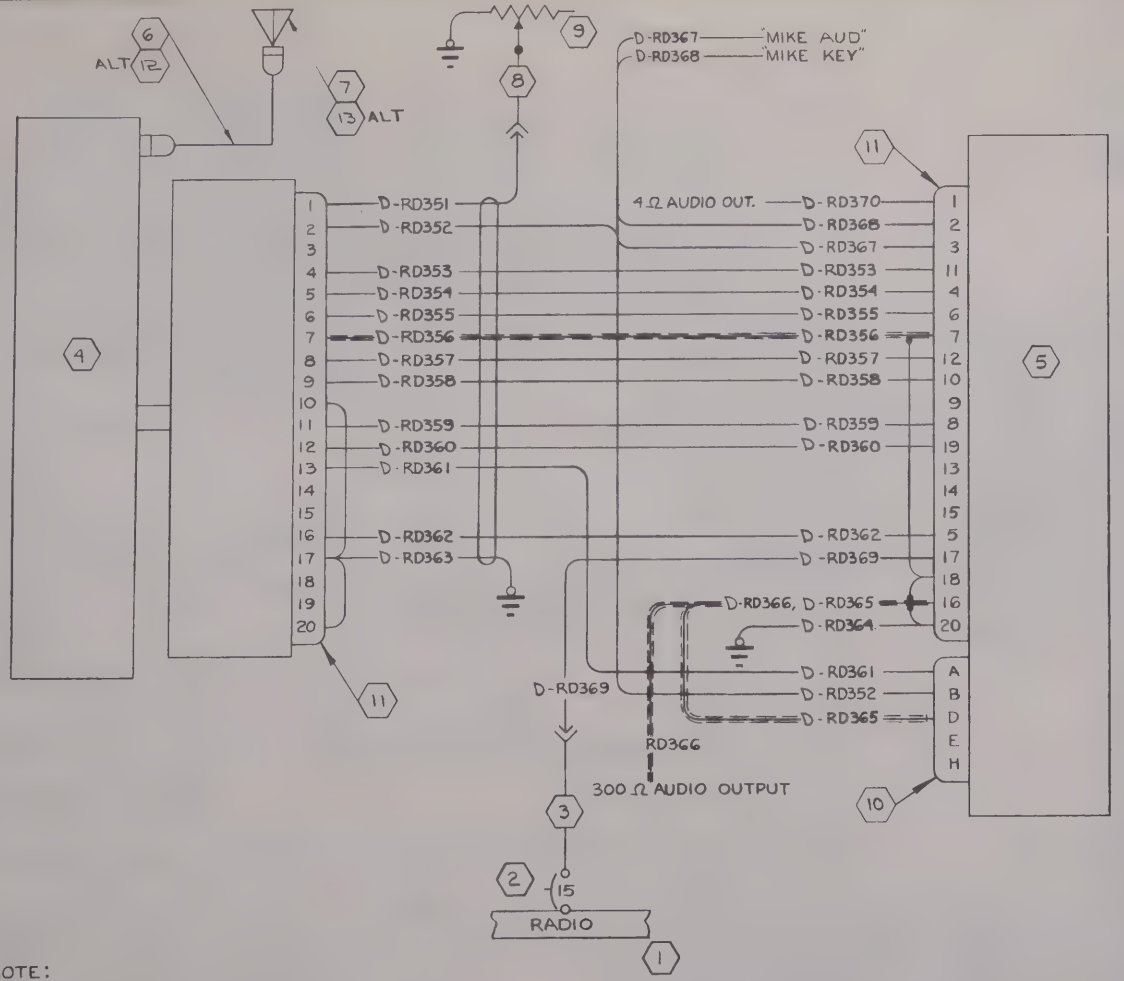


Inactive SER 18255059 & ON 6-25-63 RRS

NOTE:

1. D-RD367 & D-RD368 WIRES TO BE CODED "MIKE AUD" & "MIKE KEY" RESPECTIVELY. NUMERICAL CODING PER CES 1100 IS OPTIONAL ON THESE WIRES.

| | | | |
|---|---|---|---|
| 13 | 0770625-3 | ANTENNA INSTL | |
| 12 | 0770033-56 | R.F CABLE ASSY | |
| 11 | 28808 | PLUG (ARC) | |
| 10 | 28371 | PLUG (ARC) | |
| 9 | R-12½-75-RS34 | RHEOSTAT (TRTA) | |
| 8 | 0770610-LG2 | WIRE | |
| 7 | A-25A | ANTENNA (ARC) | |
| 6 | 0770033-85 | R.F. CABLE ASSY | |
| 5 | DV-302A | DYNAVERTER (ARC) | |
| 4 | RT-302A | TRANSCEIVER (ARC) | |
| 3 | 0770610-RD101 | WIRE | |
| 2 | S-1232-15 | CIRCUIT BREAKER | |
| 1 | 0713706-1 | BUS BAR | |
| | PART NO | DESCRIPTION | INSTALLED ON |

| WIRE CODE NO | GA | MATERIAL | LG | TERMINALS | | N/A | SERIALS |
|---|---|---|---|---|---|---|---|
| D-RD370 | 20 | | | | SOLDER | 0770683 | |
| D-RD369 | 16 | | | S-341-1 | | | |
| D-RD368 | 22 | | | | | | |
| D-RD367 | 22 | | | | | | |
| D-RD366 | 22-S | | | | | | |
| D-RD365 | 22-S | | | SOLDER | | | |
| D-RD364 | 16 | | | S-341-1 | | | |
| D-RD363 | 16 | | | S-341-1 | | | |
| D-RD362 | 22 | | | SOLDER | | | |
| D-RD361 | 22 | | | | | | |
| D-RD360 | 18 | | | | | | |
| D-RD359 | 22 | | | | | | |
| D-RD358 | 22 | | | | | | |
| D-RD357 | 22 | | | | | | |
| D-RD356 | 22-S | | | | | | |
| D-RD355 | 22 | | | | | | |
| D-RD354 | 22 | | | | | | |
| D-RD353 | 22 | | | | | | |
| D-RD352 | 22 | | | SOLDER | | | |
| D-RD351 | 22 | | | S-341-2 | SOLDER | 0770683 | |

WIRE TABLE

CESSNA AIRCRAFT CO. COMMERCIAL AIRCRAFT DIVISION WICHITA KANSAS

| | NAME | DATE |
|---|---|---|
| DRAWN | G. WOOD | 11-6-62 |
| GROUP | [illegible] | 11-27-62 |
| CHECK | R. Fluck | 11-27-62 |
| PROJ | H. McCarter | 11-30-62 |

TITLE: WIRING DIAGRAM — ARC TYPE 302A COMMUNICATION SYSTEM (OPT)

Cessna.

DWG NO. 0770610

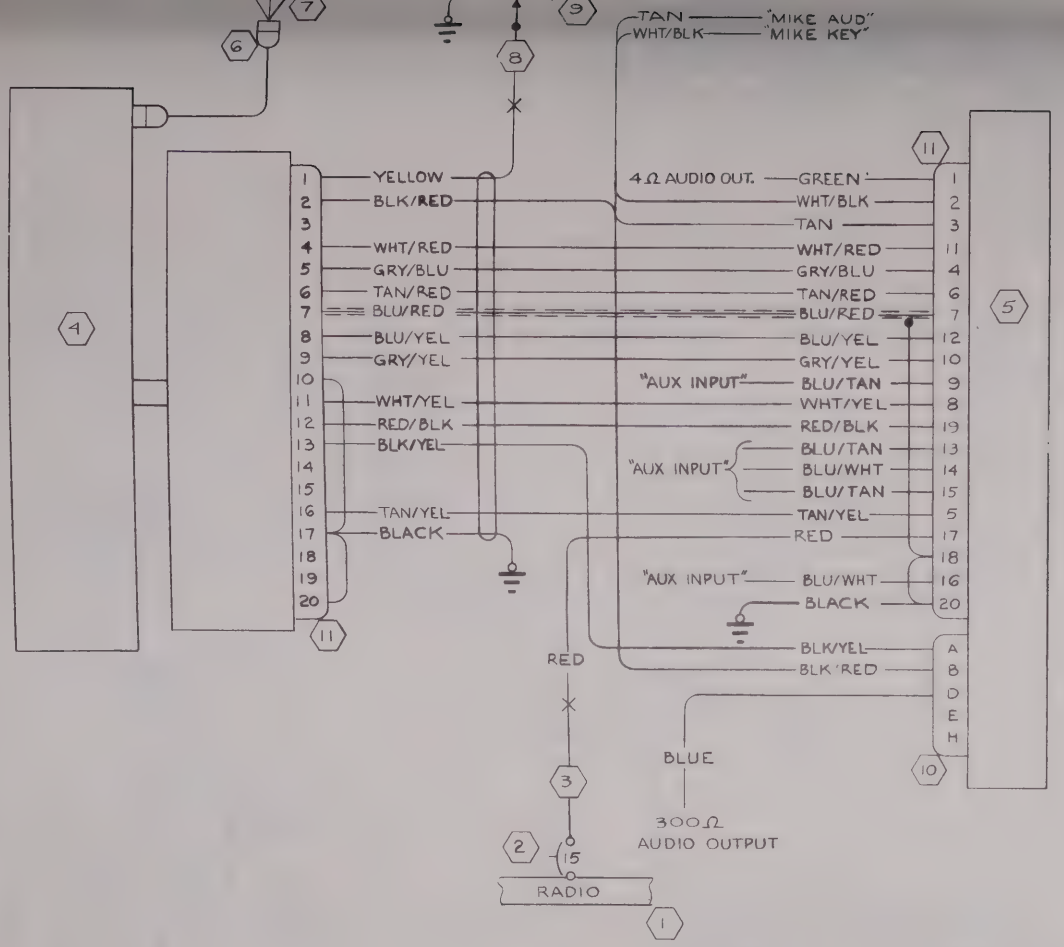


| | | | |
|---|---|---|---|
| | | | |
| 11 | 28808 | PLUG (ARC) | |
| 10 | 28371 | PLUG (ARC) | |
| 9 | R-12½-75-RS34 | RHEOSTAT (TRTA) | |
| 8 | YELLOW | WIRE | |
| 7 | A-25A | ANTENNA (ARC) | |
| 6 | 0770033-85 | RF CABLE ASSY | |
| 5 | DV-302A | DYNAVERTER (ARC) | |
| 4 | RT-302A | TRANSCEIVER (ARC) | |
| 3 | RED | WIRE | |
| 2 | S-1360-15 | CIRCUIT BREAKER | |
| 1 | 0713743-1 | BUS BAR | |
| ITEM NO | PART NO | DESCRIPTION | INSTALLED ON |

EQUIPMENT TABLE

| W.RE CODE NO | GA | MATERIAL | LG | TERMINALS | | N/A | SERIALS |
|---|---|---|---|---|---|---|---|
| BLU/TAN | 22 | S-1460-22-610 | | SOLDER | | 0770683 | |
| BLU/TAN | 22 | S-1460-22-610 | | SOLDER | | | |
| BLU/TAN | 22 | S-1460-22-610 | | SOLDER | | | |
| BLU/WHT | 22 | S-1460-22-6-3 | | SOLDER | | | |
| BLU/WHT | 22 | S-1460 2269 | | SOLDER | | | |
| BLACK | 16 | S-1460-16-0 | | SOLDER | S-1367-2-8 | | |
| RED/BLK | 18 | S-1460-18-20 | | SOLDER | SOLDER | | |
| BLUE | 22 | S-1460-22-6 | | SOLDER | SOLDER | | |
| BLU/YEL | 22 | S-1460-22-69 | | SOLDER | SOLDER | | |
| BLU/RED | 22S | S-1461-22-67 | | SOLDER | SOLDER | | |
| GREEN | 20 | S-1460-20-5 | | SOLDER | | | |
| WHT/BLK | 22 | S-1460-22-3-0 | | SOLDER | | | |
| TAN | 22 | S-1460 22 10 | | SOLDER | | | |
| TAN/YEL | 22 | S-1460 22-109 | | SOLDER | SOLDER | | |
| TAN/RED | 22 | S-1460 22-102 | | SOLDER | SOLDER | | |
| GRY/YEL | 22 | S-1460-22-8-9 | | SOLDER | SOLDER | | |
| GRY/BLU | 22 | S-1460 22-8-6 | | SOLDER | SOLDER | | |
| WHT/YEL | 22 | S-1460-22 9-9 | | SOLDER | SOLDER | | |
| WHT/RED | 22 | S-1460-22-32 | | SOLDER | SOLDER | | |
| BLK/YEL | 22 | S-1460-22-09 | | SOLDER | SOLDER | | |
| BLACK | 16 | S-1460-16-0 | | S-1367-2-8 | SOLDER | | |
| BLK/RED | 22 | S-1460-22-0-2 | | SOLDER | SOLDER | | |
| YELLOW | 18 | S-1460-18-9-4 | | SOLDER | S-1370-1 | | |
| RED | 16 | S-1460-16-2 | | SOLDER | S-1370-2 | 0770683 | |

WIRE TABLE

CESSNA AIRCRAFT CO. COMMERCIAL AIRCRAFT DIVISION, WICHITA, KANSAS

| | NAME | DATE |
|---|---|---|
| DRAWN | G WOOD | 6-25-63 |
| GROUP | | 8-5-63 |
| CHECK | | 8-6-63 |
| PROJ | W. McCarter | 8-9-63 |

TITLE: WIRING DIAGRAM — CESSNA TRANSCEIVER 500 (OPT) 302A

Cessna.

DWG NO. 0770610

| SUPERSEDED BY | SUPERSEDES | MODEL: | REV. | PAGE: |
|---|---|---|---|---|
| | 0770610 PAGE 17.12 | 182 | | 17.12.1 |

FORM NO 80-161

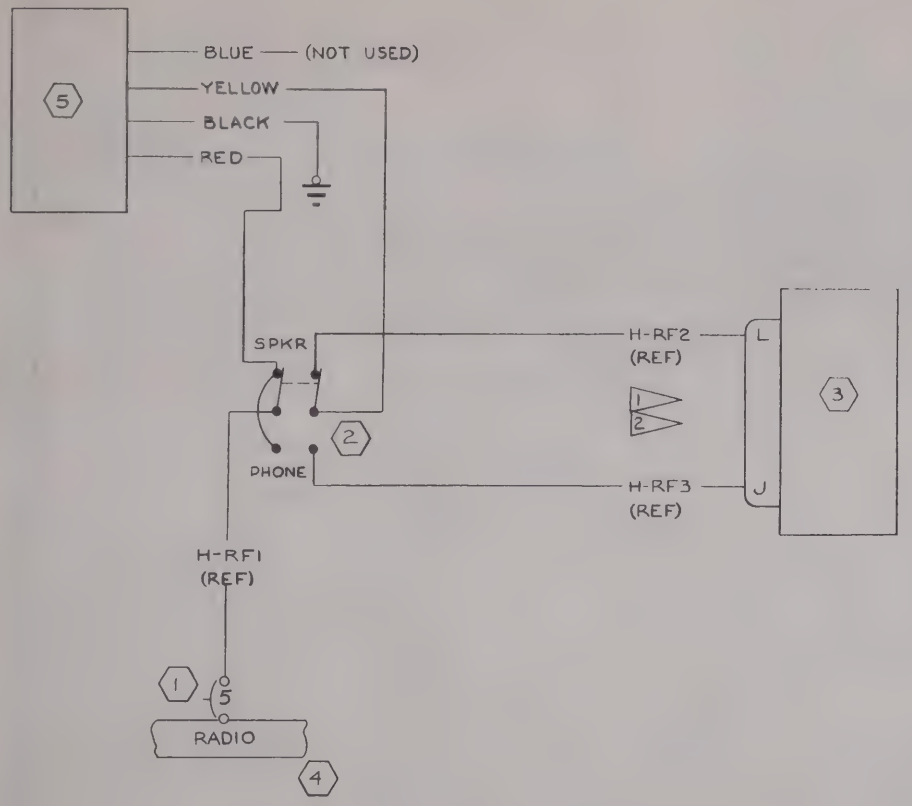


NOTE:

1. WIRE H-RF2 MAY BE CONNECTED TO ANY AUDIO ISOLATION AMPLIFIER WITH A 500 OHM INPUT. WHEN (3) IS NOT USED, WIRE H-RF3 MAY BE CONNECTED DIRECT TO THE PHONE JACK CIRCUIT.
2. WIRES WITH "H" PREFIX SHOWN ON THIS PAGE ARE DERIVED FROM 1270625, PAGE 17.5. THESE WIRES ARE PART OF 0770605 SERIES OPTIONAL MKR BCN RECEIVER INSTALLATION.

| CHG LET | REVISION | BY DATE | CHK APPD |
|---|---|---|---|
| | | | |

| | | | |
|---|---|---|---|
| 5 | MBT-12 | MKR BCN RCVR (NARO) | |
| 4 | 0713706-1 | BUS BAR | |
| 3 | 0770631-2 | ISOLATION AMP | |

| WIRE CODE NO. | GA | MATERIAL | LG | TERMINALS | | SERIALS |
|---|---|---|---|---|---|---|
| | | | | | | |

WIRE TABLE

CESSNA AIRCRAFT CO. COMMERCIAL AIRCRAFT DIVISION WICHITA KANSAS

| | NAME | DATE |
|---|---|---|
| DRAWN | G WOOD | 12-1-62 |
| GROUP | | |

TITLE: WIRING DIAGRAM — MARKER BEACON

Cessna.

NOTES:

1. WIRES D-RD7, 12, 13, 14, 15 & 16 TO BE CODED "LT DIM", "MIKE AUD", "MIKE GND", "MIKE KEY", "SPKR" & "PH-JK" RESPECTIVELY. NUMERICAL CODING PER CES 1100 IS OPTIONAL ON THERE WIRES.
2. "SPKR" CIRCUIT IS CONNECTED TO 5Ω LOAD WHEN AN EXTERNAL AMPLIFIER IS USED.

| LET | REVISION | DATE | APPD |
|---|---|---|---|
| | | | |

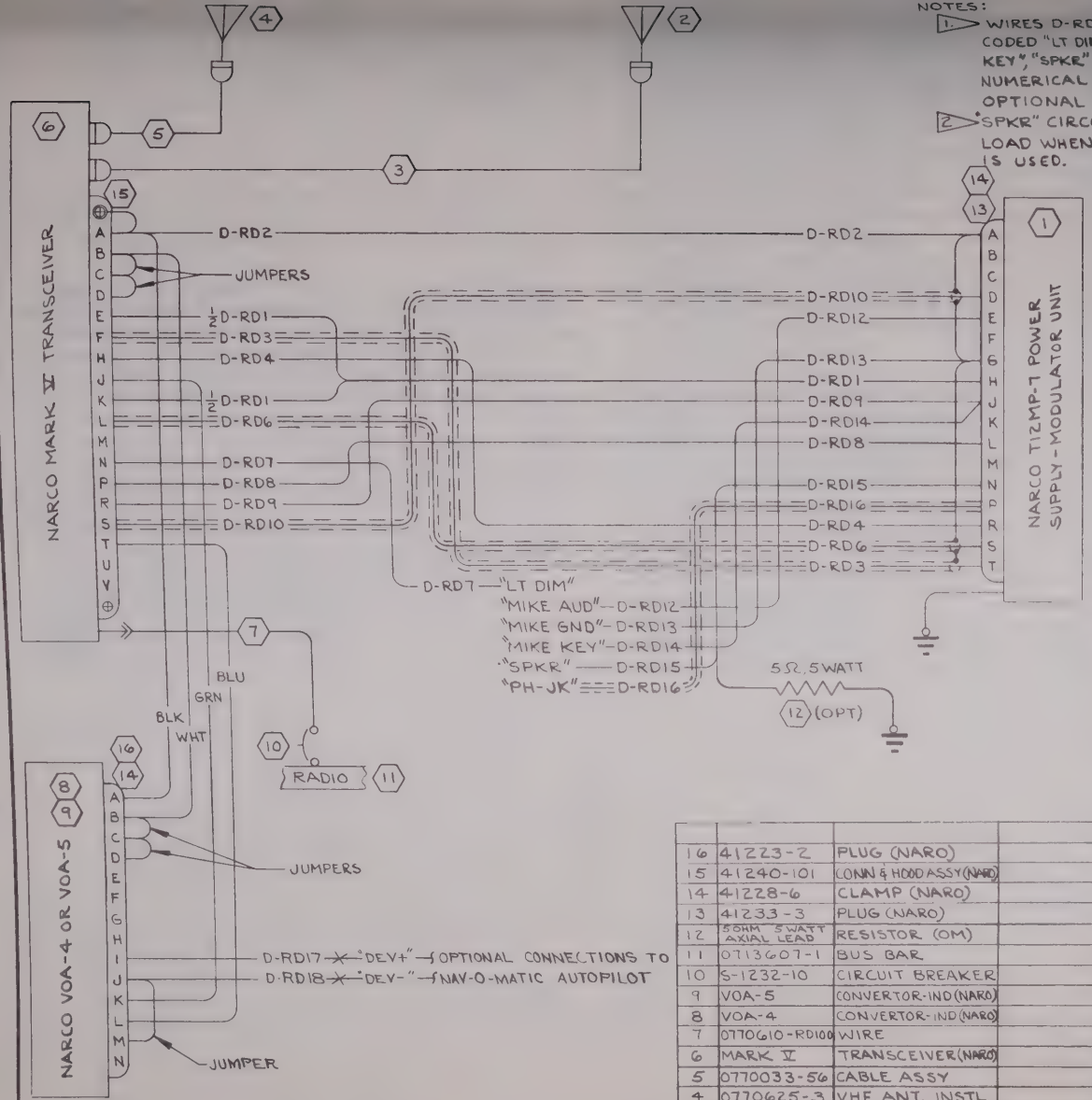


Inactive
SER 18255059 & ON
6-4-63
Gw H.W. RRS NMc

| ITEM NO | PART NO | DESCRIPTION | INSTALLED ON |
|---|---|---|---|
| 16 | 41223-2 | PLUG (NARO) | |
| 15 | 41240-101 | CONN & HOOD ASSY (NARO) | |
| 14 | 41228-6 | CLAMP (NARO) | |
| 13 | 41233-3 | PLUG (NARO) | |
| 12 | 5 OHM 5 WATT AXIAL LEAD | RESISTOR (OM) | |
| 11 | 0713607-1 | BUS BAR | |
| 10 | S-1232-10 | CIRCUIT BREAKER | |
| 9 | VOA-5 | CONVERTOR-IND (NARO) | |
| 8 | VOA-4 | CONVERTOR-IND (NARO) | |
| 7 | 0770610-RD100 | WIRE | |
| 6 | MARK V | TRANSCEIVER (NARO) | |
| 5 | 0770033-56 | CABLE ASSY | |
| 4 | 0770625-3 | VHF ANT. INSTL | |
| 3 | 0770033-60 | CABLE ASSY | |
| 2 | 0770625-12 | OMNI ANT. INSTL | |
| 1 | 0770034-4 | MOD-PWR UNIT | |

EQUIPMENT TABLE

| WIRE CODE NO | GA | MATERIAL | LG | TERMINALS | | N/A | SERIALS |
|---|---|---|---|---|---|---|---|
| D-RD11 | | OMITTED | | | | | |
| D-RD5 | | OMITTED | | | | | |
| D-RD18 | 22 | | | SOLDER | S-1370-0 | 0770686 | |
| D-RD17 | 22 | | | SOLDER | S-1370-0 | 0770686 | |
| BLUE | 22 | BELDEN 8524 | | SOLDER | SOLDER | 0770686 | |
| GREEN | 22 | | | SOLDER | SOLDER | | |
| WHITE | 22 | | | SOLDER | SOLDER | | |
| BLACK | 22 | BELDEN 8524 | | SOLDER | SOLDER | | |
| D-RD16 | 22S | | | SOLDER | 1 | | |
| D-RD15 | 20 | | | SOLDER | 1 | | |
| D-RD14 | 22 | | | SOLDER | 1 | | |
| D-RD13 | 22 | | | SOLDER | 1 | | |
| D-RD12 | 22 | | | SOLDER | 1 | | |
| D-RD10 | 22S | | | SOLDER | SOLDER | | |
| D-RD9 | 22 | | | SOLDER | SOLDER | | |
| D-RD8 | 22 | | | SOLDER | SOLDER | | |
| D-RD7 | 20 | | | SOLDER | 1 | | |
| D-RD6 | 22S | | | SOLDER | SOLDER | | |
| D-RD4 | 22 | | | SOLDER | SOLDER | | |
| D-RD3 | 22S | | | SOLDER | SOLDER | | |
| D-RD2 | 20 | | | SOLDER | SOLDER | | |
| D-RD1 | 16 | | | SOLDER | SOLDER | 0770686 | |

WIRE TABLE

CESSNA AIRCRAFT CO. COMMERCIAL AIRCRAFT DIVISION WICHITA KANSAS

| | NAME | DATE |
|---|---|---|
| DRAWN | RIDDER | 12-20-62 |
| GROUP | [illegible] | 1-10-63 |
| CHECK | R. Stuck | 1-4-63 |
| PROJ | H. McCarter | 1-10-63 |

TITLE: WIRING DIAGRAM — NARCO MARK V WITH VOA-4 OR VOA-5 (OPT)

Cessna.

DWG NO. 0770610

SUPERSEDED BY | SUPERSEDES 0770626 | MODEL: 182 | REV: | PAGE: 17.14

FORM NO. 80-161

| CHG LET | REVISION | BY DATE | CHK APPD |
|---|---|---|---|
| | | | |

NOTES:

1. CIRCUITS SHOWN WITH TRAIL ANTENNA "IN", CHANNEL ONE SELECTED.
2. CUT RF CABLE ON TUNER DUST COVER TO LENGTH REQD BY INSTL AND TERMINATE WITH UG-88 C/U CONNECTOR. THIS CONNECTOR MATES WITH UG-89/U CONNECTOR ON CONTROL PANEL.
3. WIRE LENGTHS TO BE DETERMINED ON 0770629.
4. 1270405 PAGE 17.15.1 & 1270625 PAGE 17.9.1 ARE IDENTICAL TO THIS WIRING DIAGRAM AND ARE USED FOR REF ONLY.
5. REEL ASSY MAY BE EITHER NO. 31-420, GARWIN INC, WICHITA OR SP-10010, STD PRODUCTS INC, WICHITA. NO. 31-420A GARWIN INC IS ALT.
6. COLORED WIRES & WIRES D-RH1 THRU D-RH15 ARE IDENTICAL TO & SUPERSEDE WIRES CODED THE SAME ON 0770629

| | | | |
|---|---|---|---|
| 32 | 0770610-RP5 | WIRE | |
| 31 | 0770610-RP6 | WIRE | |
| 30 | 0770610-RP7 | WIRE | |
| 29 | MS3507-10B | CLAMP | |
| 28 | PL-112 | CONNECTOR | |
| 27 | | | |
| 26 | | | |
| 25 | 26-4200-165 | CONNECTOR (AMBL) | |
| 24 | 0770033-54 | CABLE ASSY | |
| 23 | 0770033-70 | CABLE ASSY | |
| 22 | 0770033-71 | CABLE ASSY | |
| 21 | S-1232-15 | CIRCUIT BREAKER | |
| 20 | S-1232-10 | CIRCUIT BREAKER | |
| 19 | 0713706-1 | BUS BAR | |
| 18 | 0770610-LB1 | WIRE | |
| 17 | 0770610-LG1 | WIRE | |
| 16 | 0770610-LG2 | WIRE | |
| 15 | S-1103-1 | PHONE JACK | |
| 14 | 0770610-RP4 | WIRE | |
| 13 | S-1102-1 | MIKE JACK | |
| 12 | 0770610-RP1 | WIRE | |
| 11 | 0411062-9 | SPEAKER | |
| 10 | 0770625-2 | SUNAIR ANT. | |
| 9 | 0770033-55 | CABLE ASSY | |
| 8 | 0770033-39 | CABLE ASSY | |
| 7 | 0814308-2 | ANTENNA WIRE | |
| 6 | 0770630-1 | CONTROL PANEL | |
| 5 | 0812509-24 | COIL ASSY | |
| 4 | 0812800-56 | RF INVERTER | |
| 3 | 5 | REEL ASSY | |

| WIRE CODE NO. | GA | MATERIAL | LG | TERMINALS | | N/A | SERIALS |
|---|---|---|---|---|---|---|---|
| D-RH15 | | 8899 (BDN) | | 235-860 CLIP (JON) | SOLDER | 0770627 | |
| D-RH14 | | ↕ | | ↕ | ↕ | ↕ | |
| D-RH13 | | | | | | | |
| D-RH12 | | | | | | | |
| D-RH11 | | ↕ | | ↕ | | ↕ | |
| D-RH10 | | 8899 (BDN) | | 235-860 CLIP (JON) | | 0770627 | |
| D-RH9 | 14 | | | S-1367-2-6 | | 0770629 1270636 | |
| D-RH8 | 14 | | | S-1367-2-6 | | ↕ | |
| D-RH7 | 14 | | | S-1367-2-6 | | | |
| D-RH6 | 14 | | | S-1367-2-6 | | | |
| D-RH5 | 20 | | | S-341-2 | | | |
| D-RH4 | 14 | | | S-1367-2-6 | ↕ | ↕ | |
| D-RH3 | 14 | | | S-1367-2-6 | SOLDER | 0770629 1270636 | |
| D-RH2 | 14 | | | S-1367-2-6 | S-1367-2-6 | 0770630 | |
| D-RH1 | 14 | | | S-1367-2-8 | S-1367-2-6 | 0770630 | |
| BLUE | 20 | 8523 (BDN) | 3 | SOLDER | S-1370-0 | 0770629 | |
| GRAY | 20 | ↕ | ↕ | ↕ | ↕ | ↕ | |
| YELLOW | 20 | | | | | | |
| ORANGE | 20 | | | | | | |
| RED | 20 | ↕ | ↕ | ↕ | ↕ | ↕ | |
| VIOLET | 20 | 8523 (BDN) | 3 | SOLDER | S-1370-0 | 0770629 | |

WIRE TABLE

CESSNA AIRCRAFT CO COMMERCIAL AIRCRAFT DIVISION WICHITA KANSAS

| | NAME | DATE |
|---|---|---|
| DRAWN | G WOOD | 1-11-63 |
| GROUP | | |

TITLE: WIRING DIAGRAM — SUNAIR T-5-DA

Cessna.

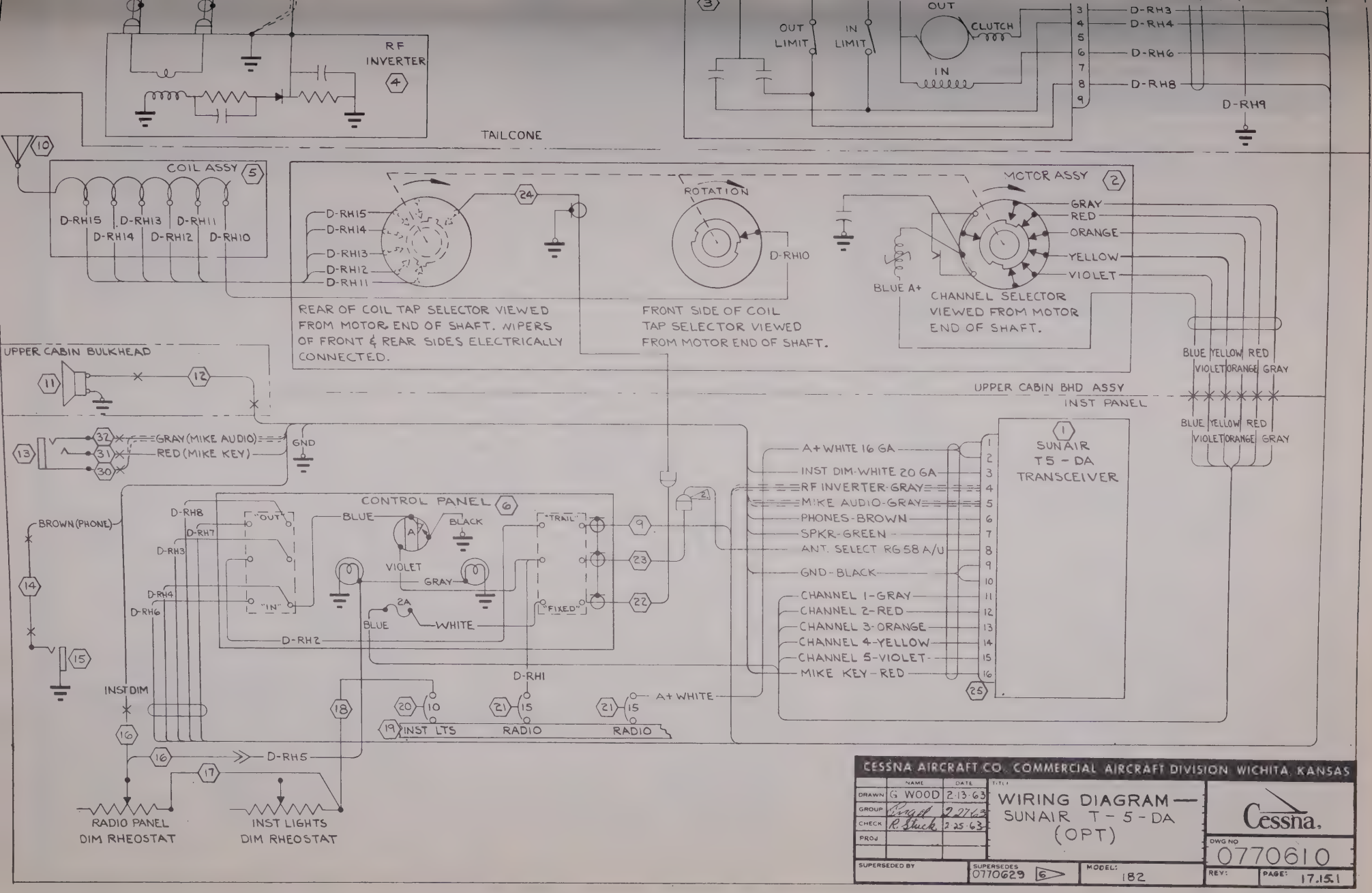


CESSNA AIRCRAFT CO. COMMERCIAL AIRCRAFT DIVISION WICHITA, KANSAS

| | NAME | DATE |
|---|---|---|
| DRAWN | G WOOD | 2-13-63 |
| GROUP | Knight | 2-27-63 |
| CHECK | R Stuck | 2-25-63 |
| PROJ | | |

TITLE: WIRING DIAGRAM — SUNAIR T-5-DA (OPT)

Cessna

DWG NO 0770610

REV:

PAGE: 17.15.1

SUPERSEDED BY

SUPERSEDES 0770629 6

MODEL: 182

(SR 4099)

| CHG LET | REVISION | BY / DATE | CHK / APPD |
|---|---|---|---|
| A | PIN 13 ON XMTR WAS PHONE-ADF; PIN 14 ON XMTR WAS AUDIO-ADF; (SR4099) | WJR 3-13-63 | DM LAS |
| B | DELETE NOTE 3; ADD S-1360-5 CKT BKR; REMOVED 0713706-1 INACTIVATED DWG (SR4456) (SR4457) | WJR 9-28-64 | RRS |

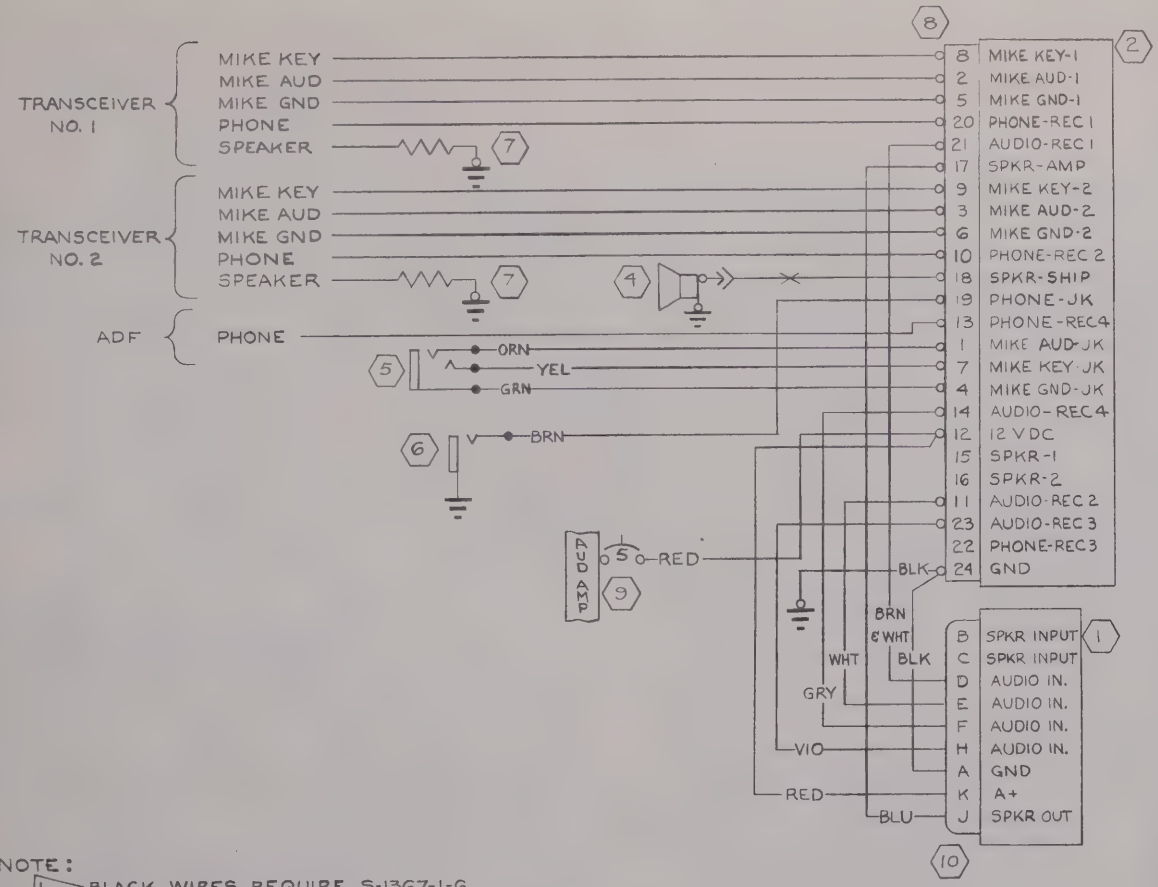


Inactive SER 18255845 & ON
W.J.R. 9-28-64
H J W
RRS

NOTE:
1. BLACK WIRES REQUIRE S-1367-1-6 TERMINALS ON SELECTOR SWITCH END, & S-1367-1-8 TERMINAL ON GND END.
2. RED WIRES REQUIRE S-1367-1-6 TERMINALS ON SELECTOR SWITCH END, & S-1367-1-8 TERMINAL ON CIRCUIT BREAKER END.
3. ~~CONNECT TO RADIO CIRCUIT BREAKER, PREFERABLY THE 5 AMP BREAKER USED ON THE ADF INSTL.~~

| WIRE CODE NO. | GA | MATERIAL | LG | TERMINALS | | N/A | SERIALS |
|---|---|---|---|---|---|---|---|
| BROWN & WHITE | 20 | BELDEN 8523 | | S-1367-1-6 | SOLDER | 0770614 | |
| WHITE | 20 | | | S-1367-1-6 | SOLDER | | |
| GRAY | 20 | | | S-1367-1-6 | SOLDER | | |
| VIOLET | 20 | | | S-1367-1-6 | SOLDER | | |
| BLUE | 20 | | | S-1367-1-6 | SOLDER | | |
| GREEN | 20 | | | S-1367-1-6 | SOLDER | | |
| YELLOW | 20 | | | S-1367-1-6 | SOLDER | | |
| ORANGE | 20 | | | S-1367-1-6 | SOLDER | | |
| RED | 20 | | | 2 | SOLDER | | |
| BROWN | 20 | | | S-1367-1-6 | SOLDER | | |
| BLACK | 20 | BELDEN 8523 | | 1 | SOLDER | 0770614 | |

WIRE TABLE

| | PART NO. | DESCRIPTION | INSTALLED ON |
|---|---|---|---|
| 10 | 126-222 | CONNECTOR (AMBE) | |
| 9 | S-1360-5 | CIRCUIT BREAKER | |
| 8 | 601-2104-12 | TERMINAL BLOCK | (KKE) |
| 7 | 50HM 5 WATT AXIAL LEAD | RESISTOR (OM) | |
| 6 | S-1103-1 | PHONE JACK | |
| 5 | S-1102-1 | MIKE JACK | |
| 4 | 0411062-9 | SPEAKER ASSY | |
| 3 | | | |
| 2 | 1270616-1 | XMTR & AUD SEL SW | |
| 1 | KA-10 | ISO AMPLIFIER (KG) | |

CESSNA AIRCRAFT CO. COMMERCIAL AIRCRAFT DIVISION, WICHITA, KANSAS

| | NAME | DATE |
|---|---|---|
| DRAWN | G WOOD | 12-20-62 |
| GROUP | Eng'd | 2-19-63 |
| CHECK | R Stuck | 2-25-63 |
| PROJ | [illegible] | 3-1-63 |

TITLE: WIRING DIAGRAM — TRANSMITTER & AUDIO SELECTOR SWITCH WITH KING KA-10 AMPLIFIER

Cessna.

DWG NO 0770610

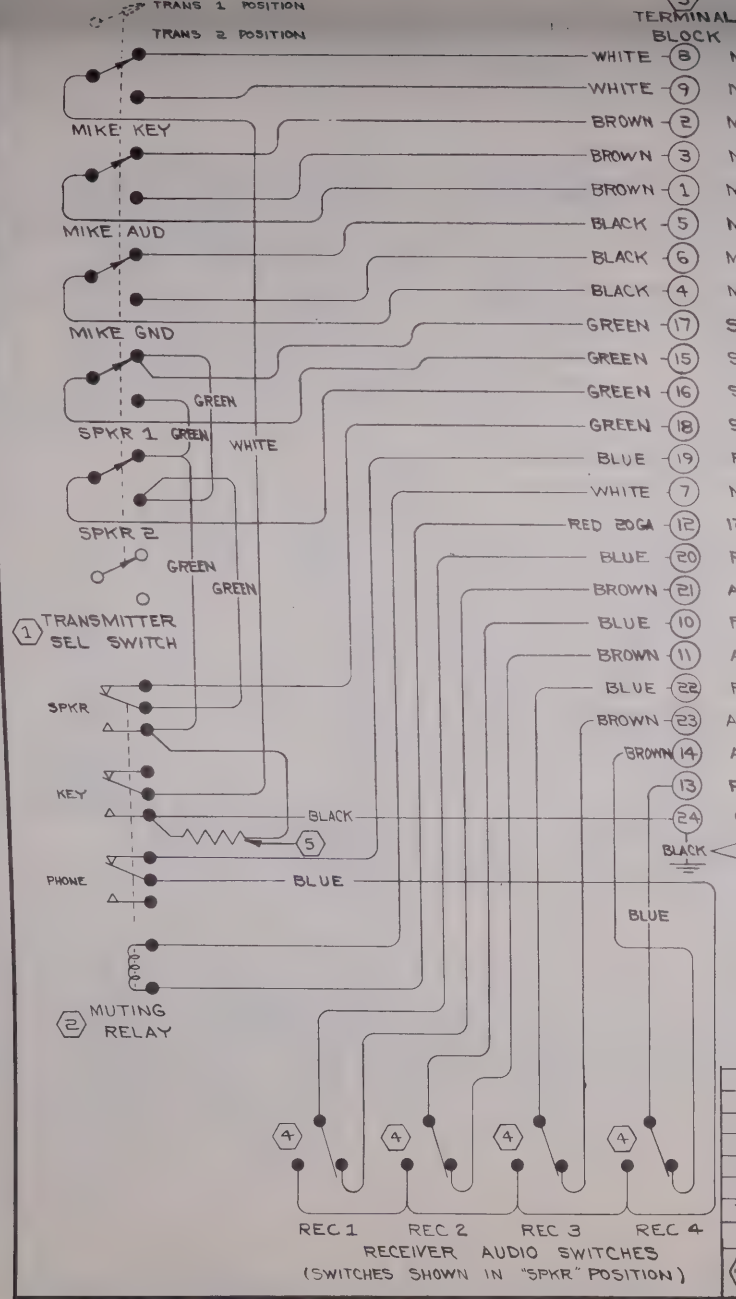


NOTES:

1. ALL WIRES TO BE 22GA COLOR CODED BELDEN WIRE NO. 8524 EXCEPT THE RED WIRE TO BE 20 GA. BELDEN WIRE NO. 8523.
2. CONNECT TERMINAL 24 TO MOUNTING ENCLOSURE TO PROVIDE AIRFRAME GND
3. REFER TO 1270616 FOR SWITCH ASSEMBLY DETAILS

| LET | REVISION | DATE | APPD |
|---|---|---|---|
| A | TERM 14 WAS AUDIO - ADF; TERM 13 WAS PHONE - ADF; REC 4 WAS ADF (SR4099) | WJR 3-13-63 | |

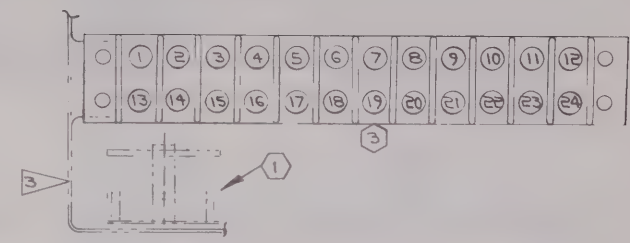


TOP VIEW OF TERMINAL BLOCK AS ASSEMBLED IN SWITCH BOX
TERMINAL BLOCK TO BE CONNECTED TO OTHER COMPONENTS IN BOX SO THAT CIRCUIT FUNCTION & TERMINAL NUMBERS SHOWN ON SCHEMATIC AGREE WITH THIS VIEW

| ITEM NO | PART NO | DESCRIPTION | INSTALLED ON |
|---|---|---|---|
| 5 | 50HM, SWATT AXIAL LEAD | RESISTOR (OM) | |
| 4 | 8816K9 | SWITCH (CUT) | |
| 3 | 601-2104-12 | TERMINAL BLOCK (KKE) | |
| 2 | 1205-48-3C-AG-12VDC | RELAY (GN) | |
| 1 | PA-1018 | ROTARY SWITCH (CNY) | |

EQUIPMENT TABLE

| WIRE CODE NO | GA | MATERIAL | LG | TERMINALS | | N/A | SERIALS |
|---|---|---|---|---|---|---|---|
| | | 1 | | SOLDER | SOLDER | 1270616 | |

WIRE TABLE

CESSNA AIRCRAFT CO. COMMERCIAL AIRCRAFT DIVISION, WICHITA, KANSAS

| | NAME | DATE |
|---|---|---|
| DRAWN | RIDDER | 2-15-63 |
| GROUP | Engell | 2-28-63 |
| CHECK | R. Stuck | 2-25-63 |
| PROJ | Engell | 3-1-63 |

TITLE: WIRING DIAGRAM — TRANSMITTER AND AUDIO SELECTOR SWITCHES (OPT)

Cessna.

DWG NO 0770610

SUPERSEDED BY | SUPERSEDES 0770610 PAGE 17.6 | MODEL 182 | REV A | PAGE 17.17

FORM NO. 80-161

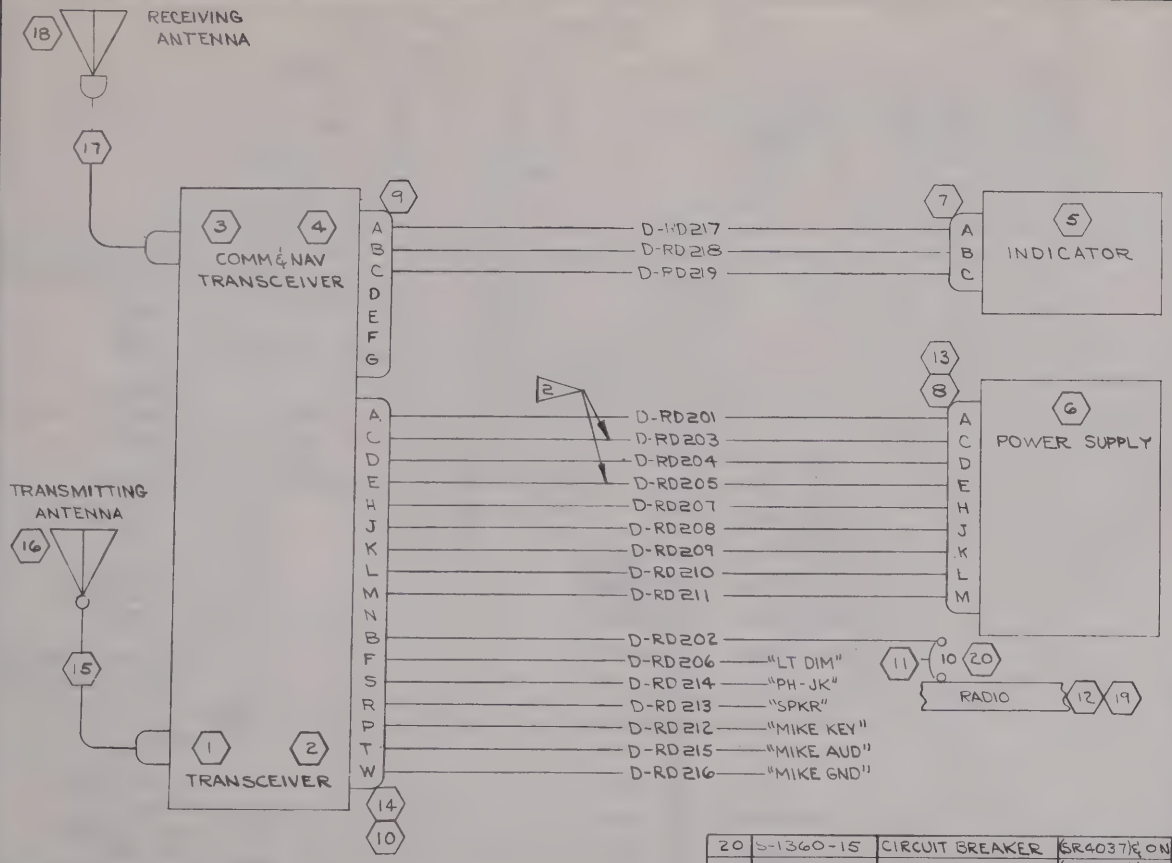


| CHG LET | REVISION | BY / DATE | CHK / APPD |
|---|---|---|---|
| | | | |

Inactive SER (18255059) & ON
W. J. R. 5-14-63
RRS
NMC

NOTE:

1. WHEN THIS DIAGRAM IS USED IN CONJUNCTION WITH AN ISOLATION AMPLIFIER AND THE SPKR CIRCUIT IS NOT USED, D-RD213 IS TO BE CONNECTED TO GND THRU AN OHMITE 5 OHM, 5 WATT AXIAL LEAD RESISTOR OR EQUIVALENT.

2 WIRES -RD403 & -RD405 TO BE TWISTED TOGETHER TO FORM A TWISTED PAIR (FOR REDUCED POWER SUPPLY HUM)

3 WIRES -RD206, -212, -213, -214, -215, -216 TO BE CODED "LT DIM", "MIKE KEY", "SPKR", "PH-JK", "MIKE AUD", & "MIKE GND" RESPECTIVELY. NUMERICAL CODING PER CES 1100 IS OPTIONAL ON THESE WIRES.

| ITEM NO. | PART NO | DESCRIPTION | SERIALS |
|---|---|---|---|
| 20 | S-1360-15 | CIRCUIT BREAKER | (SR4037) & ON |
| 19 | 0713743-1 | BUS BAR | (SR4037) & ON |
| 18 | 0770625-12 | OMNI ANT. INSTL | |
| 17 | 0770033-63 | CABLE ASSY | |
| 16 | 0770625-3 | XMTR ANT. INSTL | |
| 15 | 0770033-56 | CABLE ASSY | |
| 14 | 092-0004-00 | HOOD (KG) | |
| 13 | 092-0003-00 | HOOD (KG) | |
| 12 | 0713706-1 | BUS BAR | THRU (SR4037) |
| 11 | S-1232-15 | CIRCUIT BREAKER | THRU (SR4037) |
| 10 | 030-2002-00 | RECEPTACLE (KG) | |
| 9 | 030-2013-00 | CONNECTOR (KG) | |
| 8 | 030-2000-00 | RECEPTACLE (KG) | |
| 7 | MS3106A10SL-3S | CONNECTOR (KG) | |
| 6 | KS-501 (A) | POWER SUPPLY (KG) | |
| 5 | KI-200 | INDICATOR (KG) | |
| 4 | KX-120 | COMM & NAV XCVR (KG) | |
| 3 | KX-100 | COMM & NAV XCVR (KG) | |
| 2 | KY-95 | TRANSCEIVER (KG) | |
| 1 | KY-90 | TRANSCEIVER (KG) | |

| WIRE CODE NO. | GA | MATERIAL | LG | TERMINALS | | | SERIALS |
|---|---|---|---|---|---|---|---|
| D-RD219 | 22 | | | SOLDER | SOLDER | 0770633 | |
| D-RD218 | 22 | | | | SOLDER | | |
| D-RD217 | 22 | | | | SOLDER | | |
| D-RD216 | 22 | | | | 3 | | |
| D-RD215 | 22 | | | | | | |
| D-RD214 | 22 | | | | | | |
| D-RD213 | 22 | | | | | | |
| D-RD212 | 22 | | | | 3 | | |
| D-RD211 | 22 | | | | SOLDER | | |
| D-RD210 | 22 | | | | | | |
| D-RD209 | 22 | | | | | | |
| D-RD208 | 22 | | | | | | |
| D-RD207 | 22 | | | | SOLDER | | |
| D-RD206 | 18 | | | | 3 | | |
| D-RD205 | 16 | | | | SOLDER | | |
| D-RD204 | 22 | | | | SOLDER | | |
| D-RD203 | 16 | | | | SOLDER | | |
| D-RD202 | 16 | | | | S-1367-1-8 | | |
| D-RD201 | 22 | | | SOLDER | SOLDER | 0770633 | |

WIRE TABLE

CESSNA AIRCRAFT CO. COMMERCIAL AIRCRAFT DIVISION WICHITA KANSAS

| | NAME | DATE |
|---|---|---|
| DRAWN | RIDDER | 3-8-63 |
| GROUP | [illegible] | 3-8-63 |
| CHECK | R. Stuck | 3-28-63 |
| PROJ | N. McCarter | 3-29-63 |

TITLE: WIRING DIAGRAM — KING KY-90, KY-95, KX-100 & KX-120 (OPT)

Cessna.

DWG NO. 0770610

| | | | |
|---|---|---|---|
| A | 030-2038-00 RECEPTACLE (KG), & GRY/GRN & GRY/RED WIRES ADD NOTE 3 (SR 4448) | 11-1-63 | |

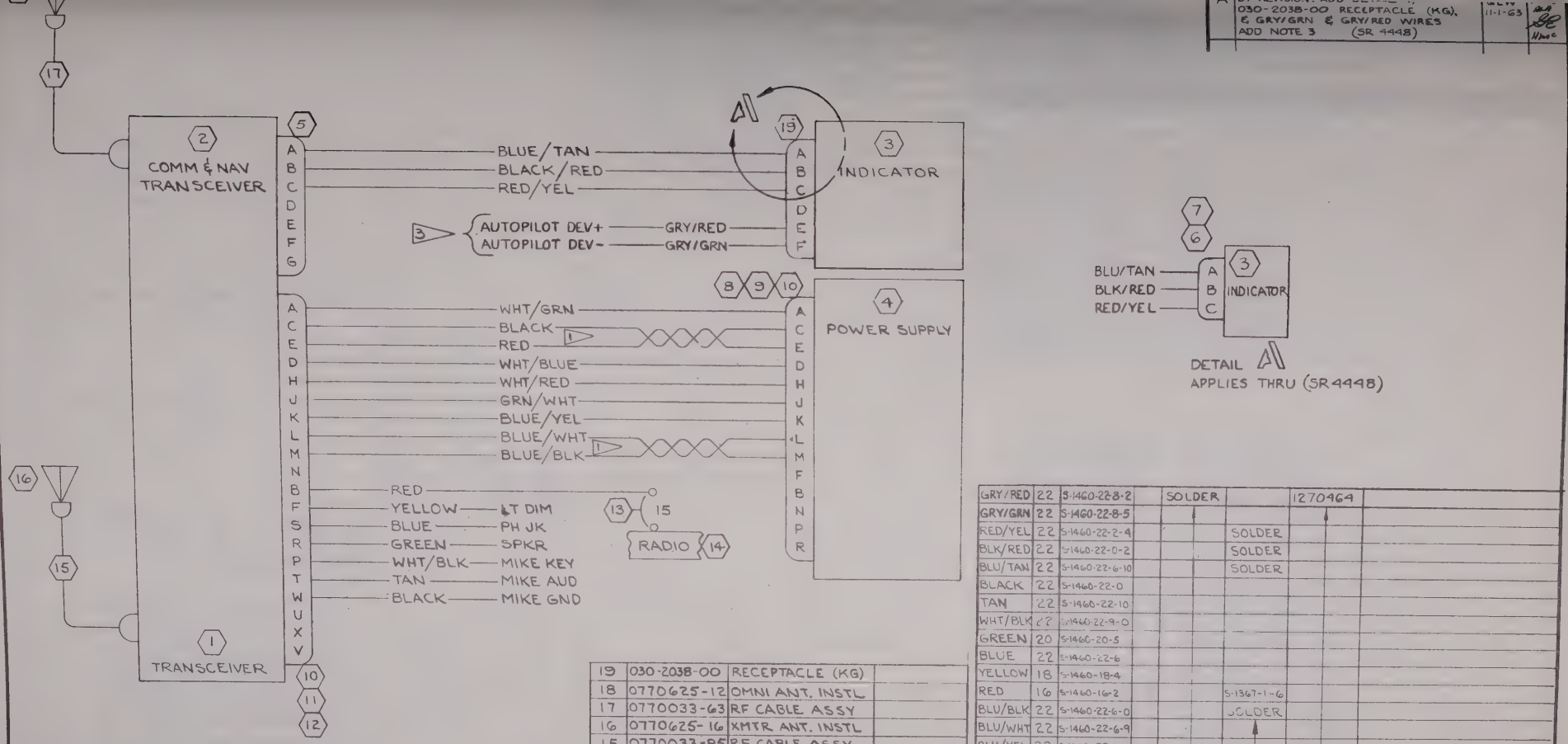





DETAIL A
APPLIES THRU (SR4448)

NOTES:

1. WIRES FLAGGED THUS TO BE TWISTED TOGETHER TO FORM A TWISTED PAIR.
2. WHEN THIS DIAGRAM IS USED IN CONJUNCTION WITH AN ISOLATION AMPLIFIER AND THE SPEAKER CIRCUIT IS NOT USED, THE GREEN WIRE IS TO BE CONNECTED TO GND THRU AN OHMITE 5 OHM, 5 WATT AXIAL LEAD RESISTOR.
3. END OF WIRES TO BE COVERED WITH SLEEVING & TIED INTO CABLE UNTIL USED.

| ITEM NO | PART NO | DESCRIPTION | INSTALLED ON |
|---|---|---|---|
| 19 | 030-2038-00 | RECEPTACLE (KG) | |
| 18 | 0770625-12 | OMNI ANT. INSTL | |
| 17 | 0770033-63 | RF CABLE ASSY | |
| 16 | 0770625-16 | XMTR ANT. INSTL | |
| 15 | 0770033-85 | RF CABLE ASSY | |
| 14 | 0713743-1 | BUS BAR | |
| 13 | S-1360-15 | CIRCUIT BREAKER | |
| 12 | 030-1010-00 | HOOD (KG) | |
| 11 | 030-2002-00 | RECEPTACLE (KG) | |
| 10 | 030-1008-00 | LEVER & PIVOT ASSY (KG) | |
| 9 | 030-1009-00 | HOOD (KG) | |
| 8 | 030-2000-00 | RECEPTACLE (KG) | |
| 7 | 030-1003-00 | CLAMP (KG) | |
| 6 | 030-2017-00 | RECEPTACLE (KG) | |
| 5 | 030-2013-00 | CONNECTOR (KG) | |
| 4 | KS-501 (A) | POWER SUPPLY (KG) | |
| 3 | KI-200 | INDICATOR (KG) | |
| 2 | KX-120 | TRANSCEIVER (KG) | |
| 1 | KY-95 | TRANSCEIVER (KG) | |

EQUIPMENT TABLE

| WIRE CODE NO | GA | MATERIAL | LG | TERMINALS | | N/A | SERIALS |
|---|---|---|---|---|---|---|---|
| GRY/RED | 22 | S-1460-22-8-2 | | SOLDER | | 1270464 | |
| GRY/GRN | 22 | S-1460-22-8-5 | | | | | |
| RED/YEL | 22 | S-1460-22-2-4 | | | SOLDER | | |
| BLK/RED | 22 | S-1460-22-0-2 | | | SOLDER | | |
| BLU/TAN | 22 | S-1460-22-6-10 | | | SOLDER | | |
| BLACK | 22 | S-1460-22-0 | | | | | |
| TAN | 22 | S-1460-22-10 | | | | | |
| WHT/BLK | 22 | S-1460-22-9-0 | | | | | |
| GREEN | 20 | S-1460-20-5 | | | | | |
| BLUE | 22 | S-1460-22-6 | | | | | |
| YELLOW | 18 | S-1460-18-4 | | | | | |
| RED | 16 | S-1460-16-2 | | | S-1367-1-6 | | |
| BLU/BLK | 22 | S-1460-22-6-0 | | | SOLDER | | |
| BLU/WHT | 22 | S-1460-22-6-9 | | | | | |
| BLU/YEL | 22 | S-1460-22-6-4 | | | | | |
| GRN/WHT | 20 | S-1460-20-5-9 | | | | | |
| WHT/RED | 22 | S-1460-22-9-2 | | | | | |
| WHT/BLU | 22 | S-1460-22-9-6 | | | | | |
| RED | 16 | S-1460-16-2 | | | | | |
| BLACK | 16 | S-1460-16-0 | | | | | |
| WHT/GRN | 22 | S-1460-22-9-5 | | SOLDER | SOLDER | 1270464 | |

WIRE TABLE

CESSNA AIRCRAFT CO., COMMERCIAL AIRCRAFT DIVISION, WICHITA, KANSAS

| | NAME | DATE |
|---|---|---|
| DRAWN | RIDDER | 5-15-63 |
| GROUP | [illegible] | 6-5-63 |
| CHECK | [illegible] | 5-31-63 |
| PROJ | N. McCarter | 6-5-63 |

TITLE: WIRING DIAGRAM — KING KY-95 & KX-120 (OPT)

Cessna.

DWG NO. 0770610

| SUPERSEDED BY | SUPERSEDES | MODEL: | REV: | PAGE: |
|---|---|---|---|---|
| | 0770610 PAGE 17.18 | 182 | A | 17.18.1 |

FORM NO. 80-161

(SR 4037-9)

| CHG LET | REVISION | BY / DATE | CHK / APPD |
|---|---|---|---|
| A | BY REVISION: TITLE WAS "ARC TYPE R-502B MARKER BEACON RECEIVER (OPT)" S-382-1 WAS S-382-2 WIRE CONNECTIONS CHANGED ON S-382-1 & S-392-1 (SR 4037-9) | GLW 8-30-63 | RRS RA HMC |
| B | BY REVISION: PINS 1 & 2 ON MKR BCN LIGHTS HAVE BEEN REVERSED | GLW 10-1-63 | RRS RA HMC |
| C | BY REVISION: ADD 1K OHM RESISTOR & 470 Ω RESISTOR. ADD BLK/BLU WIRE TO SHIPS GND. | GLW 1-24-64 | [illegible] |

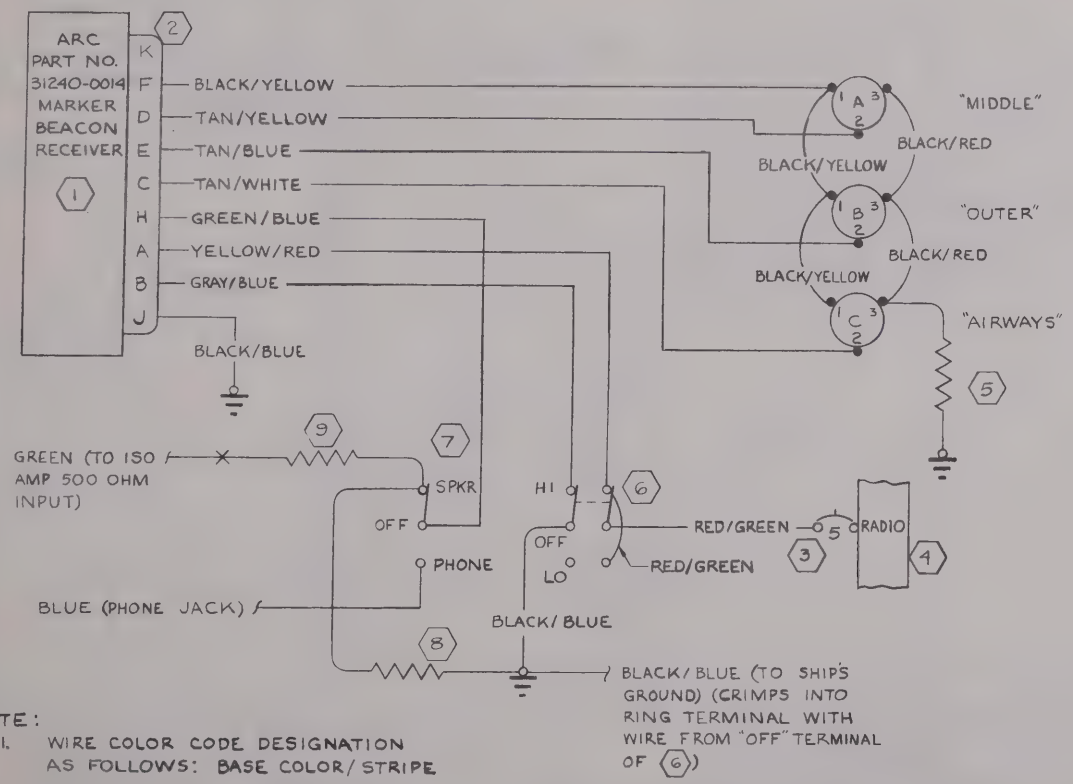


NOTE:
1. WIRE COLOR CODE DESIGNATION AS FOLLOWS: BASE COLOR/STRIPE

| WIRE CODE NO. | GA | MATERIAL | LG | TERMINALS | | N/A | SERIALS |
|---|---|---|---|---|---|---|---|
| YEL/RED | 20 | S-1460-20-4-2 | | SOLDER | S-1367-1-6 | 0770692 | |
| BLACK/BLU | 22 | S-1460-22-0-6 | | SOLDER | S-1367-1-8 | | |
| GRAY/BLU | 22 | S-1460-22-8-6 | | S-1367-1-6 | SOLDER | | |
| GREEN/BLU | 20 | S-1460-20-5-6 | | S-1367-1-6 | SOLDER | | |
| TAN/WHT | 22 | S-1460-22-10-9 | | SOLDER | SOLDER | | |
| TAN/BLUE | 22 | S-1460-22-10-6 | | SOLDER | SOLDER | | |
| BLACK/YEL | 22 | S-1460-22-0-4 | | SOLDER | SOLDER | | |
| TAN/YEL | 22 | S-1460-22-10-4 | | SOLDER | SOLDER | | |
| RED/GREEN | 20 | S-1460-20-2-5 | | S-1367-1-6 | S-1367-1-6 | | |
| GREEN | 20 | S-1460-20-5 | | S-1367-1-6 | | | |
| BLUE | 22 | S-1460-22-6 | | S-1367-1-6 | | 0770692 | |

WIRE TABLE

| | PART NO | DESCRIPTION | INSTALLED ON |
|---|---|---|---|
| 9 | 1K Ω, ½ WATT | RESISTOR (OM) | |
| 8 | 470 Ω, ½ WATT | RESISTOR (OM) | |
| 7 | S-382-1 | SWITCH | |
| 6 | S-392-1 | SWITCH | |
| 5 | 40Ω, 3 WATT | RESISTOR (OM) | |
| 4 | 0713743-1 | BUS BAR | |
| 3 | S-1360-5 | CIRCUIT BREAKER | |
| 2 | 28371-009 | PLUG (ARC) | |
| 1 | 31240-0014 | MARKER BCN RCVR | (ARC) |

CESSNA AIRCRAFT CO., COMMERCIAL AIRCRAFT DIVISION, WICHITA, KANSAS

| | NAME | DATE |
|---|---|---|
| DRAWN | G WOOD | 4-22-63 |
| GROUP | NEW | [illegible] |
| CHECK | R. [illegible] | 5-13-63 |
| PROJ | N. McCarter | 5-17-63 |

TITLE: WIRING DIAGRAM — CESSNA MARKER BEACON 300 (OPT) (ARC TYPE 502B)

Cessna.

DWG NO 0770610

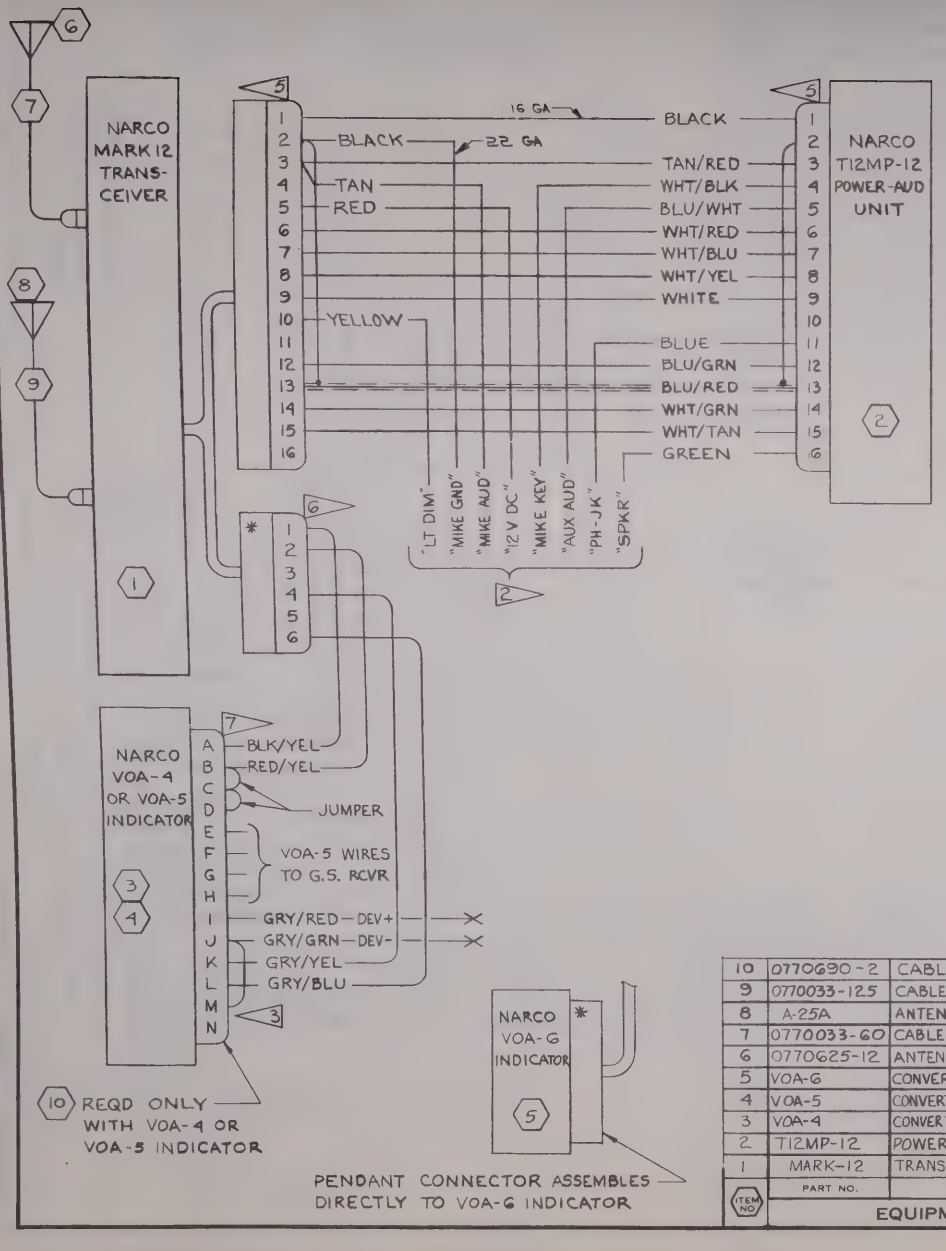


1. COLOR CODE DESIGNATION AS FOLLOWS: BASE COLOR/STRIPE.
2. MACHINE STAMP CIRCUIT FUNCTION ON THESE WIRES.
3. DEV+, DEV- & JUMPER FROM PIN J TO PIN M ARE REQD FOR NAV-O-MATIC 300 AUTOPILOT.
4. WIRE "AUX AUD" TO BE INSULATED ON END WITH VINYL SLEEVING & TIED IN CABLE ASSY UNTIL A RADIO COMBINATION REQUIRES ITS USE.
5. IDENTICAL 16 PIN CONNECTORS ARE PART OF NARCO CONNECTOR KIT EL-2052. KIT EL-2052 NOT SUPPLIED WITH MARK-12 INSTL KIT.
6. NARCO PLUG NO. K 4111G-1 SUPPLIED WITH MK 12 INSTL KIT.
7. MS3106A-20-27S PLUG & MS3057-12 CLAMP SUPPLIED WITH VOA-4 OR VOA-5 INDICATOR.

| WIRE CODE NO. | GA | MATERIAL | LG | TERMINALS | | N/A | SERIALS |
|---|---|---|---|---|---|---|---|
| GREEN | 20 | S-1460-20-5 | | SOLDER | | 0770690 | |
| GRY/BLU | 22 | S-1460-22-8-6 | | SOLDER | SOLDER | | |
| GRY/YEL | 22 | S-1460-22-8-4 | | SOLDER | SOLDER | | |
| GRY/GRN | 22 | S-1460-22-8-5 | | SOLDER | S-1370-0 | | |
| GRY/RED | 22 | S-1460-22-8-2 | | SOLDER | S-1370-0 | | |
| RED/YEL | 22 | S-1460-22-2-4 | | SOLDER | SOLDER | | |
| BLK/YEL | 22 | S-1460-22-0-4 | | SOLDER | SOLDER | | |
| BLACK | 22 | S-1460-22-0 | | SOLDER | | | |
| TAN | 22 | S-1460-22-10 | | SOLDER | | | |
| WHT/TAN | 22 | S-1460-22-9-10 | | SOLDER | SOLDER | | |
| WHT/GRN | 22 | S-1460-22-9-5 | | SOLDER | SOLDER | | |
| BLU/RED | 22 | S-1461-22-6-2 | | SOLDER | SOLDER | | |
| BLU/GRN | 22 | S-1460-22-6-5 | | SOLDER | SOLDER | | |
| BLUE | 22 | S-1460-22-6 | | SOLDER | | | |
| WHT/YEL | 22 | S-1460-22-9-4 | | SOLDER | SOLDER | | |
| WHT/BLU | 22 | S-1460-22-9-6 | | SOLDER | SOLDER | | |
| WHT/RED | 22 | S-1460-22-9-2 | | SOLDER | SOLDER | | |
| BLU/WHT | 22 | S-1460-22-6-9 | | SOLDER | | | |
| WHT/BLK | 22 | S-1460-22-9-0 | | SOLDER | | | |
| TAN/RED | 22 | S-1460-22-10-2 | | SOLDER | SOLDER | | |
| | | | | | | | |
| YELLOW | 18 | S-1460-18-4 | | SOLDER | | | |
| RED | 16 | S-1460-16-2 | | SOLDER | | | |
| BLACK | 16 | S-1460-16-0 | | SOLDER | SOLDER | | |
| WHITE | 14 | | | SOLDER | SOLDER | 0770690 | |

WIRE TABLE

| ITEM NO | PART NO. | DESCRIPTION | INSTALLED ON |
|---|---|---|---|
| 10 | 0770690-2 | CABLE ASSY | |
| 9 | 0770033-125 | CABLE ASSY-COMM | |
| 8 | A-25A | ANTENNA INSTL (ARC) | |
| 7 | 0770033-60 | CABLE ASSY-OMNI | |
| 6 | 0770625-12 | ANTENNA INSTL | |
| 5 | VOA-G | CONVERTOR-IND (NARO) | |
| 4 | VOA-5 | CONVERTOR-IND (NARO) | |
| 3 | VOA-4 | CONVERTOR-IND (NARO) | |
| 2 | T12MP-12 | POWER-AUDIO UNIT (NARO) | |
| 1 | MARK-12 | TRANSCEIVER (NARO) | |

EQUIPMENT TABLE

CESSNA AIRCRAFT CO. COMMERCIAL AIRCRAFT DIVISION-WICHITA, KANSAS

| | NAME | DATE |
|---|---|---|
| DRAWN | G. WOOD | 4-24-63 |
| GROUP | | 5-10-63 |
| CHECK | K. Stuck | 5-13-63 |
| PROJ | N. McCarter | 5-17-63 |

TITLE: WIRING DIAGRAM — NARCO MARK-12 WITH VOA-4, VOA-5 OR VOA-6 (OPT)

Cessna.

DWG NO. 0770610

| SUPERSEDED BY | SUPERSEDES | MODEL | REV: | PAGE: |
|---|---|---|---|---|
| | | 182 | | 17.20 |

FORM NO. 80-161

(SR4037- )

| CHG LET | REVISION | BY DATE | CHK APPD |
|---|---|---|---|
| | | | |

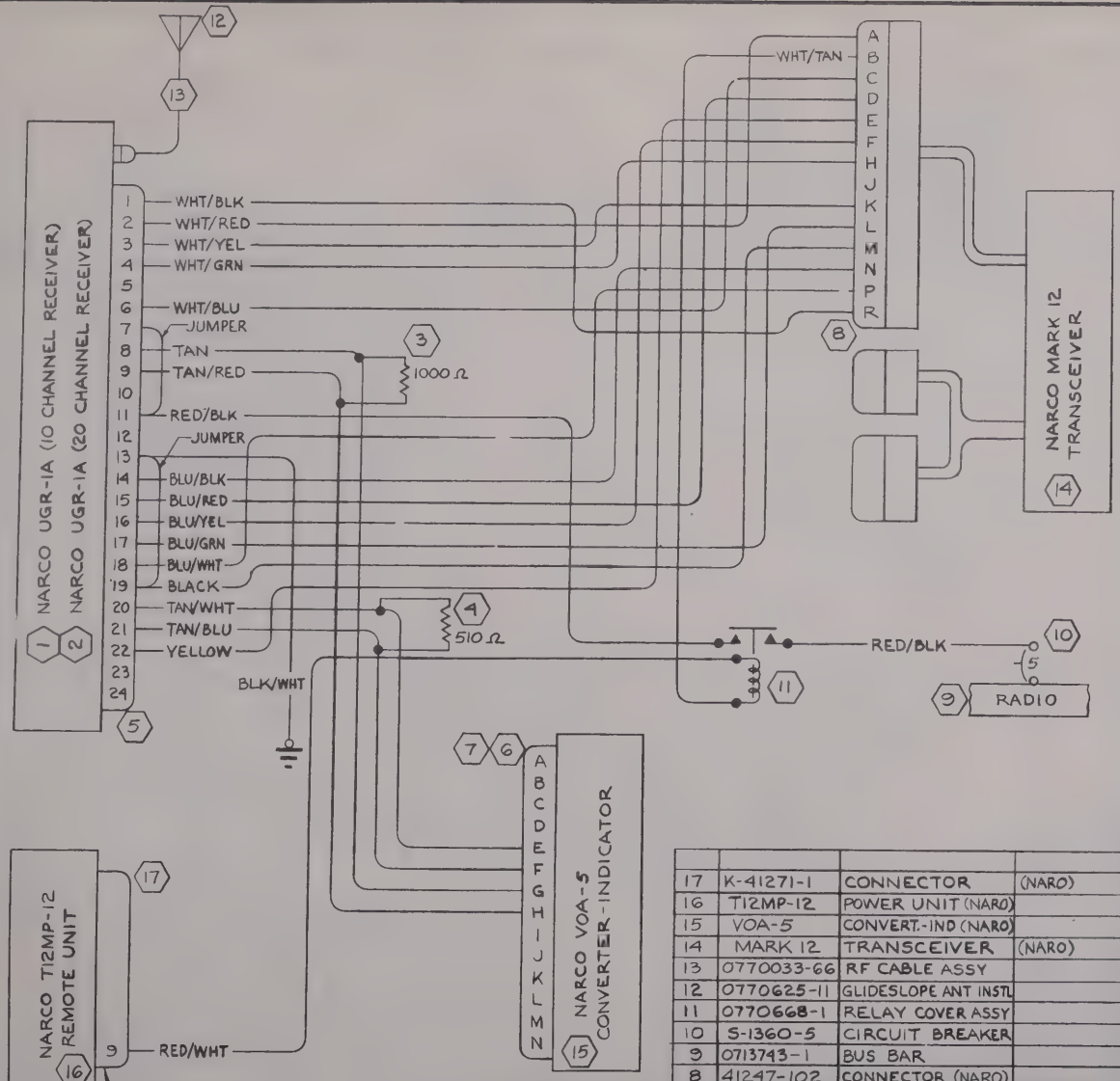


| | | | |
|---|---|---|---|
| 17 | K-41271-1 | CONNECTOR | (NARO) |
| 16 | T12MP-12 | POWER UNIT (NARO) | |
| 15 | VOA-5 | CONVERT.-IND (NARO) | |
| 14 | MARK 12 | TRANSCEIVER | (NARO) |
| 13 | 0770033-66 | RF CABLE ASSY | |
| 12 | 0770625-11 | GLIDESLOPE ANT INSTL | |
| 11 | 0770668-1 | RELAY COVER ASSY | |
| 10 | S-1360-5 | CIRCUIT BREAKER | |
| 9 | 0713743-1 | BUS BAR | |
| 8 | 41247-102 | CONNECTOR (NARO) | |
| 7 | 41228-6 | CLAMP (NARO) | |
| 6 | 41223-2 | PLUG (NARO) | |
| 5 | 41246-1 | CONN ASSY (NARO) | |
| 4 | 510Ω ±5% ½ WATT | RESISTOR (OM) "LITTLE DEVIL" | |
| 3 | 1000Ω ±10% ½ WATT | RESISTOR (OM) "LITTLE DEVIL" | |
| 2 | UGR-1A 20 CH | RECEIVER (NARO) | |
| 1 | UGR 1A 10 CH | RECEIVER (NARO) | |
| ITEM NO. | PART NO. | DESCRIPTION | INSTALLED ON |

| WIRE CODE NO. | GA | MATERIAL | LG | TERMINALS | | N/A | SERIALS |
|---|---|---|---|---|---|---|---|
| TAN/BLU | 22 | S-1460-22-10-6 | | SOLDER | SOLDER | 1270648 | |
| TAN/WHT | 22 | S-1460-22-10-9 | | | | | |
| BLACK | 22 | S-1460-22-0 | | | | | |
| BLU/WHT | 22 | S-1460-22-6-9 | | | | | |
| BLU/GRN | 22 | S-1460-22-6-5 | | | | | |
| BLU/YEL | 22 | S-1460-22-6-4 | | | | | |
| BLU/RED | 22 | S-1460-22-6-2 | | | | | |
| BLU/BLK | 22 | S-1460-22-6-0 | | | | | |
| TAN/RED | 22 | S-1460-2210-2 | | | | | |
| TAN | 22 | S-1460-22-10 | | | | | |
| WHT/BLU | 22 | S-1460-22-9-6 | | | | | |
| WHT/GRN | 22 | S-1460-22-9-5 | | | | | |
| WHT/YEL | 22 | S-1460-22-9-4 | | | | | |
| WHT/RED | 22 | S-1460-22-9-2 | | | | | |
| WHT/BLK | 22 | S-1460-22-9-0 | | | | | |
| WHT/TAN | 22 | S-1460-22-9-10 | | | | | |
| RED/BLK | 18 | S-1460-18-2-0 | | | | | |
| RED/WHT | 18 | S-1460-18-2-9 | | | | | |
| YELLOW | 18 | S-1460-18-4 | | | SOLDER | | |
| BLK/WHT | 18 | S-1460-18-0-9 | | | S-1367-1-8 | | |
| RED/BLK | 18 | S-1460-18-2-0 | | SOLDER | S-1367-1-6 | 1270648 | |

WIRE TABLE

CESSNA AIRCRAFT CO COMMERCIAL AIRCRAFT DIVISION WICHITA, KANSAS

| | NAME | DATE |
|---|---|---|
| DRAWN | G WOOD | 5-14-63 |
| GROUP | [illegible] | 7-8-63 |
| CHECK | R. [illegible] | 7-1-63 |
| PROJ | H. McCabe | 7-8-63 |

TITLE: WIRING DIAGRAM — NARCO UGR-1A GLIDESLOPE WITH NARCO MARK 12 & VOA-5 (OPT)

Cessna.

DWG NO. 0770610

SUPERSEDED BY | SUPERSEDES 0770610 | MODEL | SHT 1 OF 1

| A | BY REV: 29753 WAS 29752; 29752 WAS 29753 | HJB 8-14-64 | RRS |
|---|---|---|---|

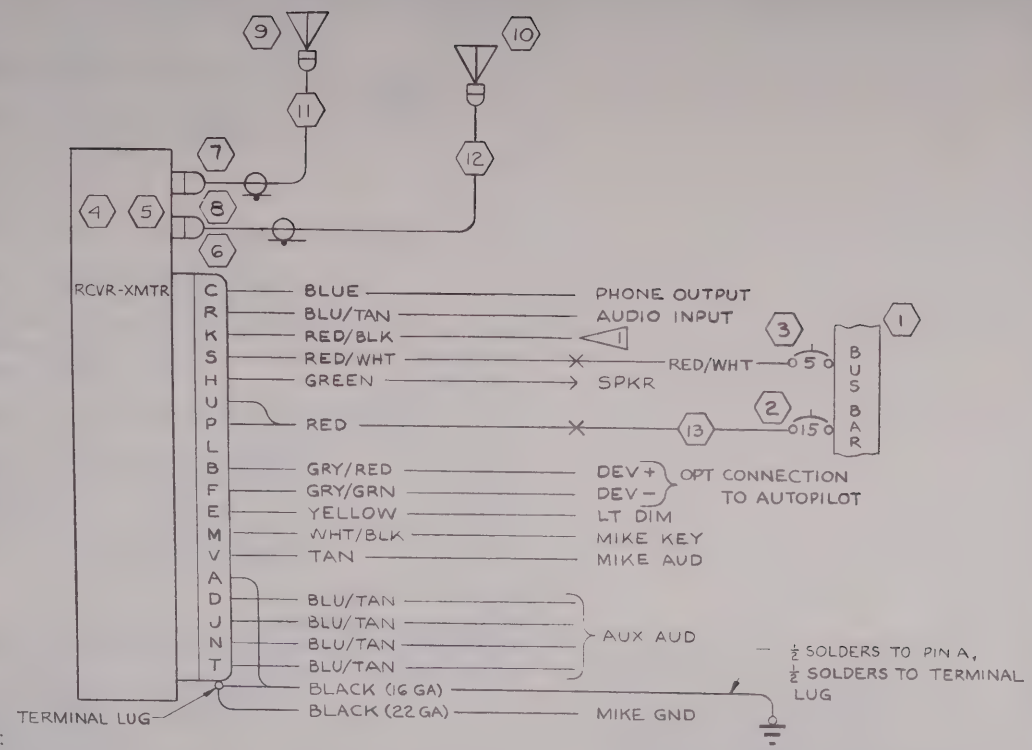


INACTIVE
SER 18255845 & ON
HJB 8-14-64 RRS

NOTES:

1. ON SINGLE CESSNA NAV/COM 300 INSTL, RED/BLK WIRE (PIN K) IS CONNECTED TO RED/WHT WIRE (PIN S) WITH AN S-1370-1 SPLICE, AND BLUE WIRE (PIN C) IS CONNECTED TO BLU/TAN WIRE (PIN R) WITH AN S-1370-1 SPLICE. WHEN THE NAV/COM 300 IS INSTALLED WITH OTHER RADIO UNITS, RED/WHT WIRE CONNECTS TO CKT BKR AS SHOWN & RED/BLK WIRE IS CUT OFF AT CONNECTOR; BLUE WIRE CONNECTS TO WIPER OF A SPKR-PHONE SWITCH & BLU/TAN WIRE CONNECTS TO SPKR TERMINAL OF SPKR-PHONE SWITCH.
2. WIRES NOT USED TO BE COVERED WITH VINYL SLEEVING & TIED INTO CABLE ASSY.
3. FOR DUAL 514A INSTALLATION, REF 0770610 PAGE 17.22.1

(SEE PAGE 17.22.1 FOR CONTINUATION OF NOTES)

| ITEM NO | PART NO. | DESCRIPTION | INSTALLED ON |
|---|---|---|---|
| 13 | RED | WIRE | |
| 12 | 0770033-129 | RF CABLE ASSY | |
| 11 | 0770033-127 | RF CABLE ASSY | |
| 10 | 0770625-12 | OMNI ANT. INSTL | |
| 9 | 0770625-16 | ANTENNA (ARC) | |
| 8 | 29752 | CONNECTOR (ARC) | |
| 7 | 29753 | CONNECTOR (ARC) | |
| 6 | 29747-0018 | CONNECTOR (ARC) | |
| 5 | 30410-1114 | RCVR-XMTR (360 CH) | (ARC) |
| 4 | 30410-1014 | RCVR-XMTR (100 CH) | (ARC) |
| 3 | S-1360-5 | CIRCUIT BREAKER | |
| 2 | S-1360-15 | CIRCUIT BREAKER | |
| 1 | 0713743-1 | BUS BAR | |

EQUIPMENT TABLE

| WIRE CODE NO | GA | MATERIAL | LG | TERMINALS | | N/A | SERIALS |
|---|---|---|---|---|---|---|---|
| RED/WHT | 18 | S-1460-18-2-9 | | S-1370-1 | S-1367-1-6 | 0770694 | |
| BLU/TAN | 22 | S-1460-22-6-10 | | SOLDER | | 0770695 | |
| BLU/TAN | 22 | S-1460-22-6-10 | | | | | |
| BLU/TAN | 22 | S-1460-22-6-10 | | | | | |
| BLACK | 16 | S-1460-16-0 | | | S-1367-2-8 | | |
| WHT/BLK | 22 | S-1460-22-9-0 | | | | | |
| GRY/GRN | 22 | S-1460-22-8-5 | | | | | |
| GRY/RED | 22 | S-1460-22-8-2 | | | | | |
| BLU/TAN | 22 | S-1460-22-6-10 | | | | | |
| BLU/TAN | 22 | S-1460-22-6-10 | | | | | |
| RED/WHT | 18 | S-1460-18-2-9 | | | | | |
| RED/BLK | 18 | S-1460-18-2-0 | | | | | |
| BLACK | 22 | S-1460-22-0 | | | | | |
| TAN | 22 | S-1460-22-10 | | | | | |
| BLUE | 22 | S-1460-22-6 | | | | | |
| RED | 16 | S-1460-16-2 | | | S-1370-2 | | |
| YELLOW | 18 | S-1460-18-4 | | | | | |
| GREEN | 20 | S-1460-20-5 | | SOLDER | S-341-2 | 0770695 | |

WIRE TABLE

CESSNA AIRCRAFT CO., COMMERCIAL AIRCRAFT DIVISION, WICHITA, KANSAS

| | NAME | DATE |
|---|---|---|
| DRAWN | G WOOD | 8-9-63 |
| GROUP | [illegible] | 8-8-63 |
| CHECK | R. [illegible] | 8-26-63 |
| PROJ | H. McCarter | 8-28-63 |

TITLE: WIRING DIAGRAM — CESSNA NAV/COM 300 (ARC TYPE 514A)

Cessna.

DWG NO. 0770610

SUPERSEDED BY 0770750 PAGE 2.7.1.0 | SUPERSEDES | MODEL 182 | REV A | PAGE 17.22

FORM NO. 80-161

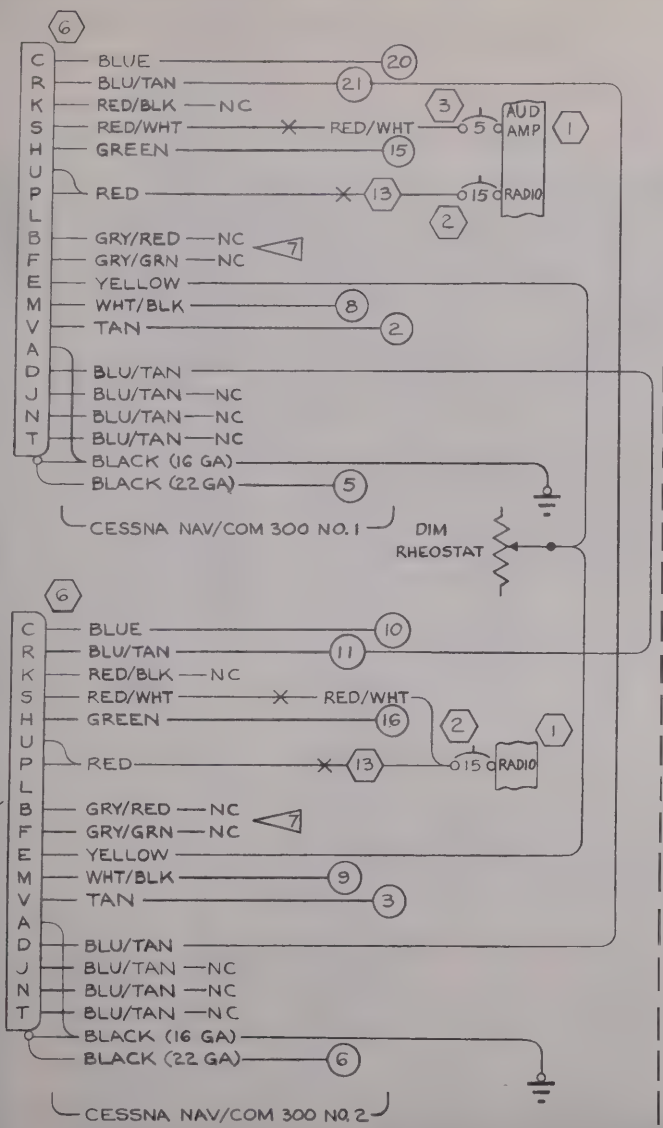


TYPICAL INTERCONNECTION OF DUAL CESSNA

(SR 4037-9)

NOTES CONTINUED:

4. CIRCLED NUMBERS ( ) REFER TO TERMINALS ON TRANSMITTER AND AUDIO SELECTOR SWITCH ASSY (REF 0770610 PAGE 17.17)
5. MIKE JACK IS GROUNDED AT RCVR-XMTR UNITS SO ON DUAL INSTALLATIONS MUTING RELAY WILL FUNCTION ONLY WHEN XMTR SEL SWITCH IS CORRECTLY POSITIONED. I. E. WHEN XMTR #2 IS SELECTED & THERE IS NO 2ND XMTR INSTALLED, AUDIO MUTING WILL NOT OCCUR.
6. CESSNA NAV/COM 300 AMPLIFIERS ARE OPERATED "ALWAYS HOT". SPEAKER OUTPUTS FROM EACH SYSTEM DRIVE EITHER A 5 OHM, 10 WATT DUMMY LOAD OR THE SHIP'S SPEAKER AS DETERMINED BY THE TRANSMITTER SELECTED (REF 0770610, PAGE 17.17)
7. WHEN AN OPTIONAL NAV-O-MATIC AUTOPILOT WITH OMNI COUPLER IS COMBINED WITH A CESSNA NAV/COM 300, THE GRY/RED WIRE CONNECTS TO DEV+ CIRCUIT & THE GRY/GRN WIRE CONNECTS TO DEV- CIRCUIT.

| CHG LET | REVISION | BY DATE | CHK APPD |
|---|---|---|---|
| | | | |

INACTIVE SER 18255645 ON HUB 8-14-64

| PART NO | DESCRIPTION | INSTALLED ON |
|---|---|---|
| | | |

| WIRE CODE NO | GA | MATERIAL | LG | TERMINALS | | SERIALS |
|---|---|---|---|---|---|---|
| | | | | | | |

WIRE TABLE

CESSNA AIRCRAFT CO., COMMERCIAL AIRCRAFT DIVISION, WICHITA, KANSAS

| | NAME | DATE |
|---|---|---|
| DRAWN | G WOOD | 8-27-63 |
| GROUP | | |
| CHECK | | 9-4-63 |
| PROJ | | 9-6-63 |

TITLE: WIRING DIAGRAM — CESSNA NAV/COM 300 (ARC TYPE 51HA)

Cessna.

DWG NO 0770610

NOTES:

1. GRY/RED WIRE IS "DEV +" CIRCUIT & GRY/GRN WIRE IS "DEV-" CIRCUIT FOR CONNECTION TO A VOR INDICATOR.
2. CONNECTORS REQUIRED FOR FABRICATING A COMPLETE SET OF INTERCONNECTING CABLES ARE INCLUDED IN ARC CONNECTOR KIT NO. 31682.
3. WING CABLE ASSY AND DIRECTIONAL GYRO CABLE ARE FOR REFERENCE ONLY THESE CABLES ARE IDENTICAL IN LENGTH AND COLOR CODING TO CABLES USED ON NAV-O-MATIC 300 INSTL.

| ITEM NO. | PART NO. | DESCRIPTION | INSTALLED ON |
|---|---|---|---|
| 21 | 1270449-4 | CABLE ASSY | |
| 20 | 1270449-2 | CABLE ASSY | |
| 19 | 0713743-1 | BUS BAR | |
| 18 | RED | WIRE | |
| 17 | S-1360-10 | CIRCUIT BREAKER | |
| 16 | R-12½-75-RS34 | RHEOSTAT (TRTA) | |
| 15 | YELLOW | WIRE | |
| 14 | 28371-0009 | CONNECTOR (ARC | <2 |
| 13 | 28505-0009 | CONNECTOR (ARC) | |
| 12 | 28326-0009 | CONNECTOR (ARC) | |
| 11 | 28326-0007 | CONNECTOR (ARC) | |
| 10 | 28326-0005 | CONNECTOR (ARC) | |
| 9 | 28371-0005 | CONNECTOR (ARC) | |
| 8 | 28371-0007 | CONNECTOR (ARC) | |
| 7 | 31683-0020 | CONNECTOR ASSY (ARC) | <2 |
| 6 | 30370-0100 | DIRECTIONAL GYRO | (ARC G-520A) |
| 5 | 26360-0000 | ROLL ACTUATOR | (ARC PA-510A) |
| 4 | 26360-0000 | PITCH ACTUATOR | (ARC PA-510A) |
| 3 | 30475-0000 | VERTICAL GYRO | (ARC G-519A) |
| 2 | 30520-0014 | COMPUTER (ARC) | (CA-520A) |
| 1 | 30510-1014 | CONTROL UNIT (ARC) | (C-520A) |

EQUIPMENT TABLE

| WIRE CODE NO. | GA | MATERIAL | LG | TERMINALS | | N/A | SERIALS |
|---|---|---|---|---|---|---|---|
| GRN/YEL | 20 | S-1460-20-5-4 | | SOLDER | S-1367-1-8 | 0770704 | |
| WHT/BLK | 22 | S-1460-22-9-0 | | | SOLDER | | |
| RED/BLK | 18 | S-1460-18-2-0 | | | | | |
| WHT/RED | 22 | S-1460-229-2 | | | | | |
| BLK/BLU | 22 | S-1460-22-0-6 | | | | | |
| WHT/YEL | 22 | S-1460-22-9-4 | | | | | |
| WHT/GRN | 22 | S-1460-22-9-5 | | | | | |
| WHT/BLU | 22 | S-1460-22-9-6 | | | | | |
| WHT/TAN | 22 | S-1460-22-9-10 | | | | | |
| RED/BLK | 18 | S-1460-18-2-0 | | | | | |
| WHT/RED | 22 | S-1460-22-9-2 | | | | | |
| WHT/BLU | 22 | S-1460-22-9-6 | | | | | |
| WHT/TAN | 22 | S-1460-22-9-10 | | | | | |
| WHT/YEL | 22 | S-1460-22-9-4 | | | | | |
| WHT/GRN | 22 | S-1460-22-9-5 | | SOLDER | SOLDER | 0770704 | |
| TAN/WHT | 22 | S-1460 22-10-9 | | SOLDER | SOLDER | 0770704 | |
| TAN/BLU | 22 | S-1460-22-10-6 | | | | | |
| TAN/YEL | 22 | S-1460-22-10-4 | | | | | |
| TAN/RED | 22 | S-1460-22-10-2 | | | SOLDER | | |
| YELLOW | 18 | S-1460-18-4 | | | S-1370-1 | | |
| RED | 16 | S-1460-16-2 | | | S-1370-2 | | |
| WHT/RED | 22 | S-1460-22-9-2 | | | SOLDER | | |
| BLU/TAN | 22 | S-1460-22-6-10 | | | | | |
| RED/WHT | 18 | S-1460-18-2-9 | | | | | |
| WHT/BLK | 22 | S-1460-22-9-0 | | | SOLDER | | |
| GRY/GRN | 22 | S-1460-22-8-5 | | | S-1370-1 | | |
| GRY/RED | 22 | S-1460-22-8-2 | | | S-1370-1 | | |
| BLU/WHT | 22 | S-1460-22-6-9 | | | SOLDER | | |
| RED/BLK | 18 | S-1460-18-2-0 | | | | | |
| TAN/WHT | 22 | S-1460-22-10-9 | | | | | |
| BLU/GRN | 22 | S-1460-22-6-5 | | | | | |
| TAN/BLU | 22 | S-1460-22-10-6 | | | | | |
| TAN/RED | 22 | S-1460-22-10-2 | | | | | |
| BLU/YEL | 22 | S-1460-22-6-4 | | | | | |
| TAN/YEL | 22 | S-1460-22-10-4 | | | | | |
| BLU/RED | 22 | S-1460-22-6-2 | | | | | |
| BLU/BLK | 22 | S-1460-22-6-0 | | | | | |
| TAN | 22 | S-1460-22-10 | | | | | |
| BLUE | 22 | S-1460-22-6 | | SOLDER | SOLDER | 0770704 | |

WIRE TABLE

CESSNA AIRCRAFT CO COMMERCIAL AIRCRAFT DIVISION WICHITA KANSAS

| | NAME | DATE |
|---|---|---|
| DRAWN | RIDDER | 9-5-63 |
| GROUP | | 9-10-63 |
| CHECK | R. Buck | 9-18-63 |
| PROJ | N. McCarter | 9-30-63 |

TITLE: WIRING DIAGRAM — NAV-O-MATIC 400 SYSTEM (OPT)

Cessna.

DWG NO. 0770610

| SUPERSEDED BY | SUPERSEDES | MODEL: | REV: | PAGE: |
|---|---|---|---|---|
| | | 182 | | 17.23 |

FORM NO. 80-161

(SR4338)

| CHG LET | ZONE | REVISION | BY / DATE | CHK / APPD |
|---|---|---|---|---|
| | | | | |

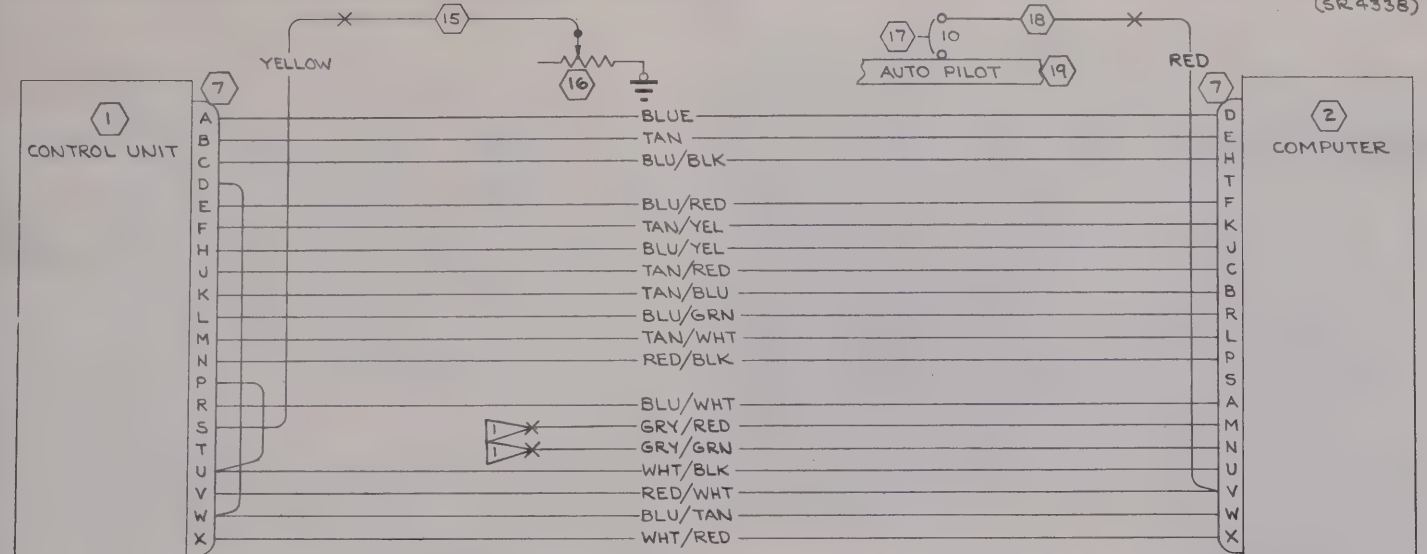


CESSNA AIRCRAFT CO., COMMERCIAL AIRCRAFT DIVISION, WICHITA, KANSAS

| | NAME | DATE |
|---|---|---|
| DRAWN | RIDDER | 9-5-63 |
| GROUP | | |
| CHECK | R. Stuck | 9-6-63 |
| PROJ | N. McCoy | 9-30-63 |

TITLE: WIRING DIAGRAM — NAV-O-MATIC 400 SYSTEM (OPT)

Cessna.

DWG NO 0770610

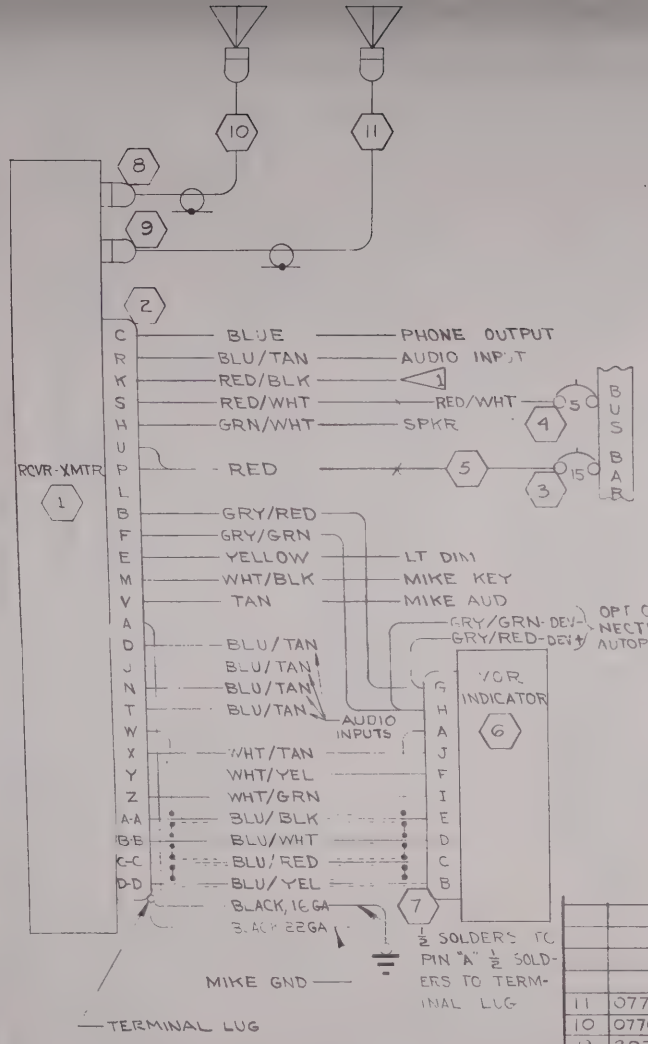


1. ON SINGLE NAV/COM 300R INSTL, RED/BLK WIRE (PIN K) IS CONNECTED TO RED/WHT WIRE (PIN S) WITH AN S-1370-1 SPLICE AND BLUE WIRE (PIN C) IS CONNECTED TO BLU/TAN WIRE (PIN R) D, J, N, OR T) WITH AN S-1370-1 SPLICE. WHEN THE NAV/COM 300R IS INSTALLED WITH OTHER RADIO UNITS, RED/WHT WIRE CONNECTS TO CKT BKR AS SHOWN & RED/BLK WIRE IS CUT OFF AT CONNECTOR; BLUE WIRE CONNECTS TO WIPER OF A SPKR-PHONE SWITCH & BLU/TAN WIRE CONNECTS TO SPKR TERMINAL OF SPKR-PHONE SWITCH.
2. WIRES NOT USED TO BE COVERED WITH VINYL SLEEVING & TIED INTO CABLE ASSY.
3. FOR DUAL 51 4R INSTALLATION, REF 0770610 PAGE 17.24.1
4. WIRE MATERIAL PER S-146C EXCEPT SHIELDED WIRES PER S-1961.

| REV | BY | DATE | APPD |
|---|---|---|---|
| A | REV. 32580-1314 WAS -1114. | HJB 8-14-64 | |

INACTIVE SER 18255845 & ON HJB 8-14-64

| WIRE CODE NO | GA | MATERIAL | LG | TERMINALS | | | SERIALS |
|---|---|---|---|---|---|---|---|
| RED/WHT | 18 | -18-2-9 | | S-1367-6 | | 0770716 | |
| BLU/YEL | 22S | -22-6-4 | | SOLDER | SOLDER | | |
| BLU/RED | 22S | -22-6-2 | | | | | |
| BLU/WHT | 22S | -22-6-9 | | | | | |
| BLU/BLK | 22S | -22-6-0 | | | | | |
| WHT/GRN | 22 | -22-9-5 | | | | | |
| WHT/YEL | 22 | -22-9-4 | | | | | |
| WHT/TAN | 22 | -22-9-10 | | | SOLDER | | |
| BLACK | 16 | -16-0 | | | S-3672B | | |
| WHT/BLK | 22 | -22-9-0 | | | | | |
| GRY/GRN | 22 | -22-8-5 | | | | | |
| GRY/GRN | 22 | -22-8-5 | | | SOLDER | | |
| GRY/RED | 22 | -22-8-2 | | | | | |
| GRY/RED | 22 | -22-8-2 | | | SOLDER | | |
| BLU/TAN | 22 | -22-6-0 | | | | | |
| BLU/TAN | 22 | -22-6-0 | | | | | |
| BLU TAN | 22 | -22-6-10 | | | | | |
| BLU/TAN | 22 | -22-6-10 | | | | | |
| BLU/TAN | 22 | -22-6-10 | | | | | |
| RED/WHT | 18 | -18-2-9 | | | S-1370-1 | | |
| RED/BLK | 18 | -18-2-0 | | | | | |
| BLACK | 22 | -22-0 | | | | | |
| TAN | 22 | -22-10 | | | | | |
| BLUE | 22 | -22-6 | | | | | |
| RED | 16 | -16-2 | | | S-370-2 | | |
| YELLOW | 18 | 18-4 | | | | | |
| GRN/WHT | 20 | -20-5-9 | | SOLDER | | 770716 | |
| | | | | | | N/A | |

4 WIRE TABLE

| ITEM NO | PART NO | DESCRIPTION | INSTALLED ON |
|---|---|---|---|
| 11 | 0770033-129 | RF CABLE ASSY | |
| 10 | 0770033-127 | RF CABLE ASSY | |
| 9 | 29752 | CONNECTOR (ARC) | |
| 8 | 29753 | CONNECTOR (ARC) | |
| 7 | 32604 | CONNECTOR (ARC) | |
| 6 | 31690 | IN-514R INDICATOR (ARC) | |
| 5 | RED | WIRE | |
| 4 | S-1360-5 | CIRCUIT BREAKER | |
| 3 | S-1360-15 | CIRCUIT BREAKER | |
| 2 | 29747-0026 | CONNECTOR (ARC) | |
| 1 | 32580-1314 | RCVR/XMTR (360 CH) | |

EQUIPMENT TABLE

CESSNA AIRCRAFT CO., COMMERCIAL AIRCRAFT DIVISION, WICHITA, KANSAS

| | NAME | DATE |
|---|---|---|
| DRAWN | G WOOD | 3-6-64 |
| GROUP | | 4-7-64 |
| CHECK | | 4-8-64 |
| PROJ | | 4-7-64 |

TITLE: WIRING DIAGRAM — CESSNA NAV/COM 300R (ARC TYPE 514R)

Cessna.

DWG NO 0770610

| SUPERSEDED BY | PAGE | SUPERSEDES | MODEL | REV | PAGE |
|---|---|---|---|---|---|
| 770750 | 2.3.1.0 | | 182 | A | 17.24 |

FORM NO 80-161

# TABLE OF CONTENTS

| GE NO. | TITLE | DATE ISSUED | REV |
|---|---|---|---|
| | **1965 SERIALS 18255845 & ON** | | |
| 0.1. | Radio Audio, Power & Lighting | 6-28-65 | A |
| 3.1.0 | Wiring Diagram - Cessna Nav/Com 300R (ARC Type 514R & 515R) | 6-15-65 | A |
| 3.1.1 | Wiring Diagram - Cessna Nav/Com 300R (ARC Type 514R) | 6-15-65 | A |
| 4.1 | Wiring Diagram - Cessna Marker Beacon 300 (ARC Type 502B) | | |
| 6.1 | Wiring Diagram - Audio Selector Switches | | |
| 6.2 | W. D. -Omni Switch, Terminal Block & Muting Relay | | |
| 6.3 | Wiring Diagram XMTR Selector Switch | | |
| 6.4 | Typical Switching - Narco Mark 12 & ADF | 1-28-64 | |
| 6.5 | W. D. -Typical Switching-Partial "A", ISO AMP & ADF; HF Transceiver & Comm 300 | 6-15-65 | A |
| 6.6 | Transmitter Selector Switch & Terminal Block | 12-9-65 | |
| 7.1.0 | W. D. -Cessna Nav/Com 300 & Cessna Trans. 300 (ARC 514A) | 6-15-65 | Inac. |
| 7.1.1 | W. D. -Cessna Nav/Com 300 & Cessna Trans. 300 (ARC 514A) | 6-15-65 | Inac. |
| 7.2 | Cessna Com 300 (ARC Type 524A) | 8-21-64 | |
| 8.1 | Wiring Diagram - Cessna Nav/Omni 300 (ARC Type 525A) | 12-7-64 | A |
| 10.1 | Cessna Transceiver 500 (ARC Type 302G) | 8-21-64 | |
| 12 | Wiring Diagram - Cessna ADF 300 (Type 521B) | 10-16-65 | A |
| 13.1.1 | Cessna Nav/Omni 500 (ARC Type 319G) | 9-9-64 | |
| 14.1.1 | Wiring Diagram - Cessna Nav/Comm 500 (ARC Type 317G) | 9-2-64 | |
| 15.1 | Wiring Diagram - Cessna ADF 500 (ARC Type 318G) | 5-22-65 | B Inac. |
| 18.1.2 | Pantronics DX10-D HF Transceiver Installation | 11-19-64 | |
| 18.1.3 | Pantronics DX10-D HF Transceiver Installation | 11-19-64 | |
| 19 | King KA-10 Amplifier | 12-9-65 | |
| 20.1 | King KN-60 DME | 11-19-64 | |
| 21.1 | Wiring Diagram - Pantronics DX10-DA | 10-27-65 | C |
| 21.2 | Wiring Diagram - Pantronics DX10-DA | 4-27-65 | A |
| 21.3 | Wiring Diagram - Pantronics DX10-DA | 10-27-65 | C |
| 21.4 | Wiring Diagram - Pantronics DX10-DA | 10-27-65 | C |
| 24.1 | King KX-150A or KX-150AE | 2-25-65 | A |
| 25.1 | Wiring Diagram - Narco Mark 12 With VOA-4, VOA-5 or VOA-6 | 1-21-65 | |
| 26.1 | Narco UGR-1A Glideslope with Narco Mark 12 & VOA-5 | 1-12-65 | |
| 27.1 | Wiring Diagram - King KY-95E | 1-28-65 | |
| 29.1 | Cessna ADF 500 (Goniometer) (ARC Type 318G) | 10-16-65 | A |

# TABLE OF CONTENTS


| PAGE NO. | TITLE | DATE ISSUED | R |
|---|---|---|---|
| 2.30.1 | Mkr. Bcn. Cessna Nav/Omni 300 (ARC Type 525A) | 5-27-65 | |
| 2.31.1.0 | Cessna Nav/Comm 300 (ARC Type 516A) | 6-15-65 | |
| 2.31.1.1 | Cessna Nav/Com 300 (ARC Type 516A) | 6-15-65 | |
| 2.32 | Auxiliary Microphone Jack & Control Wheel Key | 7-7-65 | |
| 2.34.1 | King KX-160E Nav/Com | 7-19-65 | |
| 2.35 | W.D. Bendix ADF-T-12B | 8-13-65 | |
| 2.36.1 | W.D. -King KA-25C Audio Amplifier | 12-9-65 | |
| | DRAWING NUMBER 0770610 | | |
| 17.7 | Nav-O-Matic 200 & 300 System (Opt.) | 5-27-63 | In |
| 17.7.1 | Nav-O-Matic 200 & 300 Systems (Opt.) | 11-18-64 | A |
| 17.23 | Nav-O-Matic 400 System (Opt.) | 10-2-63 | |
| 17.23.1 | Nav-O-Matic 400 System (Opt.) | 10-2-63 | |

NOTE:

1. WIRES TO BE OF SUFFICIENT LENGTH TO ALLOW CONNECTION TO ALL POSSIBLE RADIO COMBINATIONS. TERMINALS TO BE ATTACHED TO WIRES AS REQD BY THE VARIOUS RADIO INSTALLATIONS.
2. WIRE MATERIAL PER S-1460.
3. S-1635-1 PIN & S-1637-1 HOUSING-CAP.

| LET | | DATE | APPD |
|---|---|---|---|
| A | ADDED DETAIL "A" & GREEN WIRE INACTIVATED GRN, BLK & GRN WIRES (SR4839) | WJR 6-9-65 | RRS/JMM NMC HW |

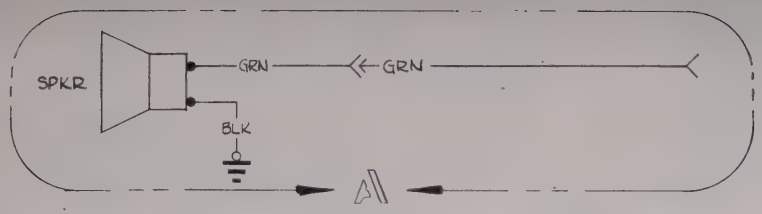


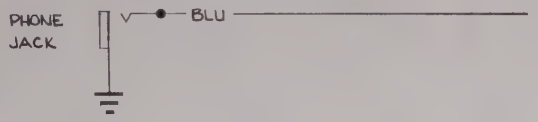


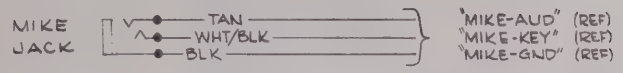

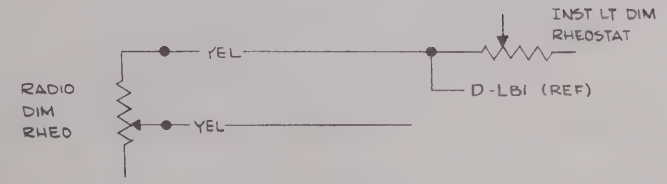


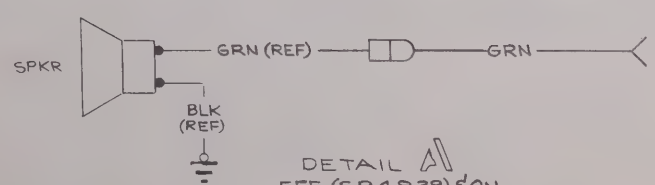


DETAIL A
EFF (SR4839) & ON

| WIRE CODE NO. | GA | MATERIAL | LG | TERMINALS | | | SERIALS |
|---|---|---|---|---|---|---|---|
| BLACK | 22 | -22-0 | 8 | SOLDER | S-1367-1-8 | | INACTIVE (SR4839) & ON |
| GREEN | 20 | -20-5 | 8 | SOLDER | S-341-2 | | INACTIVE (SR4839) & ON |
| RED | 16 | -16-2 | 60 | 1 | S-1367-2-6 | | |
| YELLOW | 18 | -18-4 | 51 | 1 | SOLDER | | |
| YELLOW | 18 | -18-4 | | SOLDER | SOLDER | | |
| GREEN | 20 | -20-5 | 163 | S-341-2 | 3 | | (SR4839) & ON |
| BLACK | 22 | -22-0 | 90 | 1 | SOLDER | | |
| WHT/BLK | 22 | -22-9-0 | 90 | 1 | SOLDER | | |
| TAN | 22 | -22-10 | 90 | 1 | SOLDER | | |
| BLUE | 22 | -22-6 | 55 | 1 | SOLDER | | |
| GREEN | 20 | -20-5 | 163 | S-341-2 | S-341-2 | | INACTIVE (SR4839) & ON |

2 WIRE TABLE

| ITEM NO | PART NO. | DESCRIPTION | INSTALLED ON |
|---|---|---|---|

EQUIPMENT TABLE

CESSNA AIRCRAFT CO., COMMERCIAL AIRCRAFT DIVISION, WICHITA, KANSAS

| | NAME | DATE |
|---|---|---|
| DRAWN | BALES | 7-2-64 |
| GROUP | [illegible] | 7-9-64 |
| CHECK | [illegible] | 7-6-64 |
| PROJ | H. McCarter | 7-10-64 |

TITLE: WIRING DIAGRAM — RADIO SPEAKER, 'PHONE JACK, MIKE, LIGHT RHEO. & POWER CIRCUITS

Cessna.

DWG NO. 0770750

SUPERSEDED BY | SUPERSEDES | MODEL: 182 | REV: A | PAGE: 2.0.1

FORM NO. 80-161

(SR4451)

| CHG LET | REVISION | BY DATE | CHK APPD |
|---|---|---|---|
| A | ADD ARC TYPE 515R TO TITLE. IN NOTE 3, 300R WAS 514R (SR4812.) | GLW 5-13-65 | RES HWC HWJ |

NOTES:

1. ON SINGLE NAV/COM 300R INSTL, RED/BLK WIRE (PIN K) IS CONNECTED TO RED/WHT WIRE (PIN S) WITH AN S-1370-1 SPLICE AND BLUE WIRE (PIN C) IS CONNECTED TO BLU/TAN WIRE (PIN R, D, J, N, OR T) WITH AN S-1370-1 SPLICE. WHEN THE NAV/COM 300R IS INSTALLED WITH OTHER RADIO UNITS, RED/WHT WIRE CONNECTS TO CKT BKR AS SHOWN & RED/BLK WIRE IS CUT OFF AT CONNECTOR; BLUE WIRE CONNECTS TO WIPER OF A SPKR-PHONE SWITCH & BLU/TAN WIRE CONNECTS TO SPKR TERMINAL OF SPKR-PHONE SWITCH.
2. S-1557-1 CAP REPLACED WITH S-1367-1-8 TERMINAL WHEN COMBINED WITH OTHER RADIOS.
3. FOR DUAL 300R INSTALLATION, REF PAGE 2.3.1.1.
4. WIRE MATERIAL PER S-1460 EXCEPT AS NOTED.

(NOTES CONT. ON 2.3.1.1)

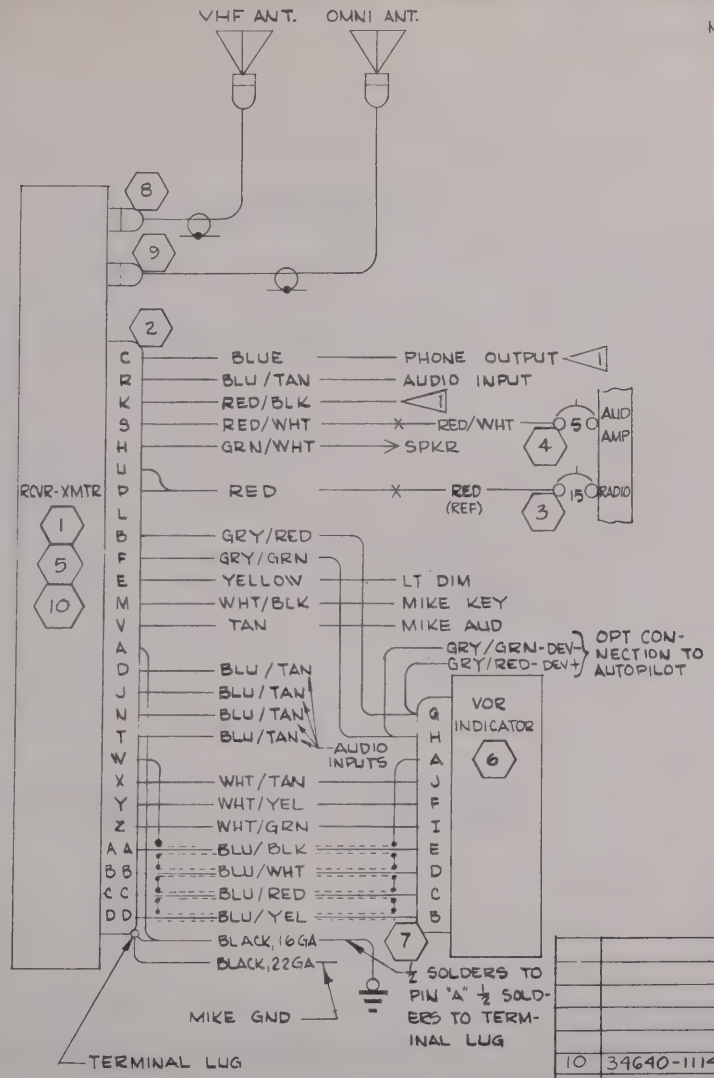


| | | | |
|---|---|---|---|
| 10 | 34640-1114 | RCVR/XMTR (ARC) | |
| 9 | 29752 | CONNECTOR (ARC) | |
| 8 | 29753 | CONNECTOR (ARC) | |
| 7 | 32604 | CONNECTOR (ARC) | |
| 6 | 31640 | INDICATOR (ARC) | |
| 5 | 32580-1614 | RCVR/XMTR 360 CH EXP | (ARC) |
| 4 | S-1360-5 | CIRCUIT BREAKER | |
| 3 | S-1360-15 | CIRCUIT BREAKER | |
| 2 | 29747-0026 | CONNECTOR (ARC) | |
| 1 | 32580-1114 | RCVR/XMTR (360 CH) | (ARC) |
| | PART NO. | DESCRIPTION | INSTALLED ON |

| WIRE CODE NO. | GA | MATERIAL | LG | TERMINALS | | | SERIALS |
|---|---|---|---|---|---|---|---|
| RED/WHT | 18 | -18-2-9 | | S-1367-1-6 | | | |
| BLU/YEL | 22S | S-1461-22-6-4 | | SOLDER | SOLDER | | |
| BLU/RED | 22S | S-1461-22-6-2 | | | | | |
| BLU/WHT | 22S | S-1461-22-6-9 | | | | | |
| BLU/BLK | 22S | S-1461-22-6-0 | | | | | |
| WHT/GRN | 22 | -22-9-5 | | | | | |
| WHT/YEL | 22 | -22-9-4 | | | | | |
| WHT/TAN | 22 | -22-9-10 | | | SOLDER | | |
| BLACK | 16 | -16-0 | | | S-1367-2-8 | | |
| WHT/BLK | 22 | -22-9-0 | | | | | |
| GRY/GRN | 22 | -22-8-5 | | | S-1557-1 | | |
| GRY/GRN | 22 | -22-8-5 | | | SOLDER | | |
| GRY/RED | 22 | -22-8-2 | | | S-1557-1 | | |
| GRY/RED | 22 | -22-8-2 | | | SOLDER | | |
| BLU/TAN | 22 | -22-6-10 | | | S-1557-1 | 2 | |
| BLU/TAN | 22 | -22-6-10 | | | | 2 | |
| BLU/TAN | 22 | -22-6-10 | | | | 2 | |
| BLU/TAN | 22 | -22-6-10 | | | | 2 | |
| BLU/TAN | 22 | -22-6-10 | | | S-1557-1 | 2 | |
| RED/WHT | 18 | -18-2-9 | | | S-1370-1 | | |
| RED/BLK | 18 | -18-2-0 | | | | | |
| BLACK | 22 | -22-0 | | | | | |
| TAN | 22 | -22-10 | | | | | |
| BLUE | 22 | -22-6 | | | | | |
| RED | 16 | -16-2 | | | S-1370-2 | | |
| YELLOW | 18 | -18-4 | | | | | |
| GRN/WHT | 20 | -20-5-9 | | SOLDER | S-341-2 | | |

4 WIRE TABLE

CESSNA AIRCRAFT CO., COMMERCIAL AIRCRAFT DIVISION, WICHITA, KANSAS

| | NAME | DATE |
|---|---|---|
| DRAWN | BALES | 7-2-64 |
| GROUP | R.E. MOORE | 8-15-64 |
| CHECK | R. Stirk | 8-15-64 |
| PROJ | H. Weiss | 8-20-64 |

TITLE: WIRING DIAGRAM — CESSNA NAV/COM 300R (ARC TYPE 514R) (ARC TYPE 515R)

Cessna.

DWG NO. 0770750

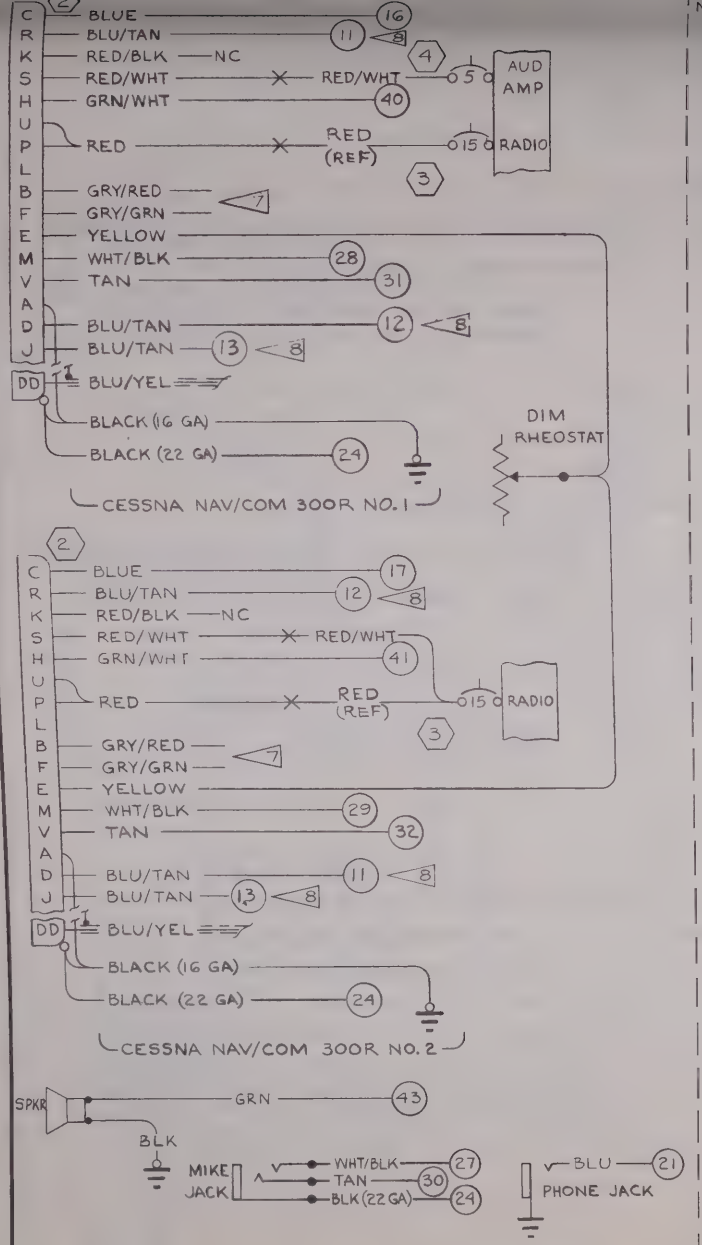


TYPICAL INTERCONNECTION OF DUAL CESSNA NAV/COM 300R SYSTEMS

NOTES CONTINUED:

5. CIRCLED NUMBERS (◯) REFER TO TERMINALS ON TERMINAL BOARD ASSY REF PAGES 2.6.1, 2.6.2, 2.6.3.
6. CESSNA NAV/COM 300R AMPLIFIERS ARE OPERATED "ALWAYS HOT". SPEAKER OUTPUTS FROM EACH SYSTEM DRIVE EITHER A 5 OHM, 10 WATT DUMMY LOAD OR THE SHIP'S SPEAKER AS DETERMINED BY THE TRANSMITTER SELECTED (REF PAGE 2.6.3)
7. WHEN AN OPTIONAL NAV-O-MATIC AUTOPILOT WITH OMNI COUPLER IS COMBINED WITH A CESSNA NAV/COM 300R, THE GRY/RED WIRE CONNECTS TO DEV + CIRCUIT & THE GRY/GRN WIRE CONNECTS TO DEV - CIRCUIT.
8. THE (5) BLU/TAN WIRES (ISO AMP INPUTS) FROM EACH NAV/COM SET TO BE CONNECTED TO TERMINALS 11 THRU 15 ON TERMINAL BOARD IN ANY SEQUENCE. CAUTION: DO NOT CONNECT (2) BLU/TAN WIRES FROM SAME SET TO SAME TERMINAL!

| LET | REVISION | DATE | APPD |
|---|---|---|---|
| | SEE PAGE 2.3.1.0 | | |

| WIRE CODE NO. | GA | MATERIAL | LG | TERMINALS | | SERIALS |
|---|---|---|---|---|---|---|
| | | | | | | |

WIRE TABLE

| ITEM NO | PART NO. | DESCRIPTION | INSTALLED ON |
|---|---|---|---|
| | | | |

EQUIPMENT TABLE

CESSNA AIRCRAFT CO. COMMERCIAL AIRCRAFT DIVISION, WICHITA, KANSAS

| | NAME | DATE |
|---|---|---|
| DRAWN | G WOOD | 3-10-64 |
| GROUP | | 7-9-64 |
| CHECK | | 7-1-64 |
| PROJ | W. McCarter | 7-10-64 |

TITLE: WIRING DIAGRAM — CESSNA NAV/COM 300R (ARC TYPE 514R) (ARC TYPE 515R)

Cessna.

DWG NO. 0770750

| SUPERSEDED BY | SUPERSEDES | MODEL: | REV: | PAGE: |
|---|---|---|---|---|
| | | 182 | A | 2.3.1.1 |

FORM NO. 80-161

(SR 4451)

| CHG LET | REVISION | BY / DATE | CHK / APPD |
|---|---|---|---|
| | | | |

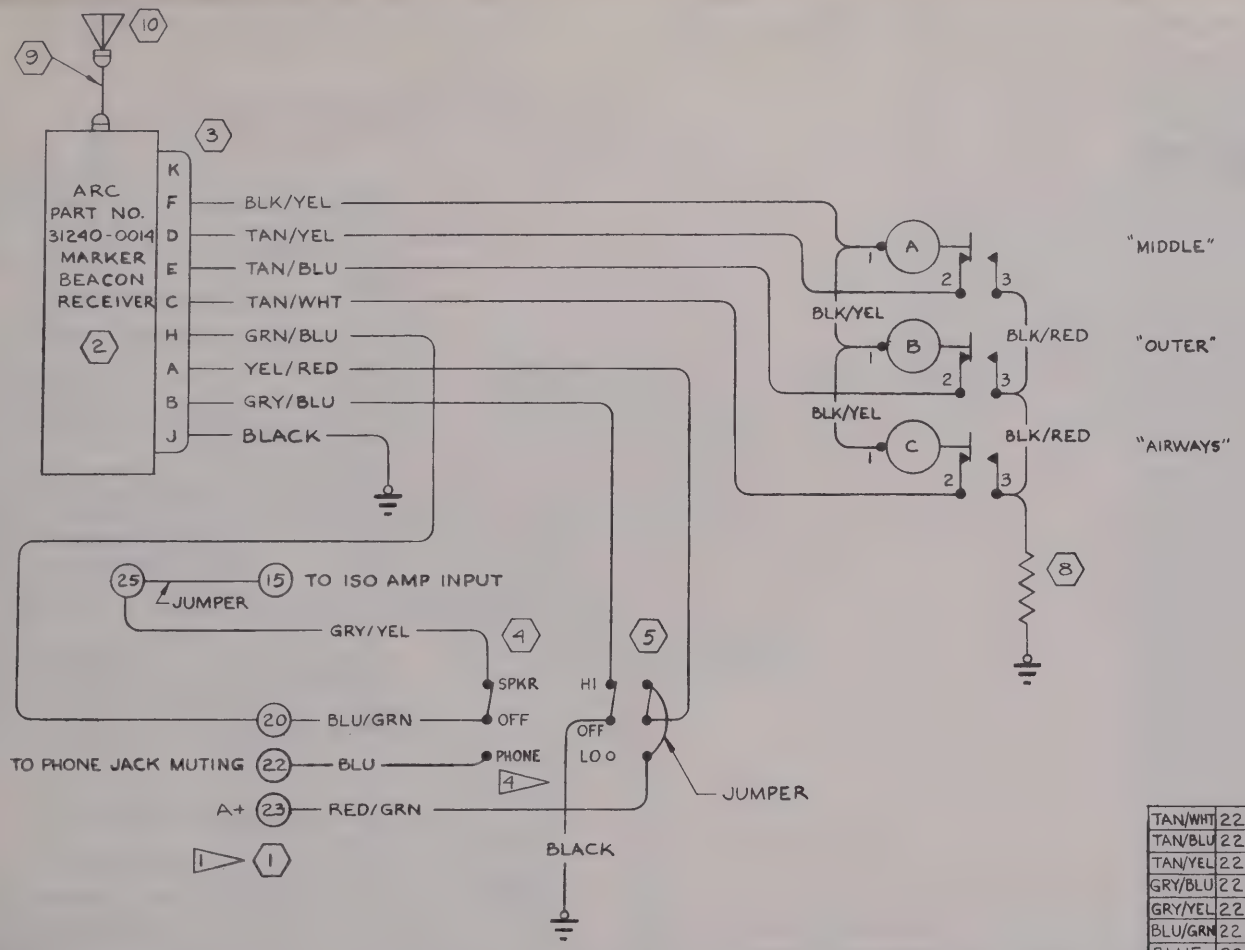


NOTES:

1. NUMBERS IN CIRCLES ARE NUMBERS ON 0770714-1 TERMINAL BLOCK ASSY.
2. WIRE MATERIAL PER S-1460.
3. TERMINAL BLOCK NUMBERS TO BE STAMPED ON WIRE PER CES-1015.
4. "PHONE" & "LO" FUNCTION TO BE ON KEYWAY SIDE OF SWITCH.

| WIRE CODE NO. | GA | MATERIAL | LG | TERMINALS | | SERIALS |
|---|---|---|---|---|---|---|
| TAN/WHT | 22 | -22-10-9 | | SOLDER | SOLDER | |
| TAN/BLU | 22 | -22-10-6 | | | SOLDER | |
| TAN/YEL | 22 | -22-10-4 | | | SOLDER | |
| GRY/BLU | 22 | -22-8-6 | | | SOLDER | |
| GRY/YEL | 22 | -22-8-4 | | | S-1367-1-8 | |
| BLU/GRN | 22 | -22-6-5 | | | S-1367-1-8 | |
| BLUE | 22 | -22-6 | | | S-1367-1-8 | |
| GRN/BLU | 20 | -20-5-6 | | | SOLDER | |
| YEL/RED | 20 | -20-4-2 | | | SOLDER | |
| RED/GRN | 20 | -20-2-5 | | | S-1367-1-8 | |
| BLACK | 22 | -22-0 | | | S-1367-1-8 | |
| BLACK | 22 | -22-0 | | | S-1367-1-8 | |
| BLK/YEL | 22 | -22-0-4 | | SOLDER | SOLDER | |

2 WIRE TABLE

| PART NO. | DESCRIPTION | INSTALLED ON |
|---|---|---|
| 10 | -611 | MARKER BCN ANT. | |
| 9 | -205 | CABLE ASSY | |
| 8 | 40Ω, 3 WATT | RESISTOR (OM) | |
| 7 | | | |
| 6 | | | |
| 5 | MST-205P | SWITCH (AELM) | |
| 4 | MST-105E | SWITCH (AELM) | |
| 3 | 28371-009 | PLUG (ARC) | |
| 2 | 31240-0014 | MKR BCN RCVR | (ARC) |
| 1 | 0770714-1 | TERM. BLOCK ASSY | |

CESSNA AIRCRAFT CO. COMMERCIAL AIRCRAFT DIVISION WICHITA KANSAS

| | NAME | DATE |
|---|---|---|
| DRAWN | G WOOD | 2-25-64 |
| GROUP | | 7-9-64 |
| CHECK | R. Stuck | 7-6-64 |
| PROJ | N. McGuire | 7-10-64 |

TITLE: WIRING DIAGRAM — CESSNA MARKER BEACON 300 (OPT) (ARC TYPE 502B)

Cessna.

DWG NO 0770750

(SR 4451)

| CHG LET | REVISION | BY DATE | CHK APPD |
|---|---|---|---|
| | | | |

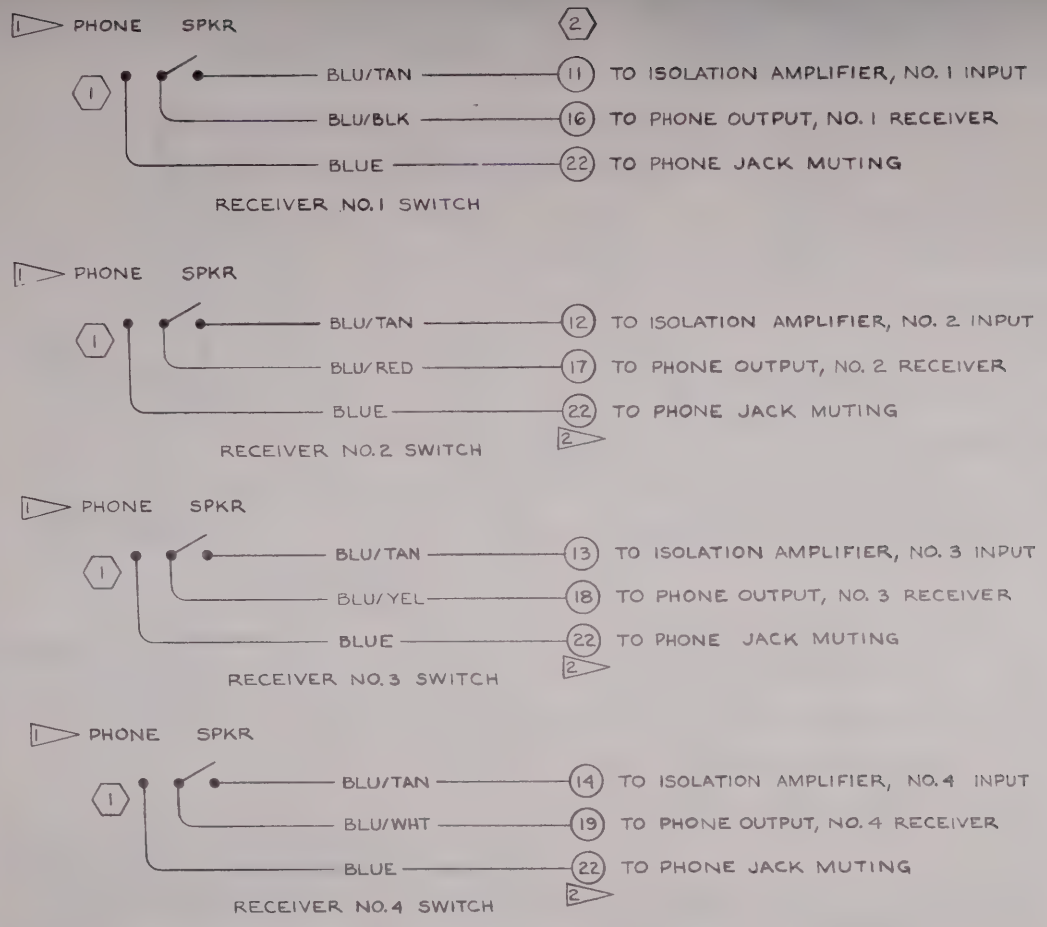


NOTES:
1. "PHONE" FUNCTION ON KEYWAY SIDE OF SWITCH.
2. PHONE TERMINALS TO BE JUMPERED TO ADJACENT AUDIO SWITCH PHONE TERMINAL INSTEAD OF BEING ROUTED TO TERMINAL BLOCK WHEN 2 OR MORE AUD SWITCHES ARE INSTL.
3. WIRE MATERIAL PER S-1460.
4. TERMINAL BLOCK NUMBERS TO BE STAMPED ON WIRE PER CES-1015.

| ITEM NO | PART NO. | DESCRIPTION | INSTALLED ON |
|---|---|---|---|
| 2 | 0770714-1 | TERM. BLOCK ASSY | |
| 1 | MST-105D | SWITCH (AELM) | |

EQUIPMENT TABLE

| WIRE CODE NO | GA | MATERIAL | LG | TERMINALS | | SERIALS |
|---|---|---|---|---|---|---|
| BLU/TAN | 22 | -22-6-10 | | SOLDER | S-1367-1-8 | |
| BLU/TAN | 22 | -22-6-10 | | | | |
| BLU/TAN | 22 | -22-6-10 | | | | |
| BLU/TAN | 22 | -22-6-10 | | | | |
| BLU/WHT | 22 | -22-6-9 | | | | |
| BLU/YEL | 22 | -22-6-4 | | | | |
| BLU/RED | 22 | -22-6-2 | | | | |
| BLU/BLK | 22 | 22-6-0 | | | | |
| BLUE | 22 | -22-6 | | | | |
| BLUE | 22 | -22-6 | | | | |
| BLUE | 22 | -22-6 | | | | |
| BLUE | 22 | -22-6 | | SOLDER | S-1367-1-8 | |

3 WIRE TABLE

CESSNA AIRCRAFT CO., COMMERCIAL AIRCRAFT DIVISION, WICHITA, KANSAS

| | NAME | DATE |
|---|---|---|
| DRAWN | G WOOD | 2-21-64 |
| GROUP | [illegible] | 7-9-64 |
| CHECK | [illegible] | 7-6-64 |
| PROJ | N. McCarter | 7-10-64 |

TITLE: WIRING DIAGRAM — AUDIO SELECTOR SWITCHES

Cessna.

DWG NO. 0770750

| SUPERSEDED BY | SUPERSEDES | MODEL | REV | PAGE |
|---|---|---|---|---|
| | | 182 | | 2.6.1 |

FORM NO. 80-161

(SR 4451)

| CHG LET | REVISION | BY DATE | CHK APPD |
|---|---|---|---|
| | | | |

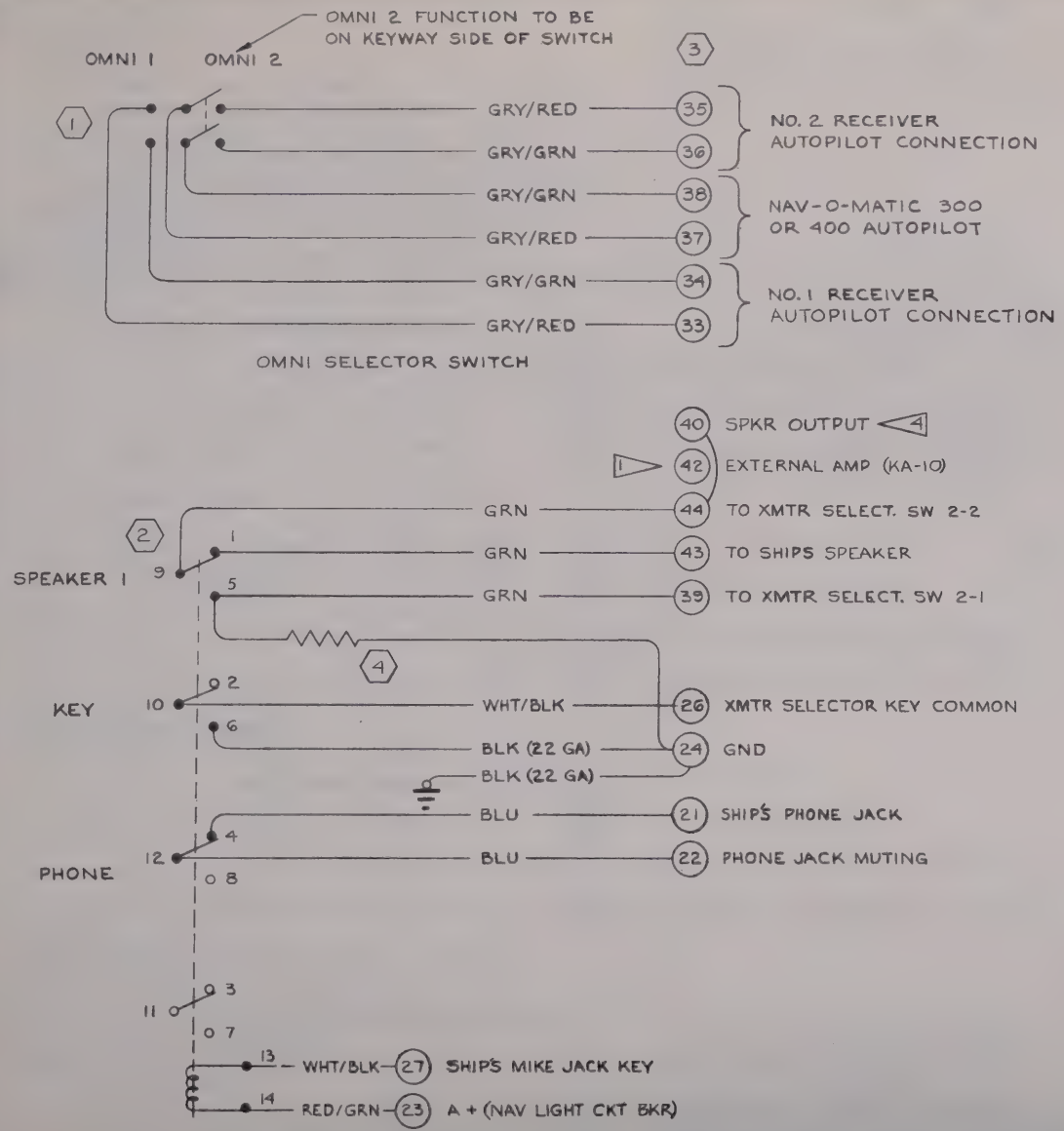


NOTES:

1. JUMPER BETWEEN (42) & (44) TO COMPLETE CIRCUIT FOR KA-10 AMPLIFIER.
2. WIRE MATL PER S-1460.
3. TERMINAL BLOCK NUMBERS TO BE STAMPED ON WIRE PER CES-1015.
4. WHEN A SINGLE TRANSCEIVER IS INSTALLED WITH ANY RECEIVING UNIT, THE SPKR OUTPUT OF THE TRANSCEIVER CONNECTS TO TERMINAL (40) & A JUMPER IS REQD BETWEEN (40) & (44). JUMPERS ARE ALSO REQD BETWEEN (26) & (28) FOR MIKE KEYING, AND AND BETWEEN (30) & (31) FOR MIKE AUDIO.

| WIRE CODE NO | GA | MATERIAL | LG | TERMINALS | | SERIALS |
|---|---|---|---|---|---|---|
| BLACK | 22 | -22-0 | | S-1367-1-8 | S-1367-1-8 | |
| WHT/BLK | 22 | -22-9-0 | | SOLDER | S-1367-1-8 | |
| WHT/BLK | 22 | -22-9-0 | | | | |
| GRY/RED | 22 | -22-8-2 | | | | |
| GRY/RED | 22 | -22-8-2 | | | | |
| GRY/RED | 22 | -22-8-2 | | | | |
| GRY/GRN | 22 | -22-8-5 | | | | |
| GRY/GRN | 22 | -22-8-5 | | | | |
| GRY/GRN | 22 | -22-8-5 | | | | |
| BLUE | 22 | -22-6 | | | | |
| BLUE | 22 | -22-6 | | | | |
| GRN | 20 | -20-5 | | | | |
| GRN | 20 | -20-5 | | | | |
| GRN | 20 | -20-5 | | | | |
| BLACK | 22 | -22-0 | | | | |
| RED/GRN | 20 | -20-2-5 | | SOLDER | S-1367-1-8 | |

2 WIRE TABLE

| | PART NO. | DESCRIPTION | INSTALLED ON |
|---|---|---|---|
| 4 | 5 OHM 10 WATT AXIAL LEAD | RESISTOR (OM) | |
| 3 | 0770714-1 | TERM. BLOCK ASSY | |
| 2 | KHP17D11 | RELAY (PBR) | |
| 1 | MST-205N | SWITCH (AELM) | |

CESSNA AIRCRAFT CO. COMMERCIAL AIRCRAFT DIVISION WICHITA, KANSAS

| | NAME | DATE |
|---|---|---|
| DRAWN | G WOOD | 2-22-64 |
| GROUP | | 7-9-64 |
| CHECK | R Stuck | 7-6-64 |
| PROJ | H. McCarter | 7-10-64 |

TITLE: WIRING DIAGRAM — OMNI SWITCH, TERMINAL BLOCK & MUTING RELAY

Cessna.

DWG NO. 0770750

(SR 9451)

| LET | REVISION | DATE | APPD |
|---|---|---|---|
| | | | |

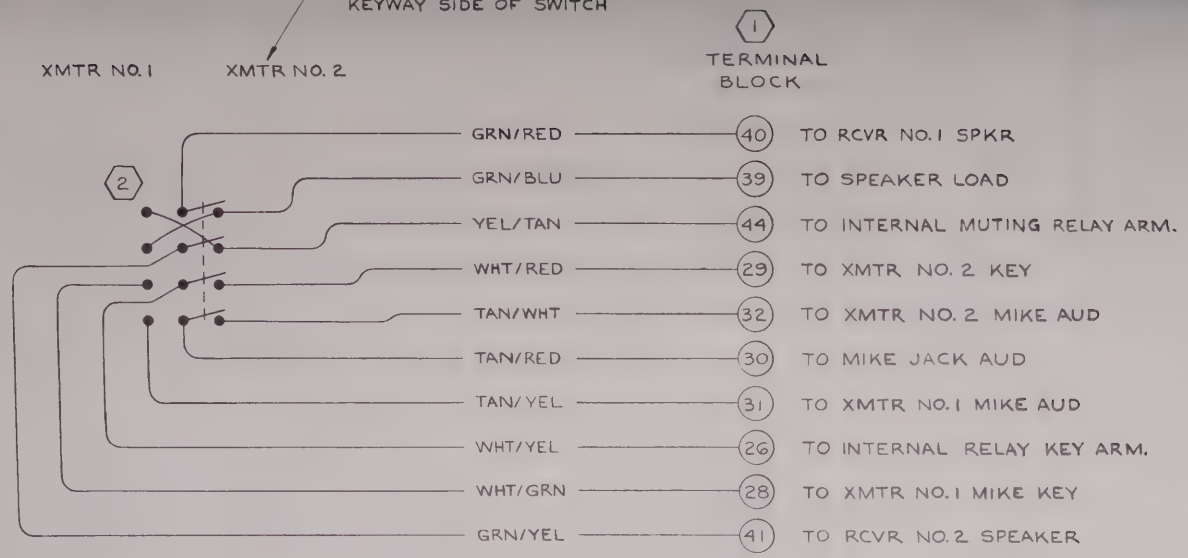


NOTES:
1. ALL WIRE MATL PER S-1460.
2. TERMINAL BLOCK NUMBERS TO BE STAMPED ON WIRE PER CES-1015.

| W-RE CODE NO | GA | MATERIAL | LG | TERMINALS | | SERIALS |
|---|---|---|---|---|---|---|
| TAN/WHT | 22 | -22-10-9 | | SOLDER | S-1367-1-8 | |
| TAN/YEL | 22 | -22-10-4 | | | | |
| TAN/RED | 22 | -22-10-2 | | | | |
| WHT/GRN | 22 | -22-9-5 | | | | |
| WHT/YEL | 22 | -22-9-4 | | | | |
| WHT/RED | 22 | -22-9-2 | | | | |
| GRN/BLU | 20 | -20-5-6 | | | | |
| GRN/YEL | 20 | -20-5-4 | | | | |
| GRN/RED | 20 | -20-5-2 | | | | |
| YEL/TAN | 20 | -20-4-10 | | SOLDER | S-1367-1-8 | |

1 WIRE TABLE

| ITEM NO | PART NO | DESCRIPTION | INSTALLED ON |
|---|---|---|---|
| 2 | MST-405N | SWITCH (AELM) | |
| 1 | 0770714-1 | TERM. BLOCK ASSY | |

EQUIPMENT TABLE

CESSNA AIRCRAFT CO., COMMERCIAL AIRCRAFT DIVISION, WICHITA, KANSAS

| | NAME | DATE |
|---|---|---|
| DRAWN | G WOOD | 2-20-64 |
| GROUP | [illegible] | 7-9-64 |
| CHECK | [illegible] | 7-6-64 |
| PROJ | [illegible] | 7-10-64 |

TITLE: WIRING DIAGRAM — TRANSMITTER SELECTOR SWITCH

Cessna.

DWG NO. 0770750

| SUPERSEDED BY | SUPERSEDES | MODEL | REV | PAGE |
|---|---|---|---|---|
| | | 182 | | 2.6.3 |

FORM NO. 80-161

| CHG LET | REVISION | BY / DATE | CHK / APPD |
|---|---|---|---|
| | | | |

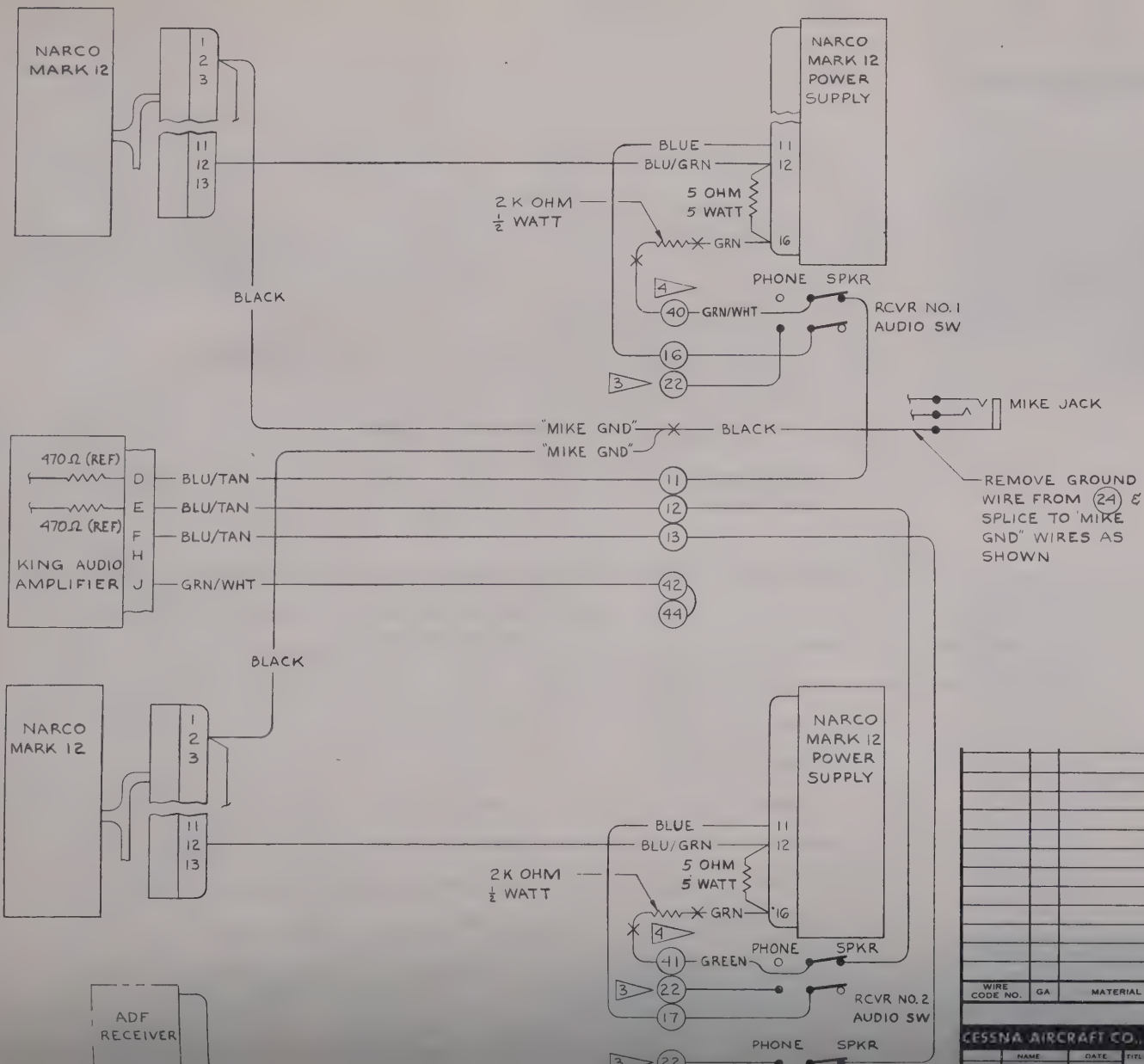


NOTES:

1. ◯ ARE NUMBERS ON TERMINAL BOARD.
2. ON SINGLE MARK 12 & ADF INSTL, AUDIO SW NO. 3 WILL NOT BE USED.

3 PHONE TERMINAL MAY BE JUMPERED TO ADJACENT AUDIO SWITCH PHONE TERMINAL INSTEAD OF BEING ROUTED TO TERMINAL BOARD.

4 REMOVE EXISTING WIRES FROM (40) & (41) (GRN/RED & GRN/YEL RESPECTIVELY) & TERMINATE WITH S-1557-1 CAP.

5. THIS IS A REFERENCE PRINT ONLY.

| WIRE CODE NO. | GA | MATERIAL | LG | TERMINALS | | SERIALS |
|---|---|---|---|---|---|---|
| | | | | | | |

**WIRE TABLE**

CESSNA AIRCRAFT CO., COMMERCIAL AIRCRAFT DIVISION, WICHITA, KANSAS

| | NAME | DATE | TITLE |
|---|---|---|---|
| DRAWN | | | |
| TRACED | | | |
| ENGR APPR | | | |

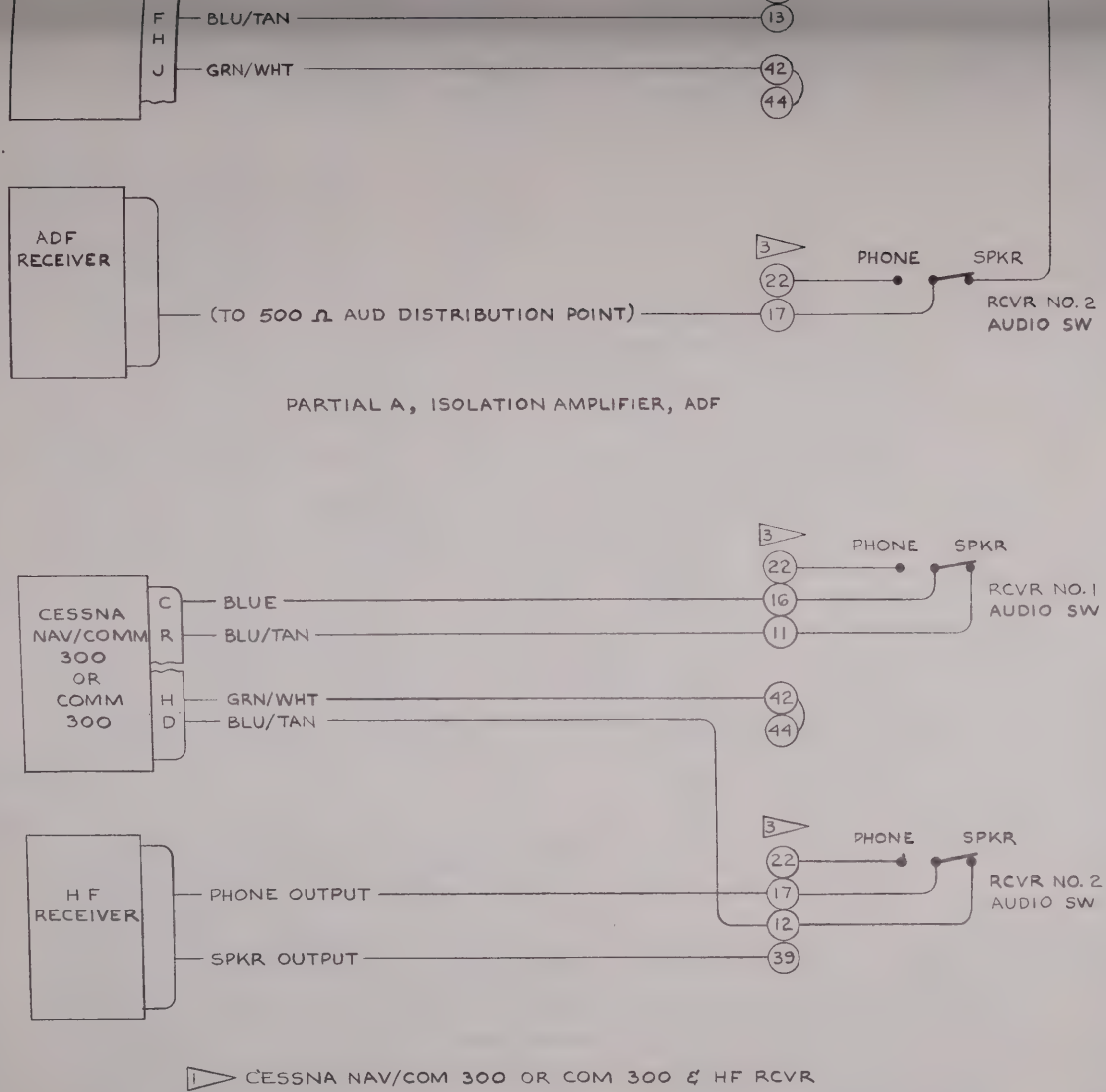


NOTES:

1. SPKR OUTPUT OF RCVR'S WILL NOT CONNECT TO (40) OR (41) ON TERMINAL BOARD.
2. ◯ ARE NUMBERS ON TERMINAL BOARD.
3. PHONE TERMINAL MAY BE JUMPERED TO ADJACENT AUDIO SWITCH PHONE TERMINAL INSTEAD OF BEING ROUTED TO TERMINAL BOARD.
4. THIS IS A REF PRINT ONLY.

| WIRE CODE NO. | GA | MATERIAL | LG | TERMINALS | | SERIALS |
|---|---|---|---|---|---|---|

WIRE TABLE

CESSNA AIRCRAFT CO., COMMERCIAL AIRCRAFT DIVISION, WICHITA, KANSAS

| | NAME | DATE |
|---|---|---|
| DRAWN | G WOOD | 2-15-65 |
| GROUP | H. Wise | 2-16-65 |
| CHECK | R. Stark | 2-16-65 |
| PROJ | [illegible] | 2-17-65 |

TITLE: WIRING DIAGRAM— TYPICAL SWITCHING - PARTIAL "A", ISO AMP & ADF; HF TRANSCEIVER & COMM 300

Cessna.

DWG NO: 0770750

SUPERSEDED BY: | SUPERSEDES: | MODEL: 182 | REV: | PAGE: 2.6.5

| ITEM NO | PART NO. | DESCRIPTION | INSTALLED ON |
|---|---|---|---|

EQUIPMENT TABLE

FORM NO. 80-161A

(SR4938)

| CHG LET | REVISION | BY / DATE | CHK / APPD |
|---|---|---|---|
| | | | |

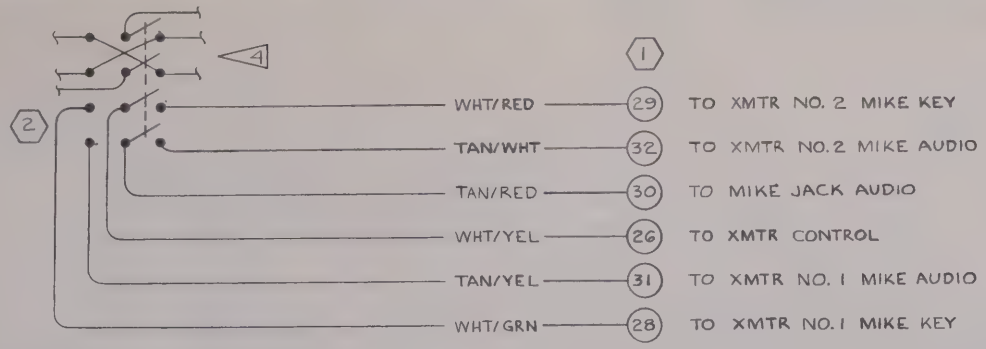


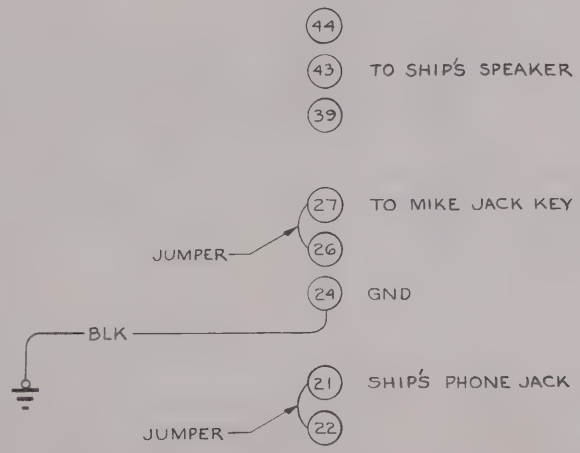


NOTE:

1. INFORMATION ON THIS PAGE IS TO BE USED ONLY WITH KING KA-25C AUDIO AMPLIFIER.
2. TERMINAL BLOCK NUMBERS TO BE STAMPED ON WIRE PER CES-1015.
3. WHEN A SINGLE TRANSCEIVER IS INSTALLED WITH ANY RECEIVING UNIT, JUMPERS ARE REQD BETWEEN (26) & (28) FOR MIKE KEYING, AND BETWEEN (30) & (31) FOR MIKE AUDIO.
4. REF PAGE 2.6.3 FOR COMPLETE SWITCH WIRING. TERMINALS OF WIRES NOT USED ARE TO BE COVERED WITH VINYL SLEEVING & WIRES TO BE TIED INTO WIRE BUNDLE.

| WIRE CODE NO. | GA | MATERIAL | LG | TERMINALS | | | SERIALS |
|---|---|---|---|---|---|---|---|
| TAN/YEL | 22 | S-1960-22-10-9 | | SOLDER | S-1367-1-8 | | |
| TAN/WHT | 22 | -22-10-3 | | | | | |
| TAN/RED | 22 | -22-10-2 | | | | | |
| WHT/YEL | 22 | -22-9-9 | | | | | |
| WHT/GRN | 22 | -22-9-5 | | | | | |
| WHT/RED | 22 | -22-9-2 | | SOLDER | | | |
| BLACK | 22 | S-1960-22-0 | | S-1367-1-8 | S-1367-1-8 | | |

WIRE TABLE

CESSNA AIRCRAFT CO. COMMERCIAL AIRCRAFT DIVISION, WICHITA, KANSAS

| NAME | DATE | TITLE |
|---|---|---|
| | | |

(SR 4451)

| CHG LET | REVISION | DATE | APPD |
|---|---|---|---|
| | | | |

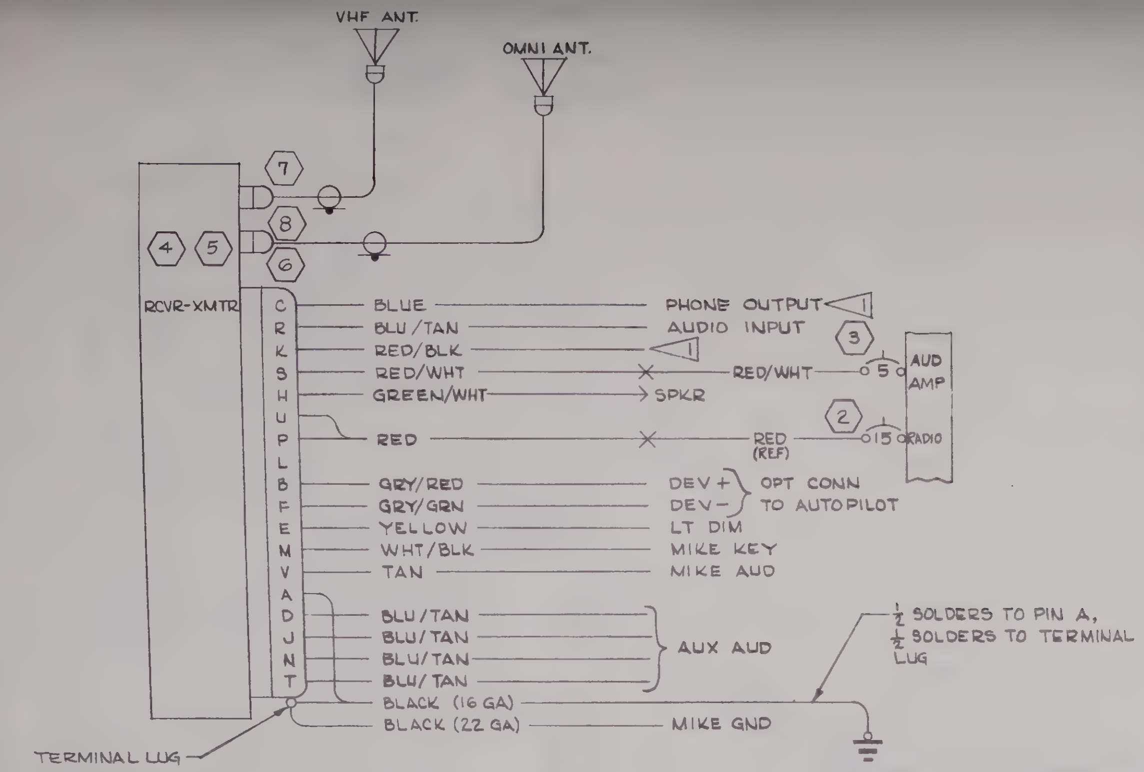


Inactive (SR 4642) & ON GLW 5-19-65 [illegible] 6-7-65 [illegible]

NOTES:

1. ON SINGLE CESSNA NAV/COM 300 INSTL, RED/BLK WIRE (PIN K) IS CONNECTED TO RED/WHT WIRE (PIN S) WITH AN S-1370-1 SPLICE, AND BLUE WIRE (PIN C) IS CONNECTED TO BLU/TAN WIRE (PIN R, D, J, N, OR T) WITH AN S-1370-1 SPLICE. WHEN THE NAV/COM 300 IS INSTALLED WITH OTHER RADIO UNITS, RED/WHT WIRE CONNECTS TO CKT BKR AS SHOWN & RED/BLK WIRE IS CUTOFF AT CONNECTOR; BLUE WIRE CONNECTS TO WIPER OF A SPKR-PHONE SWITCH & BLU/TAN WIRE CONNECTS TO SPKR TERMINAL OF SPKR-PHONE SWITCH.
2. S-1557-1 CAP REPLACED WITH S-1367-1-8 TERMINAL WHEN COMBINED WITH OTHER RADIOS.
3. FOR DUAL 514A INSTALLATIONS, REF PAGE 2.7.1.1

(SEE PAGE 2.7.1.1 FOR CONTINUATION OF NOTES)

| ITEM NO | PART NO. | DESCRIPTION | INSTALLED ON |
|---|---|---|---|
| | | | |
| | | | |
| | | | |
| | | | |
| | | | |
| 8 | 29752 | CONNECTOR (ARC) | |
| 7 | 29753 | CONNECTOR (ARC) | |
| 6 | 29747-0018 | CONNECTOR (ARC) | |
| 5 | 30410-1314 | RCVR-XMTR (360 CH) | (ARC) |
| 4 | 30410-1214 | RCVR-XMTR (100 CH) | (ARC) |
| 3 | S-1360-5 | CIRCUIT BREAKER | |
| 2 | S-1360-15 | CIRCUIT BREAKER | |
| 1 | | | |

EQUIPMENT TABLE

| WIRE CODE NO. | GA | MATERIAL | LG | TERMINALS | | | SERIALS |
|---|---|---|---|---|---|---|---|
| RED/WHT | 18 | -18-2-9 | | S-1370-1 | S-1367-1-6 | | |
| BLU/TAN | 22 | -22-6-10 | | SOLDER | S-1557-1 | 2 | |
| BLU/TAN | 22 | -22-6-10 | | | S-1557-1 | 2 | |
| BLU/TAN | 22 | -22-6-10 | | | S-1557-1 | 2 | |
| BLACK | 16 | -16-0 | | | S-1367-2-8 | | |
| WHT/BLK | 22 | -22-9-0 | | | | | |
| GRY/GRN | 22 | -22-8-5 | | | S-1557-1 | | |
| GRY/RED | 22 | -22-8-2 | | | S-1557-1 | | |
| BLU/TAN | 22 | -22-6-10 | | | S-1557-1 | 2 | |
| BLU/TAN | 22 | -22-6-10 | | | S-1557-1 | 2 | |
| RED/WHT | 18 | -18-2-9 | | | | | |
| RED/BLK | 18 | -18-2-0 | | | | | |
| BLACK | 22 | -22-0 | | | | | |
| TAN | 22 | -22-10 | | | | | |
| BLUE | 22 | -22-6 | | | | | |
| RED | 16 | -16-2 | | | S-1370-2 | | |
| YELLOW | 18 | -18-4 | | | | | |
| GRN/WHT | 20 | -20-5-9 | | SOLDER | S-341-2 | | |

8

WIRE TABLE

CESSNA AIRCRAFT CO. COMMERCIAL AIRCRAFT DIVISION, WICHITA, KANSAS

| | NAME | DATE |
|---|---|---|
| DRAWN | BALES | 7-6-64 |
| GROUP | 2E Moore | 8-15-64 |
| CHECK | [illegible] | [illegible] |
| PROJ | H. Wise | 8-20-64 |

TITLE: WIRING DIAGRAM — CESSNA NAV/COM 300 (ARC TYPE 514A)

Cessna.

DWG NO. 0770750

SUPERSEDED BY 0770750 PAGE 2.31.1.0 | SUPERSEDES 0770610 PAGE 17.22 | MODEL 182 | REV | PAGE 2.7.1.0

FORM NO. 80-161

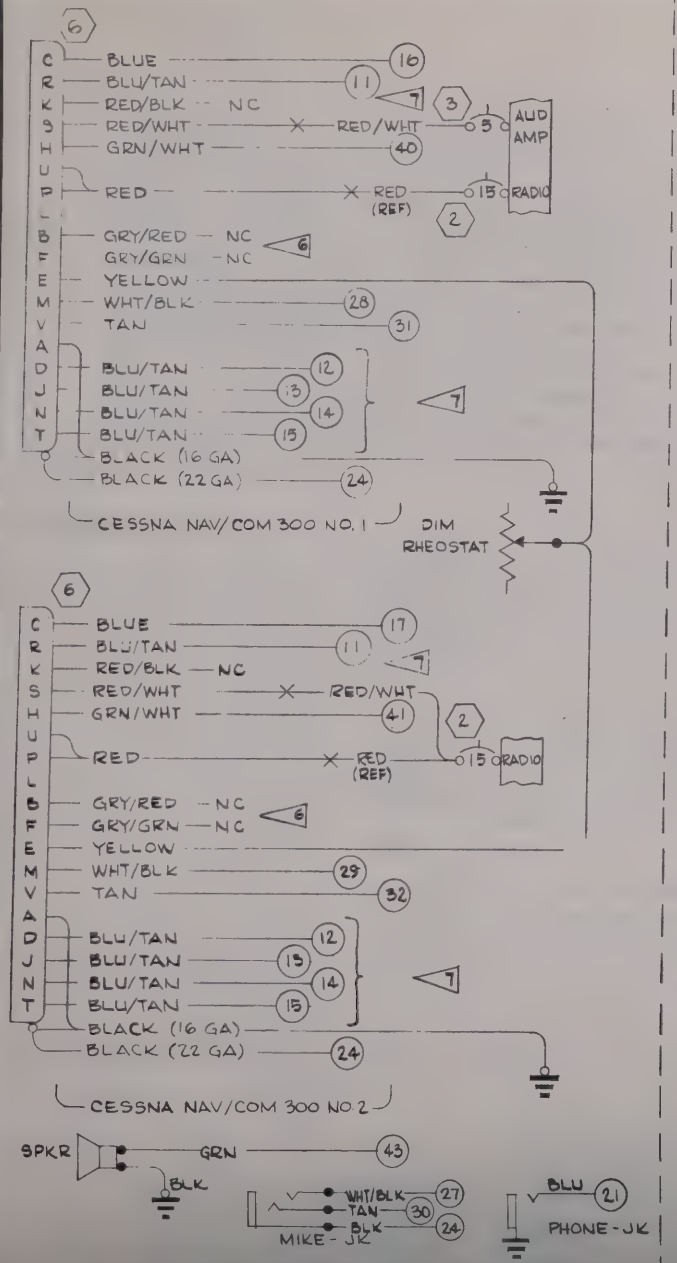


TYPICAL INTERCONNECTION OF DUAL CESSNA

(SR 4451)

| CHG LET | REVISION | BY DATE | CHK APPD |
|---|---|---|---|
| | | | |

NOTES CONTINUED:

4. CIRCLED NUMBERS "○" REFER TO TERMINALS ON TERMINAL BOARD ASSY (REF PAGE 2.6.1, 2.6.2, 2.6.3)
5. CESSNA NAV/COM 300 AMPLIFIERS ARE OPERATED "ALWAYS HOT! SPEAKER OUTPUTS FROM EACH SYSTEM DRIVE EITHER A 5 OHM, 10 WATT DUMMY LOAD OR THE SHIPS SPEAKER AS DETERMINED BY THE TRANSMITTER SELECTED (REF PAGE 2.6.3)

6 ▷ WHEN AN OPTIONAL NAV-O-MATIC AUTOPILOT WITH OMNI COUPLER IS COMBINED WITH A CESSNA NAV/COM 300, THE GRY/RED WIRE CONNECTS TO DEV + CIRCUIT & THE GRY/GRN WIRE CONNECTS TO DEV − CIRCUIT.

7 ▷ THE (5) BLU/TAN (150 AMP INPUTS) FROM EACH NAV/COM SET TO BE CONNECTED TO TERMINALS 11 THRU 15 ON TERMINAL BOARD IN ANY SEQUENCE. CAUTION: DO NOT CONNECT (2) BLU/TAN WIRES FROM SAME SET TO SAME TERMINAL.

8 ▷ WIRE MATERIAL PER S-1460.

Mactul (SR 4642) & ON
GLW 5-19-65
RHW 6-7-65
RRS

| PART NO | DESCRIPTION | INSTALLED ON |
|---|---|---|
| | | |

| WIRE CODE NO. | GA | MATERIAL | LG | TERMINALS | SERIALS |
|---|---|---|---|---|---|
| | | | | | |

WIRE TABLE

CESSNA AIRCRAFT CO. COMMERCIAL AIRCRAFT DIVISION WICHITA KANSAS

| | NAME | DATE |
|---|---|---|
| DRAWN | BALES | 7-6-64 |
| GROUP | R.E. Moore | 8-16-64 |
| CHECK | R. Stick | 8-15-64 |
| PROJ | H. Wall | 8-20-64 |

TITLE
WIRING DIAGRAM —
CESSNA NAV/COM 300
(ARC TYPE 514A)

Cessna.

DWG NO
0770750

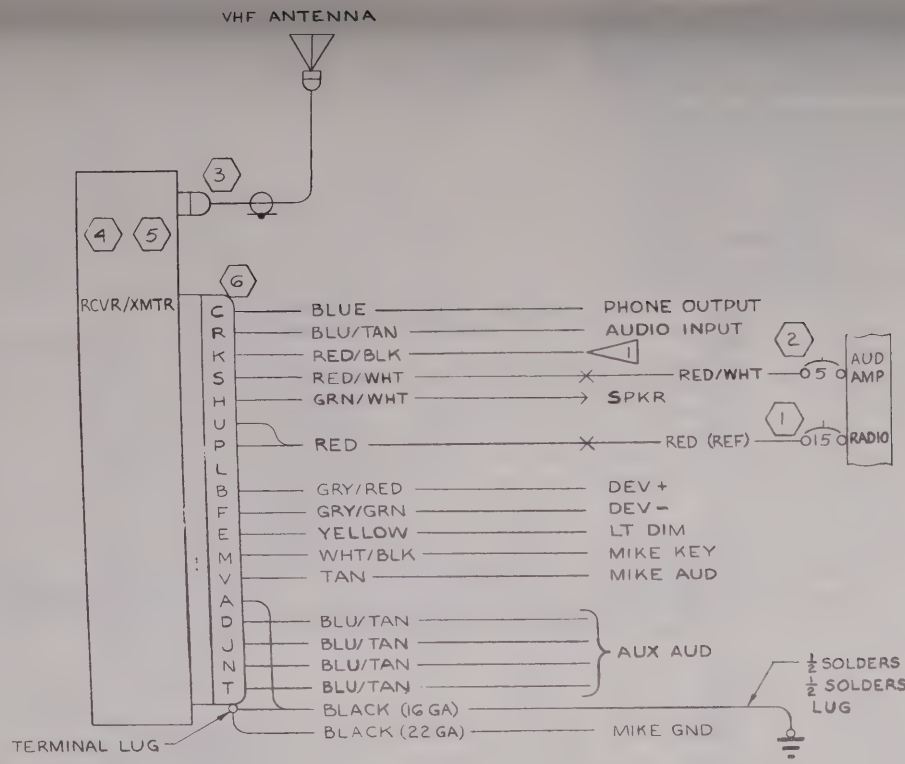


NOTES:

1. ON SINGLE CESSNA COM 300 INSTL, RED/BLK WIRE (PIN K) IS CONNECTED TO RED/WHT WIRE (PIN S) WITH AN S-1370-1 SPLICE, AND BLUE WIRE (PIN C) IS CONNECTED TO BLU/TAN WIRE (PIN R) WITH AN S-1370-1 SPLICE. WHEN THE COM 300 IS INSTALLED WITH OTHER RADIO UNITS, RED/WHT WIRE CONNECTS TO CKT BKR AS SHOWN & RED/BLK WIRE IS TERMINATED WITH S-1557-1 CAP; BLUE WIRE CONNECTS TO WIPER OF A SPKR-PHONE SWITCH & BLU/TAN WIRE CONNECTS TO SPKR TERMINAL OF SPKR-PHONE SWITCH.
2. S-1557-1 CAP REPLACED WITH S-1367-1-8 TERMINAL WHEN COMBINED WITH OTHER RADIOS.
3. WIRE MATL PER S-1460.

| ITEM NO | PART NO. | DESCRIPTION | INSTALLED ON |
|---|---|---|---|
| 6 | 29747-0018 | CONNECTOR (ARC) | |
| 5 | 31390-1614 | RCVR/XMTR (EXP)(ARC) | |
| 4 | 31390-1114 | RCVR/XMTR (ARC) | |
| 3 | 29753 | CONNECTOR (ARC) | |
| 2 | S-1360-5 | CIRCUIT BREAKER | |
| 1 | S-1360-15 | CIRCUIT BREAKER | |

EQUIPMENT TABLE

| WIRE CODE NO. | GA | MATERIAL | LG | TERMINALS | | SERIALS |
|---|---|---|---|---|---|---|
| RED/WHT | 18 | -18-2-9 | | S-1370-1 | S-1367-1-6 | |
| BLU/TAN | 22 | -22-6-10 | | SOLDER | S-1557-1 | 2 |
| BLU/TAN | 22 | -22-6-10 | | | S-1557-1 | 2 |
| BLU/TAN | 22 | -22-6-10 | | | S-1557-1 | 2 |
| BLACK | 16 | -16-0 | | | S-1367-2-8 | |
| WHT/BLK | 22 | -22-9-0 | | | | |
| GRY/GRN | 22 | -22-8-5 | | | S-1557-1 | |
| GRY/RED | 22 | -22-8-2 | | | S-1557-1 | |
| BLU/TAN | 22 | -22-6-10 | | | S-1557-1 | 2 |
| BLU/TAN | 22 | -22-6-10 | | | | |
| RED/WHT | 18 | -18-2-9 | | | | |
| RED/BLK | 18 | -18-2-0 | | | | |
| BLACK | 22 | -22-0 | | | | |
| TAN | 22 | -22-10 | | | | |
| BLUE | 22 | -22-6 | | | | |
| RED | 16 | -16-2 | | | S-1370-2 | |
| YELLOW | 18 | -18-4 | | | | |
| GRN/WHT | 20 | -20-5-9 | | SOLDER | S-341-2 | |

3 WIRE TABLE

CESSNA AIRCRAFT CO COMMERCIAL AIRCRAFT DIVISION, WICHITA, KANSAS

| | NAME | DATE |
|---|---|---|
| DRAWN | WOOD | 7-16-69 |
| GROUP | | |
| CHECK | | |
| PROJ | | |

TITLE: WIRING DIAGRAM — CESSNA COM 300 (ARC TYPE 524A)

Cessna.

DWG NO. 0770750

| SUPERSEDED BY | SUPERSEDES | MODEL | REV | PAGE |
|---|---|---|---|---|
| | | 182 | | 2.7.2 |

FORM NO. 80-161

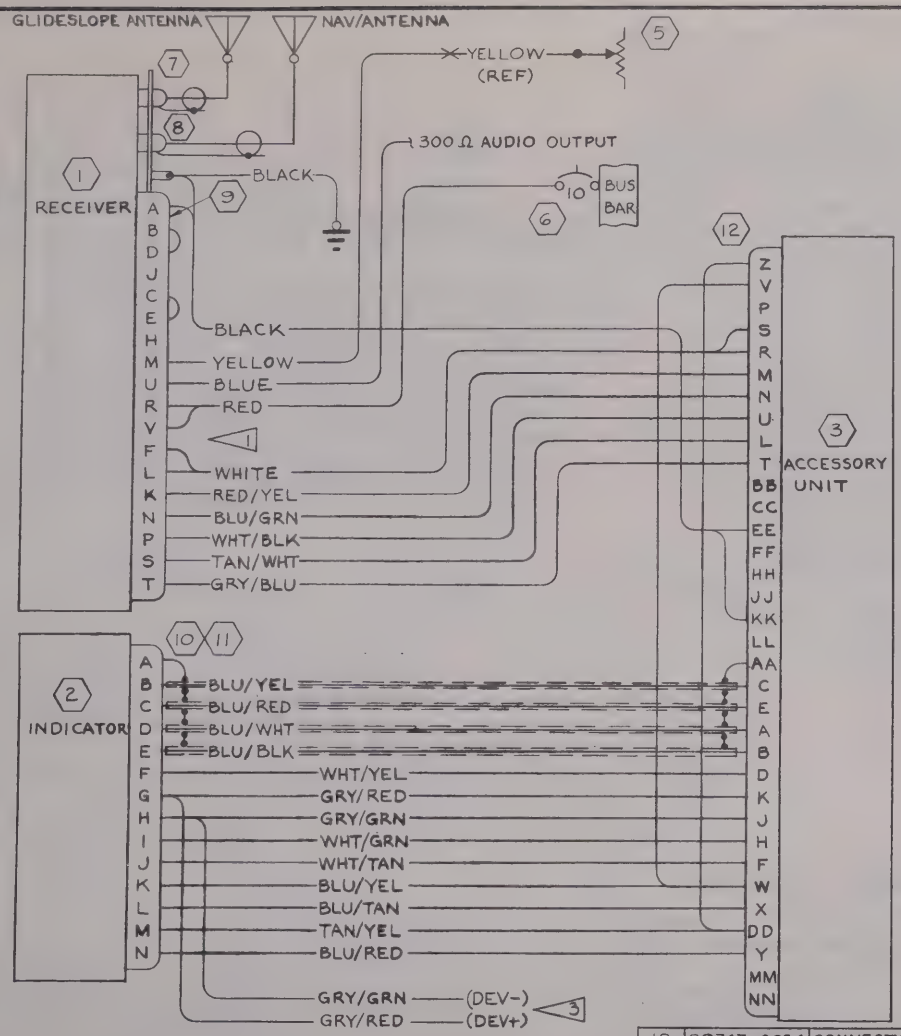


NOTES: (SR 4451)

1. RED, WHITE & BLACK 16 GA WIRES TO BE HALVED & SOLDERED TO PINS AS SHOWN.
2. WIRE MATERIAL PER S-1460 EXCEPT FOR SHIELDED WIRE.
3. TERMINALS NOT REQD WHEN RADIO IS INSTALLED WITH AN AUTOPILOT.

| CHG LET | REVISION | BY / DATE | CHK / APPD |
|---|---|---|---|
| A | BY REVISION: ADD BLACK WIRE FROM PIN A OF RCVR TO PIN EE & KK OF ACCESSORY UNIT. REMOVED JUMPER FROM PIN P TO PIN Z OF ACCESSORY UNIT. REMOVED BLACK WIRE FROM PIN Z TO GND ON ACCESSORY UNIT. ADD JUMPER FROM PIN Z TO PIN DD OF ACCESSORY UNIT. ADD JUMPER FROM PIN V TO PIN W | G L W 11-7-64 | RRS JE HLW |

| WIRE CODE NO. | GA | MATERIAL | LG | TERMINALS | | | SERIALS |
|---|---|---|---|---|---|---|---|
| BLACK | 16 | S-1460-16-0 | | SOLDER | SOLDER | | |
| BLACK | 16 | S-1460-16-0 | | S-1367-2-8 | SOLDER | | |
| BLU/WHT | 22-S | S-1461-22-6-9 | | SOLDER | SOLDER | | |
| BLU/YEL | 22-S | S-1461-22-6-4 | | | | | |
| BLU/BLK | 22-S | S-1461-22-6-0 | | | | | |
| BLU/RED | 22-S | S-1461-22-6-2 | | | | | |
| WHT/BLK | 22 | -22-9-0 | | | | | |
| TAN/WHT | 22 | -22-10-9 | | | | | |
| TAN/YEL | 22 | -22-10-4 | | | | | |
| WHT/TAN | 22 | -22-9-10 | | | | | |
| WHT/GRN | 22 | -22-9-5 | | | | | |
| WHT/YEL | 22 | -22-9-4 | | | SOLDER | | |
| GRY/GRN | 22 | -22-8-5 | | SOLDER | S-1557-1 | | |
| GRY/GRN | 22 | -22-8-5 | | SOLDER | SOLDER | | |
| GRY/RED | 22 | -22-8-2 | | | S-1557-1 | | |
| GRY/RED | 22 | -22-8-2 | | | SOLDER | | |
| GRY/BLU | 22 | -22-8-6 | | | | | |
| BLU/TAN | 22 | -22-6-10 | | | | | |
| BLU/GRN | 22 | -22-6-5 | | | | | |
| BLU/YEL | 22 | -22-6-4 | | | | | |
| BLU/RED | 22 | -22-6-2 | | | | | |
| RED/YEL | 22 | -22-2-4 | | | | | |
| WHITE | 16 | -16-9 | | | SOLDER | | |
| BLUE | 22 | -22-6 | | | | | |
| YELLOW | 18 | -18-4 | | | S-1370-1 | | |
| RED | 16 | -16-2 | | SOLDER | S-1367-2-6 | | |

2 WIRE TABLE

| | PART NO. | DESCRIPTION | INSTALLED ON |
|---|---|---|---|
| 12 | 29747-0034 | CONNECTOR (ARC) | |
| 11 | MS3057-12A | CLAMP | |
| 10 | MS3106A-20-27S | PLUG | |
| 9 | 29747-0018 | CONNECTOR (ARC) | |
| 8 | 29752 | CONNECTOR (ARC) | |
| 7 | 29753 | CONNECTOR (ARC) | |
| 6 | S-1360-10 | CIRCUIT BREAKER | |
| 5 | R-12½-75-RS34 | RHEOSTAT (TRTA) | |
| 4 | | | |
| 3 | 32890-0014 | ACCESSORY UNIT (ARC RA-525A) | |
| 2 | 32350 | INDICATOR (ARC IN-525A) | |
| 1 | 31380-1000 | RCVR (ARC R-525A-10) | |

CESSNA AIRCRAFT CO. COMMERCIAL AIRCRAFT DIVISION WICHITA KANSAS

| | NAME | DATE |
|---|---|---|
| DRAWN | G WOOD | 4-30-64 |
| GROUP | [illegible] | 7-9-64 |
| CHECK | R. Stuck | 7-6-64 |
| PROJ | H. McCarter | 7-10-64 |

TITLE: WIRING DIAGRAM — CESSNA NAV/OMNI 300 (ARC TYPE 525A)

Cessna.

DWG NO. 0770750

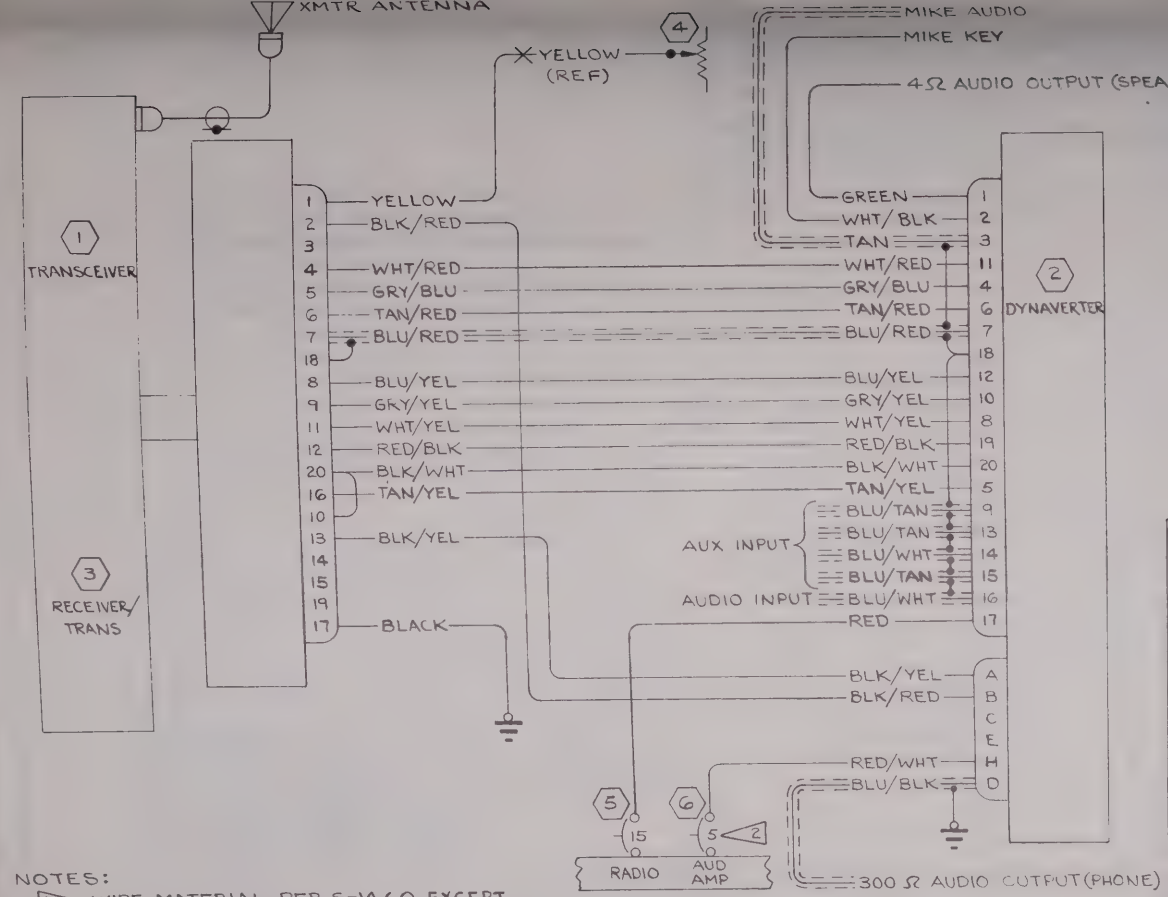


NOTES:

1. WIRE MATERIAL PER S-1460 EXCEPT FOR SHIELDED WIRE.
2. RED/WHT WIRE (ISO-AMP POWER) MAY BE CONNECTED TO A DIFFERENT BREAKER WHEN THIS SYSTEM IS COMBINED WITH OTHER 500 SERIES EQUIPMENT.

| WIRE CODE NO | GA | MATERIAL | LG | TERMINALS | | SERIALS |
|---|---|---|---|---|---|---|
| BLACK | 16 | -16-0 | | SOLDER | S-1367-2-8 | |
| RED/WHT | 18 | -18-2-9 | | | S-1367-1-6 | |
| BLU/BLK | 22S | S-1461-22-6-0 | | | | |
| BLU/WHT | 22S | S-1461-22-6-9 | | | | |
| BLU/WHT | 22S | S-1461-22-6-9 | | | | |
| BLU/TAN | 22S | S-1461-22-6-10 | | | | |
| BLU/TAN | 22S | S-1461-22-6-10 | | | | |
| BLU/TAN | 22S | S-1461-22-6-10 | | | | |
| TAN | 22S | S-1461-22-10 | | | | |
| WHT/BLK | 22 | -22-9-0 | | | | |
| GREEN | 20 | -20-5 | | | | |
| BLK/WHT | 18 | -18-0-9 | | | SOLDER | |
| RED/BLK | 18 | -18-2-0 | | | | |
| BLU/YEL | 22 | -22-6-4 | | | | |
| BLU/RED | 22S | S-1461-22-6-2 | | | | |
| TAN/YEL | 22 | -22-10-4 | | | | |
| TAN/RED | 22 | -22-10-2 | | | | |
| GRY/YEL | 22 | -22-8-4 | | | | |
| GRY/BLU | 22 | -22-8-6 | | | | |
| WHT/YEL | 22 | -22-9-4 | | | | |
| WHT/RED | 22 | -22-9-2 | | | | |
| BLK/YEL | 22 | -22-0-4 | | | | |
| BLK/RED | 22 | -22-0-2 | | | SOLDER | |
| YELLOW | 18 | -18-4 | | | S-1370-1 | |
| RED | 16 | -16-2 | | SOLDER | S-1367-2-6 | |

1 WIRE TABLE

| ITEM NO | PART NO | DESCRIPTION | INSTALLED ON |
|---|---|---|---|
| 6 | S-1360-5 | CIRCUIT BREAKER | |
| 5 | S-1360-15 | CIRCUIT BREAKER | |
| 4 | R-12½-75-RS34 | RHEOSTAT (TRTA) | |
| 3 | 33580-1000 | RECEIVER/TRANS (ARC TYPE RT-302H) | |
| 2 | 32380-0014 | DYNAVERTER (ARC TYPE DV-302B) | |
| 1 | 33200-1000 | TRANSCEIVER (ARC TYPE RT-302G-10) | |

EQUIPMENT TABLE

CESSNA AIRCRAFT CO., COMMERCIAL AIRCRAFT DIVISION, WICHITA, KANSAS

| | NAME | DATE |
|---|---|---|
| DRAWN | RIDDER | 7-13-64 |
| GROUP | | |
| CHECK | | 8-7-64 |
| PROJ | | 8-20-64 |

TITLE: WIRING DIAGRAM — CESSNA TRANSCEIVER 500 (ARC TYPE 302G)

Cessna.

DWG NO. 0770750

SUPERSEDED BY | SUPERSEDES 0770610 | MODEL: 182 | REV | PAGE: 2.10.1

FORM NO. 80-161

(SR 4451)

| CHG LET | REVISION | BY / DATE | CHK / APPD |
|---|---|---|---|
| A | ADDED: 263 CHOKE IN A+LINE, 33827 & NOTE 2. 32880-1000 WAS 3288-1000 | SKH 9-10-65 | REE HFW |

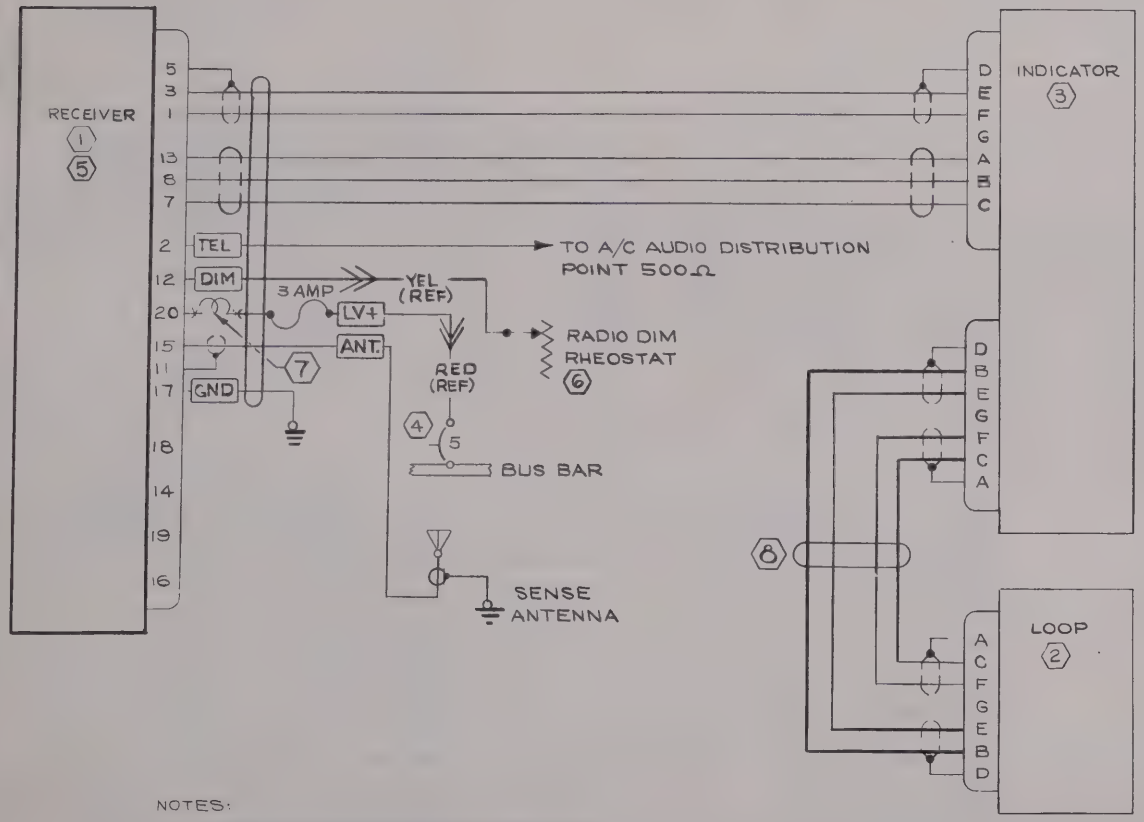


NOTES:

1. CONNECTIONS SHOWN ARE FOR TOP MOUNTED SENSE & BOTTOM MOUNTED LOOP ANTENNA.
2. **ALL WIRES ARE VENDOR FURNISHED WITH** RCVR, EXCEPT CHOKE IN CIRCUIT BETWEEN PIN 20 & THE FUSEHOLDER WHICH MUST BE ADDED ON INSTL IN ACFT.

| | PART NO | DESCRIPTION | INSTALLED ON |
|---|---|---|---|
| 8 | 33827 | LOOP CABLE (ARC) | |
| 7 | A-263 | CHOKE (CTAT) | |
| 6 | R-12½-75-RS34 | RHEOSTAT (TRTA) | |
| 5 | 28340-1400 | RCVR (WITH BFO) | (ARC R-521A-14) |
| 4 | S-1360-5 | CIRCUIT BREAKER | |
| 3 | 32680-0000 | INDICATOR (ARC) | (ARC IN-521B) |
| 2 | 32880-1000 | LOOP (ARC) | (ARC L-521B-10) |
| 1 | 28340-1500 | RCVR (WITHOUT BFO) | (ARC R-521A-15) |

| WIRE CODE NO | GA | MATERIAL | LG | TERMINALS | SERIALS |
|---|---|---|---|---|---|
| | | | | | |

WIRE TABLE

CESSNA AIRCRAFT CO., COMMERCIAL AIRCRAFT DIVISION, WICHITA KANSAS

| | NAME | DATE |
|---|---|---|
| DRAWN | BREEN | 8-5-64 |
| GROUP | | 9-1-64 |
| CHECK | | 8-25-64 |
| PROJ | | 8-24-64 |

TITLE: WIRING DIAGRAM — CESSNA ADF 300 (ARC TYPE 521B)

Cessna.

DWG NO 0770750

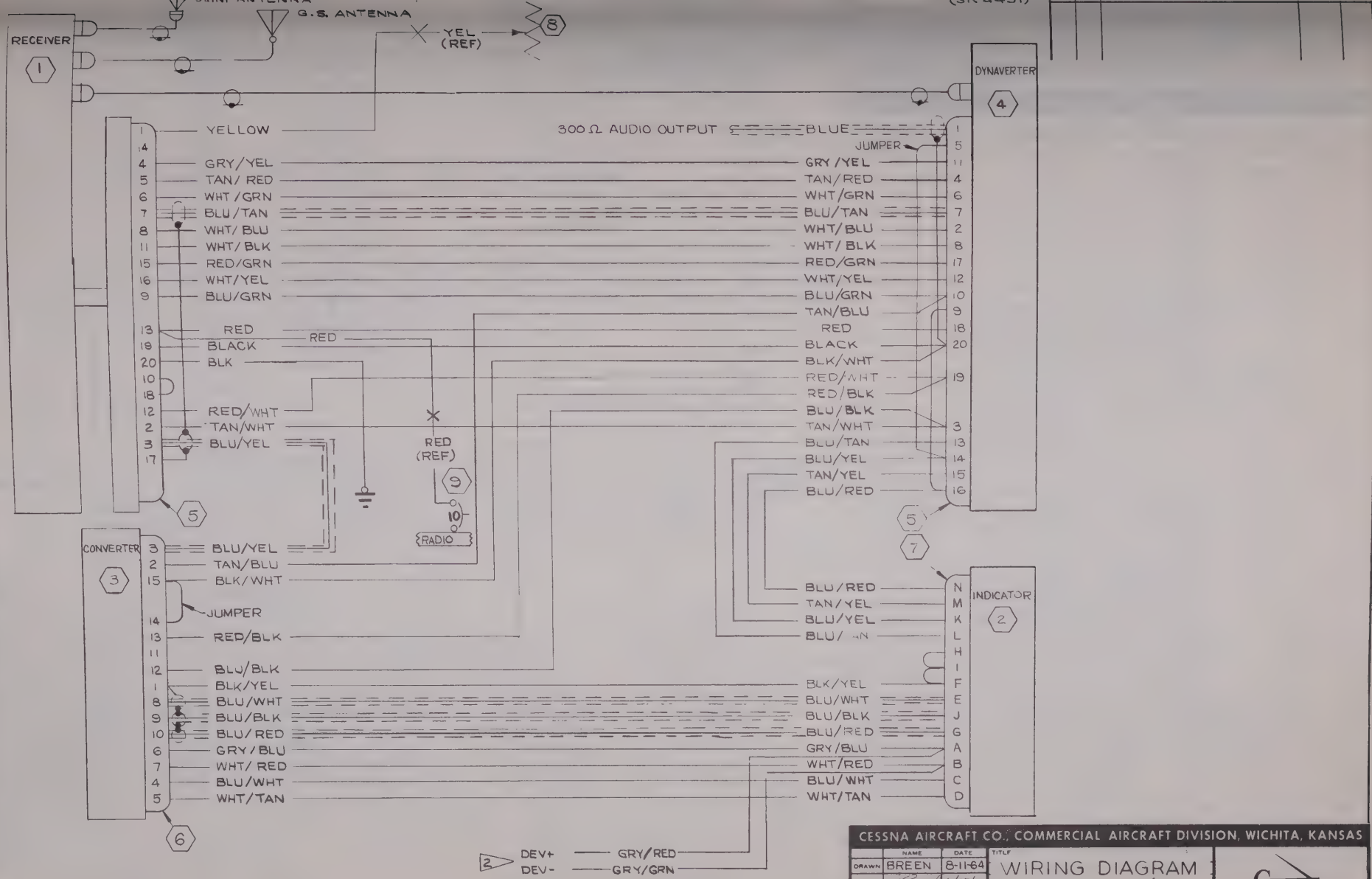


CESSNA AIRCRAFT CO., COMMERCIAL AIRCRAFT DIVISION, WICHITA, KANSAS

| | NAME | DATE |
|---|---|---|
| DRAWN | BREEN | 8-11-64 |
| GROUP | [illegible] | 9/17/64 |
| CHECK | P. Stuck | 9-3-64 |
| STRESS | [illegible] | 9-4-64 |
| PROJ | | |

TITLE: WIRING DIAGRAM CESSNA NAV/OMNI 500 (ARC TYPE 319G)

Cessna.

DWG NO 0770750

SUPERSEDED BY:

SUPERSEDES 0770610 PAGE 17.11.3

MODEL: 182

REV:

PAGE: 2.13.1.1

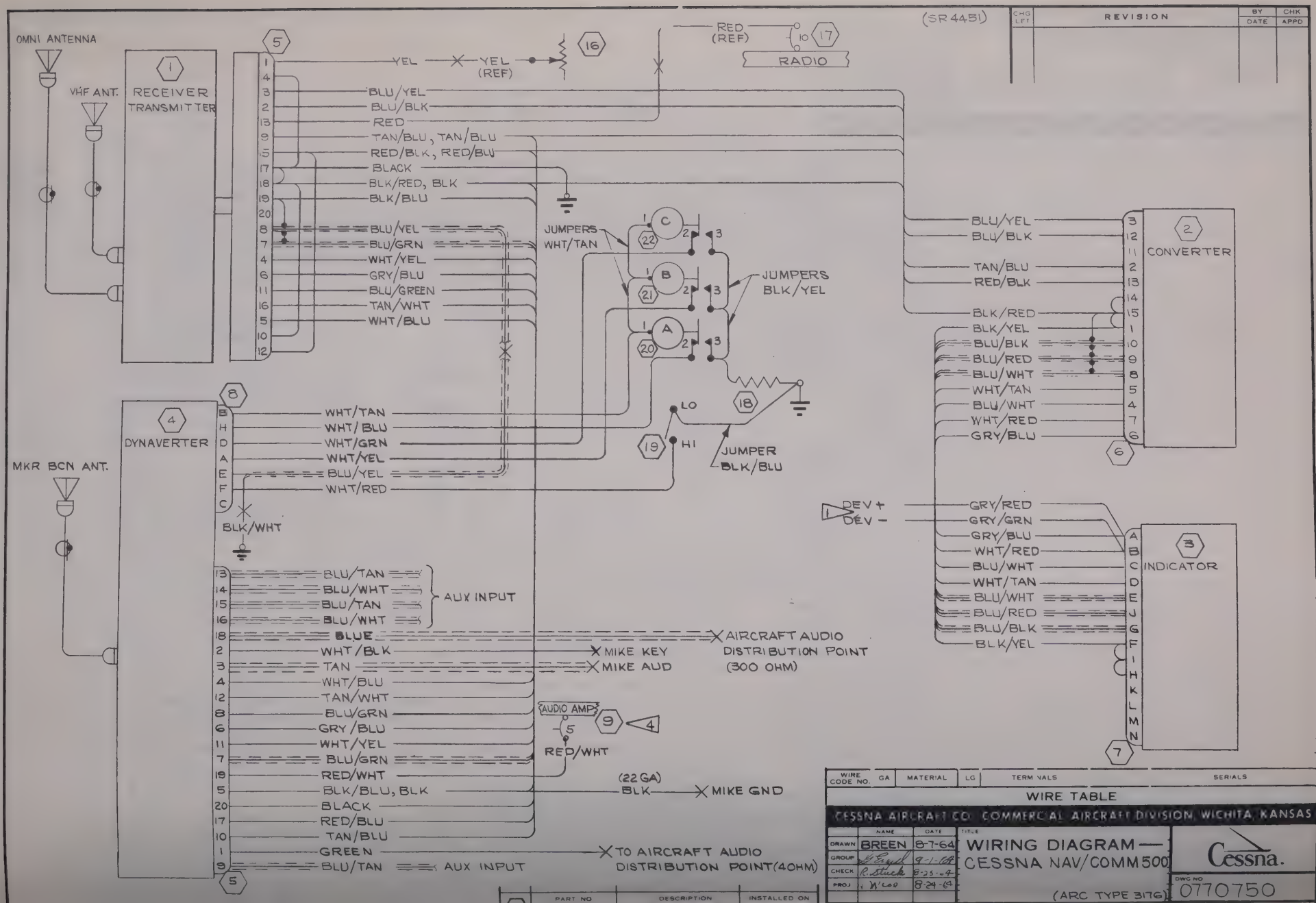
(SR 4451)
CHG LET
REVISION
BY
DATE
CHK
APPD
OMNI ANTENNA
VHF ANT.
1 RECEIVER TRANSMITTER
5
YEL
YEL (REF)
16
RED (REF)
10
17
RADIO
BLU/YEL
BLU/BLK
RED
TAN/BLU, TAN/BLU
RED/BLK, RED/BLU
BLACK
BLK/RED, BLK
BLK/BLU
BLU/YEL
BLU/GRN
WHT/YEL
GRY/BLU
BLU/GREEN
TAN/WHT
WHT/BLU
JUMPERS WHT/TAN
C
22
B
21
A
20
JUMPERS BLK/YEL
BLU/YEL
BLU/BLK
TAN/BLU
RED/BLK
BLK/RED
BLK/YEL
BLU/BLK
BLU/RED
BLU/WHT
WHT/TAN
BLU/WHT
WHT/RED
GRY/BLU
2 CONVERTER
6
8
4 DYNAVERTER
WHT/TAN
WHT/BLU
WHT/GRN
WHT/YEL
BLU/YEL
WHT/RED
LO
18
19
HI
JUMPER BLK/BLU
MKR BCN ANT.
BLK/WHT
DEV +
DEV –
GRY/RED
GRY/GRN
GRY/BLU
WHT/RED
BLU/WHT
WHT/TAN
BLU/WHT
BLU/RED
BLU/BLK
BLK/YEL
3 INDICATOR
7
BLU/TAN
BLU/WHT
BLU/TAN
BLU/WHT
AUX INPUT
BLUE
AIRCRAFT AUDIO DISTRIBUTION POINT (300 OHM)
WHT/BLK
MIKE KEY
TAN
MIKE AUD
WHT/BLU
TAN/WHT
BLU/GRN
GRY/BLU
WHT/YEL
BLU/GRN
AUDIO AMP
9
4
5
RED/WHT
RED/WHT
(22 GA) BLK
MIKE GND
BLK/BLU, BLK
BLACK
RED/BLU
TAN/BLU
GREEN
TO AIRCRAFT AUDIO DISTRIBUTION POINT (40HM)
BLU/TAN
AUX INPUT
5
PART NO
DESCRIPTION
INSTALLED ON
WIRE CODE NO.
GA
MATERIAL
LG
TERM VALS
SERIALS
WIRE TABLE
CESSNA AIRCRAFT CO COMMERCIAL AIRCRAFT DIVISION, WICHITA, KANSAS
NAME
DATE
DRAWN
BREEN
8-7-64
GROUP
CHECK
R. Stuck
8-25-64
PROJ
M'Coo
8-24-64
TITLE
WIRING DIAGRAM — CESSNA NAV/COMM 500
(ARC TYPE 317G)
Cessna.
DWG NO
0770750

| LET | | DATE | APPD |
|---|---|---|---|
| A | REMOVED YELLOW WIRE FROM PIN 3 OF 26795. ADD BLACK WIRE FROM PIN 3 TO GND ADD WIRE FROM PIN 11 OF 26795 TO RHEOSTAT. (SR4451) | G L W 9-22-64 | |
| | TAN/YEL WIRE SOLDER WAS S-367-1-E; BLK/BLU WIRE S 367-1-E WAS SOLDER (ACTIVATED CWG SR4611) | | |

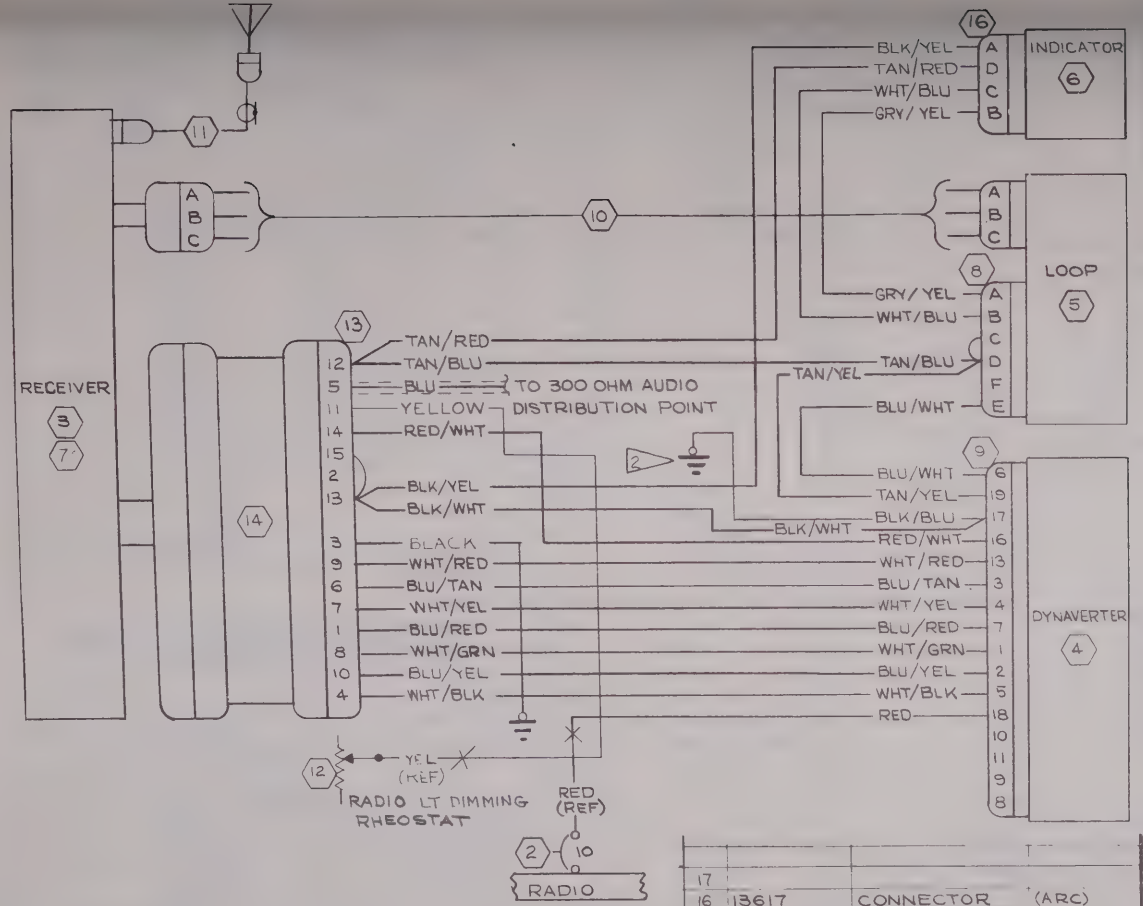


INACTIVE EFF THRU SER 18256704

| | | | | | |
|---|---|---|---|---|---|
| BLACK | 18 | -18-0 | | S-1367-1-8 | SOLDER |
| YELLOW | 18 | -18-4 | | S-1370-1 | SOLDER |
| BLUE | | S-1461-22-6 | | | |
| BLK/WHT | 18 | -18-0-9 | | SOLDER | |
| TAN/RED | 22 | -22-10-2 | | | |
| BLK/YEL | 22 | -22-0-4 | | | |
| GRY/YEL | 22 | -22-8-4 | | | |
| WHT/BLU | 22 | -22-9-6 | | | |
| TAN/BLU | 22 | -22-10-6 | | SOLDER | |
| RED | 16 | -16-2 | | S-1370-2 | |
| WHT/BLK | 22 | -22-9-0 | | SOLDER | |
| BLU/YEL | 22 | -22-6-4 | | | |
| WHT/GRN | 22 | -22-9-5 | | | |
| BLU/RED | 22 | -22-6-2 | | | |
| WHT/YEL | 22 | -22-9-4 | | | |
| BLU/TAN | 22 | -22-6-10 | | | |
| WHT/RED | 22 | -22-9-2 | | | |
| RED/WHT | 18 | -18-2-9 | | | SOLDER |
| BLK/BLU | 22 | -22-0-6 | | | S-1367-1-8 |
| TAN/YEL | 22 | -22-10-4 | | | SOLDER |
| BLU/WHT | 22 | -22-6-9 | | SOLDER | SOLDER |
| WIRE CODE NO | GA | MATERIAL | EQ | TERMINALS | SERIALS |

WIRE TABLE

NOTES:
1. INDICATOR & LOOP CONNECTIONS SHOWN ARE FOR TOP MOUNTED LOOP & SENSE ANTENNA.
2. BLK/BLU WIRE TO BE GROUNDED TO AIRFRAME NEAR LOOP BUT NOT CONNECTED TO LOOP.
3. ALL WIRE MATERIAL PER S-1460 EXCEPT AS SHOWN.

| ITEM NO | PART NO. | DESCRIPTION | INSTALLED ON |
|---|---|---|---|
| 17 | | | |
| 16 | 13617 | CONNECTOR | (ARC) |
| 15 | | | |
| 14 | 27859 | FILTER ASSY | (ARC) |
| 13 | 26795 | CONNECTOR | (ARC) |
| 12 | R-12½-75-RS34 | RHEOSTAT (TRTA) | |
| 11 | 18637 | SENSE ANT. CABLE | (ARC) |
| 10 | 17985 | LOOP CABLE ASSY | (ARC) |
| 9 | 27881 | CONNECTOR | (ARC) |
| 8 | 19062 | CONNECTOR | (ARC) |
| 7 | 33230-1000 | RECEIVER (WITHOUT BFO) | (ARC R-318G-10) |
| 6 | 27500 | INDICATOR | (ARC IN-318A-1) |
| 5 | 18000 | LOOP | (ARC -11) |
| 4 | 26969-0014 | DYNAVERTER | (ARC TYPE DV-318A) |
| 3 | 33230-1200 | RECEIVER (WITH BFO) | (ARC TYPE R-318G-2) |
| 2 | S-1360-10 | CIRCUIT BREAKER | |
| 1 | | | |

EQUIPMENT TABLE

CESSNA AIRCRAFT CO., COMMERCIAL AIRCRAFT DIVISION, WICHITA, KANSAS

| | NAME | DATE |
|---|---|---|
| DRAWN | BREEN | 8-10-64 |
| GROUP | | |
| CHECK | | 8-24-64 |
| PROJ | | |

TYPE: WIRING DIAGRAM — CESSNA ADF 500 (ARC TYPE 318G)

Cessna.

DWG NO 0770750

| SUPERSEDED BY | SUPERSEDES | MODEL | REV | PAGE |
|---|---|---|---|---|
| 0770750 PAGE 2.29.1 | 1270705 PAGE 17.2.1 | 182 | B | 2.15.1 |

FORM NO 80-161

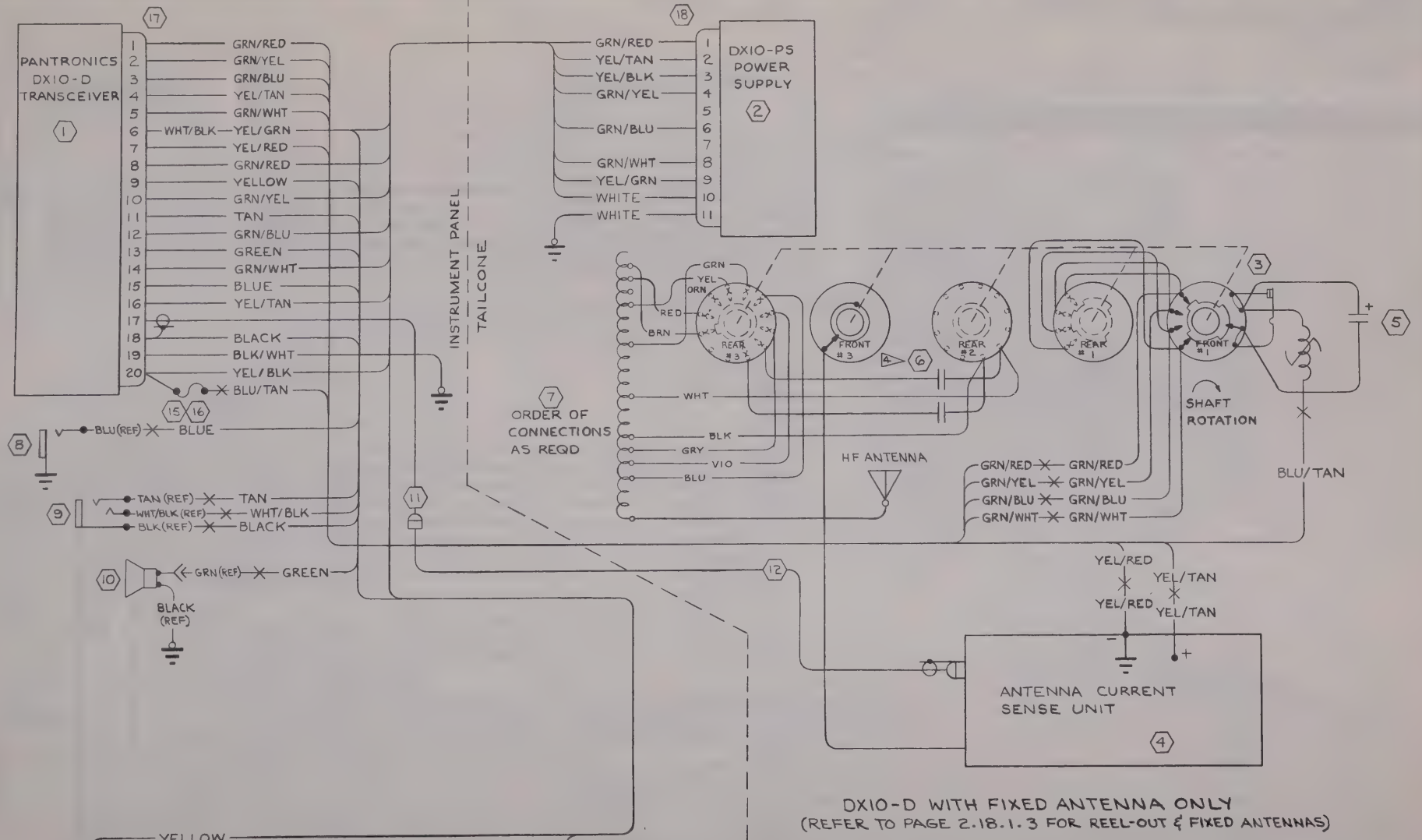


DX10-D WITH FIXED ANTENNA ONLY
(REFER TO PAGE 2.18.1.3 FOR REEL-OUT & FIXED ANTENNAS)

CESSNA AIRCRAFT CO. COMMERCIAL AIRCRAFT DIVISION WICHITA, KANSAS

| | NAME | DATE |
|---|---|---|
| DRAWN | RIDDER | 9-3-64 |
| GROUP | | 11-17-64 |
| CHECK | R. Stone | 11-13-64 |
| PROJ | H Wise | 11-12-64 |

SUPERSEDED BY:

TITLE: WIRING DIAGRAM-PANTRONICS DX10-D H F TRANSCEIVER INSTALLATION

Cessna.

DWG NO 0770750

REV:

SUPERSEDES: PAGE MODEL 182

PAGE 2.18.1.2

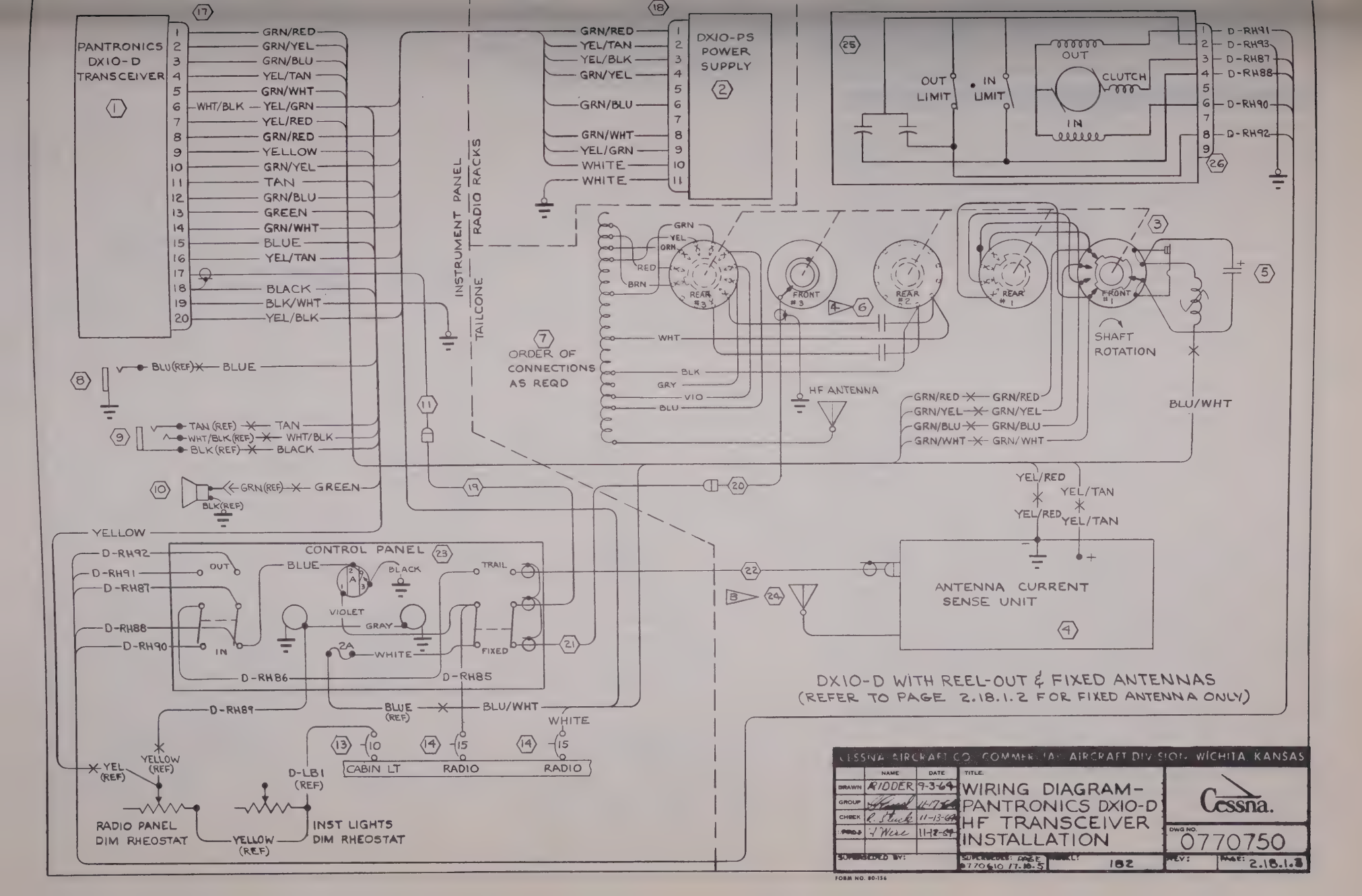
PANTRONICS DX10-D TRANSCEIVER
DX10-PS POWER SUPPLY
INSTRUMENT PANEL
RADIO RACKS
TAILCONE
ORDER OF CONNECTIONS AS REQD
HF ANTENNA
SHAFT ROTATION
OUT LIMIT
IN LIMIT
OUT
CLUTCH
IN
CONTROL PANEL
ANTENNA CURRENT SENSE UNIT
CABIN LT
RADIO
RADIO
RADIO PANEL DIM RHEOSTAT
INST LIGHTS DIM RHEOSTAT
DX10-D WITH REEL-OUT & FIXED ANTENNAS
(REFER TO PAGE 2.18.1.2 FOR FIXED ANTENNA ONLY)
CESSNA AIRCRAFT CO. COMMERCIAL AIRCRAFT DIVISION WICHITA KANSAS
WIRING DIAGRAM-PANTRONICS DX10-D HF TRANSCEIVER INSTALLATION
Cessna.
DWG NO. 0770750
182
2.18.1.3
FORM NO. 80-156

(SR4451)

| CHG LET | REVISION | BY DATE | CHK APPD |
|---|---|---|---|
| | | | |

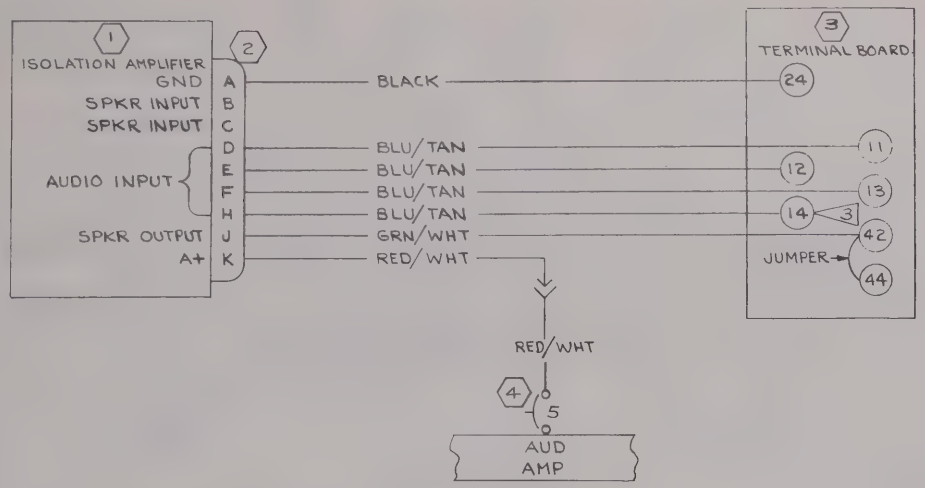


Inactive (EARLY 1966 & ON)
(SR4938) & ON
GLW 10-26-65
H & W 11-24-65
RPS 11-30-65

NOTES:
1. WIRE MATERIAL PER S-1460.
2. CONNECTOR IS FURNISHED WITH KA-10 AMP.
3. WHEN MKR BCN (ARC R-502B) IS INSTL, BLUE/TAN WIRE CONNECTS TO TERMINAL 15 ON TERMINAL BOARD.
4. TERMINAL BLOCK NUMBERS TO BE STAMPED ON WIRE PER CES 1015.

| WIRE CODE NO | GA | MATERIAL | LG | TERMINALS | | SERIALS |
|---|---|---|---|---|---|---|
| RED/WHT | 18 | -18-2-9 | | S-341-2 | S-1367-1-6 | |
| RED/WHT | 18 | -18-2-9 | | SOLDER | S-341-2 | |
| GRN/WHT | 20 | -20-5-9 | | SOLDER | S-1367-1-8 | |
| BLU/TAN | 22 | -22-6-10 | | SOLDER | S-1367-1-8 | |
| BLU/TAN | 22 | -22-6-10 | | SOLDER | S-1367-1-8 | |
| BLU/TAN | 22 | -22-6-10 | | SOLDER | S-1367-1-8 | |
| BLU/TAN | 22 | -22-6-10 | | SOLDER | S-1367-1-8 | |
| BLACK | 22 | -22-0 | | SOLDER | S-1367-1-8 | |

1 WIRE TABLE

| ITEM NO | PART NO | DESCRIPTION | INSTALLED ON |
|---|---|---|---|
| 4 | S-1360-5 | CIRCUIT BREAKER | |
| 3 | 0770714-1 | TERMINAL BOARD | |
| 2 | 126-222 | CONNECTOR (AMBE) | |
| 1 | KA-10 | ISOLATION AMP | (KG) |

EQUIPMENT TABLE

CESSNA AIRCRAFT CO. COMMERCIAL AIRCRAFT DIVISION WICHITA KANSAS

| | NAME | DATE |
|---|---|---|
| DRAWN | RIDDER | 9-18-64 |
| GROUP | | 10-6-64 |
| CHECK | | 9-28-64 |
| PROJ | | 9-28-64 |

TITLE: WIRING DIAGRAM — KING KA-10 ISOLATION AMPLIFIER

Cessna.

DWG NO 0770750

SUPERSEDED BY | SUPERSEDES | MODEL 182 | REV | PAGE 3-18

NOTES:
1. ITEMS 6, 7, & 8 ARE SUPPLIED AS PART OF KN-60 INSTL KIT NO. 050-1052-00.

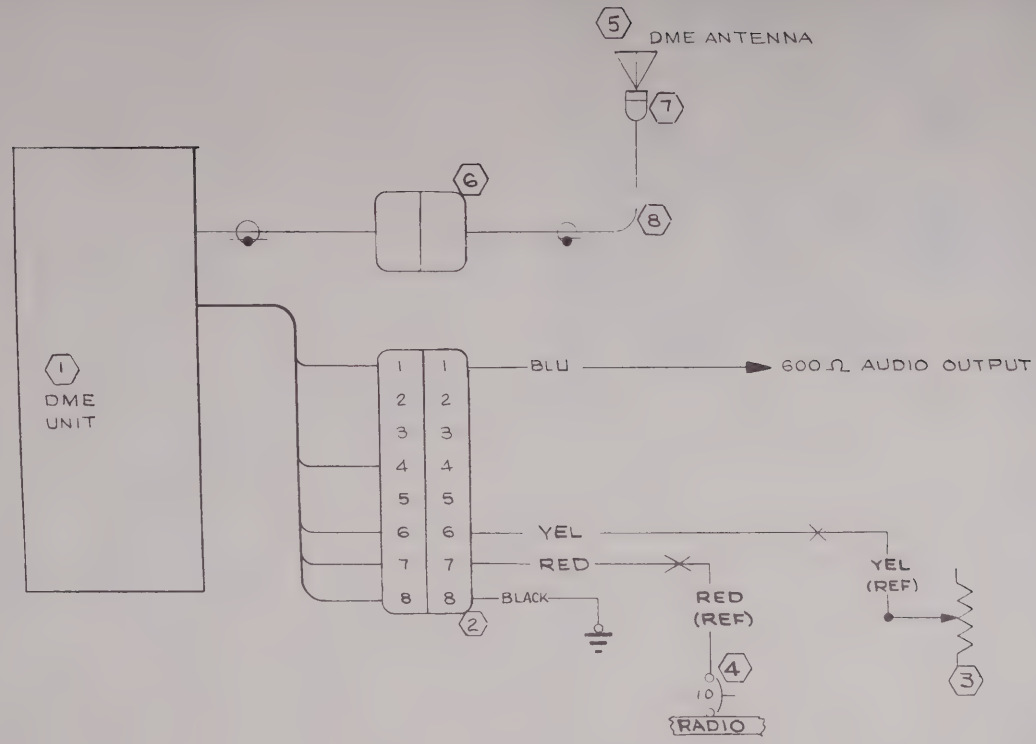


| | | | | | | | |
|---|---|---|---|---|---|---|---|
| BLU | 22 | -22-6 | | SOLDER | | | |
| RED | 16 | -16-2 | | | S-1370-2 | | |
| YEL | 18 | -18-4 | | | S-1370-1 | | |
| BLACK | 16 | -16-0 | | SOLDER | S-1367-2-8 | | |
| WIRE CODE NO | GA | MATERIAL | LG | TERMINALS | | | SERIALS |

WIRE TABLE

| ITEM NO | PART NO | DESCRIPTION | INSTALLED ON |
|---|---|---|---|
| 8 | 024-0001-00 | R.F. CABLE (KG) | |
| 7 | 030-24-00 | CONNECTOR RT ANGLE (KG) | |
| 6 | 030-0021-01 | CONNECTOR (KG) | |
| 5 | KA-15 | ANTENNA (KG) | |
| 4 | S-1360-10 | CIRCUIT BKR | |
| 3 | R-12½-75-RS34 | RHEOSTAT (TRTA) | |
| 2 | 030-2043-00 | CONNECTOR (KG) | |
| 1 | KN-60 | DME UNIT (KG) | |

EQUIPMENT TABLE

CESSNA AIRCRAFT CO. COMMERCIAL AIRCRAFT DIVISION WICHITA, KANSAS

| | NAME | DATE |
|---|---|---|
| DRAWN | BREEN | 9-30-64 |
| GROUP | [illegible] | 11-4-64 |
| CHECK | R. Stuck | 11-20-64 |
| PROJ | H Wise | 11-2-64 |

TITLE: WIRING DIAGRAM — KING KN-60 DME

Cessna.

DWG NO. 0770750

SUPERSEDED BY | SUPERSEDES | MODEL: 182 | REV: | PAGE: 2.20.1

FORM NO. 80-161

NOTES:

1. ALL WIRE MATERIAL PER S-1460 EXCEPT AS NOTED.
2. THE LEDEX SWITCH IS TO BE WIRED SO ALL FREQUENCIES 8.0 MC & HIGHER ARE ON REAR NO. 3 WAFER AND BELOW 8.0 MC ARE ON REAR NO. 4 WAFER. THE SHORTING JUMPERS ON REAR NO. 2 WAFER ARE TO BE ADJUSTED ACCORDINGLY.

| CHG LET | REVISION | BY / DATE | CHK / APPD |
|---|---|---|---|
| A | TITLE WAS CESSNA HF COMM 300, CHG DWG TO AGREE, 17013 WAS 33341, 17005 WAS 33390, 39032 WAS 32270-1014, 39033 WAS 32280-0014, 39001 WAS 32739-0100. ADD CH-1 THRU CH-10 & LO COM & HI-COM TO W/T (SR4762) | 228 / 225 65 | [illegible] |
| B | ADD NOTE 2 | GLW 7-15-65 | [illegible] |
| C | AGA-3 FUSE WAS AGA-2 REPOSITIONED WIPER ON 126103-001 SWITCH ASSY & ADDED ℄ | GLW 10-11-65 | [illegible] |

| WIRE CODE NO. | GA | MATERIAL | LG | TERMINALS | | | SERIALS |
|---|---|---|---|---|---|---|---|
| HI-COM | | BELDEN 8899 | | SOLDER | 235-860 CLIP (JON) | | |
| LO-COM | | | | | | | |
| CH-10 | | | | | | | |
| CH-9 | | | | | | | |
| CH-8 | | | | | | | |
| CH-7 | | | | | | | |
| CH-6 | | | | | | | |
| CH-5 | | | | | | | |
| CH-4 | | | | | | | |
| CH-3 | | | | | | | |
| CH-2 | | | | | | | |
| CH-1 | | BELDEN 8899 | | | 235-860 CLIP (JON) | | |
| YEL/RED | 20 | -20-4-2 | | | S-1367-1-8 | | |
| YEL/TAN | 20 | -20-4-10 | | SOLDER | | | |
| RED/YEL | 22 | -22-2-4 | | S-1370-0 | S-1370-0 | | |
| GRY/BLK | 22 | -22-8-0 | | SOLDER | | | |
| GRY/YEL | 22 | -22-8-4 | | | | | |
| GRY/BLU | 22 | -22-8-6 | | | | | |
| GRY/TAN | 22 | -22-8-10 | | | | | |
| WHT/BLK | 22 | -22-9-0 | | | | | |
| YEL/BLK | 18 | -18-4-0 | | | SOLDER | | |
| TAN | 22 | -22-10 | | | | | |
| WHITE | 14 | -14-9 | | | S-1367-2-6 | | |
| GRY/TAN | 22 | -22-8-10 | | | S-1370-0 | | |
| GRY/BLU | 22 | -22-8-6 | | | | | |
| GRY/YEL | 22 | -22-8-4 | | | | | |
| GRY/BLK | 22 | -22-8-0 | | | | | |
| YEL/TAN | 20 | -20-4-10 | | | S-1370-0 | | |
| BLK/WHT | 18 | -18-0-9 | | | S-1367-1-8 | | |
| RED/YEL | 22 | -22-2-4 | | | S-1370-0 | | |
| GREEN | 20 | -20-5 | | | | | |
| BLUE | 22 | -22-6 | | | | | |
| YELLOW | 18 | -18-4 | | | | | |
| YEL/RED | 20 | -20-4-2 | | | SOLDER | | |
| GRN/YEL | 20 | -20-5-4 | | | | | |
| YEL/GRN | 20 | -20-4-5 | | | | | |
| GRN/WHT | 20 | -20-5-9 | | | | | |
| YEL/BLK | 18 | -18-4-0 | | | | | |
| WHT/BLK | 22 | -22-9-0 | | | | | |
| WHITE | 20S | S-1535-20-9 | | SOLDER | SOLDER | | |

1 WIRE TABLE

CESSNA AIRCRAFT CO., COMMERCIAL AIRCRAFT DIVISION, WICHITA, KANSAS

| | NAME | DATE | TITLE |
|---|---|---|---|
| | GREEN | [illegible] | WIRING DIAGRAM |

| | | | |
|---|---|---|---|
| 24 | S-1360-15 | CIRCUIT BREAKER | |
| 23 | PL-112 | CONNECTOR | |
| 22 | UG-491A/U | ADAPTER | |
| 21 | SP-10010 | REEL ASSY | (STAA) |
| 20 | AGA-3 | FUSE | (BUS) |
| 19 | HIF | FUSE HOLDER | (BUS) |
| 18 | 30D192A1 | CAPACITOR | (SPR) |
| 17 | 126103-001 | SWITCH ASSY | (LGHI) |
| 16 | 08 2509-24 | COIL ASSY | |
| 15 | 0770727-1 | COIL ASSY | |
| 14 | 17013 | CONNECTOR | (PNTR) |
| 13 | 17005 | CONNECTOR | (PNTR) |
| 12 | -230 | CABLE & CONT PANEL ASSY | |
| 11 | -616 | ANT. INSTL (HI BAND) | |
| 10 | -613 | ANT. INSTL (LO BAND) | |
| 9 | -415 | REEL ANT | |
| 8 | -237 | CABLE ASSY | |
| 7 | -229 | CABLE ASSY | |
| 6 | -228 | CABLE ASSY | |
| 5 | -226 | CABLE ASSY | |
| 4 | -224 | CABLE ASSY | |

SEE PG. 2.21.1

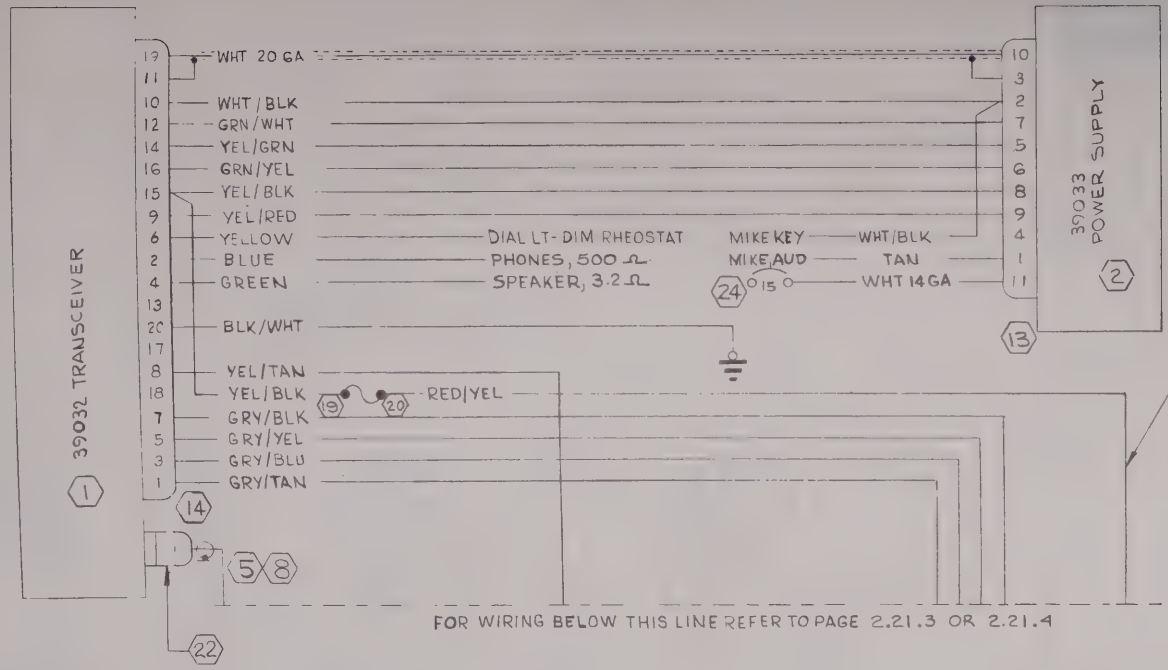


FOR WIRING BELOW THIS LINE REFER TO PAGE 2.21.3 OR 2.21.4

| WIRE CODE NO | GA | MATERIAL | LG | TERMINALS | | SERIALS |
|---|---|---|---|---|---|---|
| | | | | | | |

WIRE TABLE

| ITEM NO | PART NO. | DESCRIPTION | INSTALLED ON |
|---|---|---|---|
| | | | |

EQUIPMENT TABLE

CESSNA AIRCRAFT CO. COMMERCIAL AIRCRAFT DIVISION, WICHITA KANSAS

| | NAME | DATE |
|---|---|---|
| DRAWN | G WOOD | 10-16-64 |
| GROUP | [illegible] | 11-17-64 |
| CHECK | R Stuck | 11-11-64 |
| PROJ | H. Weir | 11-17-64 |

TITLE: WIRING DIAGRAM — PANTRONICS DX10-DA

Cessna.

DWG NO. 0770750

| SUPERSEDED BY | SUPERSEDES | MODEL | REV | PAGE |
|---|---|---|---|---|
| | | 182 | A | 2.21.2 |

| CHG LET | REVISION | BY / DATE | CHK / APPD |
|---|---|---|---|
| | SEE PG. 2.21.1 | | |

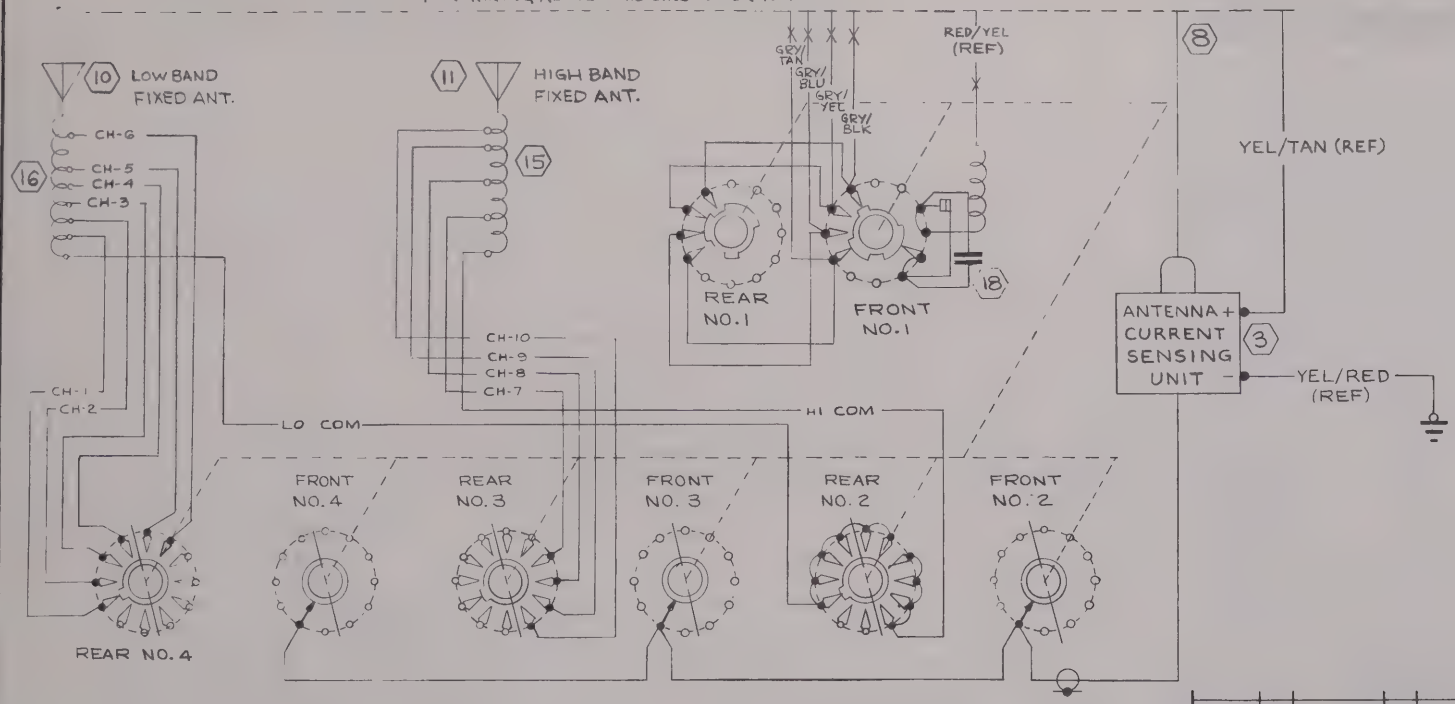


17 SWITCH
(SHOWN IN CHANNEL 1 POS)
(WAFFERS SHOWN AS VIEWED FROM MOTOR SIDE)

| WIRE CODE NO. | GA | MATERIAL | LG | TERMINALS | | SERIALS |
|---|---|---|---|---|---|---|

WIRE TABLE

CESSNA AIRCRAFT CO. COMMERCIAL AIRCRAFT DIVISION, WICHITA, KANSAS

| | NAME | DATE |
|---|---|---|
| DRAWN | G WOOD | 10-7-64 |
| GROUP | [illegible] | 11-17-64 |
| CHECK | [illegible] | 11-11-64 |
| PROJ | [illegible] | 11-16-64 |

TITLE: WIRING DIAGRAM — PANTRONICS DX10-DA

Cessna.

DWG NO. 0770750

| ITEM | PART NO | DESCRIPTION | INSTALLED ON |
|---|---|---|---|

SUPERSEDED BY | SUPERSEDES | MODEL | REV | PAGE

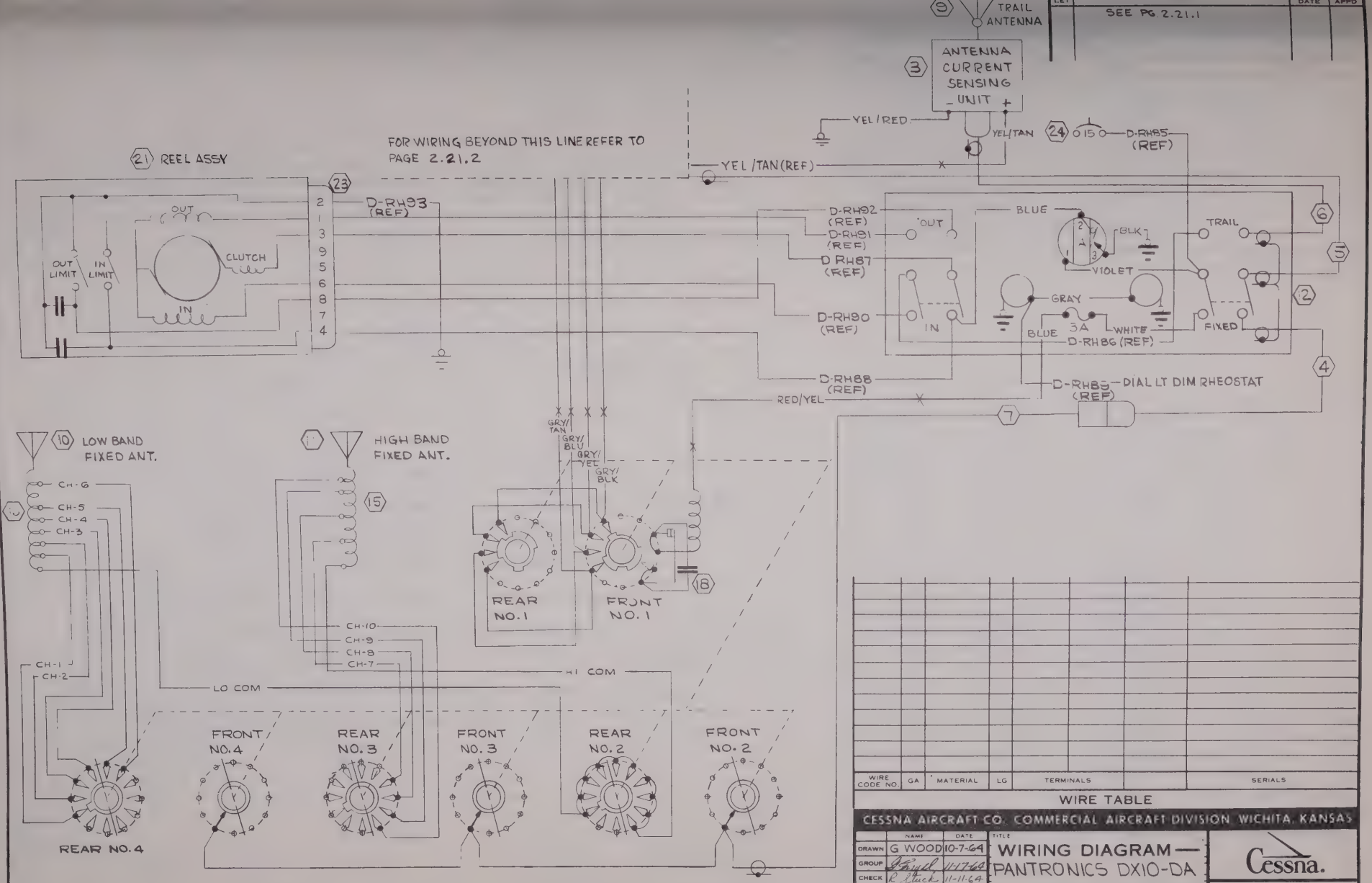


| WIRE CODE NO. | GA | MATERIAL | LG | TERMINALS | SERIALS |
|---|---|---|---|---|---|

WIRE TABLE

| ITEM NO | PART NO. | DESCRIPTION | INSTALLED ON |
|---|---|---|---|

EQUIPMENT TABLE

CESSNA AIRCRAFT CO. COMMERCIAL AIRCRAFT DIVISION WICHITA, KANSAS

| | NAME | DATE |
|---|---|---|
| DRAWN | G WOOD | 10-7-64 |
| GROUP | [illegible] | 11-17-64 |
| CHECK | R Tuck | 11-11-64 |
| PROJ | H Ware | 11-9-64 |

TITLE: WIRING DIAGRAM — PANTRONICS DX10-DA

Cessna.

DWG NO. 0770750

| SUPERSEDED BY | SUPERSEDES | MODEL | REV: | PAGE: |
|---|---|---|---|---|
| | | 182 | C | 2.21.4 |

FORM NO. 80-161

| CHG LET | REVISION | BY / DATE | CHK / APPD |
|---|---|---|---|
| A | KX-150B & KX-150BE WAS KX-150A & KX-150AE. ADD NOTE 2. (SR 4731) | GLW 1-23-65 | [illegible] |

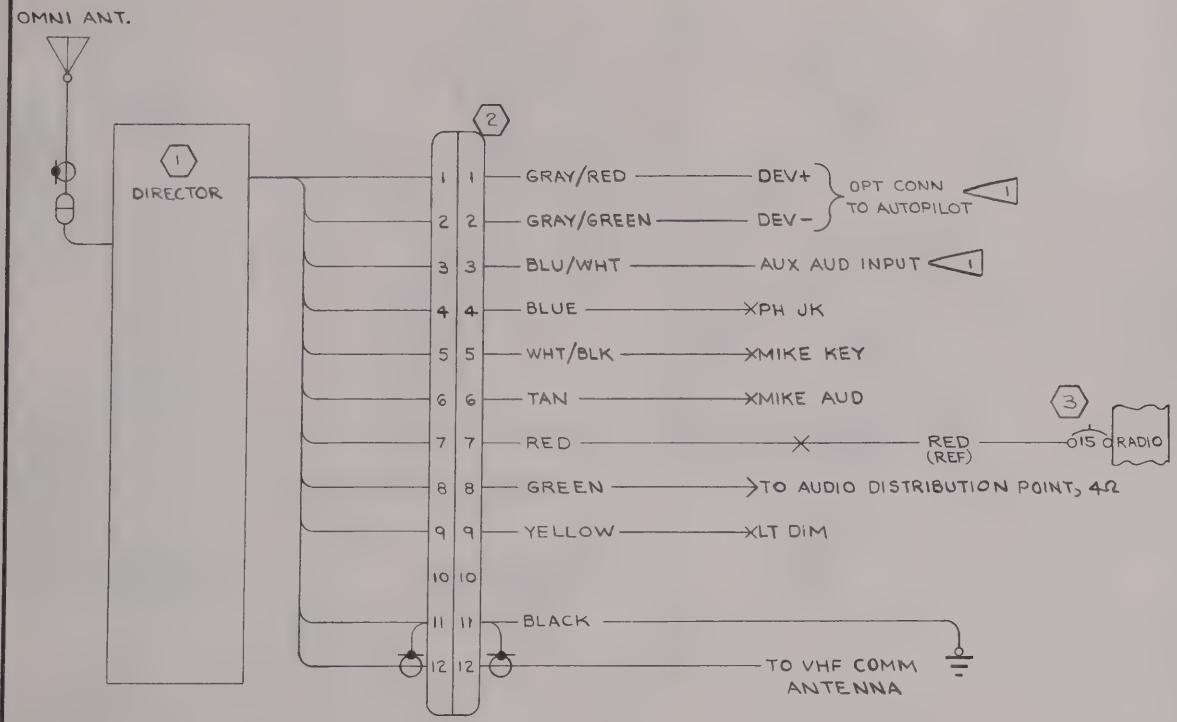


NOTES:

1. S-1557-1 CAP REPLACED WITH S-1367-1-8 TERMINAL WHEN COMBINED WITH OTHER RADIOS.
2. THE KX-150B & KX-150BE ARE ELECTRICALLY & MECHANICALLY INTERCHANGEABLE WITH KX-150A & KX-150AE.

| WIRE CODE NO. | GA | MATERIAL | LG | TERMINALS | | SERIALS |
|---|---|---|---|---|---|---|
| GRY/RED | 22 | S-1460-22-8-2 | | SOLDER | S-1557-1 | |
| GRY/GRN | 22 | S-1460-22-8-5 | | | S-1557-1 | |
| BLU/WHT | 22 | S-1460-22-6-9 | | | S-1557-1 | |
| BLACK | 16 | S-1460-16-0 | | | S-1367-2-8 | |
| RED | 16 | S-1460-16-2 | | | S-1370-2 | |
| YELLOW | 18 | S-1460-18-4 | | | S-1370-1 | |
| WHT/BLK | 22 | S-1460-22-9-0 | | | S-1370-1 | |
| TAN | 22 | S-1460-22-10 | | | S-1370-1 | |
| GREEN | 20 | S-1460-20-5 | | | S-341-2 | |
| BLUE | 22 | S-1460-22-6 | | SOLDER | S-1370-1 | |

WIRE TABLE

CESSNA AIRCRAFT CO., COMMERCIAL AIRCRAFT DIVISION, WICHITA, KANSAS

| | NAME | DATE | TITLE |
|---|---|---|---|
| DRAWN | [illegible] | [illegible] | WIRING DIAGRAM |
| ENGR | [illegible] | [illegible] | |
| APPD | [illegible] | [illegible] | |

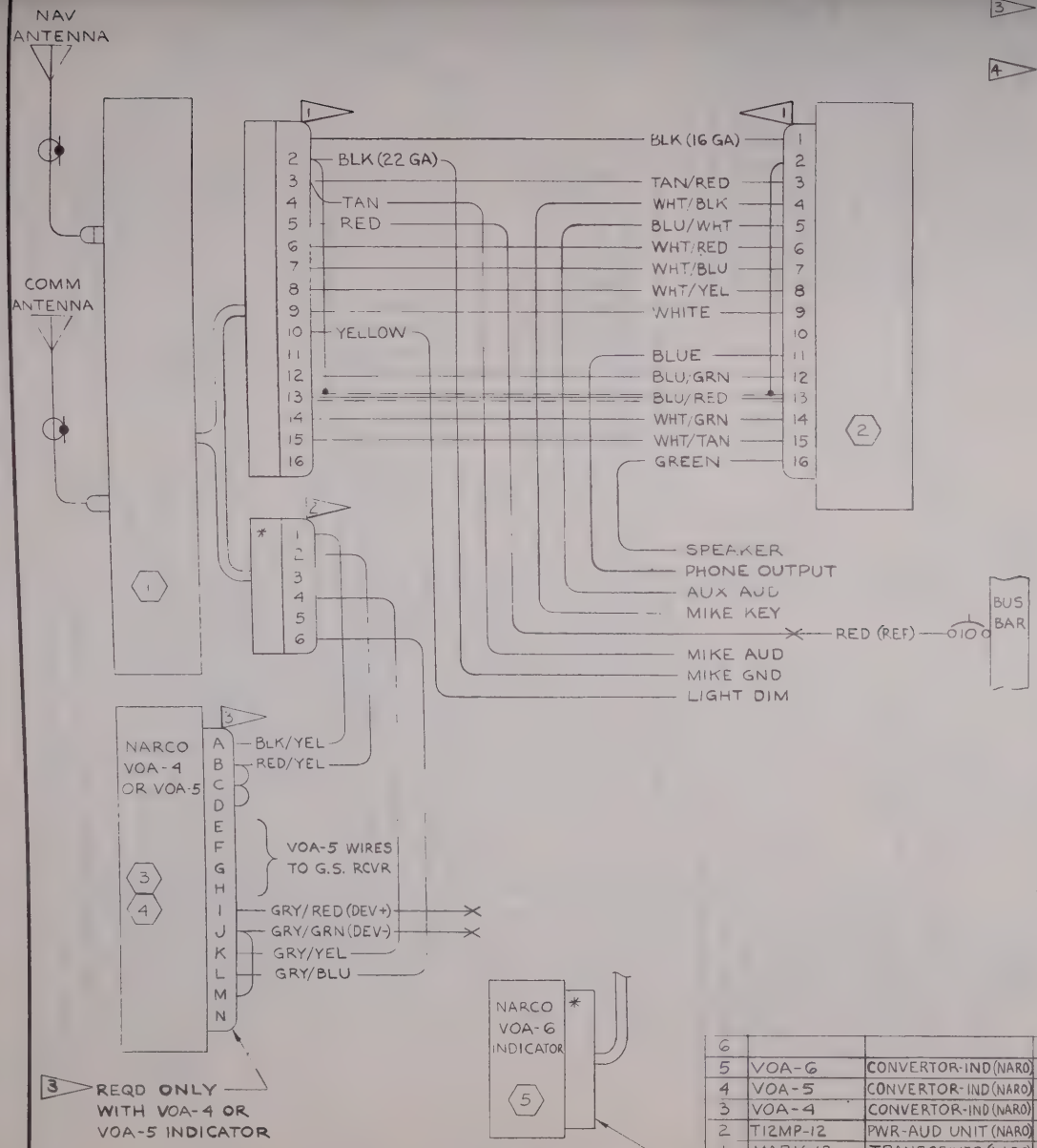


2 NARCO PLUG NO. K-41116-1 SUPPLIED WITH MARK 12 INSTL KIT.

3 MS310GA-20-27S PLUG & MS3057-12 CLAMP SUPPLIED WITH VOA-4 OR VOA-5 INDICATOR.

4 WIRE MATERIAL PER S-1460 EXCEPT AS NOTED.

| WIRE CODE NO | GA | MATERIAL | LG | TERMINALS | | SERIALS |
|---|---|---|---|---|---|---|
| GREEN | 20 | -20-5 | | SOLDER | | |
| GRY/BLU | 22 | -22-8-6 | | | SOLDER | |
| GRY YEL | 22 | -22-8-4 | | | SOLDER | |
| GRY/GRN | 22 | -22-8-5 | | | S-1557-1 | |
| GRY/RED | 22 | -22-8-2 | | | S-1557-1 | |
| RED/YEL | 22 | -22-2-4 | | | SOLDER | |
| BLK/YEL | 22 | -22-0-4 | | | SOLDER | |
| BLACK | 22 | -22-0 | | | | |
| TAN | 22 | -22-10 | | | | |
| WHT/TAN | 22 | -22-9-10 | | | SOLDER | |
| WHT/GRN | 22 | -22-9-5 | | | SOLDER | |
| BLU/RED | 22S | S-1961-22-6-2 | | | SOLDER | |
| BLU/GRN | 22 | -22-6-5 | | | SOLDER | |
| BLUE | 22 | -22-6 | | | | |
| WHT/YEL | 22 | -22-9-4 | | | SOLDER | |
| WHT/BLU | 22 | -22-9-6 | | | SOLDER | |
| WHT/RED | 22 | -22-9-2 | | | SOLDER | |
| BLU/WHT | 22 | -22-6-9 | | | S-1557-1 | |
| WHT/BLK | 22 | -22-9-0 | | | | |
| TAN/RED | 22 | -22-10-2 | | | SOLDER | |
| YELLOW | 18 | -18-4 | | | | |
| RED | 16 | -16-2 | | | S-1370-2 | |
| BLACK | 16 | -16-0 | | SOLDER | SOLDER | |
| WHITE | 14 | -14-9 | | SOLDER | SOLDER | |

4 WIRE TABLE

| ITEM NO | PART NO. | DESCRIPTION | INSTALLED ON |
|---|---|---|---|
| 6 | | | |
| 5 | VOA-6 | CONVERTOR-IND (NARO) | |
| 4 | VOA-5 | CONVERTOR-IND (NARO) | |
| 3 | VOA-4 | CONVERTOR-IND (NARO) | |
| 2 | T12MP-12 | PWR-AUD UNIT (NARO) | |
| 1 | MARK 12 | TRANSCEIVER (NARO) | |

EQUIPMENT TABLE

CESSNA AIRCRAFT CO., COMMERCIAL AIRCRAFT DIVISION, WICHITA, KANSAS

| | NAME | DATE |
|---|---|---|
| DRAWN | G WOOD | 12-8-64 |
| GROUP | Engel | 1-21-65 |
| CHECK | Zoogher | 1-13-65 |
| PROJ | H. Wall | 1-21-65 |

TITLE: WIRING DIAGRAM— NARCO MARK 12 WITH VOA-4, VOA-5 OR VOA-6

Cessna®

DWG NO: 0770750

SUPERSEDED BY:

SUPERSEDES: 0770610 PAGE 7.20

MODEL: 182

REV:

PAGE: 2.25.1

FORM NO 80-1614

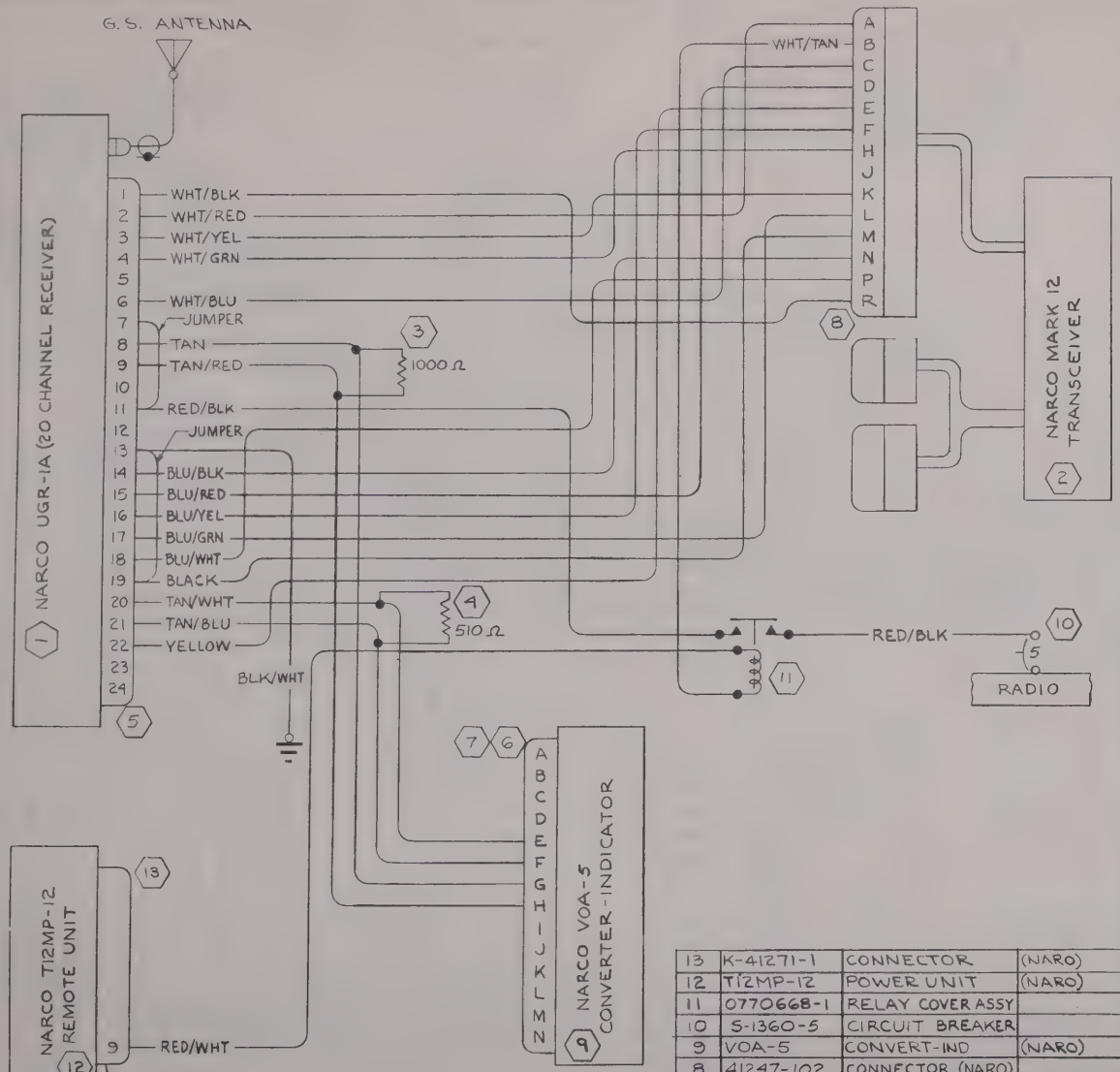


| CHG LET | REVISION | BY / DATE | CHK / APPD |
|---|---|---|---|
| | | | |

| WIRE CODE NO. | GA | MATERIAL | LG | TERMINALS | | SERIALS |
|---|---|---|---|---|---|---|
| TAN/BLU | 22 | S-1460-22-10-6 | | SOLDER | SOLDER | |
| TAN/WHT | 22 | S-1460-22-10-9 | | | | |
| BLACK | 22 | S-1460-22-0 | | | | |
| BLU/WHT | 22 | S-1460-22-6-9 | | | | |
| BLU/GRN | 22 | S-1460-22-6-5 | | | | |
| BLU/YEL | 22 | S-1460-22-6-4 | | | | |
| BLU/RED | 22 | S-1460-22-6-2 | | | | |
| BLU/BLK | 22 | S-1460-22-6-0 | | | | |
| TAN/RED | 22 | S-1460-22-10-2 | | | | |
| TAN | 22 | S-1460-22-10 | | | | |
| WHT/BLU | 22 | S-1460-22-9-6 | | | | |
| WHT/GRN | 22 | S-1460-22-9-5 | | | | |
| WHT/YEL | 22 | S-1460-22-9-4 | | | | |
| WHT/RED | 22 | S-1460-22-9-2 | | | | |
| WHT/BLK | 22 | S-1460-22-9-0 | | | | |
| WHT/TAN | 22 | S-1460-22-9-10 | | | | |
| RED/BLK | 18 | S-1460-18-2-0 | | | | |
| RED/WHT | 18 | S-1460-18-2-9 | | | | |
| YELLOW | 18 | S-1460-18-4 | | | SOLDER | |
| BLK/WHT | 18 | S-1460-18-0-9 | | | S-1367-1-8 | |
| RED/BLK | 18 | S-1460-18-2-0 | | SOLDER | S-1367-1-6 | |

WIRE TABLE

| ITEM NO | PART NO. | DESCRIPTION | INSTALLED ON |
|---|---|---|---|
| 13 | K-41271-1 | CONNECTOR | (NARO) |
| 12 | T12MP-12 | POWER UNIT | (NARO) |
| 11 | 0770668-1 | RELAY COVER ASSY | |
| 10 | S-1360-5 | CIRCUIT BREAKER | |
| 9 | VOA-5 | CONVERT-IND | (NARO) |
| 8 | 41247-102 | CONNECTOR (NARO) | |
| 7 | 41228-6 | CLAMP (NARO) | |
| 6 | 41223-2 | PLUG (NARO) | |
| 5 | 41246-1 | CONN ASSY (NARO) | |
| 4 | 510Ω ±5% ½ WATT | RESISTOR (OM) "LITTLE DEVIL" | |
| 3 | 1000Ω ±10% ½ WATT | RESISTOR (OM) "LITTLE DEVIL" | |
| 2 | MARK 12 | TRANSCEIVER | (NARO) |
| 1 | UGR-1A 20 CH | RECEIVER (NARO) | |

EQUIPMENT TABLE

CESSNA AIRCRAFT CO., COMMERCIAL AIRCRAFT DIVISION WICHITA, KANSAS

| | NAME | DATE |
|---|---|---|
| DRAWN | RIDDER | 11-21-64 |
| GROUP | [illegible] | 11-64 |
| CHECK | R. Stuck | 1-6-65 |
| PROJ | W. Wise | 1-5-65 |

TITLE: WIRING DIAGRAM — NARCO UGR-1A GLIDESLOPE WITH NARCO MARK 12 & VOA-5

Cessna.

DWG NO 0770750

REV

PAGE 3-36-1

SUPERSEDED BY

SUPERSEDES

PAGE

MODEL 182

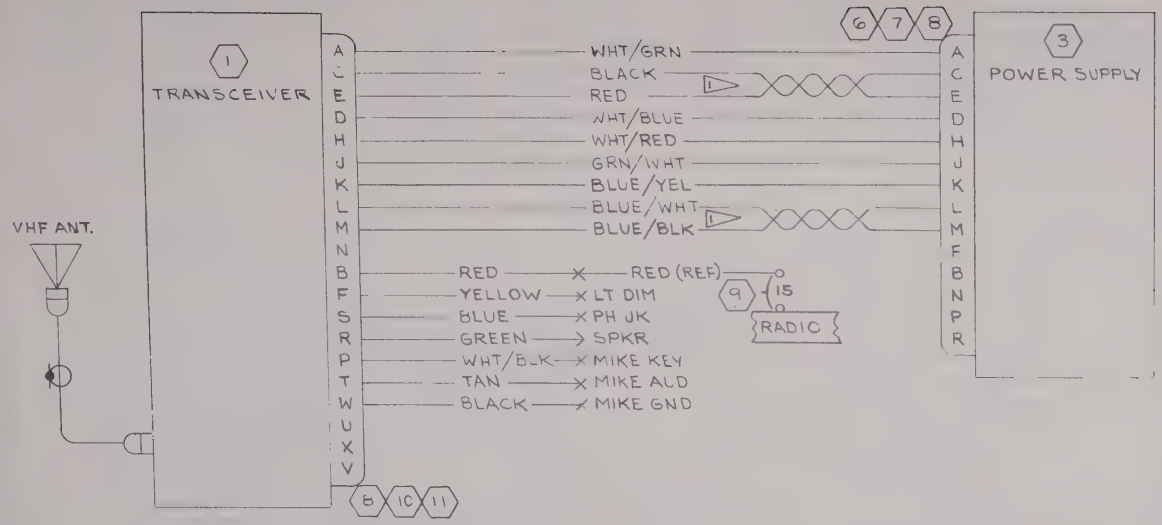


NOTES:

1. WIRES FLAGGED THUS TO BE TWISTED TOGETHER TO FORM A TWISTED PAIR.
2. WIRE MATERIAL PER S-1460.

| ITEM NO | PART NO. | DESCRIPTION | INSTALLED ON |
|---|---|---|---|
| 11 | 030-1010-00 | HOOD (KG) | |
| 10 | 030-2002-00 | RECEPTACLE (KG) | |
| 9 | S-136C-15 | CIRCUIT BREAKER | |
| 8 | 030-1008-00 | LEVER&PIVOT ASSY (KG) | |
| 7 | 030-1009-00 | HOOD (KG) | |
| 6 | 030-2000-00 | RECEPTACLE (KG) | |
| 5 | | | |
| 4 | | | |
| 3 | KS-5011 (A) | POWER SUPPLY (KG) | |
| 2 | | | |
| 1 | KY-95E | TRANSCEIVER (KG) | |

EQUIPMENT TABLE

| WIRE CODE NO. | GA | MATERIAL | LG | TERMINALS | | SERIALS |
|---|---|---|---|---|---|---|
| BLACK | 22 | -22-0 | | SOLDER | S-1370-1 | |
| TAN | 22 | -22-10 | | | S-1370-1 | |
| WHT/BLK | 22 | -22-9-0 | | | S-1370-1 | |
| GREEN | 20 | -20-5 | | | S-3412 | |
| BLUE | 22 | -22-6 | | | S-1370-1 | |
| YELLOW | 18 | -18-4 | | | S-1370-1 | |
| RED | 6 | -16-2 | | | S-1370-2 | |
| BLU/BLK | 22 | -22-6-0 | | | SOLDER | |
| BLU/WHT | 22 | -22-6-9 | | | | |
| BLU/YEL | 22 | -22-6-4 | | | | |
| GRN/WHT | 20 | -20-5-9 | | | | |
| WHT/RED | 22 | -22-9-2 | | | | |
| WHT/BLU | 22 | -22-9-6 | | | | |
| RED | 16 | -16-2 | | | | |
| BLACK | 16 | -16-0 | | | | |
| WHT/GRN | 22 | -22-9-5 | | SOLDER | SOLDER | |

2 WIRE TABLE

CESSNA AIRCRAFT CO., COMMERCIAL AIRCRAFT DIVISION, WICHITA, KANSAS

| | NAME | DATE |
|---|---|---|
| DRAWN | KIDDER | 12-11-64 |
| GROUP | | |
| CHECK | R Stark | 1-26-65 |
| PROJ | H Wise | 1-26-65 |

TITLE: WIRING DIAGRAM— KING KY-95E

Cessna

DWG NO: 0770750

SUPERSEDED BY:

SUPERSEDES: 0770610 PAGE 17.18.1

MODEL: 182

REV:

PAGE: 2.27.1

FORM NO 80-1611A

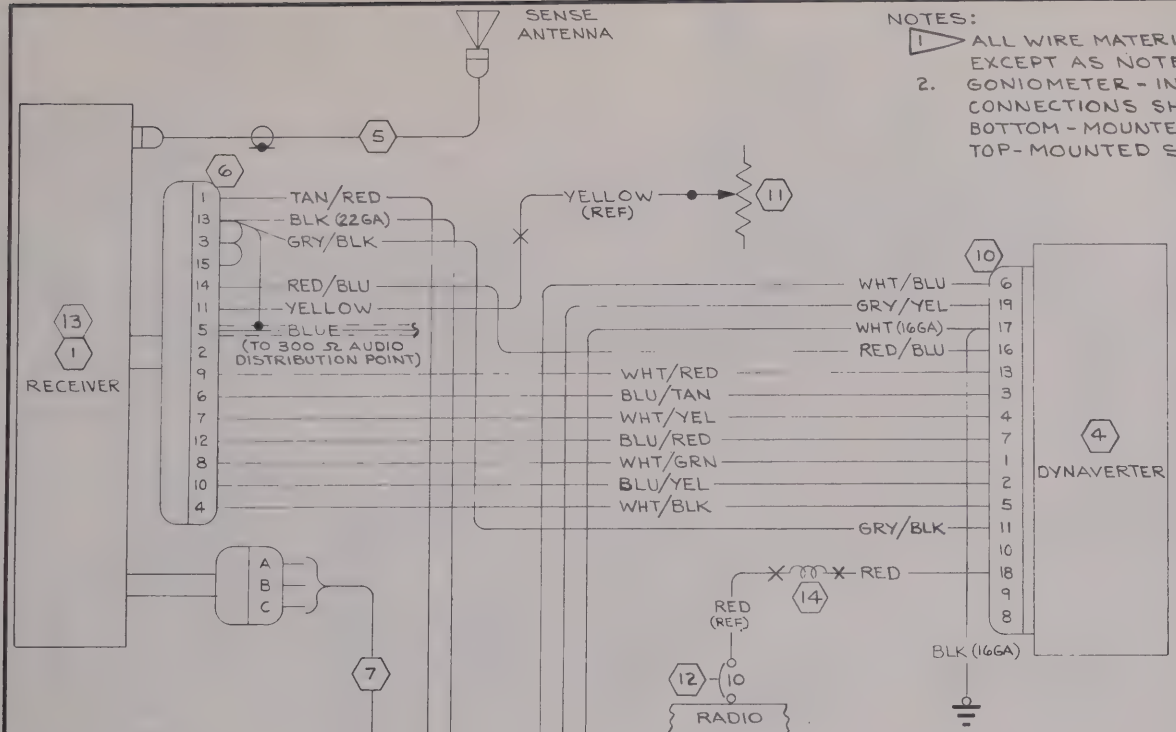


(SR4811)

NOTES:

1. ALL WIRE MATERIAL PER S-1460 EXCEPT AS NOTED.
2. GONIOMETER - INDICATOR & LOOP ANT. CONNECTIONS SHOWN ARE FOR BOTTOM - MOUNTED LOOP ANTENNA & TOP - MOUNTED SENSE ANTENNA.

| CHG LET | REVISION | BY / DATE | CHK / APPD |
|---|---|---|---|
| A | BLACK WIRE: WAS TO PINC ITEM 8 NOW TO PINK WAS 16GA NOW 22GA ADDED ITEM 14, A-263 CHOKE | | |

| | | | | | | |
|---|---|---|---|---|---|---|
| BLACK | 16 | -16-0 | | SOLDER | S-1367-2-8 | |
| RED | 16 | -16-2 | | | S-1370-2 | |
| WHT/BLK | 22 | -22-9-0 | | | SOLDER | |
| BLU/YEL | 22 | -22-6-4 | | | | |
| WHT/GRN | 22 | -22-9-5 | | | | |
| BLU/RED | 22 | -22-6-2 | | | | |
| WHT/YEL | 22 | -22-9-4 | | | | |
| BLU/TAN | 22 | -22-6-10 | | | | |
| WHT/RED | 22 | -22-9-2 | | | | |
| GRY/BLK | 22 | -22-8-0 | | | | |
| RED/BLU | 16 | -16-2-6 | | | SOLDER | |
| YELLOW | 20 | -20-4 | | | S-1370-1 | |
| BLUE | 22S | S-1461-22-6 | | | | |
| GRY/YEL | 22 | -22-8-4 | | | SOLDER | |
| TAN/RED | 22 | -22-10-2 | | | | |
| WHT/BLU | 22 | -22-9-6 | | | | |
| BLACK | 22 | -22-0 | | | | |
| WHITE | 16 | -16-9 | | | SOLDER | |
| BLU/BLK | 22 | -22-6-0 | | SOLDER | S-1367-1-8 | |
| WIRE CODE NO. | GA | MATERIAL | LG | TERMINALS | | SERIALS |

1 WIRE TABLE

| | | |
|---|---|---|
| 14 | A-263 | CHOKE (CTAT) |
| 13 | 33230-1200 | RCVR (WITH BFC) (ARC TYPE R-3186-12) |
| 12 | S-1360-10 | CIRCUIT BREAKER |
| 11 | R-12½-75-RS34 | RHEOSTAT (TRTA) |
| 10 | 27881 | CONNECTOR KIT (ARC) |
| 9 | 33827 | LOOP ANT. CABLE ASSY (ARC) |
| 8 | 33979 | CONNECTOR (ARC) |
| 7 | 33488-0001 | RECEIVER CABLE ASSY (ARC) |
| 6 | 26795 | CONNECTOR KIT (ARC) |
| 5 | 18637-0000 | SENSE ANT. CABLE ASSY (ARC) |
| 4 | 34660-0014 | DYNAVERTER (ARC TYPE DY-3184-1) |

CESSNA AIRCRAFT CO., COMMERCIAL AIRCRAFT DIVISION, WICHITA, KANSAS

| | NAME | DATE | TITLE |
|---|---|---|---|
| DRAWN | RIDDER | 4-3-65 | WIRING DIAGRAM |

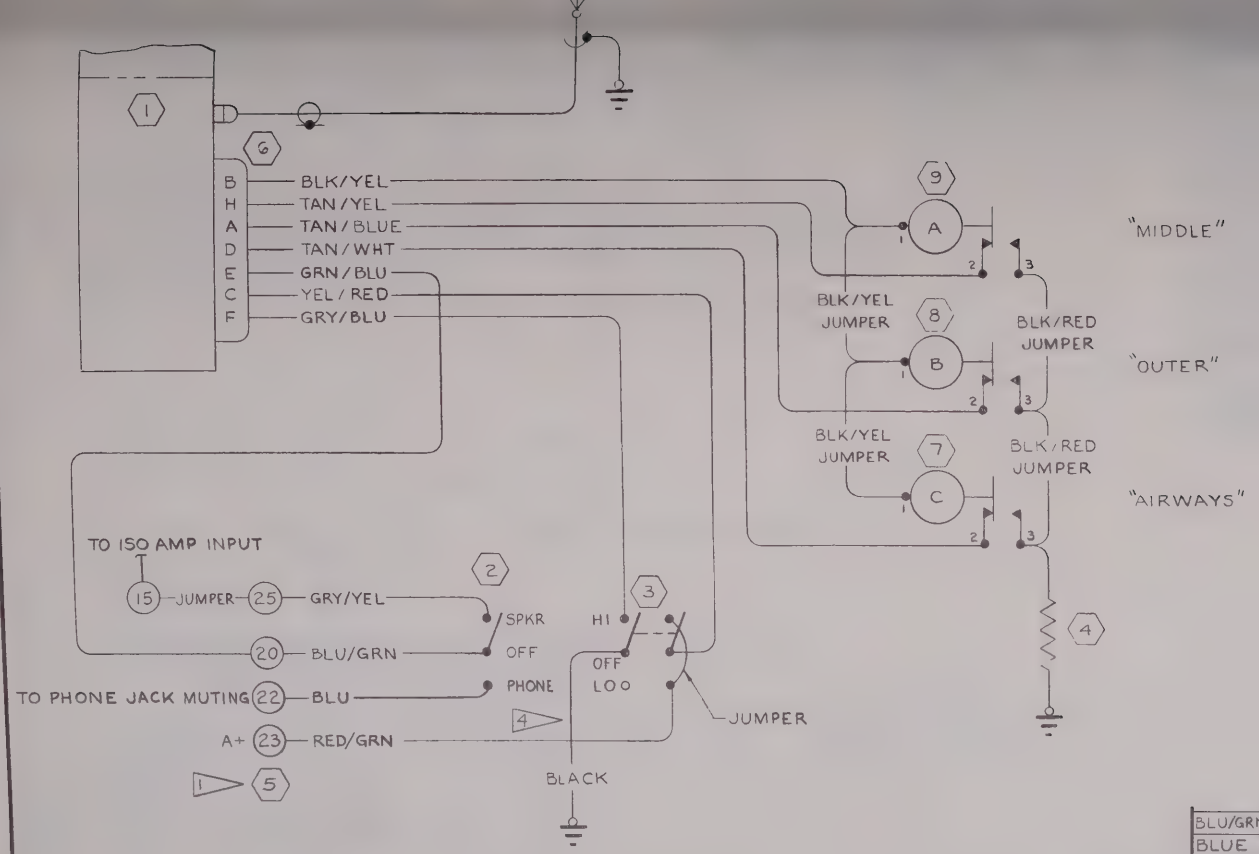


NOTES:

1. NUMBERS IN CIRCLES ARE NUMBERS ON 0770714-1 TERMINAL BLOCK ASSY.
2. WIRE MATERIAL PER S-1460.
3. TERMINAL BLOCK NUMBERS TO BE STAMPED ON WIRE PER CES-1015.
4. "PHONE" & "LO" FUNCTION TO BE ON KEYWAY SIDE OF SWITCH.

| ITEM NO. | PART NO. | DESCRIPTION | INSTALLED ON |
|---|---|---|---|
| 9 | MS25041-4-328 | LIGHT ASSY | |
| 8 | MS25041-10-328 | LIGHT ASSY | |
| 7 | MS25041- -328 | LIGHT ASSY | |
| 6 | 28371-0007 | PLUG (ARC) | |
| 5 | 0770714-1 | TERM. BLOCK ASSY | |
| 4 | 40Ω, 3 WATT | RESISTOR (OM) | |
| 3 | MST-205P | SWITCH (AELM) | |
| 2 | MST-105E | SWITCH (AELM) | |
| 1 | 32980-0014 | ACCESSORY UNIT | (ARC RA-525M) |

EQUIPMENT TABLE

| WIRE CODE NO. | GA | MATERIAL | LG | TERMINALS | | SERIALS |
|---|---|---|---|---|---|---|
| BLU/GRN | 22 | -22-6-5 | | SOLDER | S-1367-1-8 | |
| BLUE | 22 | -22-6 | | SOLDER | S-1367-1-8 | |
| BLACK | 22 | -22-0 | | SOLDER | S-1367-1-8 | |
| RED/GRN | 20 | -20-2-5 | | | S-1367-1-8 | |
| GRY/YEL | 22 | -22-8-4 | | | S-1367-1-8 | |
| GRY/BLU | 22 | -22-8-6 | | | SOLDER | |
| YEL/RED | 20 | -20-4-2 | | | SOLDER | |
| GRN/BLU | 20 | -20-5-6 | | | S-1367-1-8 | |
| TAN/WHT | 22 | -22-10-9 | | | SOLDER | |
| TAN/BLU | 22 | -22-10-6 | | | SOLDER | |
| TAN/YEL | 22 | -22-10-4 | | | SOLDER | |
| BLK/YEL | 22 | -22-0-4 | | SOLDER | SOLDER | |

2 WIRE TABLE

CESSNA AIRCRAFT CO., COMMERCIAL AIRCRAFT DIVISION, WICHITA, KANSAS

| | NAME | DATE |
|---|---|---|
| DRAWN | G WOOD | 5-18-65 |
| GROUP | H Wise | 5-19-65 |
| CHECK | | |
| PROJ | | 5-24-65 |

TITLE: WIRING DIAGRAM— MARKER BEACON CESSNA NAV/OMNI 300 (ARC TYPE 525A)

Cessna

DWG NO: 0770750

SUPERSEDED BY: | SUPERSEDES: | MODEL: 182 | REV: | PAGE: 2.30.1

FORM NO 80-161A

(SR4642)

| CHG LET | REVISION | BY / DATE | CHK / APPD |
|---|---|---|---|
| | | | |

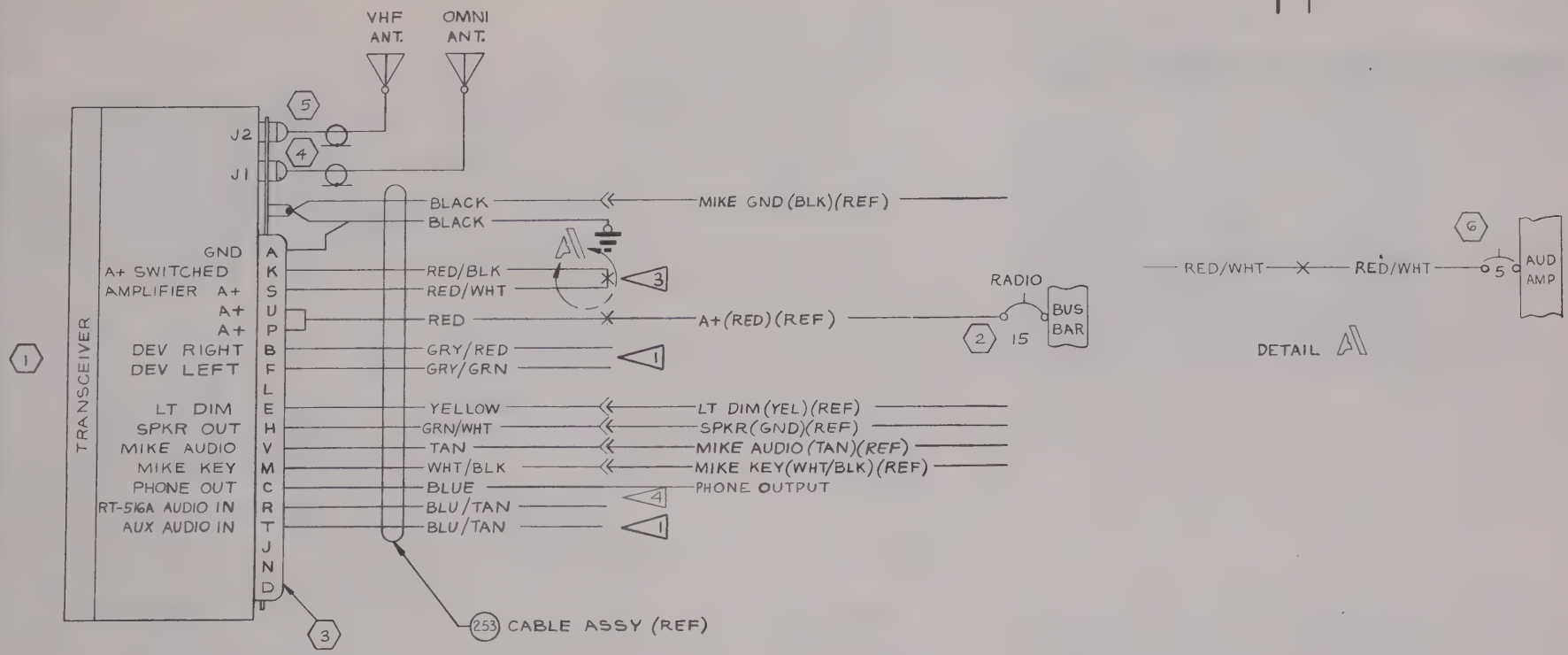


NOTES:

1. WIRES NOT USED SHALL BE CAPPED AND TIED INTO A BUNDLE
2. WIRE MATERIAL PER S-1460
3. WHEN THIS SET IS INSTALLED AS A SINGLE RADIO, CONNECT PINS "S" & "K" TOGETHER AS SHOWN. WHEN INSTALLED IN CONJUNCTION WITH ANOTHER RADIO SET SUCH AS AN ADF OR A NAV-OMNI, CONNECT PIN "S" AS SHOWN IN DETAIL "A"
4. WHEN THE NAV/COM IS INSTALLED WITH OTHER RADIO UNITS, THE BLUE WIRE CONNECTS TO THE WIPER OF A SPKR-PHONE SWITCH & BLU/TAN WIRE (PIN R) CONNECTS TO THE SPKR TERMINAL OF SPKR-PHONE SWITCH. ON SINGLE INSTALLATIONS, THE BLU/TAN WIRE (PIN R) CONNECTS TO BLUE WIRE

(SEE PAGE 2.31.1.1 FOR CONTINUATION OF NOTES)

| WIRE CODE NO. | GA | MATERIAL | LG | TERMINALS | | | SERIALS |
|---|---|---|---|---|---|---|---|
| RED/WHT | 18 | -18-2-9 | | S-1367-1-6 | S-1370-1 | | |
| BLU/TAN | 22 | -22-6-10 | | SOLDER | S-1557-1 | | |
| BLU/TAN | 22 | -22-6-10 | | | | | |
| BLUE | 22 | -22-6 | | | | | |
| WHT/BLK | 22 | -22-9-0 | | | S-341-2 | | |
| TAN | 22 | -22-10 | | | | | |
| GRN/WHT | 20 | -20-5-9 | | | | | |
| YELLOW | 18 | -18-4 | | | S-341-2 | | |
| GRY/GRN | 22 | -22-8-5 | | | S-1557-1 | | |
| GRY/RED | 22 | -22-8-2 | | | S-1557-1 | | |
| RED | 16 | -16-2 | | | S-1370-2 | | |
| RED/BLK | 18 | -18-2-0 | | | S-1370-1 | | |
| RED/WHT | 18 | -18-2-9 | | | | | |
| BLACK | 16 | -16-0 | | | S-1367-1-10 | | |
| BLACK | 22 | -22-0 | | SOLDER | S-341-2 | | |

2 WIRE TABLE

| | | | |
|---|---|---|---|
| 6 | S-1360-5 | CKT BKR | |
| 5 | 29753 | CONNECTOR (ARC) | |
| 4 | 29752 | CONNECTOR (ARC) | |

CESSNA AIRCRAFT CO., COMMERCIAL AIRCRAFT DIVISION, WICHITA, KANSAS

| DRAWN | NAME | DATE | TITLE |
|---|---|---|---|
| | [illegible] | [illegible] | WIRING DIAGRAM— |

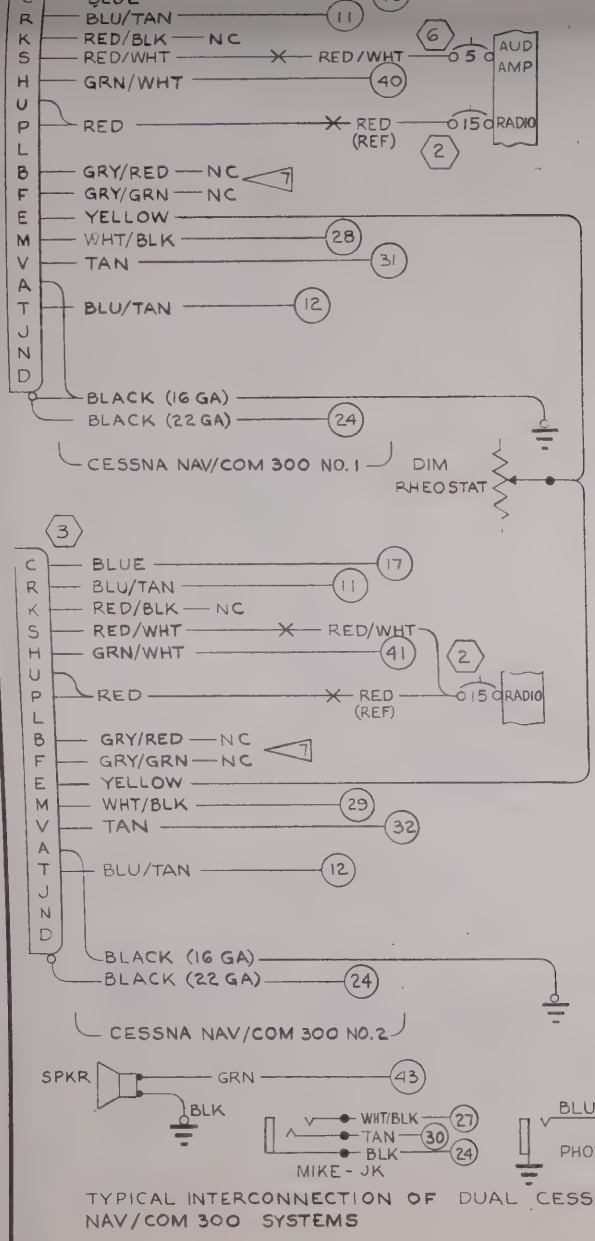


TYPICAL INTERCONNECTION OF DUAL CESSNA NAV/COM 300 SYSTEMS

6. ALWAYS HOT. SPEAKER OUTPUT FROM EACH SYSTEM CONNECTS EITHER TO A 5 OHM 10 WATT DUMMY LOAD OR THE SHIPS SPEAKER AS DETERMINED BY THE TRANSMITTER SELECTOR SWITCH.

7. WHEN AN OPTIONAL NAV-O-MATIC AUTOPILOT WITH OMNI COUPLER IS COMBINED WITH A CESSNA NAV/COM 300, THE GRY/RED WIRE CONNECTS TO DEV + CIRCUIT & THE GRY/GRN WIRE CONNECTS TO DEV- CIRCUIT.

| ITEM NO. | PART NO. | DESCRIPTION | INSTALLED ON |
|---|---|---|---|

EQUIPMENT TABLE

| WIRE CODE NO. | GA | MATERIAL | LG | TERMINALS | | SERIALS |
|---|---|---|---|---|---|---|
| | | | | | | |

WIRE TABLE

CESSNA AIRCRAFT CO., COMMERCIAL AIRCRAFT DIVISION, WICHITA, KANSAS

| | NAME | DATE |
|---|---|---|
| DRAWN | G WOOD | 6-6-65 |
| GROUP | H. Wise | 6-7-65 |
| CHECK | R Stucke | 6-9-65 |
| PROJ | Whe | 6-15-65 |

TITLE: WIRING DIAGRAM— CESSNA NAV/COM 300 (ARC TYPE 51GA)

Cessna

DWG NO: 0770750

| SUPERSEDED BY: | SUPERSEDES: 0770750 PAGE 2.7.1.1 | MODEL: 182 | REV: | PAGE: 2.31.1.1 |
|---|---|---|---|---|

FORM NO 80-161A

(SR 4642)

| CHG LET | REVISION | BY DATE | CHK APPD |
|---|---|---|---|
| | | | |

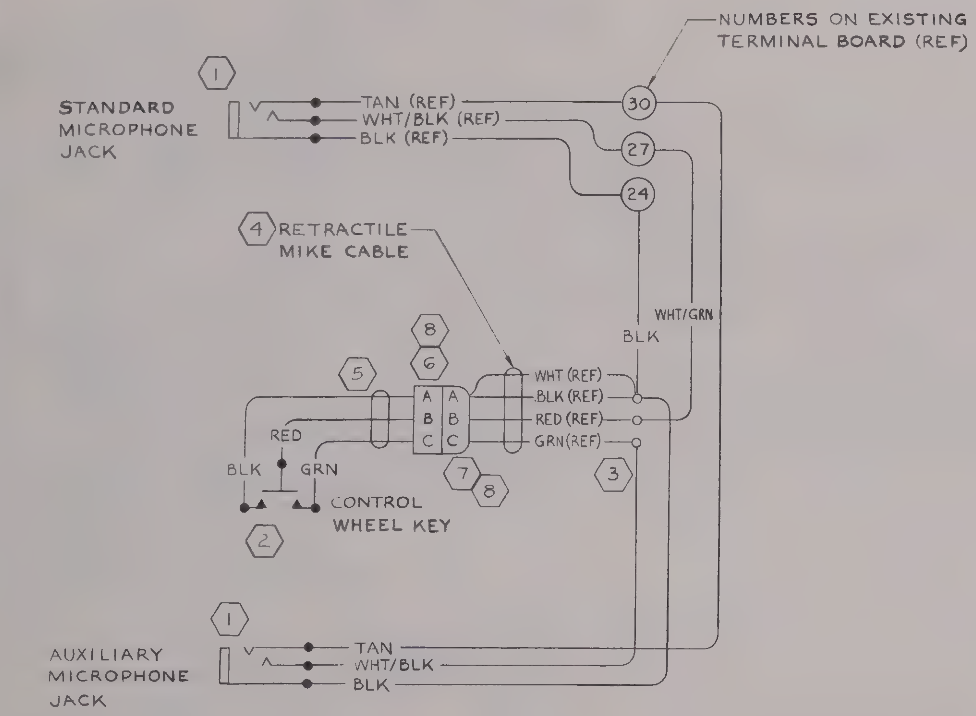


NOTES:

1. WIRE MATERIAL PER S-1460 EXCEPT AS NOTED.

| | | | |
|---|---|---|---|
| 8 | SM2H | HOOD (WIQ) | |
| 7 | SM3S | RECEPTACLE (WIQ) | |
| 6 | SM3P | PLUG (WIQ) | |
| 5 | 8443 | CABLE (BDN) | |
| 4 | 8409 | RETRACT. CABLE (BDN) | |

| WIRE CODE NO. | GA | MATERIAL | LG | TERMINALS | | | SERIALS |
|---|---|---|---|---|---|---|---|
| WHT/BLK | 22 | -22-9-0 | | SOLDER | S-1367-1-6 | | |
| TAN | 22 | -22-10 | | SOLDER | S-1367-1-8 | | |
| WHT/GRN | 22 | -22-9-5 | | S-1367-1-6 | S-1367-1-8 | | |
| BLACK | 22 | -22-0 | | S-1367-1-8 | S-1367-1-6 | | |
| BLACK | 22 | -22-0 | | SOLDER | S-1367-1-6 | | |

1 WIRE TABLE

CESSNA AIRCRAFT CO., COMMERCIAL AIRCRAFT DIVISION, WICHITA, KANSAS

DRAWN G. WOOD 6-30-65 TITLE WIRING DIAGRAM—

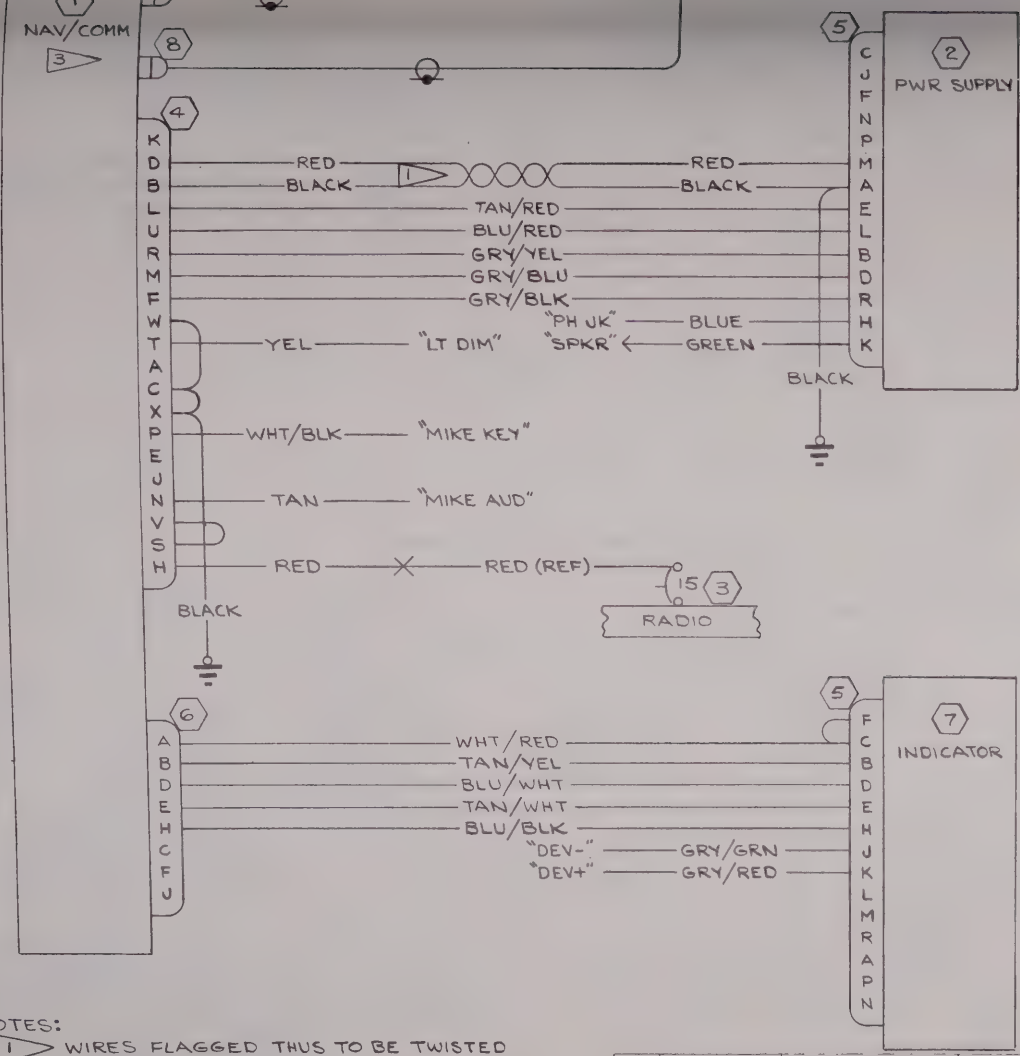


NOTES:

1. WIRES FLAGGED THUS TO BE TWISTED TOGETHER TO FORM A TWISTED PAIR.
2. WIRE MATERIAL PER S-1460.
3. THE KX-160E PANEL UNIT INCLUDES A 14 PIN CONNECTOR FOR DME CHANNELING THAT IS NOT SHOWN ON THIS DIAGRAM.

| ITEM NO | PART NO. | DESCRIPTION | INSTALLED ON |
|---|---|---|---|
| 9 | 030-0005-00 | CONNECTOR (KG) | |
| 8 | 030-0028-00 | CONNECTOR (KG) | |
| 7 | KI-201 | INDICATOR (KG) | |
| 6 | 030-2044-00 | CONNECTOR (KG) | |
| 5 | 030-2000-00 | CONNECTOR (KG) | |
| 4 | 030-2002-00 | CONNECTOR (KG) | |
| 3 | S-1360-15 | CIRCUIT BREAKER | |
| 2 | KS-505 | POWER SUPPLY | (KG) |
| 1 | KX-160E | NAV/COMM UNIT | (KG) |

EQUIPMENT TABLE

| WIRE CODE NO. | GA | MATERIAL | LG | TERMINALS | | | SERIALS |
|---|---|---|---|---|---|---|---|
| GRY/RED | 22 | -22-8-2 | | SOLDER | S-1557-1 | | |
| GRY/GRN | 22 | -22-8-5 | | | S-1557-1 | | |
| BLU/BLK | 22 | -22-6-0 | | | SOLDER | | |
| TAN/WHT | 22 | -22-10-9 | | | | | |
| BLU/WHT | 22 | -22-6-9 | | | | | |
| TAN/YEL | 22 | -22-10-4 | | | | | |
| WHT/RED | 22 | -22-9-2 | | | SOLDER | | |
| BLACK | 22 | -22-0 | | | S-1367-1-8 | | |
| RED | 16 | -16-2 | | | S-1370-2 | | |
| TAN | 22 | -22-10 | | | | | |
| WHT/BLK | 22 | -22-9-0 | | | | | |
| YELLOW | 18 | -18-4 | | | | | |
| BLACK | 22 | -22-0 | | | S-1367-1-8 | | |
| GREEN | 20 | -20-5 | | | S-341-2 | | |
| BLUE | 22 | -22-6 | | | | | |
| GRY/BLK | 22 | -22-8-0 | | | SOLDER | | |
| GRY/BLU | 22 | -22-8-6 | | | | | |
| GRY/YEL | 22 | -22-8-4 | | | | | |
| BLU/RED | 22 | -22-6-2 | | | | | |
| TAN/RED | 22 | -22-10-2 | | | | | |
| BLACK | 16 | -16-0 | | | | | |
| RED | 16 | -16-2 | | SOLDER | SOLDER | | |

2 WIRE TABLE

CESSNA AIRCRAFT CO., COMMERCIAL AIRCRAFT DIVISION, WICHITA, KANSAS

| | NAME | DATE |
|---|---|---|
| DRAWN | RIDDER | 6-21-65 |
| GROUP | H Wise | 7-16-65 |
| CHECK | [illegible] | 7-16-65 |
| PROJ | N.M.E. | 7-19-65 |

TITLE: WIRING DIAGRAM— KING KX-160E NAV/COM

Cessna.

DWG NO: 0770750

SUPERSEDED BY: | SUPERSEDES: | MODEL: 182 | REV: | PAGE: 2.34.1

FORM NO 80-161A

(SR4642)

| CHG LET | REVISION | BY / DATE | CHK / APPD |
|---|---|---|---|
| | | | |

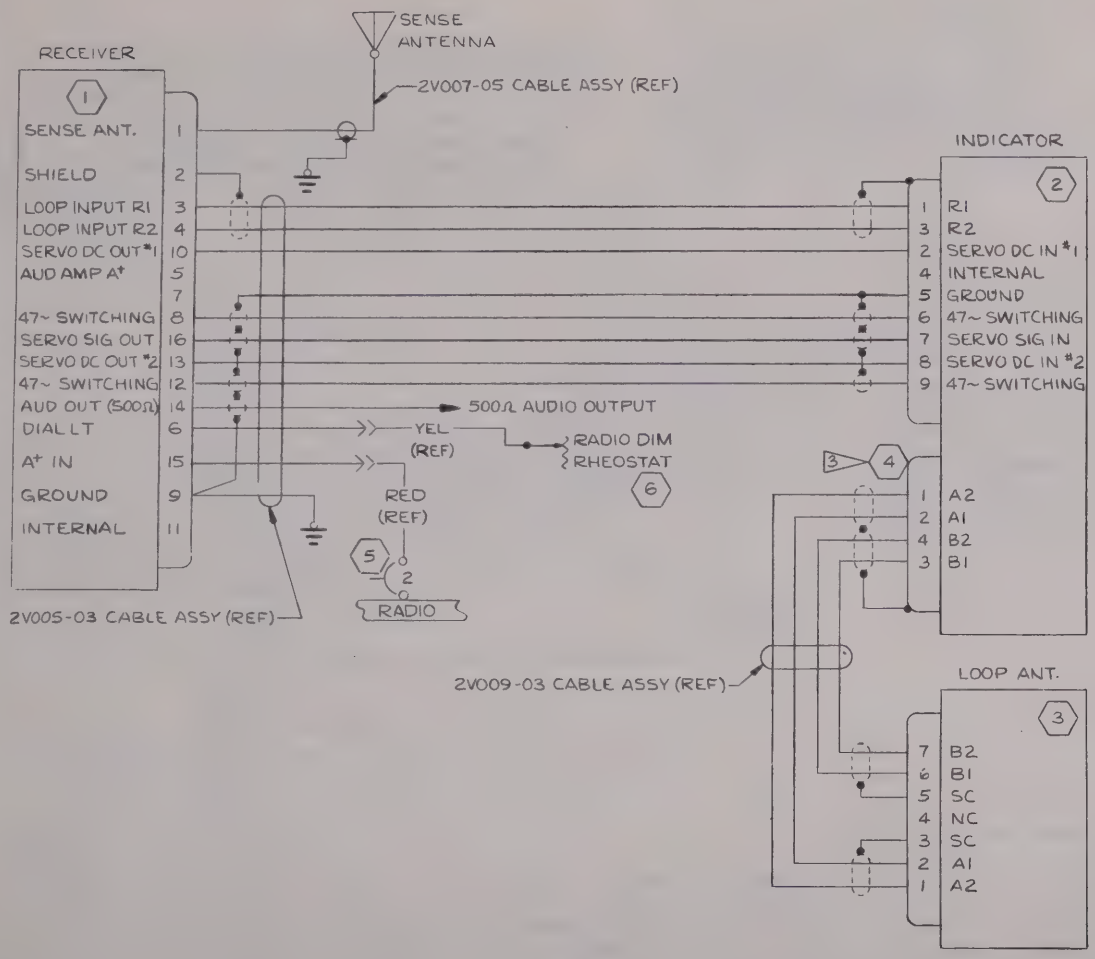


NOTES:

1. CONNECTIONS SHOWN ARE FOR TOP MOUNTED SENSE & BOTTOM MOUNTED LOOP ANTENNA.
2. ALL WIRES ARE VENDOR FURNISHED WITH INSTL KIT

3. (4) IS SUPPLIED LOOSE BY VENDOR & IS TO BE ATTACHED TO LOOP ANT. CABLE AS SHOWN. FLAGS ON WIRES INDICATE PIN NOS. ON LOOP ANT. END OF CABLE.

| | | | |
|---|---|---|---|
| 6 | R-12½-75-RS34 | RHEOSTAT (TRTA) | |
| 5 | S-1360-2 | CIRCUIT BREAKER | |
| 3 4 | WK-4-21C-5/16 | PLUG (CED) | |

| WIRE CODE NO. | GA | MATERIAL | LG | TERMINALS | | SERIALS |
|---|---|---|---|---|---|---|
| | | | | | | |

WIRE TABLE

CESSNA AIRCRAFT CO., COMMERCIAL AIRCRAFT DIVISION, WICHITA, KANSAS

| | NAME | DATE |
|---|---|---|
| DRAWN | HOLFORD | 7-20-65 |

TITLE: WIRING DIAGRAM—

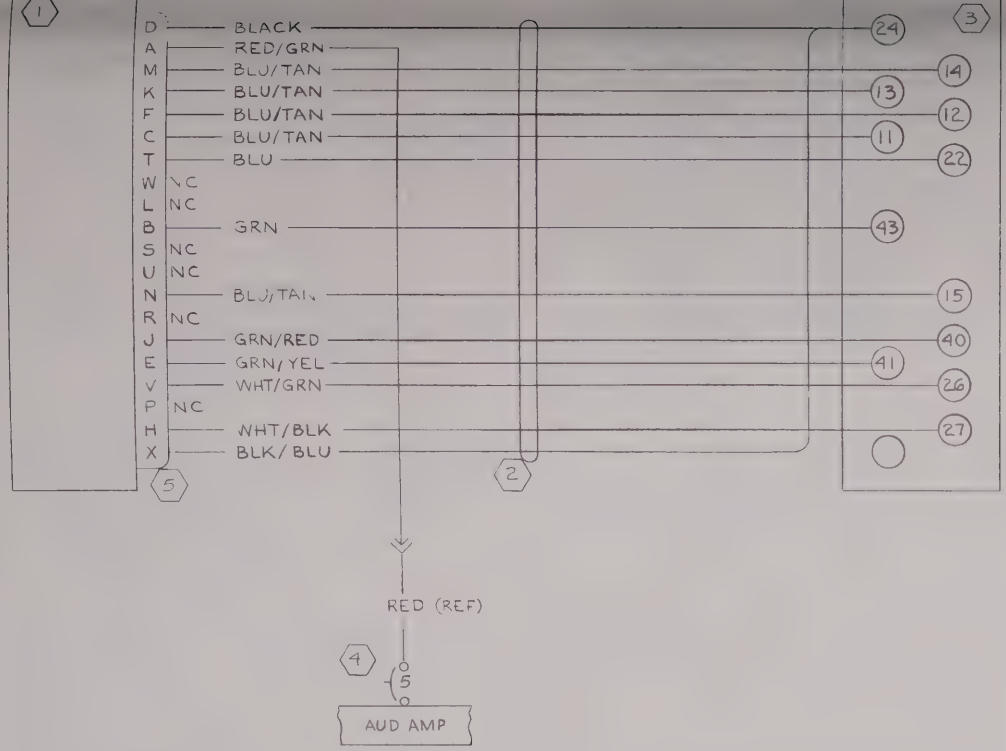


1. THESE CIRCUITS PROVIDE A 4 Ω, 5 WATT SPEAKER LOAD WHEN REQD BY THE RADIO INSTALLATION.
2. CONNECTOR IS FURNISHED WITH KA-25C.
3. TERMINAL BLOCK NUMBERS TO BE STAMPED ON WIRES PER CES 1015.

| WIRE CODE NO. | GA | MATERIAL | LG | TERMINALS | | SERIALS |
|---|---|---|---|---|---|---|
| BLU/TAN | 22 | S-1460-22-6-10 | | S-1367-1-8 | SOLDER | |
| WHT/GRN | 22 | S-1460-22-9-5 | | S-1367-1-8 | SOLDER | |
| BLACK | 8 | -18-0 | | S-367-1-8 | | |
| RED/GRN | 20 | -20-2-5 | | S-341-2 | | |
| BLU/TAN | 22 | -22-6-10 | | S-1367-1-8 | | |
| BLU/TAN | 22 | -22-6-10 | | | | |
| BLU/TAN | 22 | -22-6-10 | | | | |
| BLU/TAN | 22 | -22-6-10 | | | | |
| BLU | 22 | -22-6 | | | | |
| GRN | 20 | -20-5 | | | | |
| GRN/RED | 20 | -20-5-2 | | | | |
| GRN/YEL | 20 | -20-5-4 | | | | |
| WHT/BLK | 22 | -22-9-0 | | | | |
| BLK/BLU | 22 | S-1460-22-0-6 | | S-1367-1-8 | SOLDER | |

WIRE TABLE

| ITEM NO | PART NO. | DESCRIPTION | INSTALLED ON |
|---|---|---|---|
| 5 | 030-2002-00 | PLUG (KG) | |
| 4 | S-1360-5 | CIRCUIT BREAKER | |
| 3 | 0770714-2 | TERMINAL BOARD | |
| 2 | 0770750-257 | CABLE ASSY | |
| 1 | KA-25C | AUDIO AMP (KG) | |

EQUIPMENT TABLE

CESSNA AIRCRAFT CO., COMMERCIAL AIRCRAFT DIVISION, WICHITA, KANSAS

| | NAME | DATE |
|---|---|---|
| DRAWN | G WOOD | 11-22-65 |
| GROUP | H Wine | 11-29-65 |
| CHECK | R. Stuart | 11-30-65 |
| PROJ | H. Wine | 12-6-65 |

TITLE: WIRING DIAGRAM— KING KA-25C AUDIO AMPLIFIER

Cessna

DWG NO: 0770750

SUPERSEDED BY:

SUPERSEDES: 0770750 PAGE 2.19

MODEL: 182

REV:

PAGE: 2.36.1

FORM NO 80-161A

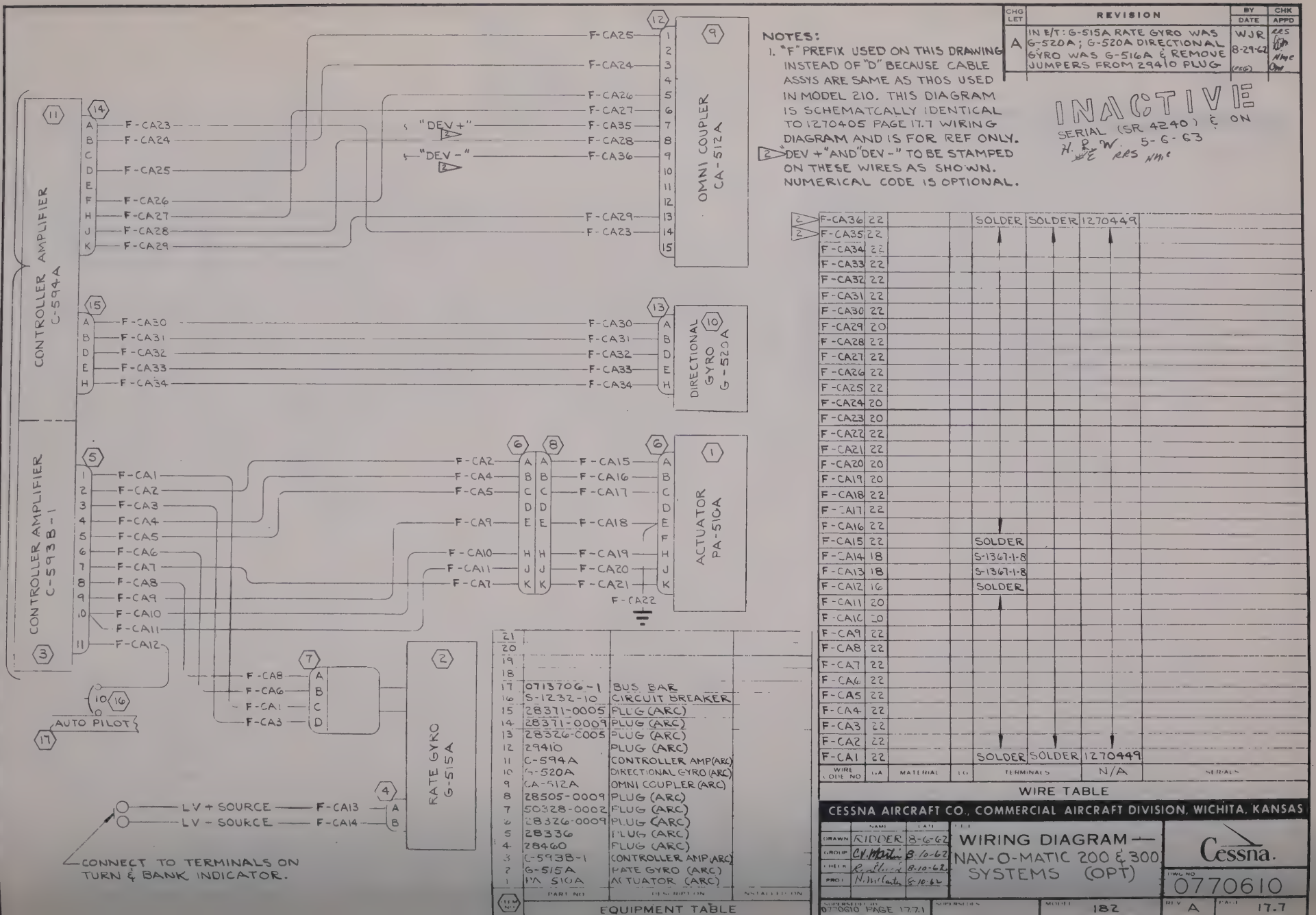


NOTES:

1. "F" PREFIX USED ON THIS DRAWING INSTEAD OF "D" BECAUSE CABLE ASSYS ARE SAME AS THOS USED IN MODEL 210. THIS DIAGRAM IS SCHEMATCALLY IDENTICAL TO 1270405 PAGE 17.7 WIRING DIAGRAM AND IS FOR REF ONLY.
2. "DEV+" AND "DEV-" TO BE STAMPED ON THESE WIRES AS SHOWN. NUMERICAL CODE IS OPTIONAL.

| CHG LET | REVISION | BY DATE | CHK APPD |
|---|---|---|---|
| A | IN E/T: G-515A RATE GYRO WAS G-520A; G-520A DIRECTIONAL GYRO WAS G-516A & REMOVE JUMPERS FROM 29410 PLUG | WJR 8-29-62 (REG) | RRS NMC |

INACTIVE: SERIAL (SR 4240) & ON
H.B.W. 5-6-63
RRS NMC

| WIRE CODE NO | GA | MATERIAL | LG | TERMINALS | | N/A | SERIALS |
|---|---|---|---|---|---|---|---|
| C F-CA36 | 22 | | | SOLDER | SOLDER | 1270449 | |
| 2 F-CA35 | 22 | | | | | | |
| F-CA34 | 22 | | | | | | |
| F-CA33 | 22 | | | | | | |
| F-CA32 | 22 | | | | | | |
| F-CA31 | 22 | | | | | | |
| F-CA30 | 22 | | | | | | |
| F-CA29 | 20 | | | | | | |
| F-CA28 | 22 | | | | | | |
| F-CA27 | 22 | | | | | | |
| F-CA26 | 22 | | | | | | |
| F-CA25 | 22 | | | | | | |
| F-CA24 | 20 | | | | | | |
| F-CA23 | 20 | | | | | | |
| F-CA22 | 22 | | | | | | |
| F-CA21 | 22 | | | | | | |
| F-CA20 | 20 | | | | | | |
| F-CA19 | 20 | | | | | | |
| F-CA18 | 22 | | | | | | |
| F-CA17 | 22 | | | | | | |
| F-CA16 | 22 | | | | | | |
| F-CA15 | 22 | | | SOLDER | | | |
| F-CA14 | 18 | | | S-1367-1-8 | | | |
| F-CA13 | 18 | | | S-1367-1-8 | | | |
| F-CA12 | 16 | | | SOLDER | | | |
| F-CA11 | 20 | | | | | | |
| F-CA10 | 20 | | | | | | |
| F-CA9 | 22 | | | | | | |
| F-CA8 | 22 | | | | | | |
| F-CA7 | 22 | | | | | | |
| F-CA6 | 22 | | | | | | |
| F-CA5 | 22 | | | | | | |
| F-CA4 | 22 | | | | | | |
| F-CA3 | 22 | | | | | | |
| F-CA2 | 22 | | | | | | |
| F-CA1 | 22 | | | SOLDER | SOLDER | 1270449 | |

WIRE TABLE

| ITEM NO | PART NO | DESCRIPTION | INSTALLATION |
|---|---|---|---|
| 21 | | | |
| 20 | | | |
| 19 | | | |
| 18 | | | |
| 17 | 0713706-1 | BUS BAR | |
| 16 | S-1232-10 | CIRCUIT BREAKER | |
| 15 | 28371-0005 | PLUG (ARC) | |
| 14 | 28371-0009 | PLUG (ARC) | |
| 13 | 28326-C005 | PLUG (ARC) | |
| 12 | 29410 | PLUG (ARC) | |
| 11 | C-594A | CONTROLLER AMP (ARC) | |
| 10 | G-520A | DIRECTIONAL GYRO (ARC) | |
| 9 | CA-512A | OMNI COUPLER (ARC) | |
| 8 | 28505-0009 | PLUG (ARC) | |
| 7 | 50328-0002 | PLUG (ARC) | |
| 6 | 28326-0009 | PLUG (ARC) | |
| 5 | 28336 | PLUG (ARC) | |
| 4 | 28460 | PLUG (ARC) | |
| 3 | C-593B-1 | CONTROLLER AMP (ARC) | |
| 2 | G-515A | RATE GYRO (ARC) | |
| 1 | PA 510A | ACTUATOR (ARC) | |

EQUIPMENT TABLE

CESSNA AIRCRAFT CO., COMMERCIAL AIRCRAFT DIVISION, WICHITA, KANSAS

| | NAME | DATE |
|---|---|---|
| DRAWN | RIDDER | 8-6-62 |
| GROUP | C.V. Mott | 8-10-62 |
| CHECK | R. Pollock | 8-10-62 |
| PROJ | N. McCarter | 8-10-62 |

WIRING DIAGRAM — NAV-O-MATIC 200 & 300 SYSTEMS (OPT)

Cessna.

DWG NO 0770610

SUPERSEDES 0770610 PAGE 17.7.1 | SUPERSEDED BY | MODEL 182 | REV A | PAGE 17.7

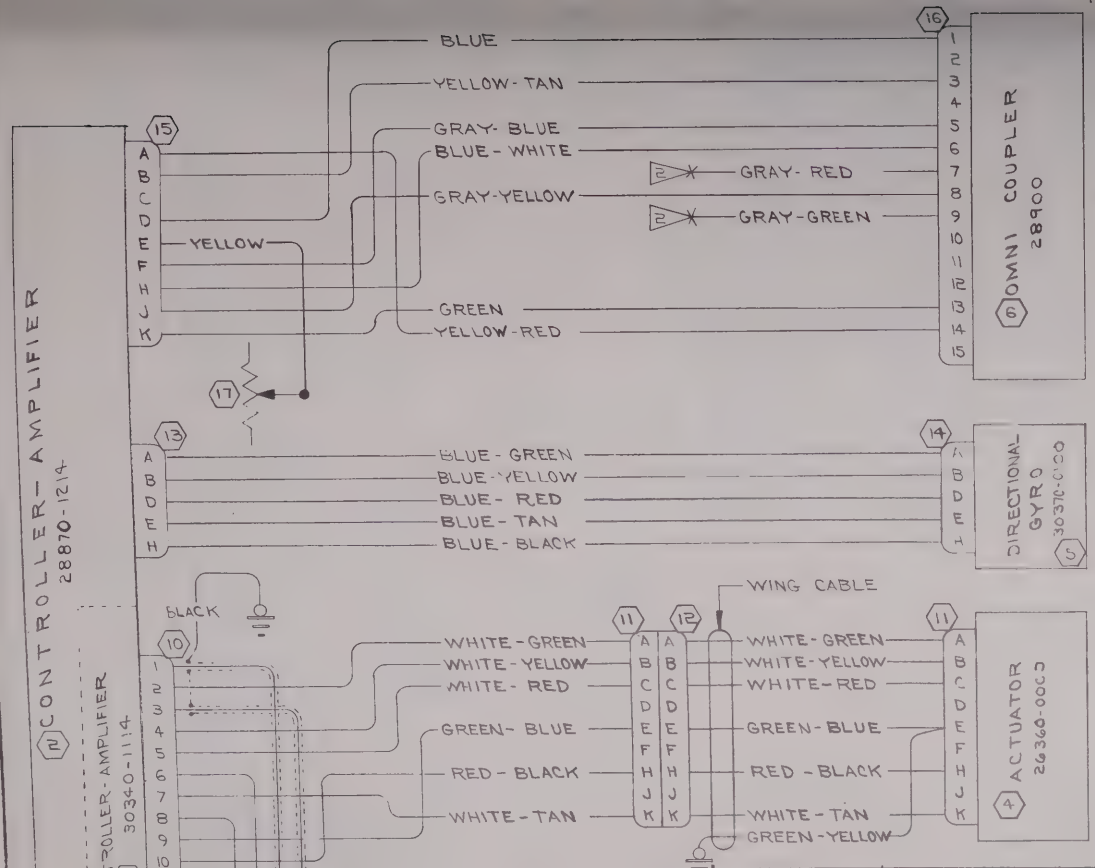


1. WHERE WIRE CODE LISTS 2 COLORS, 1ST COLOR IS BASE COLOR & 2ND COLOR IS THE STRIPE.
2. GRAY-RED WIRE IS "DEV+" CIRCUIT & GRAY-GREEN WIRE IS "DEV-" CIRCUIT FOR CONNECTION TO A VOR INDICATOR.
3. NAV-O-MATIC 300 SYSTEM INCLUDES ALL ITEMS EXCEPT (1), 200 SYSTEM INCLUDES (1) (3) (4) (7) & ASSOCIATED PLUGS & WIRES
4. THIS DRAWING IS SCHEMATICALLY IDENTICAL TO 1270405 PAGE 17.7.1 AND IS FOR (REF) ONLY. CABLE ASSYS TO BE FABRICATED PER 1270405, PAGE 17.7.1.

| LET | REVISION | DATE | APPD |
|---|---|---|---|
| A | ADDED YELLOW WIRE & R-12½-BR534-30340-1114 WAS C-5938-1; 28870-1214 WAS C-594A; 50320 WAS G-515A; 26360-0000 WAS PA-510A; 28900 WAS GA-512A; 30370-0100 WAS G-520A | WJR 10-30-69 | RES & AMS HW |

| ITEM NO | PART NO. | DESCRIPTION | INSTALLED ON |
|---|---|---|---|
| 17 | R-12½-8-RS34 | RHEOSTAT | |
| 16 | 29410 | PLUG (ARC) | |
| 15 | 28371-0009 | PLUG (ARC) | |
| 14 | 28326-0005 | PLUG (ARC) | |
| 13 | 28371-0005 | PLUG (ARC) | |
| 12 | 28505-0009 | PLUG (ARC) | |
| 11 | 28326-0009 | PLUG (ARC) | |
| 10 | 28336 | PLUG (ARC) | |
| 9 | 50328-0002 | PLUG (ARC) | |
| 8 | 28460 | PLUG (ARC) | |
| 7 | S-1360-10 | CIRCUIT BREAKER | |
| 6 | 28900 | OMNI COUPLER (ARC TYPE CA-512A) | |
| 5 | 30370-0100 | DIRECTION GYRO (ARC TYPE G-520A) | |
| 4 | 26360-0000 | ACTUATOR (ARC TYPE PA-510A) | |
| 3 | 50320 | RATE GYRO (ARC TYPE G-515A) | |
| 2 | 28870-1214 | CONTROLLER-AMP (ARC TYPE C-594A-12) | |
| 1 | 30340-1114 | CONTROLLER-AMP (ARC TYPE C-5938-11) | |

EQUIPMENT TABLE

| WIRE CODE NO | GA | MATERIAL | LG | TERMINALS | | NEXT ASSEMBLY | SERIALS |
|---|---|---|---|---|---|---|---|
| YELLOW | 20 | S-1460-22-4 | | SOLDER | SOLDER | 1270449 | 18255900 & ON |
| BLACK | 16 | S-1460-16-0 | | SOLDER | S-1367-2-8 | 270449 | |
| YELLOW/RED | 20 | S-1460-20-4-2 | | | SOLDER | | |
| GREEN | 20 | S-1460-20-5 | | | SOLDER | | |
| GRAY/GREEN | 22 | S-1460-22-8-5 | | | S-1370-0 | | |
| GRAY/RED | 22 | S-1460-22-8-2 | | | S-1370-0 | | |
| GRAY/YELLOW | 22 | S-1460-22-8-4 | | | SOLDER | | |
| BLUE/WHITE | 22 | S-1460-22-6-9 | | | | | |
| GRAY/BLUE | 22 | S-1460-22-8-6 | | | | | |
| YELLOW/TAN | 20 | S-1460-20-4-10 | | | | | |
| BLUE | 22 | S-1460-22-6 | | | | | |
| BLUE/BLACK | 22 | S-1460-22-6-0 | | | | | |
| BLUE/TAN | 22 | S-1460-22-6-10 | | | | | |
| BLUE/RED | 22 | S-1460-22-6-2 | | | | | |
| BLUE/YELLOW | 22 | S-1460-22-6-4 | | | | | |
| BLUE/GREEN | 22 | S-1460-22-6-5 | | | | | |
| WHITE/GREEN | 22 | S-1460-22-9-5 | | | | | |
| WHITE/YELLOW | 22 | S-1460-22-9-4 | | | | | |
| WHITE/RED | 22 | S-1460-22-9-2 | | | | | |
| GREEN/BLUE | 20 | S-1460-20-5-6 | | | | | |
| RED/BLACK | 18 | S-1460-18-2-0 | | | | | |
| WHITE/TAN | 22 | S-1460-22-9-10 | | | SOLDER | | |
| GREEN/YELLOW | 20 | S-1460-20-5-4 | | | S-1367-1-8 | | |
| BLACK/WHITE | 18 | S-1460-18-0-9 | | | S-1367-1-8 | | |
| RED/WHITE | 18 | S-1460-18-2-9 | | | S-1367-1-8 | | |
| RED | 16 | S-1460-16-2 | | | S-1367-2-8 | | |
| RED/BLACK | 18 | S-1460-18-2-0 | | | SOLDER | | |
| GREEN/BLUE | 20 | S-1460-20-5-6 | | | | | |
| TAN/WHITE | 22 | S-1460-22-10-9 | | | | | |
| WHITE/TAN | 22 | S-1460-22-9-10 | | | | | |
| TAN/BLUE | 22 | S-1460-22-10-6 | | | | | |
| WHITE/RED | 22 | S-1460-22-9-2 | | | | | |
| WHITE/YELLOW | 22 | S-1460-22-9-4 | | | | | |
| BLUE/RED | 22 | S-1461-22-6-2 | | | | | |
| WHITE/GREEN | 22 | S-1460-22-9-5 | | | | | |
| BLUE/YELLOW | 22 | S-1461-22-6-4 | | SOLDER | SOLDER | 1270449 | |

WIRE TABLE

CESSNA AIRCRAFT CO., COMMERCIAL AIRCRAFT DIVISION, WICHITA, KANSAS

| | NAME | DATE |
|---|---|---|
| DRAWN | H. WISE | 5-3-63 |
| GROUP | | |
| CHECK | | 5-16-63 |
| PROJ | | 5-23-63 |

TITLE: WIRING DIAGRAM — NAV-O-MATIC 200 & 300 SYSTEMS (OPT)

Cessna.

DWG NO. 0770610

SUPERSEDED BY | SUPERSEDES 0770610, PAGE 17.7 | MODEL 182 | REV A | PAGE 17.7.1

FORM NO. 80-161

(SR4338)

| CHG LET | REVISION | BY DATE | CHK APPD |
|---|---|---|---|
| | | | |

NOTES:

1. GRY/RED WIRE IS "DEV+" CIRCUIT & GRY/GRN WIRE IS "DEV-" CIRCUIT FOR CONNECTION TO A VOR INDICATOR.
2. CONNECTORS REQUIRED FOR FABRICATING A COMPLETE SET OF INTERCONNECTING CABLES ARE INCLUDED IN ARC CONNECTOR KIT NO. 31682.
3. WING CABLE ASSY AND DIRECTIONAL GYRO CABLE ARE FOR REFERENCE ONLY THESE CABLES ARE IDENTICAL IN LENGTH AND COLOR CODING TO CABLES USED ON NAV-O-MATIC 300 INSTL.

| ITEM NO. | PART NO. | DESCRIPTION | INSTALLED ON |
|---|---|---|---|
| | | EQUIPMENT TABLE | |
| 21 | 1270449-4 | CABLE ASSY | |
| 20 | 1270449-2 | CABLE ASSY | |
| 19 | 0713743-1 | BUS BAR | |
| 18 | RED | WIRE | |
| 17 | S-1360-10 | CIRCUIT BREAKER | |
| 16 | R-1Z½-75-RS34 | RHEOSTAT (TRTA) | |
| 15 | YELLOW | WIRE | |
| 14 | 28371-0009 | CONNECTOR (ARC | <2 |
| 13 | 28505-0009 | CONNECTOR (ARC) | |
| 12 | 28326-0009 | CONNECTOR (ARC) | |
| 11 | 28326-0007 | CONNECTOR (ARC) | |
| 10 | 28326-0005 | CONNECTOR (ARC) | |
| 9 | 28371-0005 | CONNECTOR (ARC) | |
| 8 | 28371-0007 | CONNECTOR (ARC) | |
| 7 | 31683-0020 | CONNECTOR ASSY | (ARC) <2 |
| 6 | 30370-0100 | DIRECTIONAL GYRO | (ARC G-520A) |
| 5 | 26360-0000 | ROLL ACTUATOR | (ARC PA-510A) |
| 4 | 26360-0000 | PITCH ACTUATOR | (ARC PA-510A) |
| 3 | 30475-0000 | VERTICAL GYRO | (ARC G-519A) |
| 2 | 30520-0014 | COMPUTER (ARC) | (CA-520A) |
| 1 | 30510-1014 | CONTROL UNIT (ARC) | (C-520A) |

| WIRE CODE NO. | GA | MATERIAL | LG | TERMINALS | | N/A | SERIALS |
|---|---|---|---|---|---|---|---|
| GRN/YEL | 20 | S-1460-20-5-4 | | SOLDER | S-1367-1-8 | 0770704 | |
| WHT/BLK | 22 | S-1960-22-9-0 | | | SOLDER | | |
| RED/BLK | 18 | S-1460-18-2-0 | | | | | |
| WHT/RED | 22 | S-1960-229-2 | | | | | |
| BLK/BLU | 22 | S-1460-22-0-6 | | | | | |
| WHT/YEL | 22 | S-1460-22-9-4 | | | | | |
| WHT/GRN | 22 | S-1460-22-9-5 | | | | | |
| WHT/BLU | 22 | S-1460-22-9-6 | | | | | |
| WHT/TAN | 22 | S-1460-22-9-10 | | | | | |
| RED/BLK | 18 | S-1460-18-2-0 | | | | | |
| WHT/RED | 22 | S-1460-22-9-2 | | | | | |
| WHT/BLU | 22 | S-1460-22-9-6 | | | | | |
| WHT/TAN | 22 | S-1460-22-9-10 | | | | | |
| WHT/YEL | 22 | S-1460-22-9-4 | | | | | |
| WHT/GRN | 22 | S-1460-22-9-5 | | SOLDER | SOLDER | 0770704 | |
| TAN/WHT | 22 | S-1460-22-10-9 | | SOLDER | SOLDER | 0770704 | |
| TAN/BLU | 22 | S-1460-22-10-6 | | | | | |
| TAN/YEL | 22 | S-1460-22-10-4 | | | | | |
| TAN/RED | 22 | S-1460-22-10-2 | | | SOLDER | | |
| YELLOW | 18 | S-1960-18-4 | | | S-1370-1 | | |
| RED | 16 | S-1460-16-2 | | | S-1370-2 | | |
| WHT/RED | 22 | S-1460-22-9-2 | | | SOLDER | | |
| BLU/TAN | 22 | S-1460-22-6-10 | | | | | |
| RED/WHT | 18 | S-1460-18-2-9 | | | | | |
| WHT/BLK | 22 | S-1460-22-9-0 | | | SOLDER | | |
| GRY/GRN | 22 | S-1460-22-8-5 | | | S-1370-1 | | |
| GRY/RED | 22 | S-1460-22-8-2 | | | S-1370-1 | | |
| BLU/WHT | 22 | S-1460-22-6-9 | | | SOLDER | | |
| RED/BLK | 18 | S-1460-18-2-0 | | | | | |
| TAN/WHT | 22 | S-1460-22-10-9 | | | | | |
| BLU/GRN | 22 | S-1460-22-6-5 | | | | | |
| TAN/BLU | 22 | S-1460-22-10-6 | | | | | |
| TAN/RED | 22 | S-1460-22-10-2 | | | | | |
| BLU/YEL | 22 | S-1460-22-6-4 | | | | | |
| TAN/YEL | 22 | S-1460-22-10-4 | | | | | |
| BLU/RED | 22 | S-1460-22-6-2 | | | | | |
| BLU/BLK | 22 | S-1460-22-6-0 | | | | | |
| TAN | 22 | S-1460-22-10 | | SOLDER | SOLDER | 0770704 | |
| BLUE | 22 | S-1460-22-6 | | | | | |

WIRE TABLE

CESSNA AIRCRAFT CO. COMMERCIAL AIRCRAFT DIVISION, WICHITA, KANSAS

| | NAME | DATE |
|---|---|---|
| DRAWN | RIDDER | 9-5-63 |
| GROUP | | 9-10-63 |
| CHECK | R. Buck | 1-18-63 |
| PROJ | N. McCarter | 9-30-63 |

TITLE: WIRING DIAGRAM — NAV-O-MATIC 400 SYSTEM (OPT)

Cessna.

DWG NO 0770610

SUPERSEDED BY | SUPERSEDES | MODEL 182 | REV | PAGE 17-23

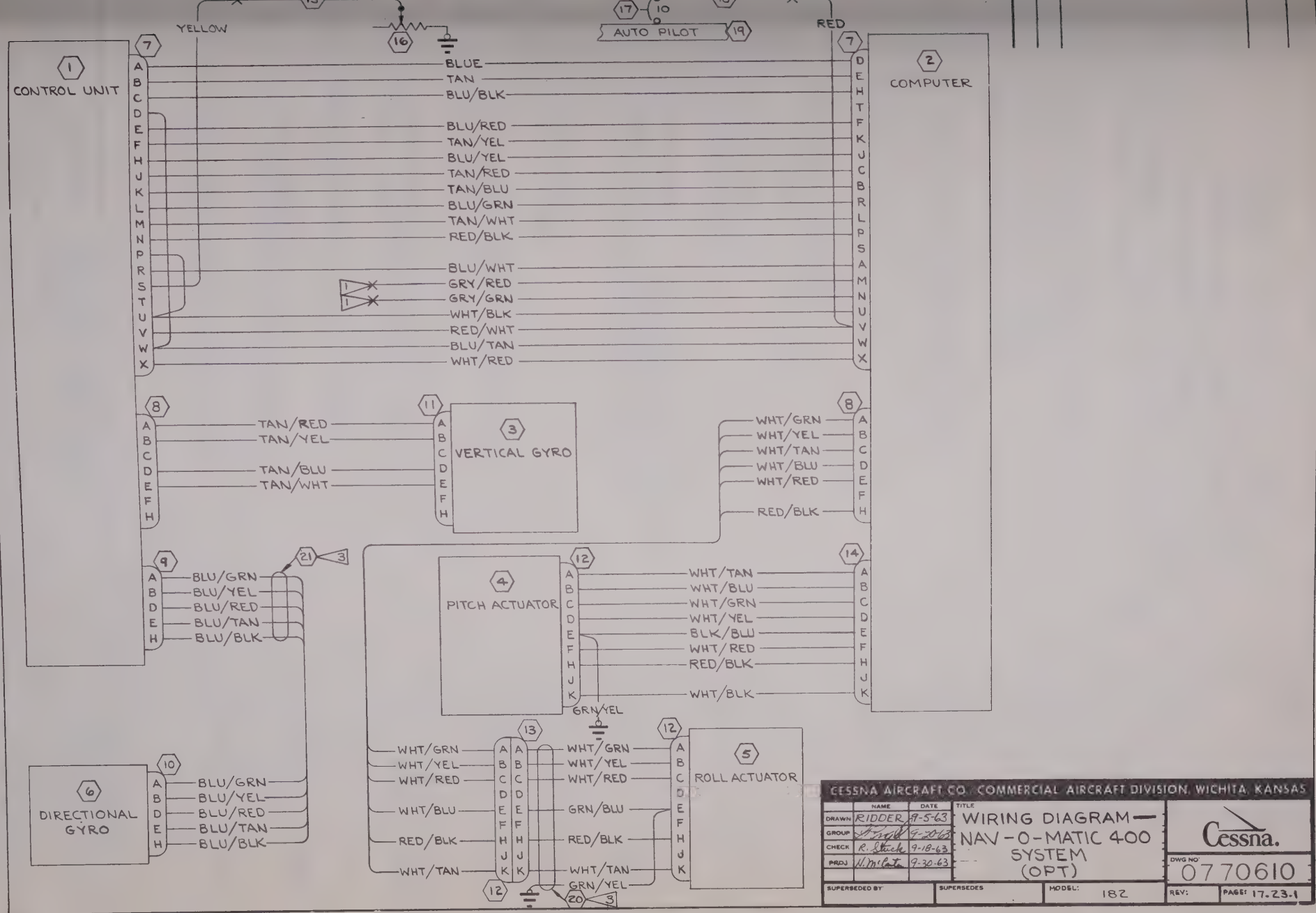


CESSNA AIRCRAFT CO. COMMERCIAL AIRCRAFT DIVISION, WICHITA, KANSAS

| | NAME | DATE |
|---|---|---|
| DRAWN | RIDDER | 9-5-63 |
| GROUP | | 9-20-63 |
| CHECK | R. Stuck | 9-18-63 |
| PROJ | H. McCarter | 9-30-63 |

TITLE: WIRING DIAGRAM — NAV-O-MATIC 400 SYSTEM (OPT)

Cessna.

DWG NO: 0770610

SUPERSEDED BY | SUPERSEDES | MODEL: 182 | REV: | PAGE: 17-23-1

# TABLE OF CONTENTS

| PAGE NO. | TITLE | DATE ISSUED | REV |
|---|---|---|---|
| | **1963 THRU 1964 SERIALS**<br>**205-0001 THRU 205-0577**<br>**206-0001 THRU 206-0275** | | |
| .1 | Radio Speaker, Phone Jack, Mike, Light Rheostat & Power Circuits | 7-15-63 | C |
| .2 | NARCO, MK V, VOA-3A, CS-3A & CS-5 | 3-4-63 | C-Inac. |
| .2.1 | Mark V, VOA-4 & VOA-5 | 3-4-63 | Inac. |
| .3 | NARCO Mark X & VOA-3A | 3-4-63 | C-Inac. |
| .3.1 | Mark X, VOA-4 & VOA-5 | 3-4-63 | Inac. |
| .4 | Cessna ADF 500 (ARC Type 318A) | 12-4-63 | B-Inac. |
| .4.1 | Cessna ADF 500 (ARC Type 318A) | 12-4-63 | A-Inac. |
| .5 | MKR BCN Audio Switch | 12-11-62 | A |
| .6 | ARC Type 501A ADF (Obsolete - Never Used) | | |
| .7 | Motorola M-135 | 5-9-63 | C-Inac. |
| .7.1 | Motorola M-135 | 5-9-63 | C-Inac. |
| .8 | Cessna Nav/Com 500 (ARC Tyle 317A) | 10-17-63 | A-Inac. |
| .8.1 | Cessna Nav/Com 500 (ARC Type 317A) | 9-8-64 | A-Inac. |
| .8.2 | Cessna Nav/Com 500 (ARC Type 317A) | 9-8-64 | Inac. |
| .9 | Sunair T-5-DA | 8-26-63 | B |
| .9.1 | Sunair T-T-DA | 8-26-63 | B |
| .10 | King KY-90, KY-95, KX-100 & KX-120 | 6-6-63 | A-Inac. |
| .10.1 | King KY-95 & KX-120 | 12-17-63 | A |
| .11 | Cessna Nav/Com 300 (ARC Type 513A) | 12-12-63 | B-Inac. |
| .11.1 | Cessna Nav/Com 300 (ARC Type 513A) | 12-12-63 | A-Inac. |
| .12 | XMTR & Audio Selector Switches | 3-4-63 | Inac. |
| .13 | Nav-O-Matic 200 & 300 | 5-27-63 | Inac. |
| .13.1 | Nav-O-Matic 200 & 300 Systems | 5-27-63 | |
| .14 | Cessna ADF 300 (ARC Type 521A) | 8-26-63 | A-Inac. |

# TABLE OF CONTENTS


| PAGE NO. | TITLE | DATE ISSUED | RE |
|---|---|---|---|
| 17.15 | King KX-150 | 8-26-63 | In |
| 17.15.1 | King KX-150 | 12-4-63 | In |
| 17.15.2 | King KX-150A | 12-4-63 | |
| 17.16 | NARCO UGR-IA Glide Slope with Narco Mark V or Mark X & VOA-5 | 7-10-63 | In |
| 17.16.1 | Mark UGR-IA Glide Slope with NARCO Mark V or Mark X & VOA-5 | 7-10-63 | In |
| 17.17 | Pantronics DXIO-D HF Transceiver Installation | 8-9-63 | In |
| 17.17.1 | Pantronics DXIO-D HF Transceiver Installation | 8-9-63 | In |
| 17.17.2 | Pantronics DXIO-D HF Transceiver Installation | 8-9-63 | In |
| 17.17.3 | Pantronics DXIO-D HF Transceiver Installation | 8-9-63 | |
| 17.17.4 | Pantronics DXIO-D HF Transceiver Installation | 8-9-63 | |
| 17.17.5 | Pantronics DXIO-D HF Transceiver Installation | 8-9-63 | |
| 17.18 | Cessna Nav/Omni 500 (ARC Type 319A) | 12-4-63 | A- |
| 17.18.1 | Cessna Nav/Omni 500 (ARC Type 319A) | 12-4-63 | A- |
| 17.18.2 | Cessna Nav/Omni 500 (ARC Type 319A) | 9-8-64 | In |
| 17.18.3 | Cessna Nav/Omni 500 (ARC Type 319A) | 9-8-64 | In |
| 17.19 | Cessna Transceiver 500 (ARC Type 302A) | 12-4-63 | A- |
| 17.19.1 | Cessna Transceiver 500 (ARC Type 302A) | 8-20-64 | A- |
| 17.20 | Transmitter & Audio Selector Switch With King KA-10 Amp | 8-26-63 | |
| 17.21 | Transmitter and Audio Selector Switches | 8-26-63 | |
| 17.21.1 | Transmitter and Audio Selector Switches (Floatplane) | 1-13-64 | |
| 17.22 | Cessna Marker Beacon 300 (ARC Type R-502R) | 3-17-64 | |
| 17.23 | Narco Mark 12 with VOA-4, VOA-5 or VOA-6 | 5-17-63 | |
| 17.24 | Narco UGR-1A Glideslope with Narco Mark 12 & VOA-5 | 7-15-63 | |
| 17.25 | Cessna Nav/Com 300 (ARC Type 514A) | 8-20-64 | A- |
| 17.25.1 | Cessna Nav/Com 300 (ARC Type 514A) | 8-20-64 | A- |
| 17.26 | Nav-O-Matic 400 System | 11-14-63 | |
| 17.26.1 | Nav-O-Matic 400 System | 11-14-63 | |
| 17.27 | Cessna Nav/Com 300R | 8-20-64 | In |

| LET | REVISION | DATE | APPD |
|---|---|---|---|
| A | REMOVE N/A FROM STD WIRES. ADD 'OPT' TO OPT WIRES. (SR3694-10) | 4-4-62 | |
| B | ADDED NOTE 4 & 0770640-2 & -3 ISOLATION AMPLIFIERS | 11-30-62 | |
| C | BY REV: ADDED COLOR CODED WIRES TO FIELD & B/M; H-LB2 18 GAGE WAS 20 GAGE; H-RP2, H-RP3, H-RP4 & H-RP5 22 GAGE WAS 20 GAGE; ADDED NOTE 5; OBSOLETED H-RD100 (SR4038) & (SR3983) | WJR 6-5-63 | |

NOTE:

1. WIRES TO BE OF SUFFICIENT LENGTH TO ALLOW CONNECTION TO ALL POSSIBLE RADIO COMBINATIONS. TERMINALS TO BE ATTACHED TO WIRES AS REQD BY THE VARIOUS RADIO INSTALLATIONS.
2. WIRES H-RP1, H-RP2, H-RP3, H-RP4, H-RP5 & H-LG2 TO BE CODED "SPKR", "PH-JK", "MIKE AUD", "MIKE-KEY", "MIKE-GND" & "LT-DIM" RESPECTIVELY. NUMERICAL CODING PER CES 1100 IS OPTIONAL ON THESE WIRES THRU (SR4038)
3. AS REQD ON VARIOUS RADIO INSTALLATIONS.
4. WIRES WITH "D" PREFIX SHOWN ON THIS PAGE ARE DERIVED FROM 0770610, PAGE 17.1. THESE WIRES ARE PART OF 0770631 SERIES OPTIONAL ISOLATION AMP INSTL.
5. COLOR CODED WIRES TO BE SUBSTITUTED FOR MACHINE STAMPED CODED WIRES (SR4038), (SR3983) & ON.

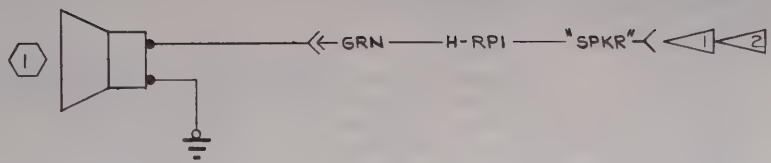


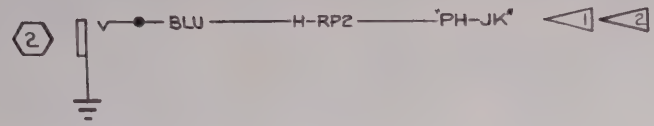


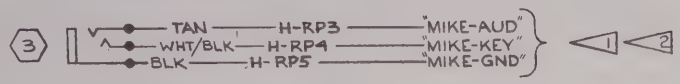


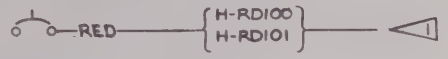


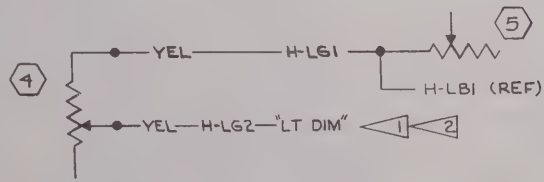


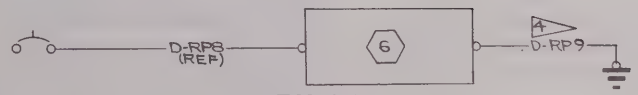


THRU SER 205-0053

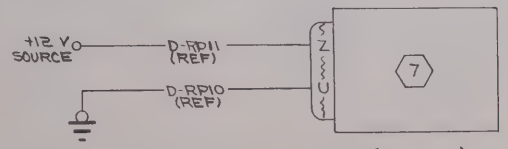


SER 205-0054 THRU (SR4099)

| WIRE CODE NO. | GA | MATERIAL | LG | TERMINALS | | N/A | SERIALS |
|---|---|---|---|---|---|---|---|
| RED | H-RD101 | 16 | S-1460-16-2 | 1 | S-1367-2-8 | 3 | (OPT) |
| 2 YELLOW | H-LG2 | 18 | S-1460-18-4 | 1 | SOLDER | 3 | (OPT) |
| YELLOW | H-LG1 | 18 | S-1460-18-4 | SOLDER | SOLDER | 3 | (OPT) |
| | H-RD100 | 18 | | 1 | S-1367-1-8 | 3 | (OPT) OBSOLETE |
| 2 BLACK | H-RP5 | 22 | S-1460-22-0 | 1 | SOLDER | 3 | (OPT) |
| WHT/BLK | H-RP4 | 22 | S-1460-22-9-0 | 1 | SOLDER | 3 | (OPT) |
| TAN | H-RP3 | 22 | S-1460-22-10 | 1 | SOLDER | 3 | (OPT) |
| BLUE | H-RP2 | 22 | S-1460-22-6 | 1 | SOLDER | 3 | (OPT) |
| 1 2 GREEN | H-RP1 | 20 | S-1460-20-5 | S-341-2 | S-341-2 | | |

WIRE TABLE

| ITEM NO. | PART NO. | DESCRIPTION | INSTALLED ON |
|---|---|---|---|
| 7 | 0770640-3 | ISOLATION AMP | |
| 6 | 0770640-2 | ISOLATION AMP | |
| 5 | R-12½-8-RS34 | RHEO, INST LT DIM | (TRTA) |
| 4 | R-12½-75-RS34 | RHEO, RADIO DIM | (TRTA) |
| 3 | S-1102 | MICROPHONE JACK | |
| 2 | S-1103 | HEADPHONE JACK | |
| 1 | 0411062 | SPEAKER | |

EQUIPMENT TABLE

CESSNA AIRCRAFT CO. COMMERCIAL AIRCRAFT DIVISION WICHITA KANSAS

| | NAME | DATE |
|---|---|---|
| DRAWN | G WOOD | 12-28-61 |
| GROUP | [illegible] | 1-24-62 |
| CHECK | R. Stuck | 2-5-62 |
| PROJ | H. McCarter | 2-7-62 |

TITLE: WIRING DIAGRAM — RADIO SPEAKER, PHONE JACK, MIKE, LIGHT RHEO, & POWER CIRCUITS

Cessna.

DWG NO: 1270625

SUPERSEDED BY | SUPERSEDES | MODEL: 205 & 206 | REV: C | PAGE: 17.1

FORM NO. 80-161

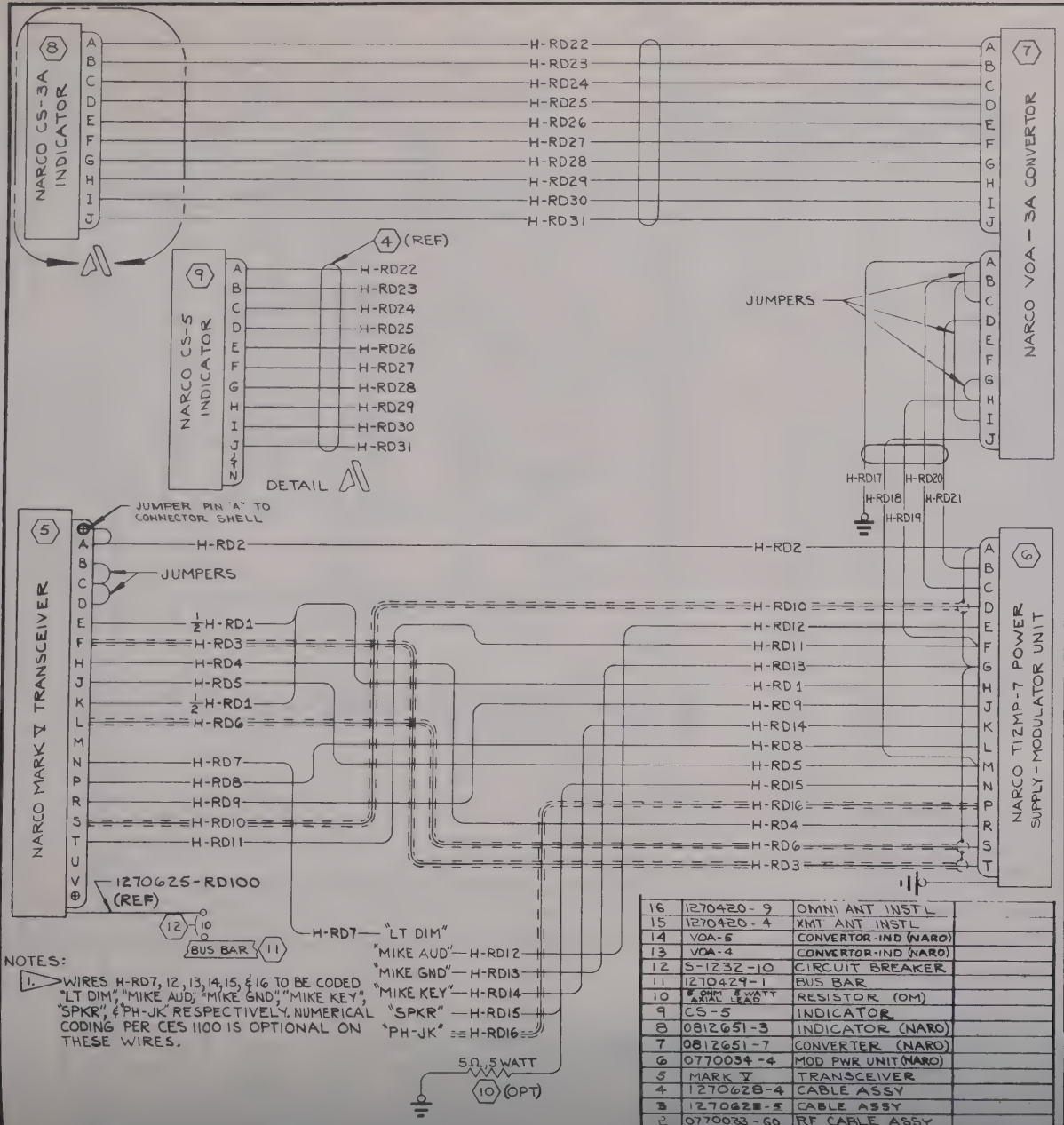


NOTES:

1. WIRES H-RD7, 12, 13, 14, 15, & 16 TO BE CODED "LT DIM", "MIKE AUD", "MIKE GND", "MIKE KEY", "SPKR", & "PH-JK" RESPECTIVELY. NUMERICAL CODING PER CES 1100 IS OPTIONAL ON THESE WIRES.

NARCO MARK V, VOA-3A, CS-3A & CS-5 INACTIVE SER 205-0002 & ON

| ITEM NO | PART NO. | DESCRIPTION | INSTALLED ON |
|---|---|---|---|
| 16 | 1270420-9 | OMNI ANT INSTL | |
| 15 | 1270420-4 | XMT ANT INSTL | |
| 14 | VOA-5 | CONVERTOR-IND (NARO) | |
| 13 | VOA-4 | CONVERTOR-IND (NARO) | |
| 12 | S-1232-10 | CIRCUIT BREAKER | |
| 11 | 1270429-1 | BUS BAR | |
| 10 | 5 OHM 5 WATT AXIAL LEAD | RESISTOR (OM) | |
| 9 | CS-5 | INDICATOR | |
| 8 | 0812651-3 | INDICATOR (NARO) | |
| 7 | 0812651-7 | CONVERTER (NARO) | |
| 6 | 0770034-4 | MOD PWR UNIT (NARO) | |
| 5 | MARK V | TRANSCEIVER | |
| 4 | 1270628-4 | CABLE ASSY | |
| 3 | 1270628-5 | CABLE ASSY | |
| 2 | 0770033-60 | RF CABLE ASSY | |
| 1 | 0770033-56 | RF CABLE ASSY | |

EQUIPMENT TABLE

(SR3694-10)

| CHG LET | REVISION | BY DATE | CHK APPD |
|---|---|---|---|
| A | REMOVED N/A FROM EQUIPMENT TABLE (SR3694-10) | GLW 5-2-62 | RRS |
| B | ADD PAGE 17.2.1 ADD BLK, WHT, GRN, BLUE WIRES. ADD VOA-4 & VOA-5 ADD 1270628-5 CABLE ASSY (SR 3923) | GLW 6-8-62 | RRS |
| C | ADDED H-RD32 & 33 WIRES & ASSOC. JUMPER FOR NAVO-MATIC. ADDED ITEMS 1, 2, 15, 16 INACTIVATED H-RDS. H-RD11, H-RD11 THRU H-RD31 INACTIVATED DWG (SR 4038) | GLW 11-2-63 | RRS |

INACTIVE SER 205-0481 & ON 11-2-63

| WIRE CODE NO. | GA | MATERIAL | LG | TERMINALS | | N/A | SERIALS |
|---|---|---|---|---|---|---|---|
| H-RD33 | 22 | | | SOLDER | S-1370-0 | 1270628 | |
| H-RD32 | 22 | | | SOLDER | S-1370-0 | 1270628 | |
| BLUE | 22 | BELDEN 8524 | | SOLDER | SOLDER | 1270628 | |
| GREEN | 22 | BELDEN 8524 | | SOLDER | SOLDER | | |
| WHITE | 22 | BELDEN 8524 | | SOLDER | SOLDER | | |
| BLACK | 22 | BELDEN 8524 | | SOLDER | SOLDER | | |
| H-RD31 | 22 | | | SOLDER | SOLDER | | INACTIVE SER 205-0002 & ON |
| H-RD30 | 22 | | | SOLDER | SOLDER | | |
| H-RD29 | 22 | | | SOLDER | SOLDER | | |
| H-RD28 | 22 | | | SOLDER | SOLDER | | |
| H-RD27 | 22 | | | SOLDER | SOLDER | | |
| H-RD26 | 22 | | | SOLDER | SOLDER | | |
| H-RD25 | 22 | | | SOLDER | SOLDER | | |
| H-RD24 | 22 | | | SOLDER | SOLDER | | |
| H-RD23 | 22 | | | SOLDER | SOLDER | | |
| H-RD22 | 22 | | | SOLDER | SOLDER | | |
| H-RD21 | 22 | | | SOLDER | SOLDER | | |
| H-RD20 | 18 | | | SOLDER | SOLDER | | |
| H-RD19 | 22 | | | SOLDER | SOLDER | | |
| H-RD18 | 22 | | | SOLDER | SOLDER | | |
| H-RD17 | 18 | | | S-1367-1-8 | SOLDER | | INACTIVE SER 205-0002 & ON |
| H-RD16 | 22S | | | SOLDER | | | |
| H-RD15 | 20 | | | SOLDER | | | |
| H-RD14 | 22 | | | SOLDER | | | |
| H-RD13 | 22 | | | SOLDER | | | |
| H-RD12 | 22 | | | SOLDER | | | |
| H-RD11 | 22 | | | SOLDER | SOLDER | | INACTIVE SER 205-0002 & ON |
| H-RD10 | 22S | | | SOLDER | SOLDER | | |
| H-RD9 | 22 | | | SOLDER | SOLDER | | |
| H-RD8 | 22 | | | SOLDER | SOLDER | | |
| H-RD7 | 20 | | | SOLDER | | | |
| H-RD6 | 22S | | | SOLDER | SOLDER | | |
| H-RD5 | 22 | | | SOLDER | SOLDER | | INACTIVE SER 205-0002 & ON |
| H-RD4 | 22 | | | SOLDER | SOLDER | | |
| H-RD3 | 22S | | | SOLDER | SOLDER | | |
| H-RD2 | 20 | | | SOLDER | SOLDER | | |
| H-RD1 | 16 | | | SOLDER | SOLDER | 1270628 | |

WIRE TABLE

CESSNA AIRCRAFT CO. COMMERCIAL AIRCRAFT DIVISION WICHITA KANSAS

| | NAME | DATE |
|---|---|---|
| DRAWN | RIDDER | 2-13-62 |
| GROUP | | 2-13-62 |
| CHECK | R.R. STUCK | 3-13-62 |
| PROJ | | 3-16-62 |

TITLE: WIRING DIAGRAM — NARCO MK V, VOA-3A, CS-3A, CS-5, VOA-4 & VOA-5 (OPT)

Cessna.

DWG NO. 1270625

SUPERSEDED BY

SUPERSEDES

MODEL 205

REV C

PAGE 17.3

(SK3525)

| LET | REVISION | DATE | APPD |
|---|---|---|---|
| | | | |

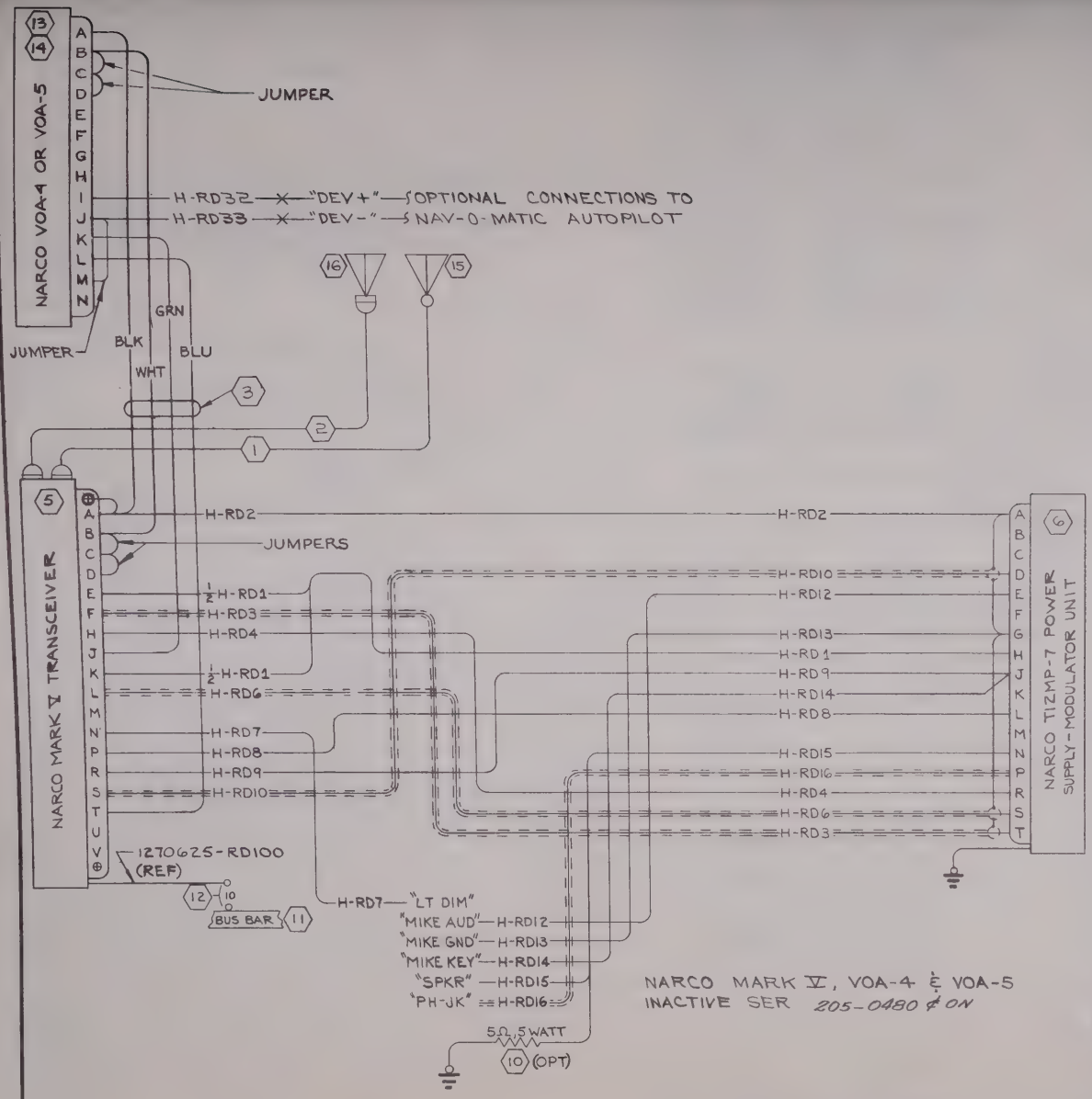


INACTIVE
7 & W 1-2-63
RRS

NARCO MARK V, VOA-4 & VOA-5
INACTIVE SER 205-0480 & ON

| WIRE CODE NO. | GA | MATERIAL | LG | TERMINALS | | SERIALS |
|---|---|---|---|---|---|---|
| | | | | | | |

WIRE TABLE

| ITEM NO. | PART NO. | DESCRIPTION | INSTALLED ON |
|---|---|---|---|
| | | | |

EQUIPMENT TABLE

CESSNA AIRCRAFT CO COMMERCIAL AIRCRAFT DIVISION WICHITA KANSAS

| | NAME | DATE |
|---|---|---|
| DRAWN | G WOOD | 5-25-62 |
| GROUP | C. New Martin | 6-20-62 |
| CHECK | R. Stuck | 6-19-62 |
| PROJ | W. McCarter | 6-20-62 |

TITLE: WIRING DIAGRAM — NARCO MK V, VOA-3A, CS-3A, CS-5, VOA-4, & VOA-5 (OPT)

Cessna.

DWG NO: 1270625

| SUPERSEDED BY | SUPERSEDES | MODEL: | REV: | PAGE: |
|---|---|---|---|---|
| | | 205 | C | 17-24 |

FORM NO. 80-161

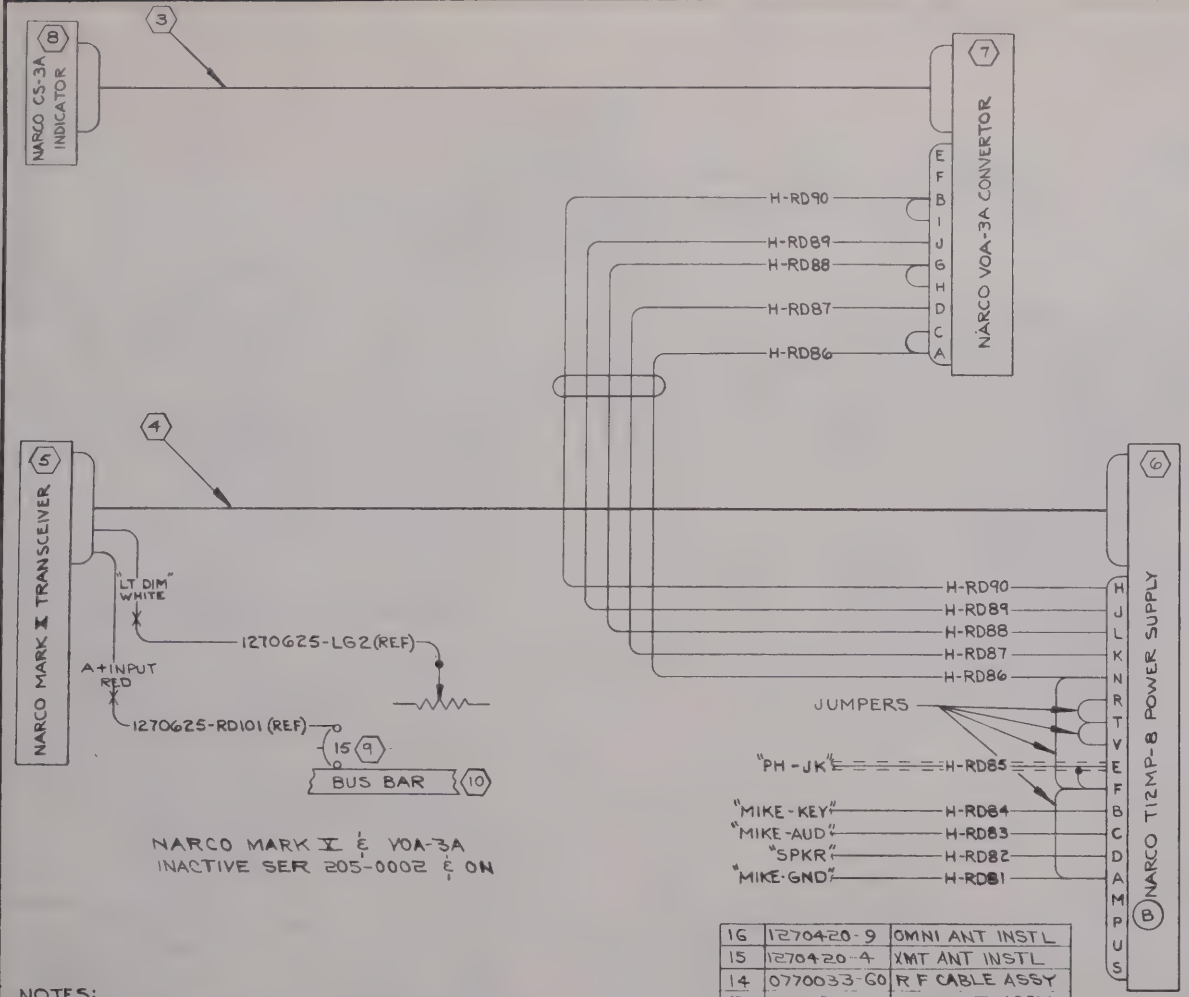


NARCO MARK I & VOA-3A
INACTIVE SER 205-0002 & ON

NOTES:

1. WIRES H-RD81, 82, 83, 84, & 85 TO BE CODED "MIKE-GND", "SPKR", "MIKE-AUD", "MIKE KEY" & "PH-JK" RESPECTIVELY. NUMERICAL CODING PER CES 1100 IS OPTIONAL ON THESE WIRES.

| ITEM NO. | PART NO. | DESCRIPTION | INSTALLED ON |
|---|---|---|---|
| 16 | 1270420-9 | OMNI ANT INSTL | |
| 15 | 1270420-4 | XMT ANT INSTL | |
| 14 | 0770033-60 | R F CABLE ASSY | |
| 13 | 0770033-56 | R F CABLE ASSY | |
| 12 | VOA-5 | CONVERTOR-IND (NARO) | |
| 11 | VOA-4 | CONVERTOR-IND (NARO) | |
| 10 | 1270429-1 | BUS BAR | |
| 9 | S-1232-15 | CIRCUIT BREAKER | |
| 8 | 0812651-3 | INDICATOR | |
| 7 | 0812651-7 | CONVERTOR | |
| 6 | T12MP-8 | POWER UNIT (NARO) | |
| 5 | MARK I | TRANSCEIVER (NARO) | |
| 4 | 90603-60 | POWER CABLE | |
| 3 | 1270628-3 | CABLE ASSY | |
| 2 | 90609-60 | POWER CABLE (NARO) | |

EQUIPMENT TABLE

(SR3694-10)

| CHG LET | REVISION | BY DATE | CHK APPD |
|---|---|---|---|
| A | REMOVED N/A FROM EQUIPMENT TABLE (SR3694-10) | GLW 5-2-62 | RRS |
| B | ADD PAGE 17.3.1 ADD VOA-4 & VOA-5 ADD 90609-60 PWR CABLE PIN B WAS PIN D; PIN D WAS PIN B ON T12MP-8 (SR 3694-10) (SR3923) | GLW 6-8-62 | RRS |
| C | INACTIVATED H-RD86 THRU H-RD90 INACTIVATED DWG (SR 4038) | GLW 12-3-62 | RRS |

INACTIVE 2-63
SER 205-0481 & ON
RRS JM

| WIRE CODE NO. | GA | MATERIAL | LG | TERMINALS | | N/A | SERIALS |
|---|---|---|---|---|---|---|---|
| H-RD92 | 22 | | | SOLDER | S-1370-0 | 1270604 | |
| H-RD91 | 22 | | | SOLDER | S-1370-0 | 1270604 | |
| H-RD90 | 18 | | | SOLDER | SOLDER | 1270630 | INACTIVE SER 205-0002 & ON |
| H-RD89 | 22 | | | SOLDER | SOLDER | | |
| H-RD88 | 22 | | | SOLDER | SOLDER | | |
| H-RD87 | 22 | | | SOLDER | SOLDER | | |
| H-RD86 | 20 | | | SOLDER | SOLDER | | INACTIVE SER 205-0002 & ON |
| H-RD85 | 22S | | | SOLDER | | 1270630 | |
| H-RD84 | 20 | | | SOLDER | | | |
| H-RD83 | 22 | | | SOLDER | | | |
| H-RD82 | 22 | | | SOLDER | | | |
| H-RD81 | 22 | | | SOLDER | | | |

WIRE TABLE

CESSNA AIRCRAFT CO. WICHITA, KANSAS

| | NAME | DATE |
|---|---|---|
| DRAWN | RIDDER | 3-2-62 |
| GROUP | [illegible] | 3-13-62 |
| CHECK | E.R. STYER | 3-15-62 |
| PROJ | H. McPherson | 3-16-62 |

TITLE: WIRING DIAGRAM — NARCO MK I, VOA-3A VOA-4 & VOA-5 (OPT)

Cessna.

DWG NO. 1270625

SUPERSEDED BY | SUPERSEDES | MODEL: 205 | REV C | PAGE 17.3

(SR3923)

| CHG LET | REVISION | DATE | APPD |
|---|---|---|---|
| | | | |

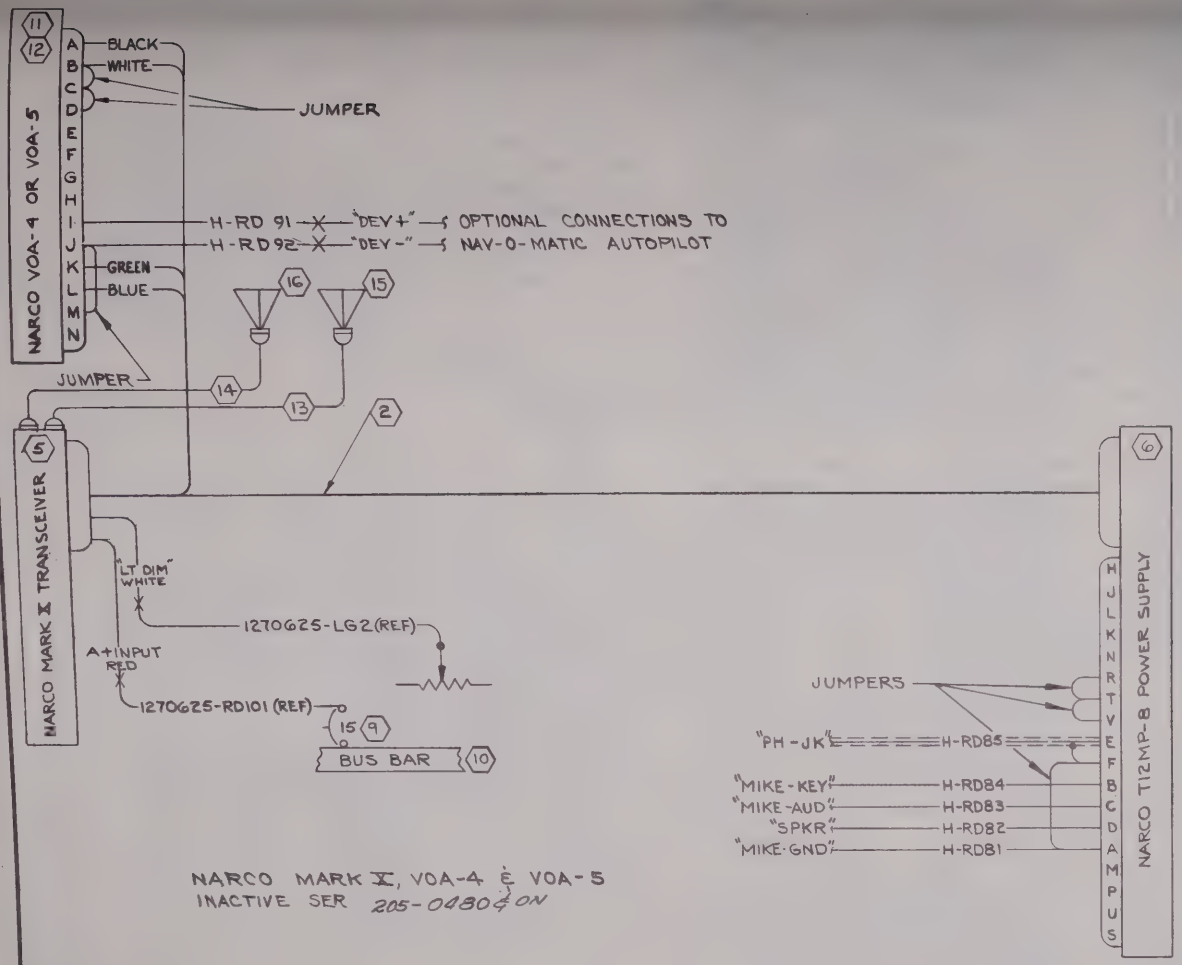


NARCO MARK X, VOA-4 & VOA-5
INACTIVE SER 205-0480 & ON

INACTIVE
NEW 1-2-63
RRS
TM

| WIRE CODE NO. | GA | MATERIAL | LG | TERMINALS | | SERIALS |
|---|---|---|---|---|---|---|

WIRE TABLE

CESSNA AIRCRAFT CO. COMMERCIAL AIRCRAFT DIVISION WICHITA KANSAS

| | NAME | DATE |
|---|---|---|
| DRAWN | G WOOD | 5-25-62 |
| GROUP | H.E.W. Martin | 6-20-62 |
| CHECK | R. Stuck | 6-19-62 |
| PROJ | N. McCarter | 6-20-62 |

TITLE: WIRING DIAGRAM — NARCO MK X, VOA-3A, VOA-4, & VOA-5 (OPT)

Cessna.

DWG NO. 1270625

| SUPERSEDED BY | SUPERSEDES | MODEL: 205 | REV: C | PAGE: 17.3.1 |
|---|---|---|---|---|

| ITEM NO | PART NO. | DESCRIPTION | INSTALLED ON |
|---|---|---|---|

EQUIPMENT TABLE

FORM NO. 80-161

(SR 3694-10)

| CHG LET | REVISION | BY / DATE | CHK / APPD |
|---|---|---|---|
| A | BY REVISION: ADD NOTE 2. DV-318A DYNAVERTER WAS POWER SUPPLY | G L W 8-10-62 | RRS |
| B | TITLE WAS ARC TYPE 318A ADF (OPT) | RGB 12-4-63 | RRS |

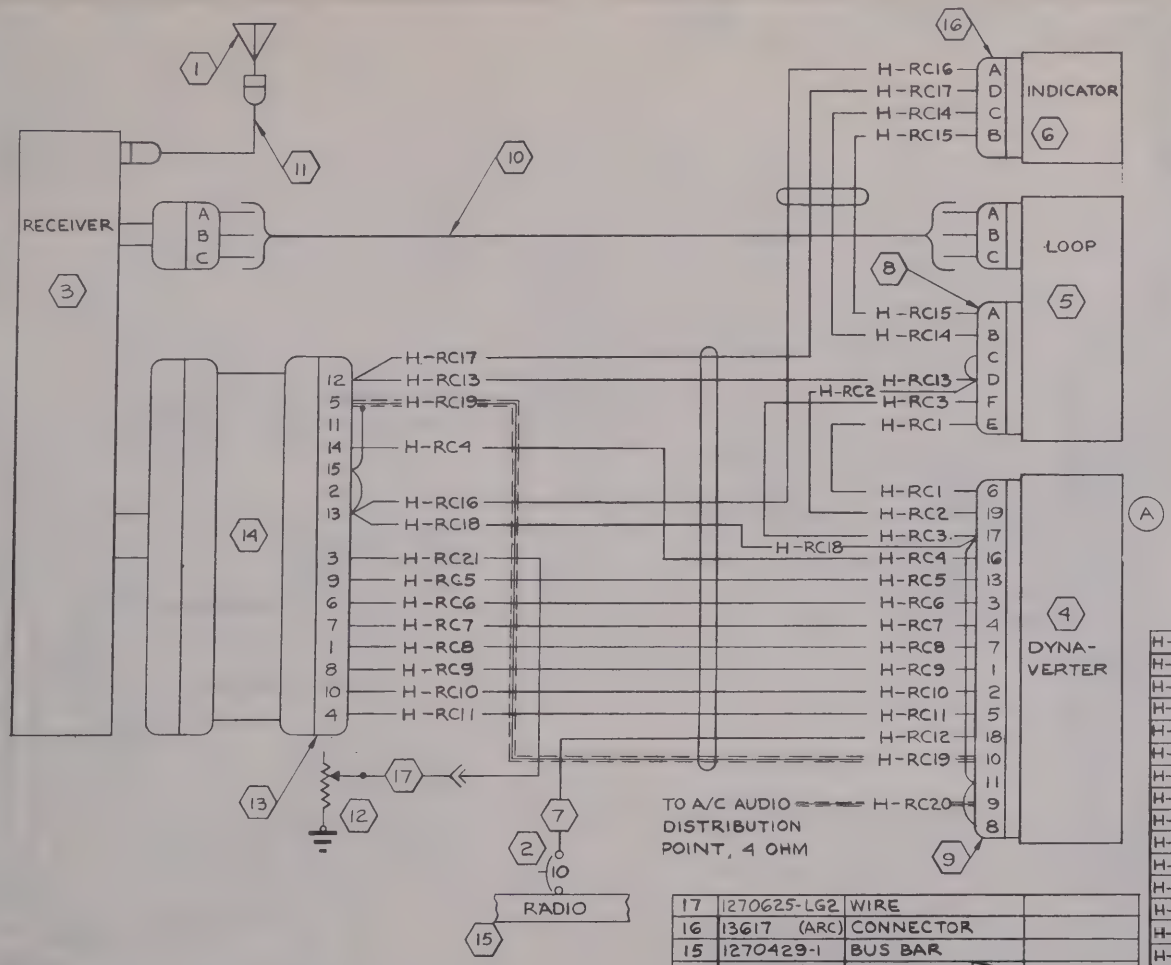


Inactive SER 205-0481 & ON
W.J.K. 6-19-63 RRS TM NMC

NOTES:

1. INSTALL 27873 FILTER KIT ON TSO INSTALLATIONS.
2. (A) PINS 8, 9, 10, 11 OF (4) DYNAVERTER ARE OPEN EXCEPT WHEN OPTIONAL SPEAKER AMPLIFIER (ARC KIT NO. 27624) IS INSTALLED INSIDE THE DYNAVERTER. PIN 5 OF RECEIVER IS A 300 Ω AUDIO DISTRIBUTION POINT WHEN THE SPEAKER AMP KIT IS NOT USED. SCHEMATIC SHOWN IS FOR ADF SYSTEM WITH SPKR AMP INSTALLED.

| ITEM NO | PART NO. | DESCRIPTION | INSTALLED ON |
|---|---|---|---|
| 17 | 1270625-LG2 | WIRE | |
| 16 | 13617 (ARC) | CONNECTOR | |
| 15 | 1270429-1 | BUS BAR | |
| 14 | 27873 (ARC) | FILTER KIT 1 | |
| 13 | 26795 (ARC) | CONNECTOR KIT | |
| 12 | 0111-351 (OHM) | RHEOSTAT | |
| 11 | 18637 (ARC) | SENSE ANT. CABLE | |
| 10 | 17985 | LOOP CABLE ASSY | |
| 9 | 27881 | CONNECTOR | |
| 8 | 19062 (ARC) | CONNECTOR | |
| 7 | 1270625-RD101 | WIRE | |
| 6 | IN-318A (ARC) | INDICATOR | |
| 5 | L-11 | LOOP | |
| 4 | DV-318A | DYNAVERTER | |
| 3 | R-318A (ARC) | RECEIVER | |
| 2 | S-1232-10 | CIRCUIT BREAKER | |
| 1 | 1270420-2 | SENSE ANTENNA | |

EQUIPMENT TABLE

| WIRE CODE NO. | GA | MATERIAL | LG | TERMINALS | | N/A | SERIALS |
|---|---|---|---|---|---|---|---|
| H-RC21 | 22 | | | SOLDER | S-341-2 | 1270629 | |
| H-RC20 | 20S | | | | | | |
| H-RC19 | 22S | | | | SOLDER | | |
| H-RC18 | 18 | | | | | | |
| H-RC17 | 22 | | | | | | |
| H-RC16 | 22 | | | | | | |
| H-RC15 | 22 | | | | | | |
| H-RC14 | 22 | | | | | | |
| H-RC13 | 22 | | | SOLDER | | | |
| H-RC12 | 16 | | | S-1367-2-8 | | | |
| H-RC11 | 22 | | | SOLDER | | | |
| H-RC10 | 22 | | | | | | |
| H-RC9 | 22 | | | | | | |
| H-RC8 | 22 | | | | | | |
| H-RC7 | 22 | | | | | | |
| H-RC6 | 22 | | | | | | |
| H-RC5 | 22 | | | | | | |
| H-RC4 | 16 | | | | | | |
| H-RC3 | 22 | | | | | | |
| H-RC2 | 22 | | | | | | |
| H-RC1 | 22 | | | SOLDER | SOLDER | 1270629 | |

WIRE TABLE

CESSNA AIRCRAFT CO. COMMERCIAL AIRCRAFT DIVISION, WICHITA KANSAS

| | NAME | DATE |
|---|---|---|
| DRAWN | G WOOD | 2-19-62 |
| GROUP | W.R. Martin | 4-24-62 |
| CHECK | R. Stuck | 5-2-62 |
| PROJ | N. McCarter | 5-2-62 |

TITLE: WIRING DIAGRAM — CESSNA ADF 50C (ARC TYPE 318A) (OPT)

Cessna.

DWG NO: 1270625

SUPERSEDED BY: 1270625 PAGE 17.4.1 | SUPERSEDES: | MODEL: 205 | REV: B | PAGE: 17.4

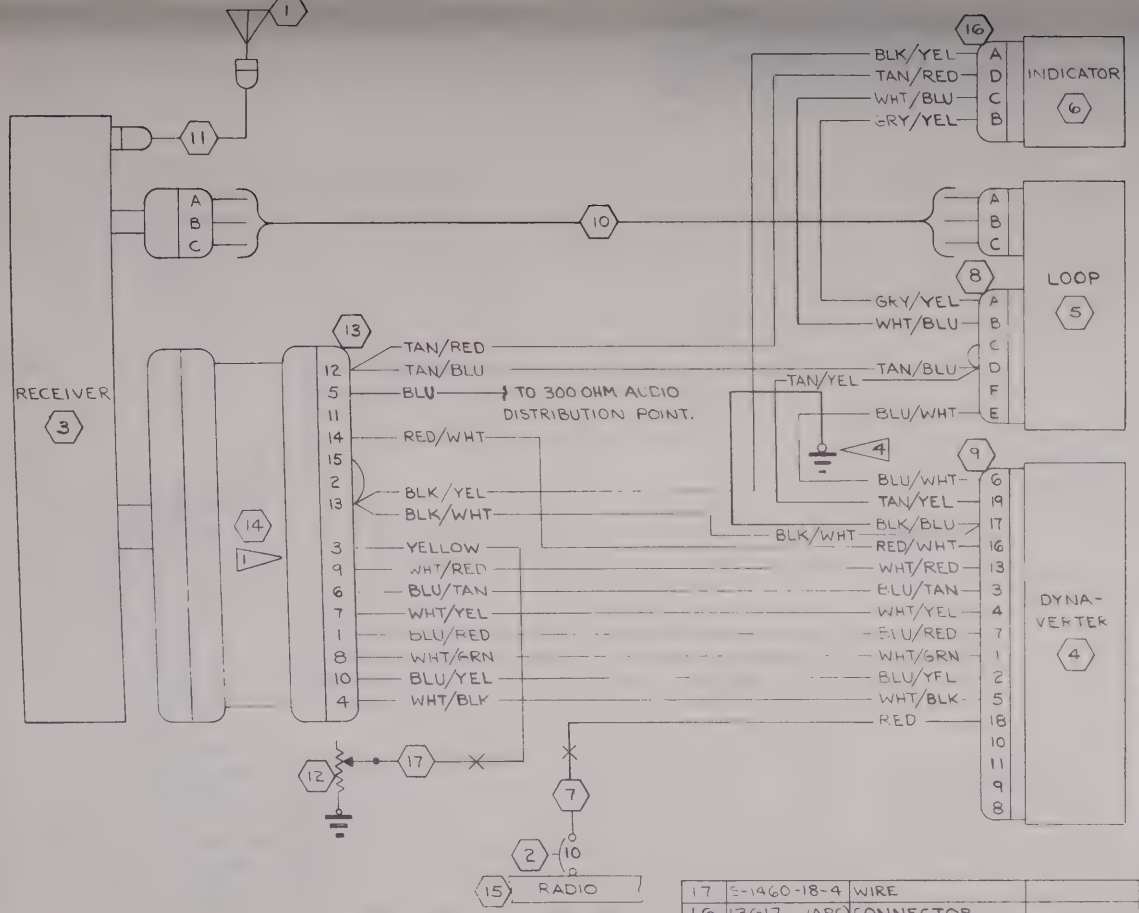


| LET | REVISION | DATE | APPD |
|---|---|---|---|
| A | TITLE WAS ARC TYPE 318A ADF (OPT), ITEM NO. 6, WAS IN-318A, ITEM NO. 5 WAS L-11, ITEM NO. 4 WAS DF-318A, ITEM NO. 3 WAS R-318A (ITEM NO. 14 WAS 27873 FILTER KIT | RGB 12-4-63 | AR3 |

NOTES:

1. INSTALL 27859 FILTER ASSY ON TSO INSTALLATIONS.
2. WHERE WIRE CODE LISTS 2 COLORS, 1ST COLOR IS BASE COLOR & 2ND COLOR IS THE STRIPE.
3. INDICATOR & LOOP CONNECTIONS SHOWN ARE FOR TOP MOUNTED LOOP & SENSE ANTENNAS.
4. BLK/BLU WIRE TO BE GROUNDED TO AIRFRAME NEAR LOOP BUT NOT CONNECTED TO LOOP.

| ITEM NO | PART NO | DESCRIPTION | INSTALLED ON |
|---|---|---|---|
| 17 | S-1460-18-4 | WIRE | |
| 16 | 13617 (ARC) | CONNECTOR | |
| 15 | 1270461-1 | BUS BAR | |
| 14 | 27859 (ARC) | FILTER ASSY 1 | |
| 13 | 26795 (ARC) | CONNECTOR KIT | |
| 12 | R-12Z-75-RS34 | RHEOSTAT (TRTA) | |
| 11 | 18637 (ARC) | SENSE ANT. CABLE | |
| 10 | 17985 (ARC) | LOOP CABLE ASSY | |
| 9 | 17881 (ARC) | CONNECTOR | |
| 8 | 19062 (ARC) | CONNECTOR | |
| 7 | S-1460-16-2 | WIRE | |
| 6 | 27500 (ARC) | INDICATOR | |
| 5 | 18000 (ARC) | LOOP | |
| 4 | 26360-0014 (ARC) | DYNAVERTER | |
| 3 | 25400-1000 (ARC) | RECEIVER | |
| 2 | S-1360-10 | CIRCUIT BREAKER | |
| 1 | 1270420-2 | SENSE ANTENNA | |

EQUIPMENT TABLE

| WIRE CODE NO | GA | MATERIAL | LG | TERMINALS | | N/A | SERIALS |
|---|---|---|---|---|---|---|---|
| YELLOW | 18 | S-1460-18-4 | | S-1370-1 | SOLDER | 1270629 | |
| BLU | 22 | S-1460-22-6 | | | | | |
| BLK/WHT | 18 | S-1460-18-0-9 | | SOLDER | | | |
| TAN/RED | 22 | S-1460-22-10-2 | | | | | |
| BLK/YEL | 22 | S-1460-22-0-4 | | | | | |
| GRY/YEL | 22 | S-1460-22-8-4 | | | | | |
| WHT/BLU | 22 | S-1460-22-9-6 | | | | | |
| TAN/BLU | 22 | S-1460-22-10-6 | | SOLDER | | | |
| RED | 16 | S-1460-16-2 | | S-1370-1 | | | |
| WHT/BLK | 22 | S-1460-22-9-0 | | SOLDER | | | |
| BLU/YEL | 22 | S-1460-22-6-4 | | | | | |
| WHT/GRN | 22 | S-1460-22-9-5 | | | | | |
| BLU/RED | 22 | S-1460-22-6-2 | | | | | |
| WHT/YEL | 22 | S-1460-22-9-4 | | | | | |
| BLU/TAN | 22 | S-1460-22-6-10 | | | | | |
| WHT/RED | 22 | S-1460-22-9-2 | | | SOLDER | | |
| RED/WHT | 18 | S-1460-18-2-9 | | | SOLDER | | |
| BLK/BLU | 22 | S-1460-22-0-6 | | | S-1367-1-8 | | |
| TAN/YEL | 22 | S-1460-22-10-4 | | | SOLDER | | |
| BLU/WHT | 22 | S-1460-22-6-9 | | SOLDER | SOLDER | 1270629 | |

WIRE TABLE

CESSNA AIRCRAFT CO. COMMERCIAL AIRCRAFT DIVISION, WICHITA, KANSAS

| | NAME | DATE |
|---|---|---|
| DRAWN | RIDDER | 6-19-63 |
| GROUP | Ed Moody | 7-8-63 |
| CHECK | R. Stuck | 7-8-63 |
| PROJ | H. McCabe | 7-8-63 |

TITLE: WIRING DIAGRAM — CESSNA ADF 500 (ARC TYPE 318A) (OPT)

Cessna.

DWG NO. 1270625

| SUPERSEDED BY | SUPERSEDES | MODEL | REV | PAGE |
|---|---|---|---|---|
| | 1270625 PAGE 17.4 | 205 & 206 | A | 17.4.1 |

FORM NO 80-161

(SR3694-10)

| CHG LET | REVISION | BY / DATE | CHK / APPD |
|---|---|---|---|
| A | ADDED NOTE 1 & MBT-12 RCVR WITH COLOR CODED WIRE | HLW 11-30-62 | [illegible] |

NOTE:

1. WIRE H-RF2 MAY BE CONNECTED TO ANY AUDIO ISOLATION AMPLIFIER WITH A 500 OHM INPUT WHEN (3) IS NOT USED. WIRE H-RF3 MAY BE CONNECTED DIRECT TO THE PHONE JACK CIRCUIT WHEN (3) IS NOT USED.

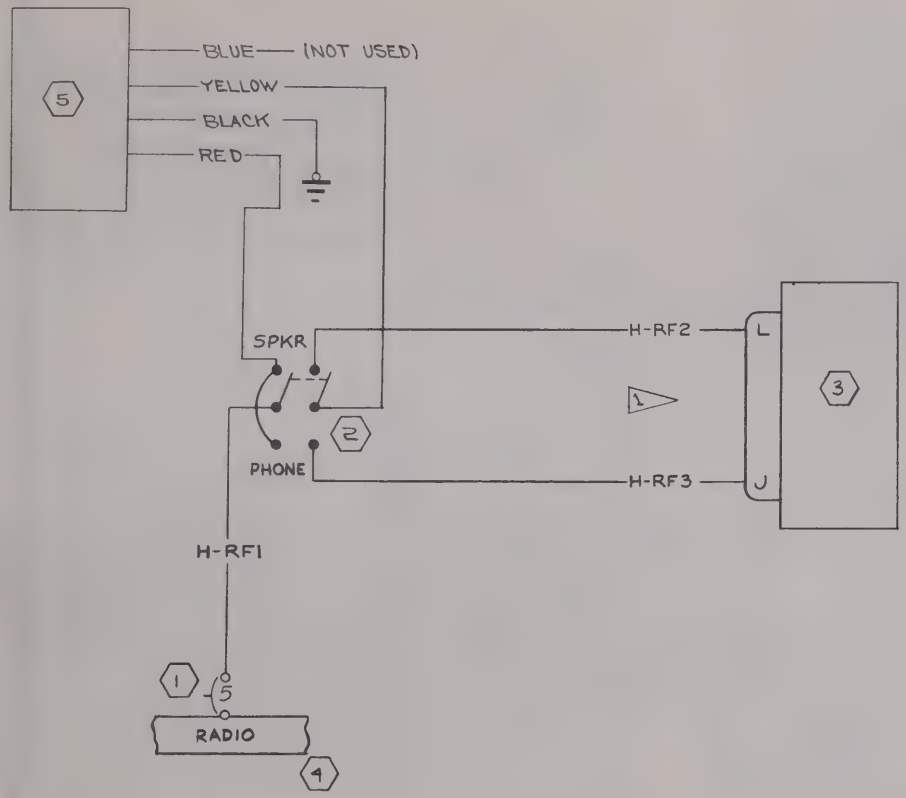


| WIRE CODE NO. | GA | MATERIAL | LG | TERMINALS | | N/A | SERIALS |
|---|---|---|---|---|---|---|---|
| H-RF3 | 22 | | | SOLDER | SOLDER | 0770605 | |
| H-RF2 | 22 | | | SOLDER | SOLDER | 0770605 | |
| H-RF1 | 20 | | | S-1367-1-8 | SOLDER | 0770605 | |

WIRE TABLE

| | | | |
|---|---|---|---|
| 5 | MBT-12 | MKR BCN RCVR (NARO) | |
| 4 | 1270429-1 | BUS BAR | |
| 3 | 0770631-2 | ISOLATION AMP | |
| 2 | 8867K1 | SWITCH | |

CESSNA AIRCRAFT CO. COMMERCIAL AIRCRAFT DIVISION WICHITA, KANSAS

| | NAME | DATE |
|---|---|---|
| DRAWN | G WOOD | 4-5-62 |
| GROUP | [illegible] | 4-24-62 |
| CHECK | [illegible] | [illegible] |

TITLE: WIRING DIAGRAM — MARKER BEACON

Cessna.

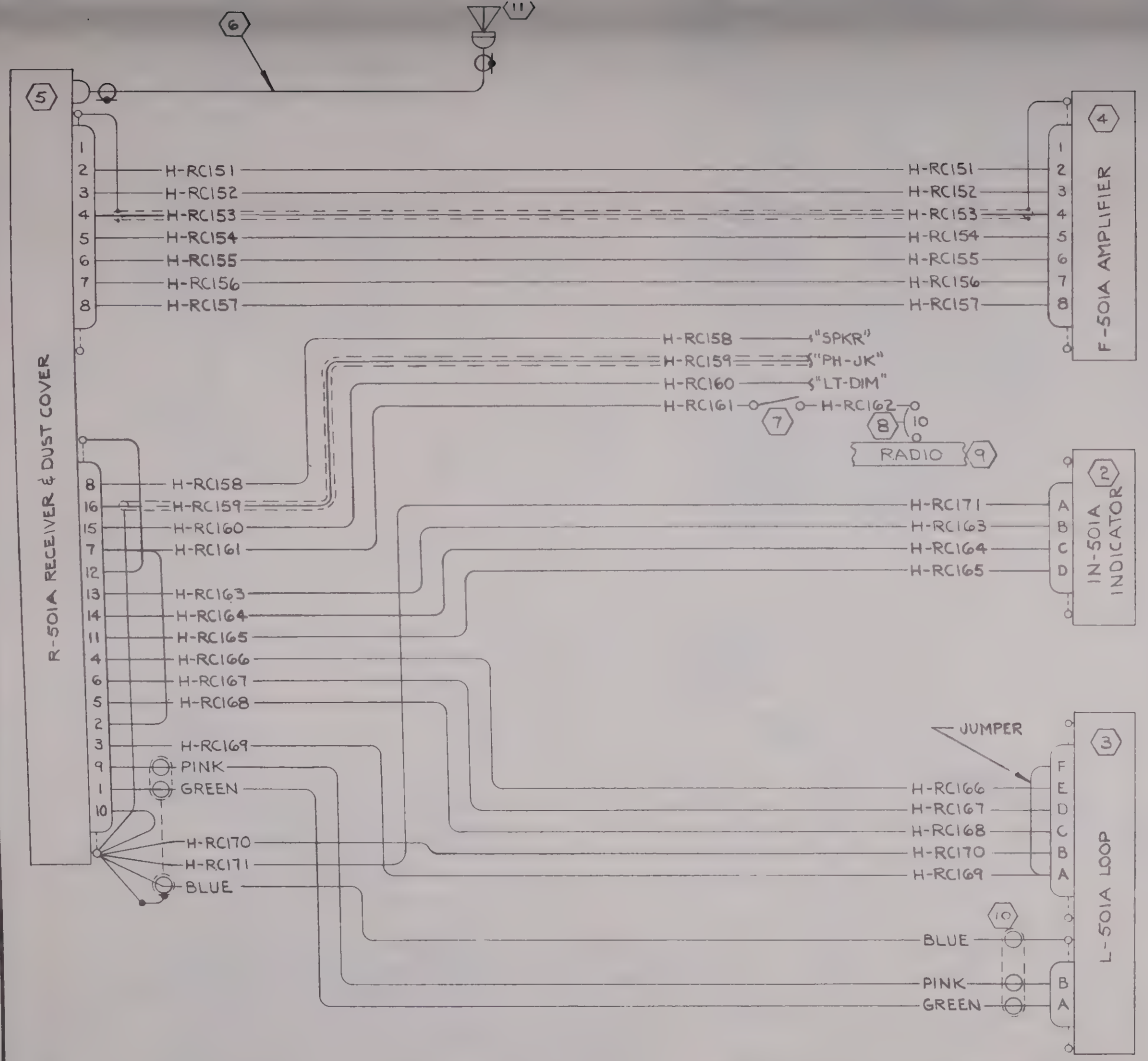


Obsolete never used
W.J.R. 8-15-62
RRS

| WIRE CODE NO | GA | MATERIAL | LG | TERMINALS | | N/A | SERIALS |
|---|---|---|---|---|---|---|---|
| H-RC171 | 22 | | | SOLDER | S-1367-1-4 | 1270633 | |
| H-RC170 | 22 | | | | S-1367-1-4 | | |
| H-RC169 | 22 | | | | SOLDER | | |
| H-RC168 | 22 | | | | | | |
| H-RC167 | 22 | | | | | | |
| H-RC166 | 22 | | | | | | |
| H-RC165 | 22 | | | | | | |
| H-RC164 | 22 | | | | | | |
| H-RC163 | 22 | | | SOLDER | SOLDER | 1270633 | |
| H-RC162 | 18 | | | S-1367-1-8 | S-1367-1-8 | 1270610 | |
| H-RC161 | 18 | | | SOLDER | S-1367-1-8 | 1270633 | |
| H-RC160 | 18 | | | | 1. | | |
| H-RC159 | 22-S | | | | 1. | | |
| H-RC158 | 20 | | | | 1. | | |
| H-RC157 | 22 | | | | SOLDER | | |
| H-RC156 | 16 | | | | | | |
| H-RC155 | 22 | | | | | | |
| H-RC154 | 22 | | | | | | |
| H-RC153 | 22-S | | | | | | |
| H-RC152 | 16 | | | | | | |
| H-RC151 | 18 | | | SOLDER | SOLDER | 1270633 | |

WIRE TABLE

NOTES
1. WIRES H-RC158, 159, & 160 TO BE CODED "SPKR", "PH-JK" & "LT-DIM" RESPECTIVELY. NUMERICAL CODING PER CES 1100 IS OPTIONAL ON THESE WIRES.

| ITEM NO | PART NO. | DESCRIPTION | INSTALLED ON |
|---|---|---|---|
| 11 | 1270420-2 | SENSE ANT. | |
| 10 | 50309 | CABLE, LOOP | |
| 9 | 1270429-1 | BUS BAR | |
| 8 | S-1232-10 | CIRCUIT BKR | |
| 7 | S-1158-2-1 | SWITCH | |
| 6 | 0770033-51 | RF CABLE ASSY | |
| 5 | R-501A | RECEIVER (ARC) | |
| 4 | F-501A | AMPLIFIER (ARC) | |
| 3 | L-501A | LOOP ANT. (ARC) | |
| 2 | IN-501A | INDICATOR (ARC) | |
| 1 | | | |

EQUIPMENT TABLE

CESSNA AIRCRAFT CO. COMMERCIAL AIRCRAFT DIVISION, WICHITA, KANSAS

| | NAME | DATE |
|---|---|---|
| DRAWN | RIDDER | 4/5/62 |
| GROUP | C.V. Metz | 4/11/62 |
| CHECK | R. Stuck | 4-12-62 |
| PROJ | N. McGuire | 4-12-62 |

TITLE: WIRING DIAGRAM — ARC-TYPE 501A, ADF (OPT)

Cessna.

DWG NO. 1270625

| SUPERSEDED BY: | SUPERSEDES | MODEL: 205 | REV: | PAGE: 17.6 |
|---|---|---|---|---|

FORM NO. 80-161

(SR3694-10)

| CHG LET | REVISION | BY / DATE | CHK / APPD |
|---|---|---|---|
| A | ON 86-PF9-11 CONN ADDED JUMPER WIRE FROM PIN 3 TO PIN 6 & H-RD111 NOW PIN 2 WAS TO PIN 3 (SR3694-10) | WJR 6-6-62 | RRS |
| B | ON 24044-03WO CONN WIRE RD119 GOES TO PIN H WAS PIN F. (3694-10) | WJR 6-25-62 | RRS |
| C | ADDED H-RD139 RF CABLE; ADDED SER TO H-RD138 RF CABLE; ADDED 1270420-12 MKR BCN ANT. INSTL TO EQUIP TABLE (SR3951) | WJR 9-27-62 | RRS TM |

NOTES:

1. WIRES H-RD106, 110, 117, 120, 121, 122 & 136 TO BE CODED "LT DIM", "LT DIM", "PH-JK", "SPKR", "MIKE KEY", "MIKE AUD", & "MIKE GND" RESPECTIVELY. NUMERICAL CODING PER CES 1100 IS OPTIONAL ON THESE WIRES.
2. WIRE H-RD116 IS SEPARATED INTO TWO EQUAL GROUPS, ONE GROUP SOLDERED TO PIN "A" THE SECOND GROUP SOLDERED TO PIN "B".

Inactive SER 205-0045 & ON
W.J.R. 5-3-63
H.L.W.
RRS TM

| WIRE CODE NO. | GA | MATERIAL | LG | TERMINALS | | N/A | SERIALS |
|---|---|---|---|---|---|---|---|
| H-RD139 | RG58 A/U | RF CABLE | | SOLDER | S-1367-1-8 S-1367-2-8 | 1270634 | (SR3951) & ON |
| H-RD138 | RG58 A/U | RF CABLE | | SOLDER | S-1367-1-8 S-1367-2-13 | 1270634 | THRU (SR3951) |
| H-RD137 | 18 | | | S-1367-2-8 | (10) | | |
| H-RD136 | 22 | | | SOLDER | 1. | | |
| H-RD135 | 22S | | | | SOLDER | | |
| H-RD134 | 22S | | | | | | |
| H-RD133 | 22S | | | | | | |
| H-RD132 | 22 | | | | | | |
| H-RD131 | 22 | | | | | | |
| H-RD130 | 22 | | | | | | |
| H-RD129 | 22 | | | | | | |
| H-RD128 | 22 | | | | | | |
| H-RD127 | 22 | | | | | | |
| H-RD126 | 22S | | | | SOLDER | | |
| H-RD125 | 22 | | | | S-1367-2-8 | | |
| H-RD124 | 22 | | | | SOLDER | | |
| H-RD123 | 22 | | | | SOLDER | | |
| H-RD122 | 22 | | | | 1. | | |
| H-RD121 | 22 | | | | 1. | | |
| H-RD120 | 20 | | | | 1. | | |
| H-RD119 | 22 | | | | SOLDER | | |
| H-RD118 | 22 | | | | SOLDER | | |
| H-RD117 | 22S | | | | 1. | | |
| H-RD116 | 16 | | | SOLDER | (11) | | |
| | | | | | | | |
| H-RD114 | 22 | | | SOLDER | SOLDER | | |
| H-RD113 | 22 | | | | | | |
| H-RD112 | 22 | | | | | | |
| H-RD111 | 22 | | | | SOLDER | | |
| H-RD110 | 20 | | | | 1. | | |
| H-RD109 | 22 | | | | SOLDER | | |
| H-RD108 | 22 | | | | SOLDER | | |
| H-RD107 | 22S | | | | SOLDER | | |
| H-RD106 | 20 | | | | 1. | | |
| H-RD105 | 22 | | | | SOLDER | | |
| H-RD104 | 22 | | | | | | |
| H-RD103 | 22S | | | | | | |
| H-RD102 | 22S | | | | | | |
| H-RD101 | 18 | | | SOLDER | SOLDER | 1270634 | |

WIRE TABLE

| | PART NO. | DESCRIPTION | INSTALLED ON |
|---|---|---|---|
| 22 | 1270420-12 | MKR BCN ANT. INSTL | |
| 21 | 1270429-1 | BUS BAR | |
| 20 | S-1232-10 | CIRCUIT BREAKER | |
| 19 | 1270420-9 | OMNI ANT. INSTL. | |
| 18 | 1270420-4 | XMTR ANT. INSTL. | |
| 17 | 1270420-5 | MKR BCN ANT. INSTL | |
| 16 | 8867K1 | SWITCH (MOAV) | |
| 15 | 1K | RESISTOR (MOAV) | |
| 14 | 4.7K | RESISTOR (MOAV) | |
| 13 | 24044-04VO | CONN (MOAV) | |
| 12 | 24044-03WO | CONN (MOAV) | |
| 11 | 1300 | CONN (MOAV) | |
| 10 | 1300 | CONN (MOAV) | |
| 9 | 86-PF11-11 | CONN (AMBE) | |
| 8 | 86-PF9-11 | CONN (AMBE) | |
| 7 | SK-19-21C-½ | CONN (CED) | |
| 6 | 4080B | INDICATOR (MOAV) | |
| 5 | 717702-01 | TWIN PAC (MOAV) | |
| 4 | 2374E | NAVPAC (MOAV) | |
| 3 | 0770647-1 | POWER SUPPLY | |

CESSNA AIRCRAFT CO. COMMERCIAL AIRCRAFT DIVISION WICHITA KANSAS

| | NAME | DATE |
|---|---|---|
| DRAWN | RIDDER | 4/20/62 |
| GROUP | C.V. Martin | 5-1-62 |
| CHECK | R. Stuck | 5-2-62 |
| PROJ | H. McNarter | 5-2-62 |

TITLE: WIRING DIAGRAM — MOTOROLA M-135 (OPT)

Cessna.

DWG NO: 1270625

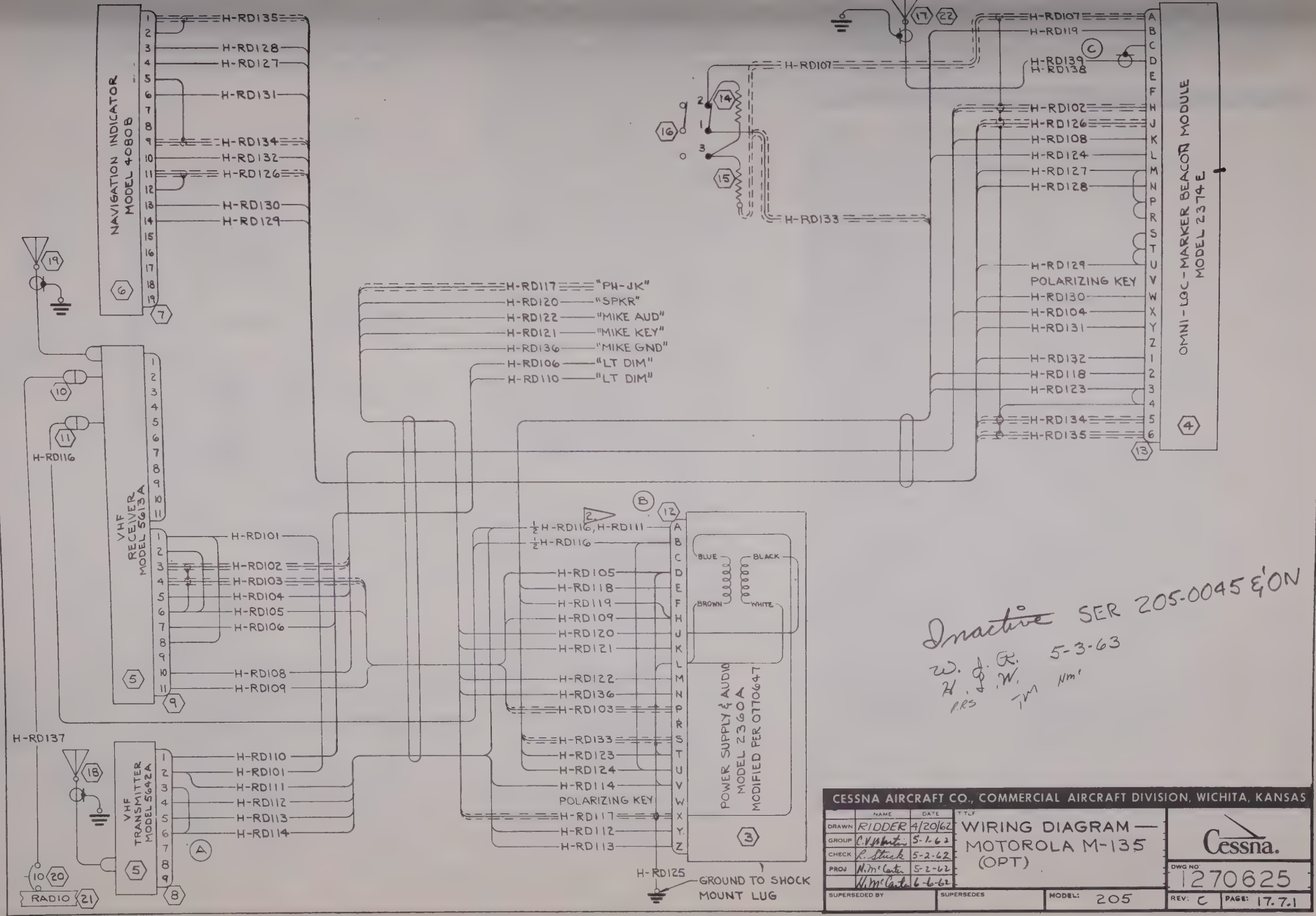
NAVIGATION INDICATOR MODEL 4080B
VHF RECEIVER MODEL 5613A
VHF TRANSMITTER MODEL 5642A
POWER SUPPLY & AUDIO MODEL 2360A MODIFIED PER 0770647
OMNI-LOC-MARKER BEACON MODULE MODEL 2374E
H-RD135
H-RD128
H-RD127
H-RD131
H-RD134
H-RD132
H-RD126
H-RD130
H-RD129
H-RD107
H-RD119
H-RD139
H-RD138
H-RD102
H-RD108
H-RD124
H-RD133
H-RD117 "PH-JK"
H-RD120 "SPKR"
H-RD122 "MIKE AUD"
H-RD121 "MIKE KEY"
H-RD136 "MIKE GND"
H-RD106 "LT DIM"
H-RD110 "LT DIM"
POLARIZING KEY
H-RD116
H-RD101
H-RD103
H-RD104
H-RD105
H-RD108
H-RD109
H-RD137
H-RD111
H-RD112
H-RD113
H-RD114
H-RD125
GROUND TO SHOCK MOUNT LUG
RADIO
BLUE
BLACK
BROWN
WHITE
Inactive SER 205-0045 & ON
W. J. R. 5-3-63
H. J. W.
RRS TM NM'
CESSNA AIRCRAFT CO., COMMERCIAL AIRCRAFT DIVISION, WICHITA, KANSAS
NAME DATE
DRAWN RIDDER 4/20/62
GROUP C.V. Martin 5-1-62
CHECK R. Stuck 5-2-62
PROJ N. McCarter 5-2-62
N. McCarter 6-6-62
TITLE WIRING DIAGRAM — MOTOROLA M-135 (OPT)
Cessna.
DWG NO 1270625
SUPERSEDED BY
SUPERSEDES
MODEL: 205
REV: C
PAGE: 17.7.1

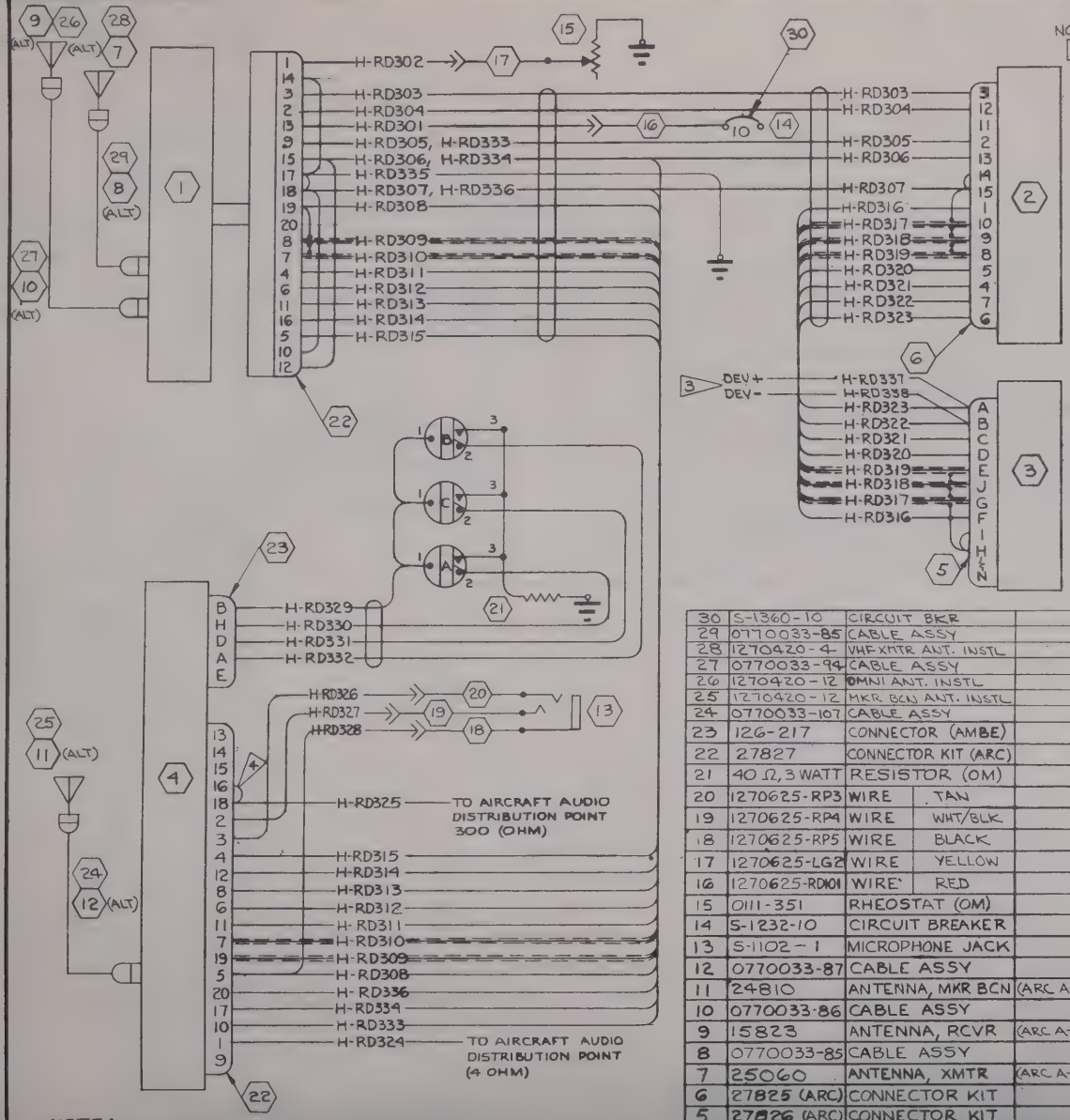


NOTE:

1. MAY BE EITHER (ARC) NO. 27490 OR 27510.
2. MAY BE EITHER TYPE DV-317A OR TYPE DV-317A-1
3. DV-317A DOES NOT INCLUDE MKR BCN LIGHT CIRCUITS. OPTIONAL CONNECTION TO 28900 OMNI COUPLER (NAV-O-MATIC 300 SYSTEM).
4. PART NUMBER FOR OUTPUT FROM PIN 4 IS NOT RECORDED

(SR 3694-10)

NOTES CONTINUED:

6. WIRE MATL PER S-1960, SHIELDED WIRE PER S-1461.

| CHG LET | REVISION | BY / DATE | CHK / APPD |
|---|---|---|---|
| A | PER ECN: ADD NOTES 3,4,5,6 ADD ITEMS 29 THRU 30; ADD WIRES H-RD337 & H-RD338; ADDED COLOR CODE TO WIRE TABLE; H-RD302 18GA WAS 22GA; H-RD306 18GA WAS 16 GA; REMOVED NOTE 2, INACTIVATED DRAWING; TITLE WAS ARC TYPE 317 COMM-NAV SYSTEM (SR 4304) | 8-6-63 WJR | RLS DKM None |

Inactive SER (SR4304) 8-6-63 RLS
W. J. R.

| | | | | | | | |
|---|---|---|---|---|---|---|---|
| H-RD338 | 22 | GRY/GRN | | — | SOLDER | 1270632 | |
| H-RD337 | 22 | GRY/RED | | — | SOLDER | 1270632 | |
| H-RD336 | 16 | BLACK | | SOLDER | SOLDER | 1270632 | |
| H-RD335 | 16 | BLACK | | S-1367-2-8 | SOLDER | | |
| H-RD334 | 16 | RED | | SOLDER | | | |
| H-RD333 | 22 | TAN/BLU | | | | | |
| H-RD332 | 22 | WHT/YEL | | | | | |
| H-RD331 | 22 | WHT/GRN | | | | | |
| H-RD330 | 22 | WHT/BLU | | | | | |
| H-RD329 | 22 | WHT/TAN | | | | | |
| H-RD328 | 22 | BLACK | | | | | |
| H-RD327 | 22 | WHT/BLK | | | | | |
| H-RD326 | 22 | TAN | | | | | |
| H-RD325 | 22 | BLUE | | | | | |
| H-RD324 | 20 | GREEN | | | | | |
| H-RD323 | 22 | GRY/BLU | | | | | |
| H-RD322 | 22 | WHT/RED | | | | | |
| H-RD321 | 22 | BLU/WHT | | | | | |
| H-RD320 | 22 | WHT/TAN | | | | | |
| H-RD319 | 22-S | BLU/WHT | | | | | |
| H-RD318 | 22-S | BLU/RED | | | | | |
| H-RD317 | 22-S | BLU/BLK | | | | | |
| H-RD316 | 22 | BLK/YEL | | | | | |
| H-RD315 | 22 | WHT/BLU | | | | | |
| H-RD314 | 22 | TAN/WHT | | | | | |
| H-RD313 | 22 | BLU/GRN | | | | | |
| H-RD312 | 22 | GRY/BLU | | | | | |
| H-RD311 | 22 | WHT/YEL | | | | | |
| H-RD310 | 22-S | BLU/GRN | | | | | |
| H-RD309 | 22-S | BLU/YEL | | | | | |
| H-RD308 | 22 | BLK/BLU | | | | | |
| H-RD307 | 22 | BLK/RED | | | | | |
| H-RD306 | 18 | RED/BLK | | | | | |
| H-RD305 | 22 | TAN/BLU | | | | | |
| H-RD304 | 22 | BLU/BLK | | | | | |
| H-RD303 | 22 | BLU/YEL | | SOLDER | | | |
| H-RD302 | 18 | YELLOW | | S-341-2 | | | |
| H-RD301 | 16 | RED | | S-341-1 | SOLDER | 1270632 | |
| WIRE CODE NO. | GA | MATERIAL COLOR CODE | LG | TERMINALS | | N/A | SERIALS |

WIRE TABLE

| | | | | |
|---|---|---|---|---|
| 30 | S-1360-10 | CIRCUIT BKR | | |
| 29 | 0770033-85 | CABLE ASSY | | |
| 28 | 1270420-4 | VHF XMTR ANT. INSTL | | |
| 27 | 0770033-94 | CABLE ASSY | | |
| 26 | 1270420-12 | OMNI ANT. INSTL | | |
| 25 | 1270420-12 | MKR BCN ANT. INSTL | | |
| 24 | 0770033-107 | CABLE ASSY | | |
| 23 | 126-217 | CONNECTOR (AMBE) | | |
| 22 | 27827 | CONNECTOR KIT (ARC) | | |
| 21 | 40 Ω, 3 WATT | RESISTOR (OM) | | |
| 20 | 1270625-RP3 | WIRE | TAN | |
| 19 | 1270625-RP4 | WIRE | WHT/BLK | |
| 18 | 1270625-RP5 | WIRE | BLACK | |
| 17 | 1270625-LG2 | WIRE | YELLOW | |
| 16 | 1270625-RD101 | WIRE | RED | |
| 15 | 0111-351 | RHEOSTAT (OM) | | |
| 14 | S-1232-10 | CIRCUIT BREAKER | | |
| 13 | S-1102-1 | MICROPHONE JACK | | |
| 12 | 0770033-87 | CABLE ASSY | | |
| 11 | 24810 | ANTENNA, MKR BCN | | (ARC A-24A) |
| 10 | 0770033-86 | CABLE ASSY | | |
| 9 | 15823 | ANTENNA, RCVR | | (ARC A-13B) |
| 8 | 0770033-85 | CABLE ASSY | | |
| 7 | 25060 | ANTENNA, XMTR | | (ARC A-25A) |
| 6 | 27825 (ARC) | CONNECTOR KIT | | |
| 5 | 27826 (ARC) | CONNECTOR KIT | | |
| 4 | 28490-0014 | DYNAVERTER (ARC | | DV-317A-1 |
| 3 | 1 (ARC) | INDICATOR | | |
| 2 | 24660 | CONVERTER (ARC | | R-317A) |
| 1 | 24650-1000 | RCVR-XMTR (ARC | | RT-317A) |
| PART NO. | | DESCRIPTION | | INSTALLED ON |

COMMERCIAL AIRCRAFT DIVISION WICHITA KANSAS

| | NAME | DATE |
|---|---|---|
| DRAWN | G WOOD | 3-24-62 |
| GROUP | | |
| CHECK | | |
| PROJ | | |

TITLE: WIRING DIAGRAM — CESSNA NAV/COMM 500 (OPT) (ARC TYPE 317A)

Cessna.

DWG NO: 1270625

REV

PAGE

NOTES:

1. INDICATOR MAY BE EITHER (ARC) NO. 27490 OR 27510.
2. OPTIONAL CONNECTION TO (ARC) NO. 28900 OMNI COUPLER (NAV-O-MATIC 300 SYSTEM).

(SR4304)

| CHG LET | REVISION | BY DATE | CHK APPD |
|---|---|---|---|
| A | ADDED JUMPER WIRE FROM PIN 15 TO PIN 14 ON 27825 CONNECTOR KIT; INACTIVATED DRAWING (SR4456)& (SR4457) | WJR 7-7-64 | RRS JPM WJW |

Inactive SER 206-0275 & ON
205-0577 & ON
WJR 7-7-64 RRS WJW

| WIRE CODE NO | GA | MATERIAL | LG | TERMINALS | | N/A | SERIALS |
|---|---|---|---|---|---|---|---|
| BLK/YEL | 22 | S-1460-22-0-4 | | SOLDER | SOLDER | 1270466 | |
| BLU/BLK | 22S | S-1461-22-6-0 | | | | | |
| BLU/RED | 22S | S-1461-22-6-2 | | | | | |
| BLU/WHT | 22S | S-1461-22-6-9 | | | | | |
| WHT/TAN | 22 | S-1460-22-9-10 | | | | | |
| BLU/WHT | 22 | S-1460-22-6-9 | | | | | |
| WHT/RED | 22 | S-1460-22-9-2 | | | | | |
| GRY/BLU | 22 | S-1460-22-8-6 | | | SOLDER | | |
| GRY/GRN | 22 | S-1460-22-8-5 | | | S-1370-1 | | |
| GRY/RED | 22 | S-1460-22-8-2 | | | S-1370-1 | | |
| BLU/TAN | 22 | S-1460-22-6-10 | | | | | |
| GREEN | 20 | S-1460-20-5 | | | S-1370-1 | | |
| BLACK | 22 | S-1460-22-0 | | | S-1370-1 | | |
| RED/WHT | 18 | S-1460-18-2-9 | | | S-1367-1-6 | | |
| TAN | 22 | S-1460-22-10 | | | S-1370-1 | | |
| WHT/BLK | 22 | S-1460-22-9-0 | | | S-1370-1 | | |
| BLUE | 22 | S-1460 22-6 | | | S-1370-1 | | |
| BLU/WHT | 22 | S-1460-22-6-9 | | | | | |
| BLU/TAN | 22 | S-1460-22-6-10 | | | | | |
| BLU/WHT | 22 | S-1460-22-6-9 | | | | | |
| BLU/TAN | 22 | S-1460-22-6-10 | | SOLDER | | | |
| BLK/WHT | 18 | S-1460-18-0-9 | | S-1370-1 | S-1367-1-8 | | |
| WHT/RED | 22 | S-1460-22-9-2 | | SOLDER | SOLDER | | |
| BLU/YEL | 22S | S-1461-22-6-4 | | | | | |
| WHT/YEL | 22 | S-1460-22-9-4 | | | SOLDER | | |
| WHT/GRN | 22 | S-1460-22-9-5 | | | | | |
| WHT/BLU | 22 | S-1460-22-9-6 | | | | | |
| WHT/TAN | 22 | S-1460-22-9-10 | | | | | |
| WHT/BLU | 22 | S-1460-22-9-6 | | | | | |
| TAN/WHT | 22 | S-1460-22-10-9 | | | | | |
| BLU/GRN | 22 | S-1460-22-6-5 | | | | | |
| GRY/BLU | 22 | S-1460-22-8-6 | | | | | |
| WHT/YEL | 22 | S-1460-22-9-4 | | | | | |
| BLU/GRN | 22S | S-1461-22-6-5 | | | SOLDER | | |
| BLU/YEL | 22S | S-1461-22-6-4 | | | S-1370-1 | | |
| BLK/BLU | 22 | S-1460-22-0-6 | | | SOLDER | | |
| BLACK | 16 | S-1460-16-0 | | | SOLDER | | |
| BLK/RED | 22 | S-1460-22-0-2 | | | SOLDER | | |
| BLACK | 16 | S-1460-16-0 | | | S-1367-2-8 | | |
| RED/BLU | 16 | S-1460-16-2-6 | | | SOLDER | | |
| RED/BLK | 18 | S-1460-18-2-0 | | | | | |
| TAN/BLU | 22 | S-1460-22-10-6 | | | | | |
| TAN/BLU | 22 | S-1460-22-10-6 | | | SOLDER | | |
| RED | 16 | S-1460-16-2 | | | S-1370-2 | | |
| BLU/BLK | 22 | S-1460-22-6-0 | | | SOLDER | | |
| BLU/YEL | 22 | S-1460-22-6-4 | | | SOLDER | | |
| YELLOW | 18 | S-1460-18-4 | | SOLDER | S-1370-1 | 1270466 | |

WIRE TABLE

| ITEM NO | PART NO | DESCRIPTION | INSTALLED ON |
|---|---|---|---|
| 25 | MS25041-1-328 | LIGHT, CLEAR | |
| 24 | MS25041-10-328 | LIGHT, BLUE | |
| 23 | MS25041-4-328 | LIGHT, AMBER | |
| 22 | S-382-2 | SWITCH | |
| 21 | 40Ω 3 WATT | RESISTER (OM) | |
| 20 | 1270461-1 | BUS BAR | |
| 19 | S-1360-10 | CIRCUIT BREAKER | |
| 18 | RED | WIRE | |
| 17 | R-12½-75-RS34 | RHEOSTAT (TRTA) | |
| 16 | YELLOW | WIRE | |
| 15 | 0770033-107 | CABLE ASSY | |
| 14 | 0770033-85 | CABLE ASSY | |
| 13 | 0770033-94 | CABLE ASSY | |
| 12 | 1270420-12 | ANT. INSTL-MKR BCN | |
| 11 | 25060 | ANT. INSTL-VHF | (ARC |
| 10 | 1270420-9 | ANT. INSTL-OMNI | |
| 9 | S-1360-5 | CIRCUIT BREAKER | |
| 8 | 426-195 | CONNECTOR (AMBE) | |
| 7 | 27826 | CONNECTOR KIT (ARC) | |
| 6 | 27825 | CONNECTOR KIT (ARC) | |
| 5 | 27827 | CONNECTOR KIT (ARC) | |
| 4 | 31630-0014 | DYNAVERTER (ARC) | |
| 3 | 1 | INDICATOR (ARC) | |
| 2 | 24660 | CONVERTER (ARC) | |
| 1 | 24650-1000 | RCVR-XMTR (ARC) | |

EQUIPMENT TABLE

CESSNA AIRCRAFT CO., COMMERCIAL AIRCRAFT DIVISION, WICHITA, KANSAS

| | NAME | DATE |
|---|---|---|
| DRAWN | RIDDER | 8-6-63 |
| GROUP | [illegible] | 10 11-63 |
| CHECK | R. Stuck | 10-10-63 |
| PROJ | H. McCarter | 10 11 63 |

TITLE: WIRING DIAGRAM — CESSNA NAV/COMM 500 (OPT) (ARC TYPE 317A)

Cessna.

DWG NO 1270625

| SUPERSEDED BY | PAGE | SUPERSEDES | MODEL | REV | PAGE |
|---|---|---|---|---|---|
| 1270675 | 17.10 | 1270625 PAGE 17.8 | 205 & 206 | A | 17.8.1 |

FORM NO 80-161

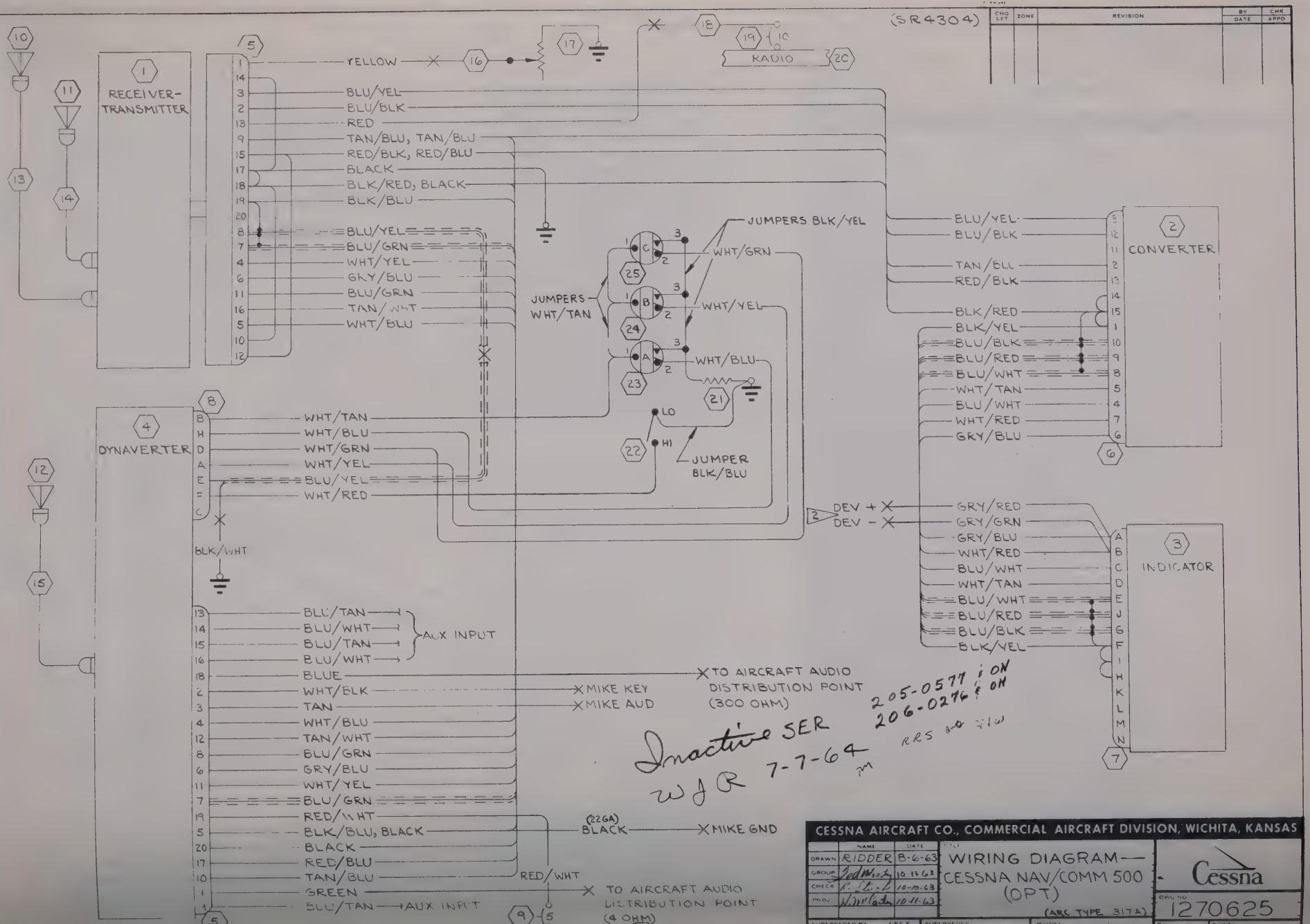
(SR4304)
CHG LET | ZONE | REVISION | BY DATE | CHK APPD
1 RECEIVER-TRANSMITTER
2 CONVERTER
3 INDICATOR
4 DYNAVERTER
5
RADIO 2C
YELLOW
BLU/YEL
BLU/BLK
RED
TAN/BLU, TAN/BLU
RED/BLK, RED/BLU
BLACK
BLK/RED, BLACK
BLK/BLU
BLU/YEL
BLU/GRN
WHT/YEL
GRY/BLU
BLU/GRN
TAN/WHT
WHT/BLU
JUMPERS BLK/YEL
WHT/GRN
WHT/YEL
WHT/BLU
JUMPERS WHT/TAN
LO
HI
JUMPER BLK/BLU
BLU/YEL
BLU/BLK
TAN/BLU
RED/BLK
BLK/RED
BLK/YEL
BLU/BLK
BLU/RED
BLU/WHT
WHT/TAN
BLU/WHT
WHT/RED
GRY/BLU
DEV +
DEV -
GRY/RED
GRY/GRN
GRY/BLU
WHT/RED
BLU/WHT
WHT/TAN
BLU/WHT
BLU/RED
BLU/BLK
BLK/YEL
WHT/TAN
WHT/BLU
WHT/GRN
WHT/YEL
WHT/RED
BLU/YEL
BLK/WHT
BLU/TAN
BLU/WHT
BLU/TAN
BLU/WHT
AUX INPUT
BLUE
WHT/BLK
TAN
WHT/BLU
TAN/WHT
BLU/GRN
GRY/BLU
WHT/YEL
BLU/GRN
RED/WHT
BLK/BLU, BLACK
BLACK
RED/BLU
TAN/BLU
GREEN
BLU/TAN
AUX INPUT
MIKE KEY
MIKE AUD
TO AIRCRAFT AUDIO DISTRIBUTION POINT (300 OHM)
(22GA) BLACK
MIKE GND
RED/WHT
TO AIRCRAFT AUDIO DISTRIBUTION POINT (4 OHM)
205-0577 i ON
206-0276 i ON
Inactive SER
WJR 7-7-64
RRS
CESSNA AIRCRAFT CO., COMMERCIAL AIRCRAFT DIVISION, WICHITA, KANSAS
DRAWN RIDDER 8-6-63
GROUP 10-11-63
CHECK 10-10-63
PROJ 10-11-63
WIRING DIAGRAM— CESSNA NAV/COMM 500 (OPT)
(ARC TYPE 317A)
Cessna
DWG NO 1270625

(SR 3694-10)

| CHG LET | REVISION | BY DATE | CHK APPD |
|---|---|---|---|
| A | "D" PREFIX ON ALL WIRES ON SHT 2 WAS "H". DELETED 91-MPFGL CONNECTOR DELETED 91-MPF6 CONNECTOR. CONN. REPLACED BY S-1370-0 SPLICES ON COLORED WIRES AS SHOWN IN WIRE TABLE. 2A FUSE IN CONTROL PANEL WAS 5A FUSE. ADDED NOTE 4 OBSOLETED H-RH1 THRU H-RH15 | GLW 2-19-63 | JM RRS |
| B | BY REVISION: ADD MODEL 206 ADD NOTE 5. S-1360-10 CKT BKR WAS S-1232-10 S-1360-15 CKT BKR WAS S-1232-15 1270461-1 BUS BAR WAS 1270429-1. REMOVED OBS NEVER USED FROM WIRES H-RH1 THRU H-RH8 (SR4038-9)(SR3981-9) | GLW 8-4-63 | HRW RRS JM HMC |

NOTES:

1. CIRCUITS SHOWN TRAIL ANTENNA "IN", CHANNEL ONE SELECTED.
2. CUT RF CABLE ON TUNER DUST COVER TO LENGTH REQD BY INSTL AND TERMINATE WITH UG88 C/U CONNECTOR. THIS CONNECTOR MATES WITH UG-89/U CONNECTOR ON CONTROL PANEL.
3. WIRE LENGTHS TO BE DETERMINED ON 1270636-2 & -3.
4. "D" PREFIX USED IN FIELD ON THIS DRAWING INSTEAD OF "H" BECAUSE CABLE ASSYS ARE SAME AS THOSE IN MODEL 182. THIS DIAGRAM IS IDENTICAL TO 0770610 PAGE 17.15. THIS WIRING DIAGRAM IS FOR REFERENCE ONLY. COMPLETE WIRE NUMBERS ARE 0770610-XXX.
5. WHEN THIS INSTALLATION IS USED IN COMBINATION WITH AN ISOLATION AMPLIFIER AND THE SPEAKER CIRCUIT IS NOT USED, GREEN SPEAKER WIRE IS CONNECTED TO GND THRU AN OHMITE 50HM 10 WATT AXIAL LEAD RESISTOR OR EQUIVALENT.

| ITEM NO | PART NO. | DESCRIPTION | INSTALLED ON |
|---|---|---|---|
| 32 | 1270625-RP3 | WIRE | |
| 31 | 1270625-RP4 | WIRE | |
| 30 | 1270625-RP5 | WIRE | |
| 29 | MS3057-10B | CLAMP | |
| 28 | PL-112 | CONNECTOR | |
| 27 | | | |
| 26 | | | |
| 25 | 26-4200-16S | CONNECTOR (AMBE) | |
| 24 | 0770033-89 | CABLE ASSY | |
| 23 | 0770033-70 | CABLE ASSY | |
| 22 | 0770033-71 | CABLE ASSY | |
| 21 | S-1360-15 | CIRCUIT BREAKER | |
| 20 | S-1360-10 | CIRCUIT BREAKER | |
| 19 | 1270461-1 | BUS BAR | |
| 18 | 1270625-LB1 | WIRE | |
| 17 | 1270625-LG1 | WIRE | |
| 16 | 1270625-LG2 | WIRE | |
| 15 | S-1103-1 | PHONE JACK | |
| 14 | 1270625-RP2 | WIRE | |
| 13 | S-1102-1 | MIKE JACK | |
| 12 | 1270625-RP1 | WIRE | |
| 11 | 0411062-9 | SPEAKER | |
| 10 | 1270420-10 | SUNAIR ANT. | |
| 9 | 0770033-88 | CABLE ASSY | |
| 8 | 0770033-39 | CABLE ASSY | |
| 7 | 0814308-2 | ANT. WIRE | |
| 6 | 0770630-2 | CONTROL PANEL | |
| 5 | 0812509-24 | COIL ASSY | |
| 4 | 0812800-56 | RF INVERTER | |
| 3 | 1270611-7 | REEL ASSY | |
| 2 | 0770627-2 | MOTOR ASSY | |
| 1 | T-5-DA | TRANSCEIVER (SUNA) | |

EQUIPMENT TABLE

| WIRE CODE NO. | GA | MATERIAL | LG | TERMINALS | | N/A | SERIALS |
|---|---|---|---|---|---|---|---|
| H-RH15 | | 8899 (BDN) | | 235-860 CLIP (JDN) | SOLDER | 0770627 | OBSOLETE (NEVER USED) |
| H-RH14 | | | | | | | |
| H-RH13 | | | | | | | |
| H-RH12 | | | | | | | |
| H-RH11 | | | | | | | |
| H-RH10 | | 8899 (BDN) | | 235-860 CLIP (JDN) | | 0770627 | OBSOLETE (NEVER USED) |
| H-RH9 | 14 | | | S-1367-2-6 | | 1270636 | |
| H-RH8 | 14 | | | S-1367-2-6 | | | |
| H-RH7 | 14 | | | S-1367-2-6 | | | |
| H-RH6 | 14 | | | S-1367-2-6 | | | |
| H-RH5 | 20 | | | S-341-2 | | | |
| H-RH4 | 14 | | | S-1367-2-6 | | | |
| H-RH3 | 14 | | | S-1367-2-6 | SOLDER | 1270636 | |
| H-RH2 | 14 | | | S-1367-2-6 | S-1367-2-6 | 0770630 | |
| H-RH1 | 14 | | | S-1367-2-8 | S-1367-2-6 | 0770630 | |
| BLUE | 20 | 8523 (BDN) | 3 | SOLDER | S-1370-0 | 1270636 | |
| GRAY | 20 | | | | | | |
| YELLOW | 20 | | | | | | |
| ORANGE | 20 | | | | | | |
| RED | 20 | | | | | | |
| VIOLET | 20 | 8523 (BDN) | 3 | SOLDER | S-1370-0 | 1270636 | |

WIRE TABLE

CESSNA AIRCRAFT CO. COMMERCIAL AIRCRAFT DIVISION, WICHITA, KANSAS

| | NAME | DATE |
|---|---|---|
| DRAWN | RIDDER | 5-15-62 |
| GROUP | P.V. Martin | 5-24-62 |
| CHECK | R. Stuck | 5-25-62 |
| PROJ | H. McGuire | 5-25-62 |

T.T.E: WIRING DIAGRAM — SUNAIR T-5-DA (OPT)

Cessna.

DWG NO: 1270625

| SUPERSEDED BY | SUPERSEDES | MODEL: | REV: | PAGE: |
|---|---|---|---|---|
| | | 205, 206 | B | 17.9 |

FORM NO. 80-161

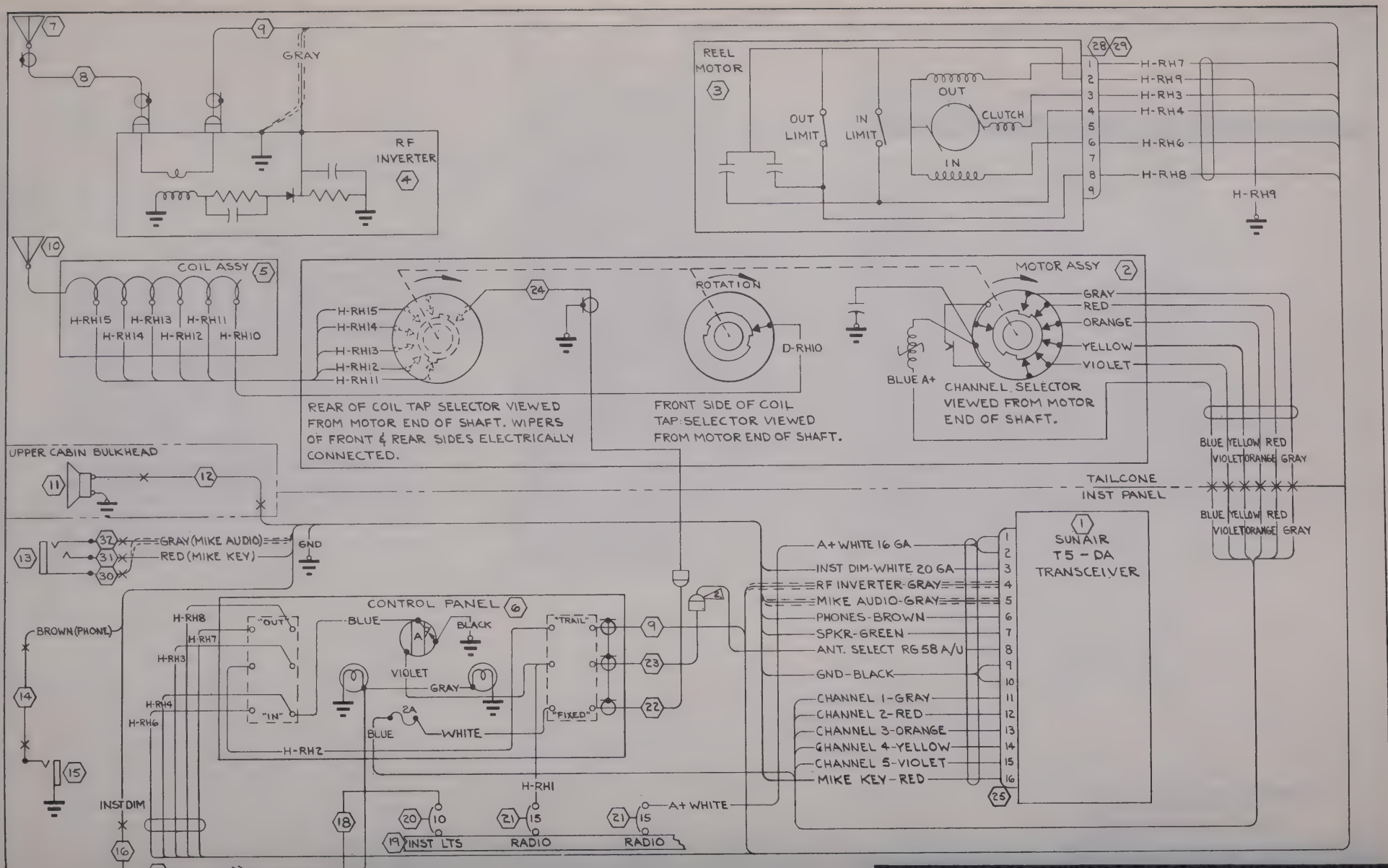


CESSNA AIRCRAFT CO., COMMERCIAL AIRCRAFT DIVISION, WICHITA, KANSAS

| | NAME | DATE |
|---|---|---|
| DRAWN | RIDDER | 5-15-62 |
| GROUP | V. Martin | 5-20-62 |
| CHECK | E. Stuck | 5-25-62 |
| PROJ | H. M. Cates | 5-25-62 |

TITLE: WIRING DIAGRAM — SUNAIR T-5-DA (OPT)

Cessna.

DWG NO. 1270625

(SR3674-10)

| CHG LET | REVISION | BY DATE | CHK APPD |
|---|---|---|---|
| A | H-RD214 WIRE 22 GAGE WAS 22.5 GAGE ADD D,E,F&G TO 12-195 CONNECTOR J S-1360-15 CKT BKR & 1270461-1 BUS BAR. 030-2013-00 WAS 12-195 (SR4038)(SR3983) | WJR 3-8-63 | |

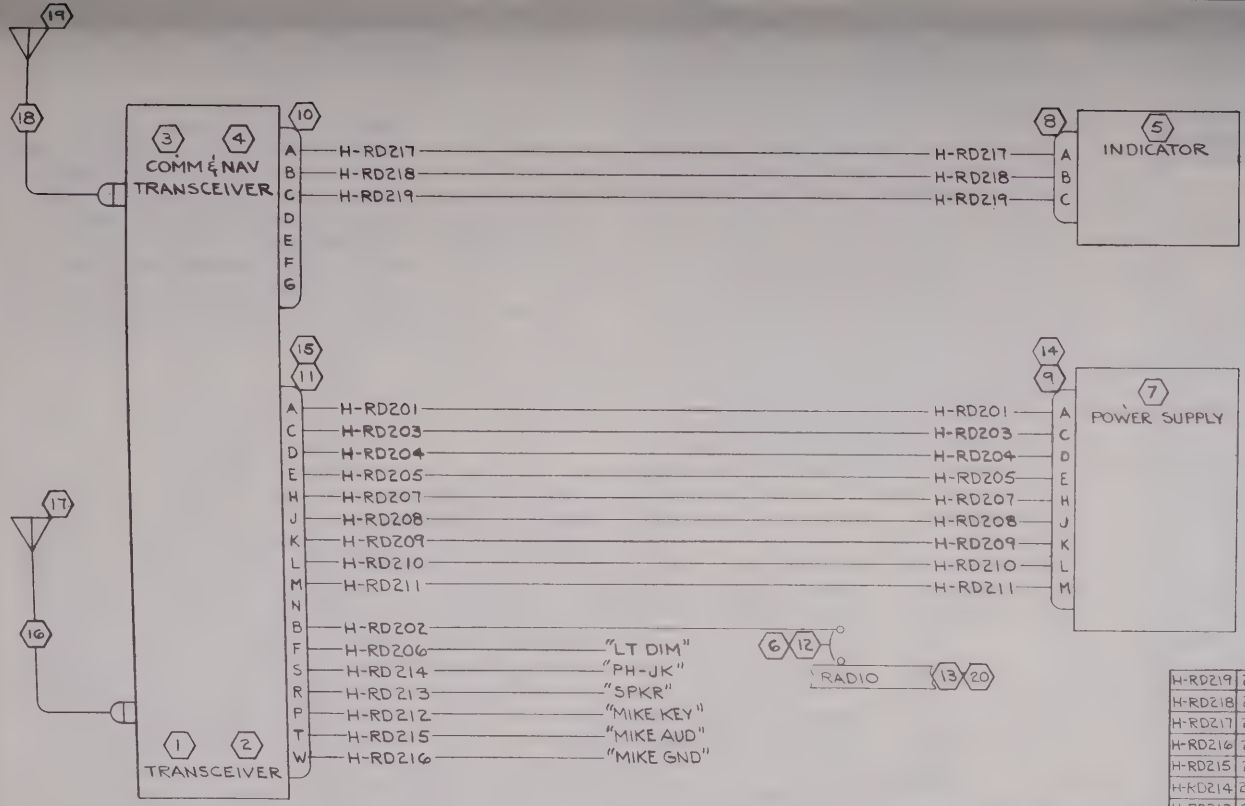


Inactive SER 205-0480 & ON
W. J. R. 5-14-63
RES TM Mc

| ITEM NO | PART NO. | DESCRIPTION | SERIALS |
|---|---|---|---|
| 20 | 1270461-1 | BUS BAR | (SR4038) & ON (SR3983) & ON |
| 19 | 1270420-9 | OMNI ANT. INSTL | |
| 18 | 0770033-63 | CABLE ASSY | |
| 17 | 1270420-4 | XMTR ANT. INSTL | |
| 16 | 0770033-56 | CABLE ASSY | |
| 15 | 092-0004-00 | HOOD (KG) | |
| 14 | 092-0003-00 | HOOD (KG) | |
| 13 | 1270429-1 | BUS BAR | THRU (SR4038) |
| 12 | S-1232-15 | CIRCUIT BREAKER | THRU (SR4038) |
| 11 | 030-2002-00 | RECEPTACLE (KG) | |
| 10 | 030-2013-00 | CONNECTOR (KG) | |
| 9 | 030-2000-00 | RECEPTACLE (KG) | |
| 8 | MS3106A10SL-3S | CONNECTOR (KG) | |
| 7 | KS-501(A) | POWER SUPPLY (KG) | |
| 6 | [illegible]-15 | [illegible] | (SR4038) & ON (SR3983) & ON |
| 5 | KI-200 | INDICATOR (KG) | |
| 4 | KX-120 | COMM & NAV XCVR (KG) | |
| 3 | KX-100 | COMM & NAV XCVR (KG) | |
| 2 | KY-95 | TRANSCEIVER (KG) | |
| 1 | KY-90 | TRANSCEIVER (KG) | |

EQUIPMENT TABLE

| WIRE CODE NO | GA | MATERIAL | LG | TERMINALS | | | SERIALS |
|---|---|---|---|---|---|---|---|
| H-RD219 | 22 | | | SOLDER | SOLDER | 1270637 | |
| H-RD218 | 22 | | | | SOLDER | | |
| H-RD217 | 22 | | | | SOLDER | | |
| H-RD216 | 22 | | | | 1 | | |
| H-RD215 | 22 | | | | | | |
| H-RD214 | 22 | | | | | | |
| H-RD213 | 22 | | | | | | |
| H-RD212 | 22 | | | | 1 | | |
| H-RD211 | 22 | | | | SOLDER | | |
| H-RD210 | 22 | | | | | | |
| H-RD209 | 22 | | | | | | |
| H-RD208 | 22 | | | | | | |
| H-RD207 | 22 | | | | SOLDER | | |
| H-RD206 | 18 | | | | 1 | | |
| H-RD205 | 16 | | | | SOLDER | | |
| H-RD204 | 22 | | | | SOLDER | | |
| H-RD203 | 16 | | | | SOLDER | | |
| H-RD202 | 16 | | | | S-1367-1-8 | | |
| H-RD201 | 22 | | | SOLDER | SOLDER | 1270637 | |

WIRE TABLE

NOTES:

1. WIRES H-RD206, 212, 213, 214, 215 & 216 TO BE CODED "LT DIM", "MIKE KEY", "SPKR", "PH-JK", "MIKE AUD" & "MIKE GND" RESPECTIVELY. NUMERICAL CODING PER CES 1100 IS OPTIONAL ON THESE WIRES
2. WIRES H-RD 203 & H-RD 205 TO BE TWISTED TOGETHER TO FORM A TWISTED PAIR.
3. WHEN THIS DIAGRAM IS USED IN CONJUNCTION WITH AN ISOLATION AMPLIFIER AND THE SPEAKER CIRCUIT IS NOT USED, H-RD213 IS TO BE CONNECTED TO GND THRU AN OHMITE 5 OHM, 5 WATT AXIAL LEAD RESISTOR OR EQUIVLENT.

CESSNA AIRCRAFT CO. COMMERCIAL AIRCRAFT DIVISION WICHITA KANSAS

| | NAME | DATE |
|---|---|---|
| DRAWN | RIDDER | 5/31/62 |
| GROUP | [illegible] | 6-5-62 |
| CHECK | R. Stuck | 6-6-62 |
| PROJ | [illegible] | 6-6-62 |

TITLE: WIRING DIAGRAM — KING KY-90, KY-95, KX100 & KX-120 (OPT)

Cessna.

DWG NO: 1270625

SUPERSEDED BY 1270625 PAGE 17.10.1 | SUPERSEDES | MODEL 205 & 206 | REV. A | PAGE: 17.10

FORM NO. 80-161

(SR4038-9)
(SR3983-9)

| CHG LET | REVISION | BY / DATE | CHK / APPD |
|---|---|---|---|
| A | BY REVISION: ADD DETAIL A, 030-2038-00 RECEPTACLE (KG) AND GRY/GRN & GRY/RED WIRES. ADD NOTE 3 (SR 4448) | GLW 11-1-63 | ERS TJA NMC |

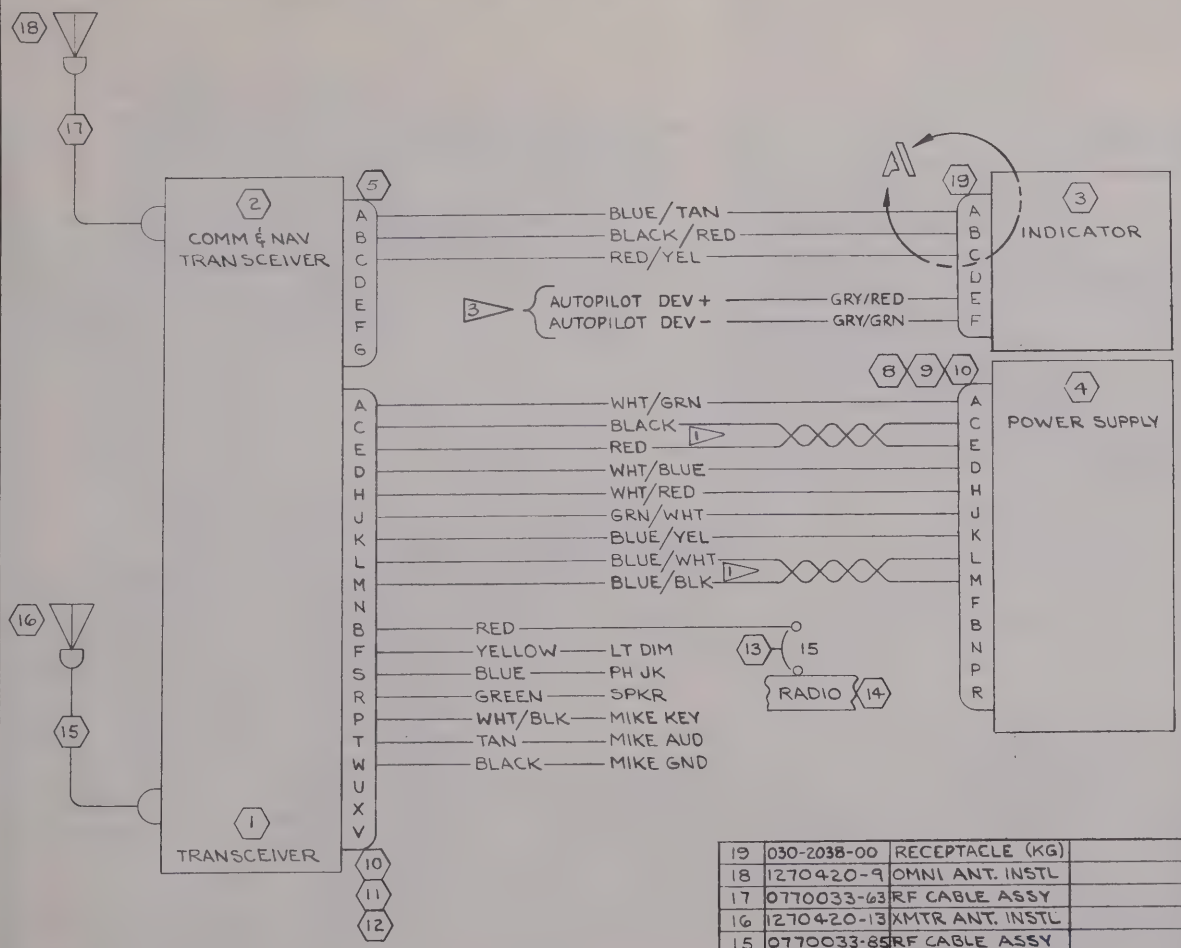


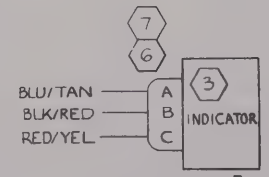


DETAIL A
APPLIES THRU (SR 4448)

NOTES:

1. WIRES FLAGGED THUS TO BE TWISTED TOGETHER TO FORM A TWISTED PAIR.
2. WHEN THIS DIAGRAM IS USED IN CONJUNCTION WITH AN ISOLATION AMPLIFIER AND THE SPEAKER CIRCUIT IS NOT USED, THE GREEN WIRE IS TO BE CONNECTED TO GND THRU AN OHMITE 5 OHM, 5 WATT AXIAL LEAD RESISTOR.
3. END OF WIRES TO BE COVERED WITH SLEEVING & TIED INTO CABLE UNTIL USED.

| ITEM NO | PART NO | DESCRIPTION | INSTALLED ON |
|---|---|---|---|
| 19 | 030-2038-00 | RECEPTACLE (KG) | |
| 18 | 1270420-9 | OMNI ANT. INSTL | |
| 17 | 0770033-63 | RF CABLE ASSY | |
| 16 | 1270420-13 | XMTR ANT. INSTL | |
| 15 | 0770033-85 | RF CABLE ASSY | |
| 14 | 1270461-1 | BUS BAR | |
| 13 | S-1360-15 | CIRCUIT BREAKER | |
| 12 | 030-1010-00 | HOOD (KG) | |
| 11 | 030-2002-00 | RECEPTACLE (KG) | |
| 10 | 030-1008-00 | LEVER & PIVOT ASSY (KG) | |
| 9 | 030-1009-00 | HOOD (KG) | |
| 8 | 030-2000-00 | RECEPTACLE (KG) | |
| 7 | 030-1003-00 | CLAMP (KG) | |
| 6 | 030-2017-00 | RECEPTACLE (KG) | |
| 5 | 030-2013-00 | CONNECTOR (KG) | |
| 4 | KS-501 (A) | POWER SUPPLY (KG) | |
| 3 | KI-200 | INDICATOR (KG) | |
| 2 | KX-120 | TRANSCEIVER (KG) | |
| 1 | KY-95 | TRANSCEIVER (KG) | |

EQUIPMENT TABLE

| WIRE CODE NO. | GA | MATERIAL | LG | TERMINALS | | N/A | SERIALS |
|---|---|---|---|---|---|---|---|
| GRY/RED | 22 | S-1460-22-8-2 | | SOLDER | | 1270464 | |
| GRY/GRN | 22 | S-1460-22-8-5 | | | | | |
| RED/YEL | 22 | S-1460-22-2-4 | | | SOLDER | | |
| BLK/RED | 22 | S-1460-22-0-2 | | | SOLDER | | |
| BLU/TAN | 22 | S-1460-22-6-10 | | | SOLDER | | |
| BLACK | 22 | S-1460-22-0 | | | | | |
| TAN | 22 | S-1460-22-10 | | | | | |
| WHT/BLK | 22 | S-1460-22-9-0 | | | | | |
| GREEN | 20 | S-1460-20-5 | | | | | |
| BLUE | 22 | S-1460-22-6 | | | | | |
| YELLOW | 18 | S-1460-18-4 | | | | | |
| RED | 16 | S-1460-16-2 | | | S-1367-1-6 | | |
| BLU/BLK | 22 | S-1460-22-6-0 | | | SOLDER | | |
| BLU/WHT | 22 | S-1460-22-6-9 | | | | | |
| BLU/YEL | 22 | S-1460-22-6-4 | | | | | |
| GRN/WHT | 20 | S-1460-20-5-9 | | | | | |
| WHT/RED | 22 | S-1460-22-9-2 | | | | | |
| WHT/BLU | 22 | S-1460-22-9-6 | | | | | |
| RED | 16 | S-1460-16-2 | | | | | |
| BLACK | 16 | S-1460-16-0 | | | | | |
| WHT/GRN | 22 | S-1460-22-9-5 | | SOLDER | SOLDER | 1270464 | |

WIRE TABLE

CESSNA AIRCRAFT CO. COMMERCIAL AIRCRAFT DIVISION, WICHITA, KANSAS

| | NAME | DATE |
|---|---|---|
| DRAWN | RIDDER | 5-15-63 |
| GROUP | | 6-5-63 |
| CHECK | | 5-31-63 |
| PROJ | | 6-6-63 |

TITLE: WIRING DIAGRAM — KING KY-95 & KX-120 (OPT)

Cessna.

DWG NO. 1270625

SUPERSEDED BY

SUPERSEDES

MODEL 205 & 206

REV A

PAGE 17-10-1

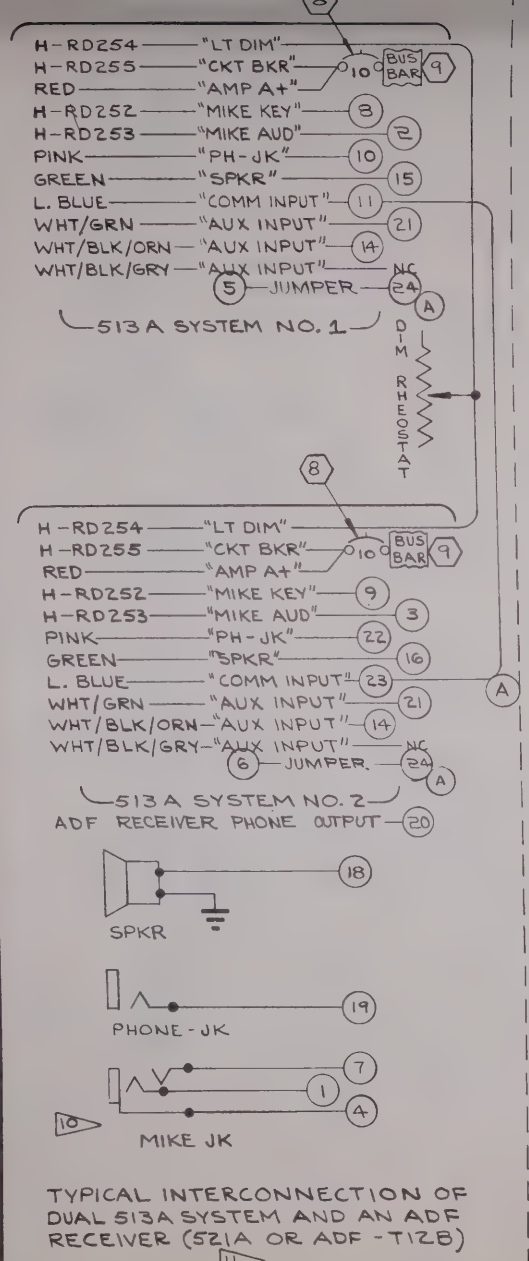


TYPICAL INTERCONNECTION OF DUAL 513A SYSTEM AND AN ADF RECEIVER (521A OR ADF-T12B)

NOTES: CONTINUED

7. "PH JK" WIRE IS CONNECTED TO "COMM-INPUT" CIRCUIT AND TO HEADSET JACK BY A SPKR-PHONE SWITCH WHEN AUDIO SWITCHING IS EMPLOYED. WHEN EXTERNAL AUDIO SWITCHING IS NOT REQD, CONNECT "PH JK" WIRE DIRECTLY TO HEADSET JACK AND JUMPER-WIRE PINS "J" & "EE" AT THE ACCESSORY UNIT.
8. TRANSMITTER SELECTOR SWITCH IS DESIGNED FOR USE WITH DUAL 513A SYSTEMS. AUDIO AMPLIFIER SYSTEMS ARE OPERATED "ALWAYS HOT" AS DESCRIBED IN NOTE 6. SPEAKER OUTPUTS FROM EACH SYSTEM DRIVE EITHER A 5 OHM, 5 WATT DUMMY LOAD OR THE SHIP'S SPEAKER AS DETERMINED BY THE TRANSMITTER SELECTED. (REF 1270625 PAGE 17.12)
9. WHEN AN OPTIONAL NAV-O-MATIC AUTOPILOT WITH OMNI COUPLER IS COMBINED WITH A 513A SYSTEM, ADD (2) 22 GA. WIRES AS SHOWN TO PINS "K" AND "P". WIRES TO BE 24 INCH LONG & LABLED "DEV+" & "DEV-" AS SHOWN.
10. MIKE JACK IS SNDED AT TRANS SELECTOR SWITCH ON DUAL INSTL SO MUTING RELAY WILL FUNCTION ONLY WHEN TRANS SEL. SWITCH IS CORRECTLY POSITIONED. I.E. WHEN TRANS #2 IS SELECTED & THERE IS NO 2ND TRANS INSTALLED, AUDIO MUTING WILL NOT OCCUR.
11. CIRCLED NUMBERS "◯" REFER TO TERMINALS ON TRANS-AUDIO SEL SWITCH ASSY (REF 1270625, PAGE 17.12)
12. WHEN THE AMPLIFIER IN THIS SYSTEM IS USED AS AN ISOLATION AMPLIFIER IN COMBINATION WITH OTHER RADIO EQUIPMENT, CONNECT THE AMPLIFIER A+ POWER LEAD TO A SEPARATE CIRCUIT BREAKER (S-1360-5) LABLED AUD AMP. WHEN DUAL 513 RADIOS ARE INSTALLED, NO. 2 AMPLIFIER POWER LEAD TO BE SAME BREAKER AS NO. 2 SET.

| ITEM NO | PART NO. | DESCRIPTION | INSTALLED ON |
|---|---|---|---|

EQUIPMENT TABLE

| REV | DESCRIPTION | BY | DATE |
|---|---|---|---|
| A | BY REV: ADDED JUMPER BETWEEN (1) & (4) REVISED NOTE 10, ADDED JUMPER WIRES | H L W | 10-9-62 |
| B | TITLE WAS ARC TYPE 513A VNF NAV-COM RADIO SYSTEM (OPT) | RGB | 12-4-63 |

Inactive SER 205-0481 & ON 8-5-63 RRS

| WIRE CODE NO | GA | MATERIAL | LG | TERMINALS | N/A | SERIALS |
|---|---|---|---|---|---|---|
| H-RD284 | 22 | | | SOLDER | SOLDER 1270639 | |
| H-RD283 | 22 | | | | | |
| H-RD282 | 22S | | | | | 5 |
| H-RD281 | 22S | | | | | |
| H-RD280 | 22 | | | | | |
| H-RD279 | 22 | | | | | |
| H-RD278 | 22 | | | | | |
| H-RD277 | 22 | | | | | |
| H-RD276 | 22 | | | | | |
| H-RD275 | 16 | | | | | |
| H-RD274 | 22 | | | | | |
| H-RD273 | 22 | | | | | |
| H-RD272 | 18 | | | | | |
| H-RD271 | 22 | | | | | |
| H-RD270 | 22 | | | | | |
| H-RD269 | 22 | | | | | |
| H-RD268 | 22S | | | | | |
| H-RD267 | 22 | | | | | |
| H-RD266 | 22 | | | | | |
| H-RD265 | 20 | | | | | |
| H-RD264 | 22 | | | | | |
| H-RD263 | 16 | | | | | |
| H-RD262 | 22 | | | | | |
| H-RD261 | 22S | | | | | |
| H-RD260 | 22S | | | | | |
| H-RD259 | 22S | | | | | |
| H-RD258 | 22S | | | | | |
| H-RD257 | 22S | | | | | |
| H-RD256 | 22S | | | | | 5 |
| H-RD255 | 18 | | | | | |
| H-RD254 | 20 | | | | | |
| H-RD253 | 22S | | | | | |
| H-RD252 | 22 | | | SOLDER | | |
| H-RD251 | 16 | | | SOLDER | S-1367-2-8 1270639 | |

WIRE TABLE

CESSNA AIRCRAFT CO. COMMERCIAL AIRCRAFT DIVISION, WICHITA, KANSAS

| | NAME | DATE |
|---|---|---|
| DRAWN | H WISE | 7-10-62 |
| GROUP | C Martin | 7-13-62 |
| CHECK | R Stuck | 7-13-62 |
| PROJ | W McCarter | 7-17-62 |

TITLE: WIRING DIAGRAM — CESSNA NAV-COM 300 (ARC TYPE 513A) (OPT)

Cessna.

DWG NO. 1270625

| SUPERSEDED BY | SUPERSEDES | MODEL | REV: | PAGE: |
|---|---|---|---|---|
| | | 205 | B | 17.11 |

FORM NO. 80-161

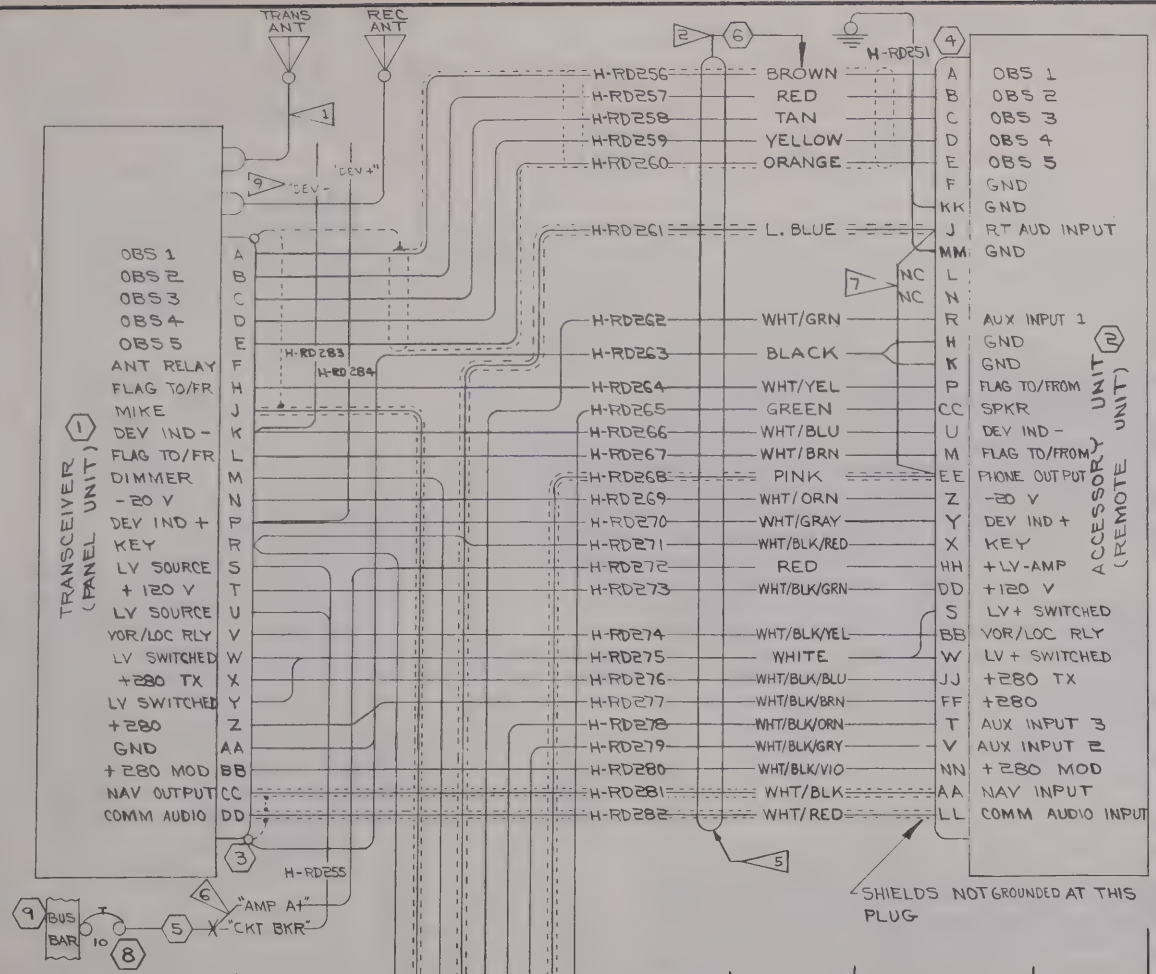


| | PART NO. | DESCRIPTION | INSTALLED ON |
|---|---|---|---|
| 9 | 1270429-1 | BUS BAR | |
| 8 | S-1232-10 | CIRCUIT BREAKER | |
| 7 | | | |
| 6 | NO.161548 | CABLE MATL(FLAG | |
| 5 | 1270625-RD101 | WIRE | |
| 4 | MRE39S-G-H/VL | CONNECTOR ASSY(WIQ) | |
| 3 | XMRE26S-G-1B017 | CONNECTOR ASSY(WIQ) | |
| 2 | RTA-503A | ACCESSORY UNIT | |
| 1 | RT-513A | TRANSCEIVER | |

(SR3901)

| CHG LET | REVISION | BY / DATE | CHK / APPD |
|---|---|---|---|
| A | TITLE WAS ARE TYPE 513A VHF NAV-COM RADIO SYSTEM (OPT) | RGB 12-9-68 | RRS TMC |

Mar Turi E ON SER 205-0481 8-5-63 ; ASEC NMC

NOTES:

1. TRANSMITTING & RECEIVING ANTENNA LEAD-IN CABLES ARE ATTACHED TO DUST COVER CONNECTORS ON INST L IN AIRPLANE.
2. (6) CABLE MATERIAL IS A SPECIAL 27 CONDUCTOR COLOR CODED CABLE WITH CONDUCTOR GAUGE & SHIELDS AS INDICATED IN B/M FOR INDIVIDUAL WIRES EXCEPT (5) WIRES BETWEEN PINS "A" TO "E" ARE ENCLOSED IN A COMMON SHIELD.
3. WIRES NO. H-RD251 THRU H-RD255 ARE INDIVIDUAL WIRES AND THEY ARE APPLICABLE TO ALL HARNESS ASSYS.
4. WIRES NO. H-RD252 THRU H-RD255 TO BE CODED "MIKE KEY", "MIKE AUD", "LT DIM", & "CKT BKR" RESPECTIVELY. NUMERICAL CODING PER CES 1100 IS OPTIONAL ON THESE WIRES.
5. NUMBERS ARE ASSIGNED TO THESE WIRES TO ALLOW FABRICATION & IDENTIFICATION OF THE HARNESS ASSY USING INDIVIDUAL WIRES WHEN COLOR CODED MULTI-CONDUCTOR CABLE MATERIAL IS NOT USED.
6. WIRE NO H-RD272 IS CONNECTED TO CKT BKR AS SHOWN WHEN AUDIO MODULATION PORTION OF RTA-513A IS UTILIZED AS AN "ALWAYS HOT" AUDIO ISOLATION AMPLIFIER FOR OTHER EQUIPMENT. CONNECT H-RD272 TO PIN W & Y WHEN THE AMPLIFIER IS TO BE ENERGIZED BY THE 513A POWER SWITCH.

(SEE PAGE 17.11 FOR NOTE 7 & HIGHER)

SEE PAGE 17.11 FOR WIRE TABLE

| WIRE CODE NO. | GA | MATERIAL | LG | TERMINALS | SERIALS |
|---|---|---|---|---|---|

WIRE TABLE

CESSNA AIRCRAFT CO. COMMERCIAL AIRCRAFT DIVISION, WICHITA, KANSAS

| | NAME | DATE |
|---|---|---|
| DRAWN | H WISE | 7-10-62 |
| GROUP | L Martin | 7-13-62 |
| CHECK | R Stuck | 7-13-62 |
| PROJ | H. McCarter | 7-17-62 |

TITLE: WIRING DIAGRAM — CESSNA NAV-COM 300 (ARC TYPE 513A) (OPT)

Cessna.

DWG NO 1270625

REV 1 PAGE 17.10

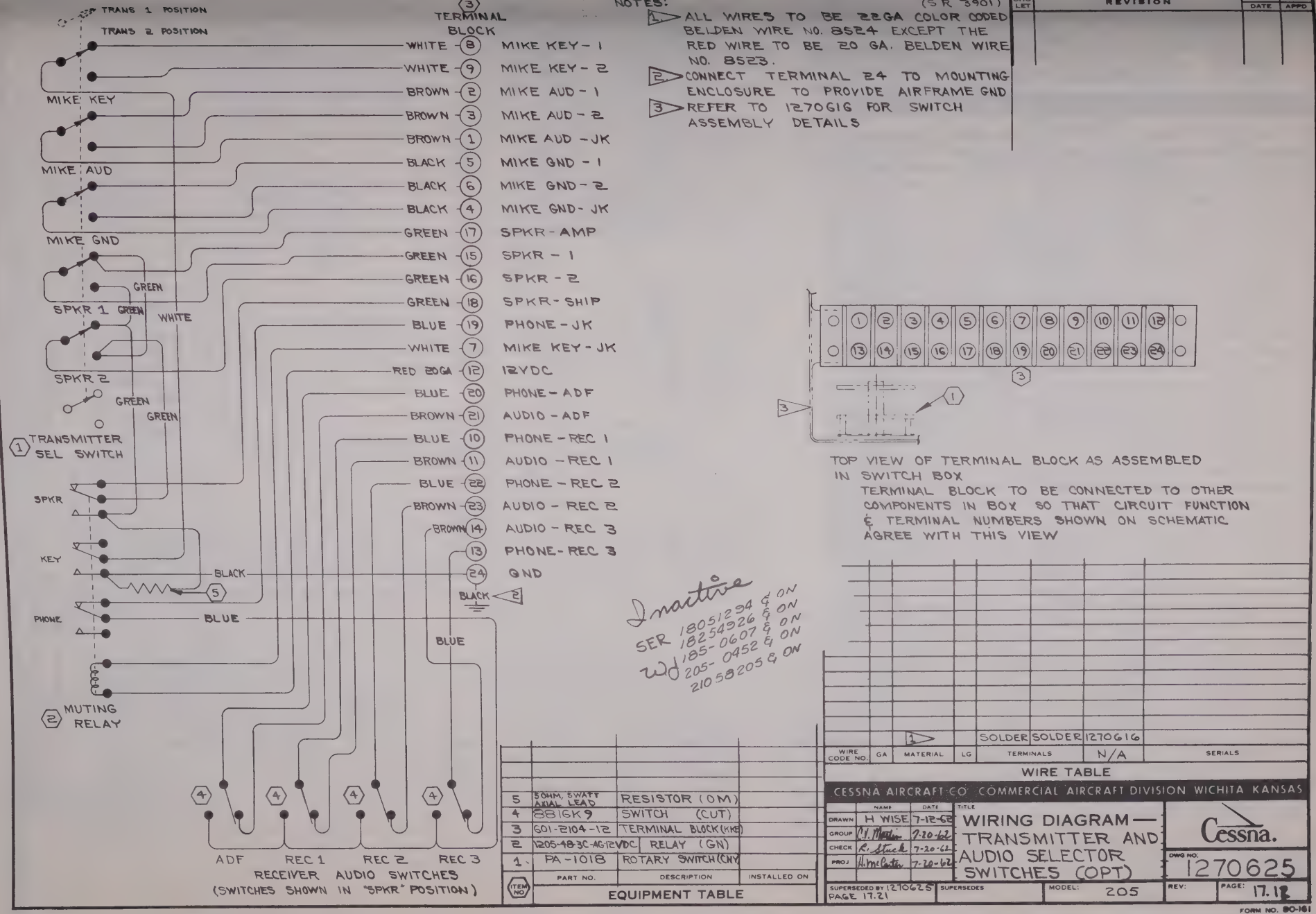


NOTES: (SR 3901)

1. ALL WIRES TO BE 22GA COLOR CODED BELDEN WIRE NO. 8524 EXCEPT THE RED WIRE TO BE 20 GA. BELDEN WIRE NO. 8523.
2. CONNECT TERMINAL 24 TO MOUNTING ENCLOSURE TO PROVIDE AIRFRAME GND
3. REFER TO 1270G1G FOR SWITCH ASSEMBLY DETAILS

| LET | REVISION | DATE | APPD |
|---|---|---|---|




TOP VIEW OF TERMINAL BLOCK AS ASSEMBLED IN SWITCH BOX
TERMINAL BLOCK TO BE CONNECTED TO OTHER COMPONENTS IN BOX SO THAT CIRCUIT FUNCTION & TERMINAL NUMBERS SHOWN ON SCHEMATIC AGREE WITH THIS VIEW

Inactive
SER 18051294 & ON
18254926 & ON
WJ 185-0607 & ON
205-0452 & ON
21058205 & ON

| WIRE CODE NO. | GA | MATERIAL | LG | TERMINALS | N/A | SERIALS |
|---|---|---|---|---|---|---|
| | | 1 | | SOLDER | SOLDER | 1270616 |

WIRE TABLE

| | | | |
|---|---|---|---|
| 5 | 50HM, 5WATT AXIAL LEAD | RESISTOR (OM) | |
| 4 | 8816K9 | SWITCH (CUT) | |
| 3 | 601-2104-12 | TERMINAL BLOCK (KKE) | |
| 2 | 1205-48-3C-AG12VDC | RELAY (GN) | |
| 1 | PA-1018 | ROTARY SWITCH (CNY) | |
| ITEM NO | PART NO. | DESCRIPTION | INSTALLED ON |

EQUIPMENT TABLE

CESSNA AIRCRAFT CO COMMERCIAL AIRCRAFT DIVISION WICHITA KANSAS

| | NAME | DATE |
|---|---|---|
| DRAWN | H WISE | 7-12-62 |
| GROUP | M. Martin | 7-20-62 |
| CHECK | R. Stuck | 7-20-62 |
| PROJ | H. McCarter | 7-20-62 |

TITLE: WIRING DIAGRAM — TRANSMITTER AND AUDIO SELECTOR SWITCHES (OPT)

Cessna.

DWG NO: 1270625

| SUPERSEDED BY 1270625 PAGE 17.21 | SUPERSEDES | MODEL: 205 | REV: | PAGE: 17.18 |
|---|---|---|---|---|

FORM NO. 80-161

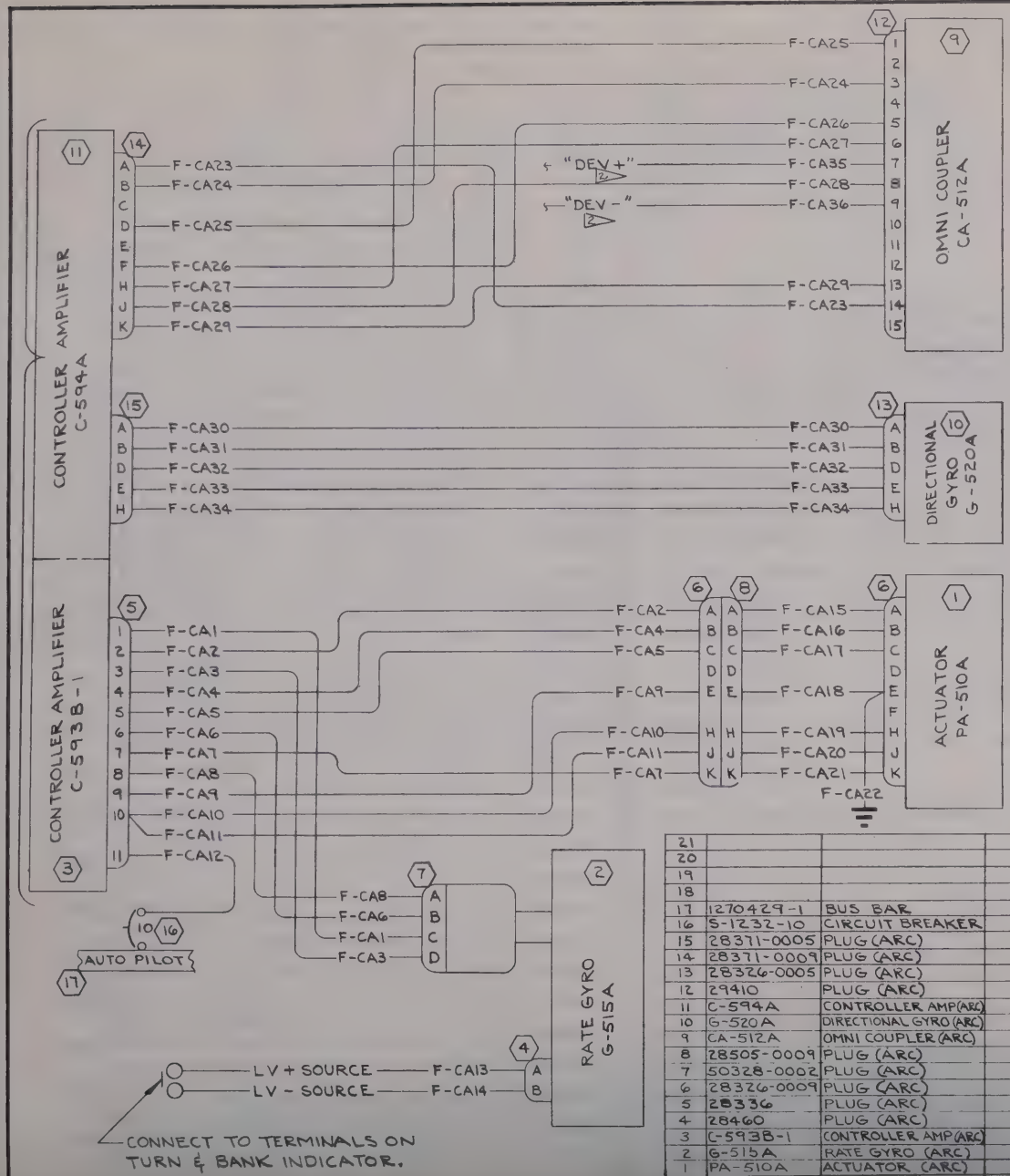


NOTES:

1. "F" PREFIX USED ON THIS DRAWING INSTEAD OF "H" BECAUSE CABLE ASSYS ARE SAME AS THOSE USED IN MODEL 210. THIS DIAGRAM IS SCHEMATICALLY IDENTICAL TO 1270405 PAGE 17.7 WIRING DIAGRAM AND IS FOR REF ONLY.
2. "DEV +" AND "DEV -" TO BE STAMPED ON THESE WIRES AS SHOWN. NUMERICAL CODE IS OPTIONAL.

| CHG LET | REVISION | BY / DATE | CHK / APPD |
|---|---|---|---|
| A | IN E/T: G-515A RATE GYRO WAS G-520A; G-520A DIRECTIONAL GYRO WAS G-516A & REMOVE JUMPERS FROM 29410 PLUG (REG) | WJR 8-29-62 | RRS |

INACTIVE
SERIAL (S R 4240) & ON
NRW 5-6-63
RRS JM NMC

| WIRE CODE NO. | GA | MATERIAL | LG | TERMINALS | | N/A | SERIALS |
|---|---|---|---|---|---|---|---|
| F-CA36 | 22 | | | SOLDER | SOLDER | 1270449 | |
| F-CA35 | 22 | | | | | | |
| F-CA34 | 22 | | | | | | |
| F-CA33 | 22 | | | | | | |
| F-CA32 | 22 | | | | | | |
| F-CA31 | 22 | | | | | | |
| F-CA30 | 22 | | | | | | |
| F-CA29 | 20 | | | | | | |
| F-CA28 | 22 | | | | | | |
| F-CA27 | 22 | | | | | | |
| F-CA26 | 22 | | | | | | |
| F-CA25 | 22 | | | | | | |
| F-CA24 | 20 | | | | | | |
| F-CA23 | 20 | | | | | | |
| F-CA22 | 22 | | | | | | |
| F-CA21 | 22 | | | | | | |
| F-CA20 | 20 | | | | | | |
| F-CA19 | 20 | | | | | | |
| F-CA18 | 22 | | | | | | |
| F-CA17 | 22 | | | | | | |
| F-CA16 | 22 | | | | | | |
| F-CA15 | 22 | | | SOLDER | | | |
| F-CA14 | 18 | | | S-1367-1-8 | | | |
| F-CA13 | 18 | | | S-1367-1-8 | | | |
| F-CA12 | 16 | | | SOLDER | | | |
| F-CA11 | 20 | | | | | | |
| F-CA10 | 20 | | | | | | |
| F-CA9 | 22 | | | | | | |
| F-CA8 | 22 | | | | | | |
| F-CA7 | 22 | | | | | | |
| F-CA6 | 22 | | | | | | |
| F-CA5 | 22 | | | | | | |
| F-CA4 | 22 | | | | | | |
| F-CA3 | 22 | | | | | | |
| F-CA2 | 22 | | | | | | |
| F-CA1 | 22 | | | SOLDER | SOLDER | 1270449 | |

WIRE TABLE

| ITEM | PART NO. | DESCRIPTION | INSTALLED ON |
|---|---|---|---|
| 21 | | | |
| 20 | | | |
| 19 | | | |
| 18 | | | |
| 17 | 1270429-1 | BUS BAR | |
| 16 | S-1232-10 | CIRCUIT BREAKER | |
| 15 | 28371-0005 | PLUG (ARC) | |
| 14 | 28371-0009 | PLUG (ARC) | |
| 13 | 28326-0005 | PLUG (ARC) | |
| 12 | 29410 | PLUG (ARC) | |
| 11 | C-594A | CONTROLLER AMP (ARC) | |
| 10 | G-520A | DIRECTIONAL GYRO (ARC) | |
| 9 | CA-512A | OMNI COUPLER (ARC) | |
| 8 | 28505-0009 | PLUG (ARC) | |
| 7 | 50328-0002 | PLUG (ARC) | |
| 6 | 28326-0009 | PLUG (ARC) | |
| 5 | 28336 | PLUG (ARC) | |
| 4 | 28460 | PLUG (ARC) | |
| 3 | C-593B-1 | CONTROLLER AMP (ARC) | |
| 2 | G-515A | RATE GYRO (ARC) | |
| 1 | PA-510A | ACTUATOR (ARC) | |

CESSNA AIRCRAFT CO. COMMERCIAL AIRCRAFT DIVISION, WICHITA, KANSAS

| | NAME | DATE |
|---|---|---|
| DRAWN | RIDDER | 8-6-62 |
| GROUP | C.V. Martin | 8-10-62 |
| CHECK | R. Stuck | 8-10-62 |
| PROJ | N. McCarter | 8-10-62 |

TITLE: WIRING DIAGRAM — NAV-O-MATIC 200 & 300 SYSTEMS (OPT)

Cessna.

DWG NO. 1270625

SUPERSEDED BY | SUPERSEDES | MODEL: | REV A | PAGE: 17.13

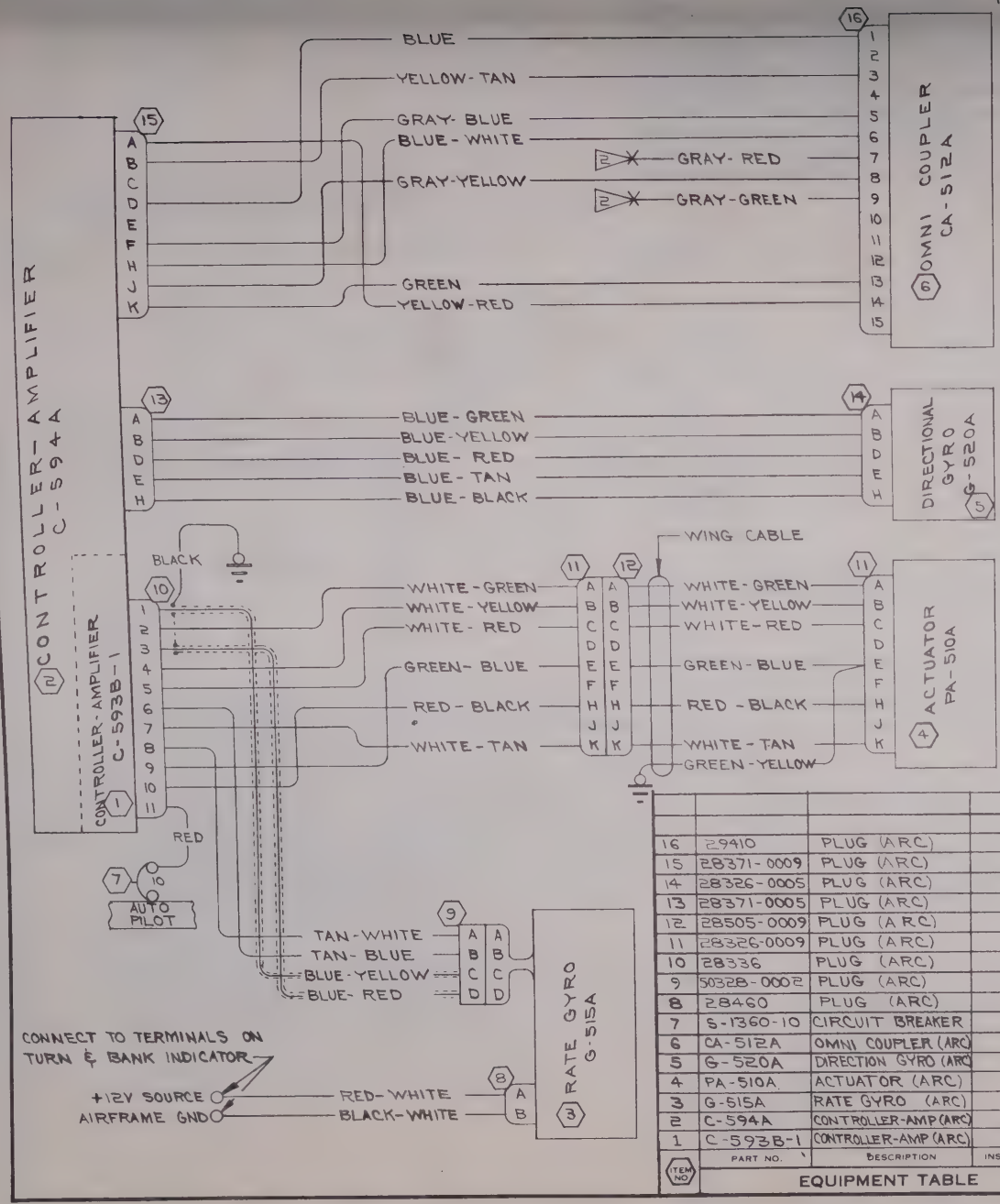


NOTES:

1. WHERE WIRE CODE LISTS 2 COLORS, 1ST COLOR IS BASE COLOR & 2ND COLOR IS THE STRIPE.
2. GRAY-RED WIRE IS "DEV+" CIRCUIT & GRAY-GREEN WIRE IS "DEV-" CIRCUIT FOR CONNECTION TO A VOR INDICATOR.
3. NAV-O-MATIC 300 SYSTEM INCLUDES ALL ITEMS EXCEPT (1), 200 SYSTEM INCLUDES (1) (3) (4) (7) & ASSOCIATED PLUGS & WIRES
4. THIS DRAWING IS SCHEMATICALLY IDENTICAL TO 1270405, PAGE 17.7.1 AND IS FOR REF ONLY. CABLE ASSYS TO BE FABRICATED PER 1270405, PAGE 17.7.1

| CHG LET | REVISION (SR4240) | DATE | APPD |
|---|---|---|---|

| WIRE CODE NO. | GA | MATERIAL | LG | TERMINALS | | NEXT ASSEMBLY | SERIALS |
|---|---|---|---|---|---|---|---|
| BLACK | 16 | S-1460-16-0 | | SOLDER | S-1367-2-8 | 1270449 | |
| YELLOW/RED | 20 | S-1460-20-4-2 | | | SOLDER | | |
| GREEN | 20 | S-1460-20-5 | | | SOLDER | | |
| GRAY/GREEN | 22 | S-1460-22-8-5 | | | S-1370-0 | | |
| GRAY/RED | 22 | S-1460-22-8-2 | | | S-1370-0 | | |
| GRAY/YELLOW | 22 | S-1460-22-8-4 | | | SOLDER | | |
| BLUE/WHITE | 22 | S-1460-22-6-9 | | | | | |
| GRAY/BLUE | 22 | S-1460-22-8-6 | | | | | |
| YELLOW/TAN | 20 | S-1460-20-4-10 | | | | | |
| BLUE | 22 | S-1460-22-6 | | | | | |
| BLUE/BLACK | 22 | S-1460-22-6-0 | | | | | |
| BLUE/TAN | 22 | S-1460-22-6-10 | | | | | |
| BLUE/RED | 22 | S-1460-22-6-2 | | | | | |
| BLUE/YELLOW | 22 | S-1460-22-6-4 | | | | | |
| BLUE/GREEN | 22 | S-1460-22-6-5 | | | | | |
| WHITE/GREEN | 22 | S-1460-22-9-5 | | | | | |
| WHITE/YELLOW | 22 | S-1460-22-9-4 | | | | | |
| WHITE/RED | 22 | S-1460-22-9-2 | | | | | |
| GREEN/BLUE | 20 | S-1460-20-5-6 | | | | | |
| RED/BLACK | 18 | S-1460-18-2-0 | | | SOLDER | | |
| WHITE/TAN | 22 | S-1460-22-9-10 | | | S-1367-1-8 | | |
| GREEN/YELLOW | 20 | S-1460-20-5-4 | | | S-1367-1-8 | | |
| BLACK/WHITE | 18 | S-1460-18-0-9 | | | S-1367-1-8 | | |
| RED/WHITE | 18 | S-1460-18-2-9 | | | S-1367-2-8 | | |
| RED | 16 | S-1460-16-2 | | | SOLDER | | |
| RED/BLACK | 18 | S-1460-18-2-0 | | | | | |
| GREEN/BLUE | 20 | S-1460-20-5-6 | | | | | |
| TAN/WHITE | 22 | S-1460-22-10-9 | | | | | |
| WHITE/TAN | 22 | S-1460-22-9-10 | | | | | |
| TAN/BLUE | 22 | S-1460-22-10-6 | | | | | |
| WHITE/RED | 22 | S-1460-22-9-2 | | | | | |
| WHITE/YELLOW | 22 | S-1460-22-9-4 | | | | | |
| BLUE/RED | 22 | S-1461-22-6-2 | | | | | |
| WHITE/GREEN | 22 | S-1460-22-9-5 | | | | | |
| BLUE/YELLOW | 22 | S-1461-22-6-4 | | SOLDER | SOLDER | 1270449 | |

WIRE TABLE

| ITEM NO | PART NO. | DESCRIPTION | INSTALLED ON |
|---|---|---|---|
| 16 | 2-9410 | PLUG (ARC) | |
| 15 | 28371-0009 | PLUG (ARC) | |
| 14 | 28326-0005 | PLUG (ARC) | |
| 13 | 28371-0005 | PLUG (ARC) | |
| 12 | 28505-0009 | PLUG (ARC) | |
| 11 | 28326-0009 | PLUG (ARC) | |
| 10 | 28336 | PLUG (ARC) | |
| 9 | 50328-0002 | PLUG (ARC) | |
| 8 | 28460 | PLUG (ARC) | |
| 7 | S-1360-10 | CIRCUIT BREAKER | |
| 6 | CA-512A | OMNI COUPLER (ARC) | |
| 5 | G-520A | DIRECTION GYRO (ARC) | |
| 4 | PA-510A | ACTUATOR (ARC) | |
| 3 | G-515A | RATE GYRO (ARC) | |
| 2 | C-594A | CONTROLLER-AMP (ARC) | |
| 1 | C-593B-1 | CONTROLLER-AMP (ARC) | |

EQUIPMENT TABLE

CESSNA AIRCRAFT CO. COMMERCIAL AIRCRAFT DIVISION WICHITA KANSAS

| | NAME | DATE |
|---|---|---|
| DRAWN | H. WISE | 5-3-63 |
| GROUP | [illegible] | 5-16-63 |
| CHECK | K. Stuck | 5-16-63 |
| PROJ | N. McFarlin | 5-23-63 |

TITLE: WIRING DIAGRAM — NAV-O-MATIC 200 & 300 SYSTEMS (OPT)

Cessna.

DWG NO. 1270625

SUPERSEDED BY:

SUPERSEDES 1270625, PAGE 17.13

MODEL: 205 - 206

REV:

PAGE: 17.13.1

FORM NO. 80-161

(SR 3900 )

| CHG LET | REVISION | BY / DATE | CHK / APPD |
|---|---|---|---|
| A | BY REVISION: ADD JUMPERS TO PINS 16, 19, 17 & 18. TITLE WAS "ARC TYPE 521A ADF" 1270641-1 BUS BAR WAS 1270429-1 ADD MODEL 206 S-1360-5 CKT BKR WAS S-1232-5 28340-1000 WAS R-521A 28360 WAS L-521A 50310 WAS IN-501A (SR 4038-9)(SR 3983-9) | GLW 8-3-63 | RRS |

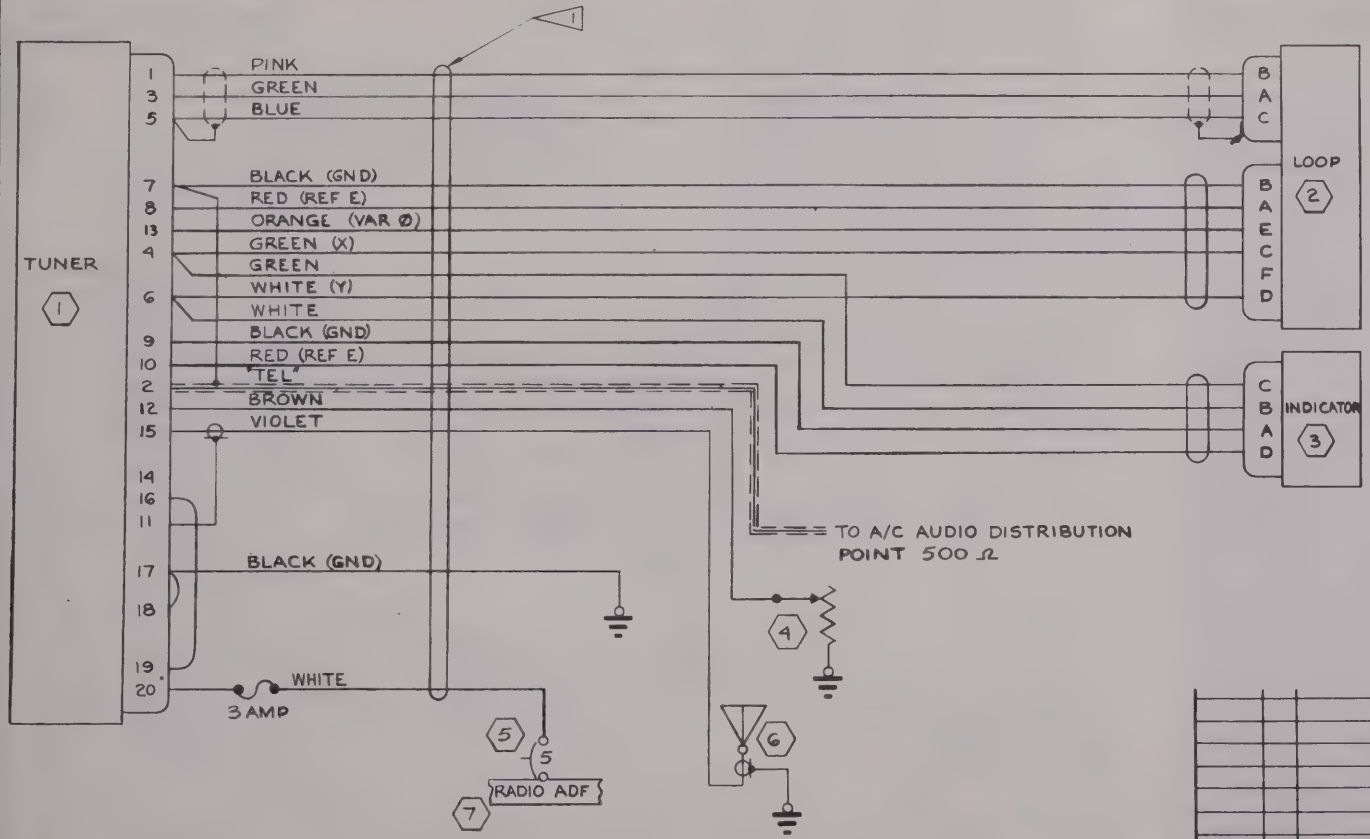


NOTES:

1. ALL WIRES ARE PART OF 28340-1000 TUNER. (REF 1270614)
2. CONNECTIONS SHOWN ARE FOR TOP MOUNTED LOOP & SENSE ANTENNAS.

| ITEM | PART NO. | DESCRIPTION | INSTALLED ON |
|---|---|---|---|
| 7 | 1270461-1 | BUS BAR | |
| 6 | 1270420-2 | LF ANTENNA | |
| 5 | S-1360-5 | CIRCUIT BREAKER | |
| 4 | R-12½-75-RS34 | RHEOSTAT (TRTA) | |
| 3 | 50310 | INDICATOR | |
| 2 | 28360 | LOOP | |
| 1 | 28340-1000 | TUNER | |

| WIRE CODE NO. | GA | MATERIAL | LG | TERMINALS | | SERIALS |
|---|---|---|---|---|---|---|

WIRE TABLE

CESSNA AIRCRAFT CO. COMMERCIAL AIRCRAFT DIVISION WICHITA KANSAS

| | NAME | DATE |
|---|---|---|
| DRAWN | G WOOD | 7-16-62 |
| GROUP | [illegible] | 8-10-62 |
| CHECK | R. Stuck | 8-10-62 |
| PROJ | H. McCarter | 8-10-62 |

TITLE: WIRING DIAGRAM — CESSNA ADF 300 (OPT) (ARC) TYPE 521A

Cessna.

DWG NO. 1270625

SUPERSEDED BY | SUPERSEDES | MODEL | REV A | PAGE 17-14

(SR 3969)

| LET | REVISION | DATE | APPD |
|---|---|---|---|
| | | | |

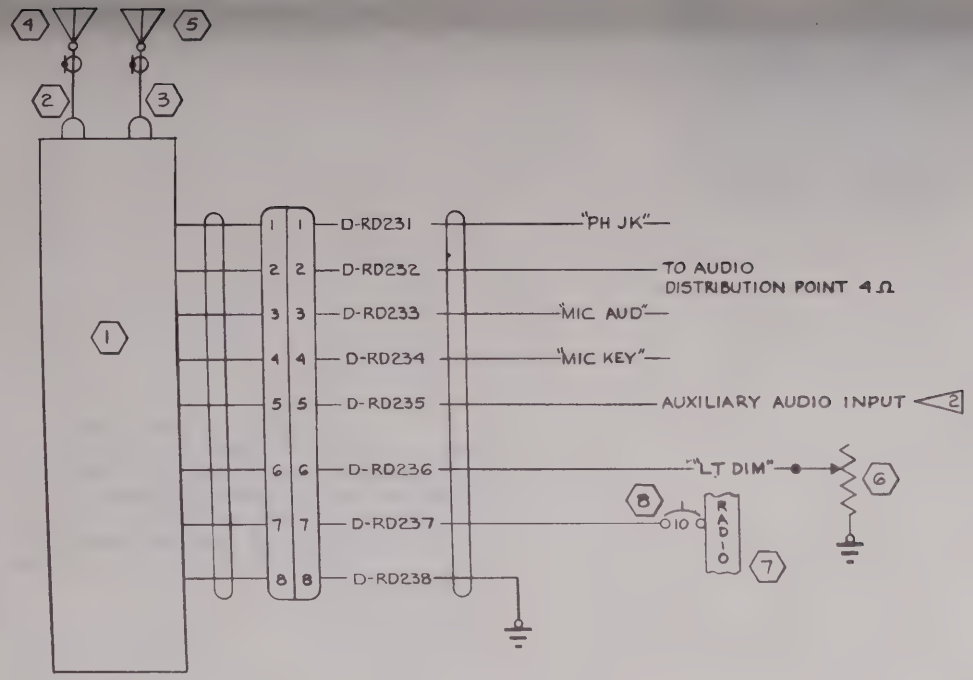


Inactive
SER 205-0480 & ON
8-16-63
RRS

NOTES:

1. D-RD231, D-RD233, D-RD234 & D-RD236 WIRES TO BE CODED "PH-JK", "MIKE AUD" "MIKE KEY" & "LT DIM" RESPECTIVELY. NUMERICAL CODING PER CES 1100 IS OPTIONAL ON THESE WIRES.
2. END OF WIRE TO BE COVERED WITH SLEEVING AND TIED INTO CABLE UNTIL USED.
3. "D" PREFIX USED ON THIS DRAWING INSTEAD OF "H" BECAUSE CABLE ASSYS ARE SAME AS THOSE USED IN MODEL 182. THIS DIAGRAM IS SCHEMATICALLY IDENTICAL TO 0770610 PAGE 17.8 WIRING DIAGRAM AND IS FOR REF ONLY.

| WIRE CODE NO. | GA | MATERIAL | LG | TERMINALS | | | SERIALS |
|---|---|---|---|---|---|---|---|
| D-RD238 | 16 | | | S-1367-28 | SOLDER | | |
| D-RD237 | 16 | | | S-1367-28 | | | |
| D-RD236 | 22 | | | SOLDER | | 1 | |
| D-RD235 | 22 | | | | | | |
| D-RD234 | 22 | | | SOLDER | | 1 | |
| D-RD233 | 22 | | | SOLDER | | 1 | |
| D-RD232 | 22 | | | | | | |
| D-RD231 | 22 | | | SOLDER | SOLDER | 1 | |

WIRE TABLE

| ITEM NO | PART NO. | DESCRIPTION | INSTALLED ON |
|---|---|---|---|
| 8 | S-1232-10 | CIRCUIT BREAKER | |
| 7 | 1270429-1 | BUS BAR | |
| 6 | R-12[illegible]-75-RS34 | RHEOSTAT (TRTA) | |
| 5 | 1270420-4 | VHF ANT. INSTL | |
| 4 | 1270420-9 | OMNI ANT. INSTL | |
| 3 | 0770033-95 | CABLE ASSY | |
| 2 | 0770033-97 | CABLE ASSY | |
| 1 | KX-150 | DIRECTOR (KG) | |

EQUIPMENT TABLE

CESSNA AIRCRAFT COMPANY — COMMERCIAL AIRCRAFT DIVISION WICHITA KANSAS

| | NAME | DATE |
|---|---|---|
| DRAWN | G WOOD | 8-17-62 |
| GROUP | [illegible] | 9-5-62 |
| CHECK | R. Stuck | 9-6-62 |
| PROJ | W. McCarty | 9-7-62 |

TITLE: WIRING DIAGRAM — KING KX-150 (OPT)

Cessna.

DWG NO: 1270625

| SUPERSEDED BY | SUPERSEDES | MODEL: | REV: | PAGE: |
|---|---|---|---|---|
| 1270625 PAGE 17.15.1 | | 205 | | 17.15 |

FORM NO. 80-161

(SR4038-9) (SR3983-9)

| CHG LET | REVISION | BY DATE | CHK APPD |
|---|---|---|---|
| | | | |

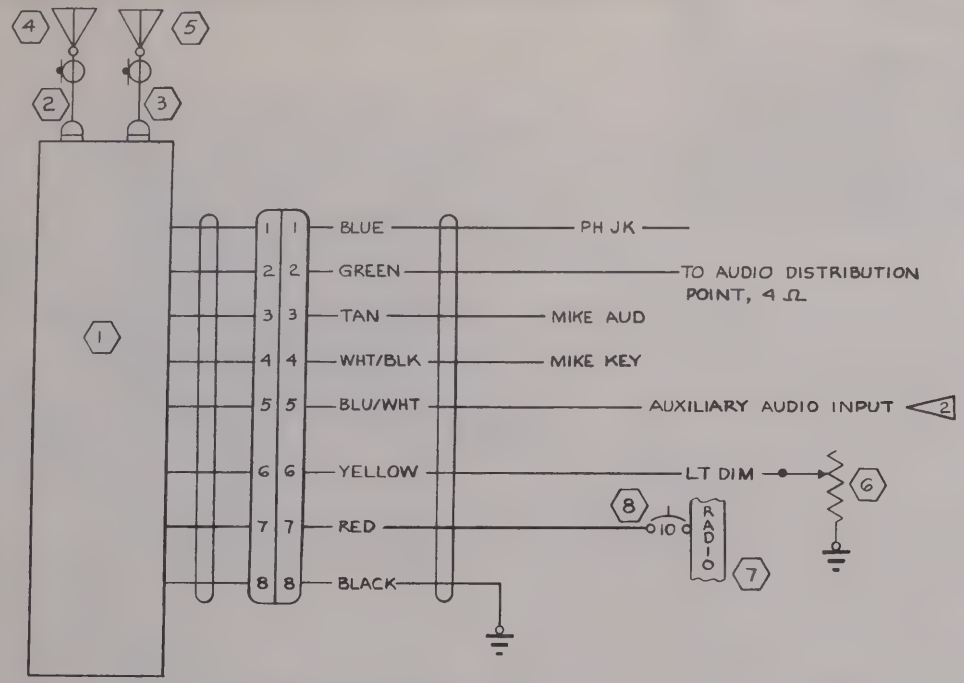


Inactive (SER 9917) & ON 11-21-63

NOTES:

1. THIS DIAGRAM IS SCHEMATICALLY IDENTICAL TO 0770610 PAGE 17.8.1 WIRING DIAGRAM AND IS FOR REF ONLY.
2. END OF WIRE TO BE COVERED WITH SLEEVING AND TIED INTO CABLE ASSY UNTIL USED.

| WIRE CODE NO. | GA | MATERIAL | LG | TERMINALS | | | SERIALS |
|---|---|---|---|---|---|---|---|
| BLU/WHT | 22 | S-1460-22-6-9 | | SOLDER | | | |
| BLACK | 16 | S-1460-16-0 | | | | S-1367-2-8 | |
| RED | 16 | S-1460-16-2 | | | | S-1367-2-6 | |
| YELLOW | 18 | S-1460-18-4 | | | | SOLDER | |
| WHT/BLK | 22 | S-1460-229-0 | | | | | |
| TAN | 22 | S-1460-22-10 | | | | | |
| GREEN | 20 | S-1460-20-5 | | | | | |
| BLUE | 22 | S-1460-22-6 | | SOLDER | | | |

WIRE TABLE

| ITEM NO. | PART NO. | DESCRIPTION | INSTALLED ON |
|---|---|---|---|
| 8 | S-1360-10 | CIRCUIT BREAKER | |
| 7 | 1270461-1 | BUS BAR | |
| 6 | R-12½-75-RS39 | RHEOSTAT (TRTA) | |
| 5 | 1270420-4 | VHF ANT. INSTL | |
| 4 | 1270420-9 | OMNI ANT. INSTL | |
| 3 | 0770033-95 | CABLE ASSY | |
| 2 | 0770033-97 | CABLE ASSY | |
| 1 | KX-150 | DIRECTOR (KG) | |

EQUIPMENT TABLE

CESSNA AIRCRAFT CO. COMMERCIAL AIRCRAFT DIVISION WICHITA, KANSAS

| | NAME | DATE |
|---|---|---|
| DRAWN | G WOOD | 8-16-63 |
| GROUP | | |
| CHECK | R Black | 8-21-63 |
| PROJ | H. McCarter | 8-23-63 |

TITLE: WIRING DIAGRAM — KING KX-150 (OPT)

Cessna.

DWG NO: 1270625

SUPERSEDED BY | SUPERSEDES | MODEL | REV | PAGE

| LET | REVISION | DATE | APPD |
|---|---|---|---|
| | | | |

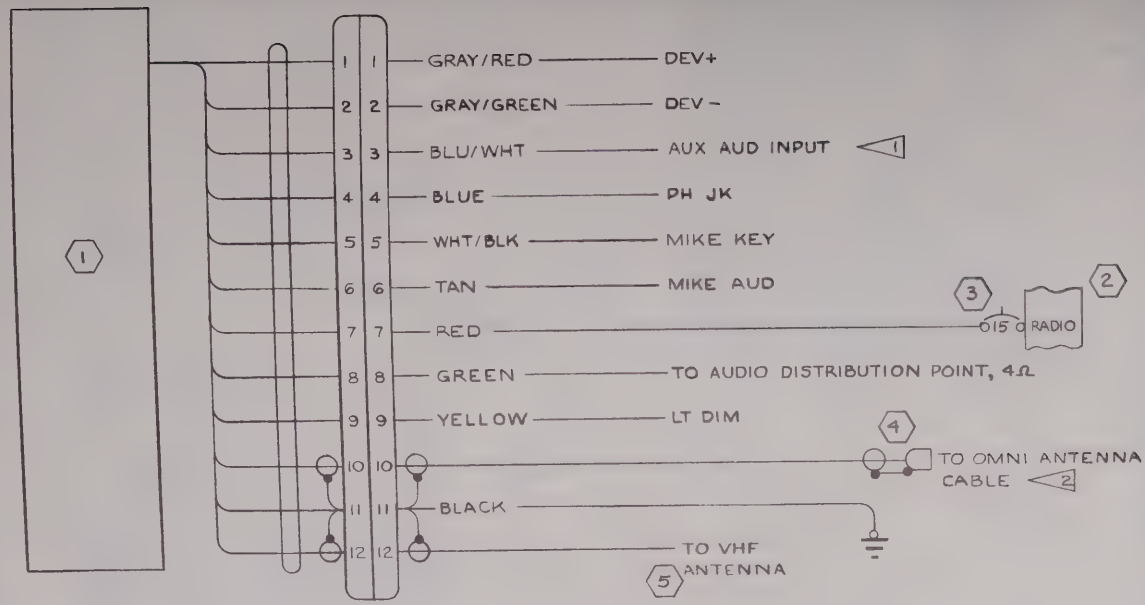


NOTES :

1. END OF WIRE TO BE COVERED WITH SLEEVING AND TIED INTO CABLE UNTIL USED.
2. 0770033-128 CABLE ASSY IS 17.0 LONG. CONNECTS TO OMNI ANTENNA CABLE ON SINGLE INSTL; CONNECTS TO "T" CONNECTOR ON DUAL INSTL.
3. CABLE ASSYS MADE PER THIS DWG ARE USED ON MODELS OTHER THAN 182. CHANGES MADE TO THIS DWG SHOULD ALSO BE MADE TO WIRING DIAGRAMS ON THE OTHER MODELS USING THESE CABLE ASSYS.

| WIRE CODE NO. | GA | MATERIAL | LG | TERMINALS | | N/A | SERIALS |
|---|---|---|---|---|---|---|---|
| GRY/RED | 22 | S-1460-22-8-2 | | SOLDER | | 0770705 | |
| GRY/GRN | 22 | S-1460-22-8-5 | | | | | |
| BLU/WHT | 22 | S-1460-22-6-9 | | | | | |
| BLACK | 16 | S-1460-16-0 | | | S-1367-2-8 | | |
| RED | 16 | S-1460-16-2 | | | S-1367-2-6 | | |
| YELLOW | 18 | S-1460-18-4 | | | SOLDER | | |
| WHT/BLK | 22 | S-1460-22-9-0 | | | | | |
| TAN | 22 | S-1460-22-10 | | | | | |
| GREEN | 20 | S-1460-20-5 | | | | | |
| BLUE | 22 | S-1460-22-6 | | SOLDER | | 0770705 | |

WIRE TABLE

| ITEM NO. | PART NO. | DESCRIPTION | INSTALLED ON |
|---|---|---|---|
| | 0770033-131 | CABLE ASSY | |
| 4 | 0770033-128 | CABLE ASSY | |
| 3 | S-1360-15 | CIRCUIT BREAKER | |
| 2 | 1270461-1 | BUS BAR | |
| 1 | KX-150A | DIRECTOR (KG) | |

EQUIPMENT TABLE

CESSNA AIRCRAFT CO. COMMERCIAL AIRCRAFT DIVISION, WICHITA, KANSAS

| | NAME | DATE |
|---|---|---|
| DRAWN | G. WOOD | 10-29-65 |
| GROUP | | |
| CHECK | | |
| PROJ | | |

TITLE: WIRING DIAGRAM — KING KX-150A (OPT)

Cessna.

DWG NO. 1270625

| SUPERSEDED BY: | SUPERSEDES: 1270625 PAGE 17.15.1 | MODEL: 205, 206 | REV: | PAGE: 17.15.2 |
|---|---|---|---|---|

FORM NO. 80-161

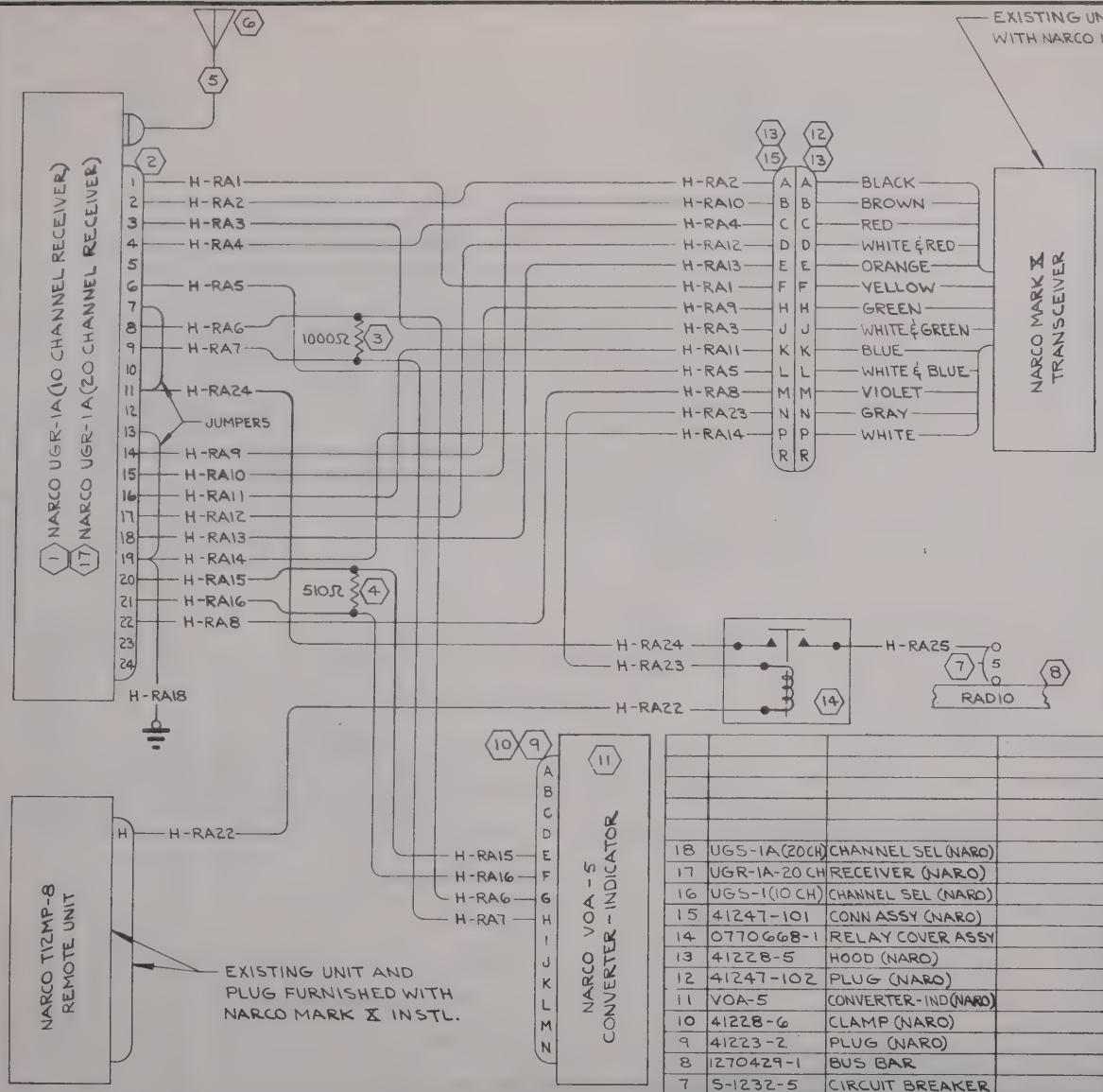


UGR-1A GLIDE SLOPE WITH NARCO MARK V & VOA-5

| CHG LET | REVISION | BY DATE | CHK APPD |
|---|---|---|---|
| | | | |

Inactive
SER 205-0481 & ON
6-4-63
H.H.W. RAS

| ITEM NO | PART NO. | DESCRIPTION | INSTALLED ON |
|---|---|---|---|
| 18 | UGS-1A(20CH) | CHANNEL SEL (NARO) | |
| 17 | UGR-1A-20 CH | RECEIVER (NARO) | |
| 16 | UGS-1(10 CH) | CHANNEL SEL (NARO) | |
| 15 | 41247-101 | CONN ASSY (NARO) | |
| 14 | 0770668-1 | RELAY COVER ASSY | |
| 13 | 41228-5 | HOOD (NARO) | |
| 12 | 41247-102 | PLUG (NARO) | |
| 11 | VOA-5 | CONVERTER-IND (NARO) | |
| 10 | 41228-6 | CLAMP (NARO) | |
| 9 | 41223-2 | PLUG (NARO) | |
| 8 | 1270429-1 | BUS BAR | |
| 7 | S-1232-5 | CIRCUIT BREAKER | |
| 6 | 1270420-7 | ANTENNA INSTL | |
| 5 | 0770033-98 | RF CABLE | |
| 4 | 510Ω ±5% ½ WATT | RES (OM) "LITTLE DEVIL" | |
| 3 | 1000Ω ±10% ½ WATT | RES (OM) "LITTLE DEVIL" | |
| 2 | 41246-1 | CONN ASSY (NARO) | |
| 1 | UGR-1A-10 CH | RECEIVER (NARO) | |

EQUIPMENT TABLE

| WIRE CODE NO. | GA | MATERIAL | LG | TERMINALS | | N/A | SERIALS |
|---|---|---|---|---|---|---|---|
| H-RA26 | 22 | | | SOLDER | SOLDER | 1270641 | |
| H-RA25 | 18 | | | | S-1367-1-8 | | |
| H-RA24 | 18 | | | | SOLDER | | |
| H-RA23 | 18 | | | | SOLDER | | |
| H-RA22 | 18 | | | SOLDER | SOLDER | 1270641 | |
| | | | | | | | |
| | | | | | | | |
| | | | | | | | |
| H-RA18 | 18 | | | SOLDER | S-1367-1-8 | 1270641 | |
| H-RA17 | 18 | | | | S-1367-1-8 | | |
| H-RA16 | 22 | | | | SOLDER | | |
| H-RA15 | 22 | | | | | | |
| H-RA14 | 22 | | | | | | |
| H-RA13 | 22 | | | | | | |
| H-RA12 | 22 | | | | | | |
| H-RA11 | 22 | | | | | | |
| H-RA10 | 22 | | | | | | |
| H-RA9 | 22 | | | | | | |
| H-RA8 | 18 | | | | | | |
| H-RA7 | 22 | | | | | | |
| H-RA6 | 22 | | | | | | |
| H-RA5 | 22 | | | | | | |
| H-RA4 | 22 | | | | | | |
| H-RA3 | 22 | | | | | | |
| H-RA2 | 22 | | | | | | |
| H-RA1 | 22 | | | SOLDER | SOLDER | 1270641 | |

WIRE TABLE

CESSNA AIRCRAFT CO. COMMERCIAL AIRCRAFT DIVISION WICHITA KANSAS

| | NAME | DATE |
|---|---|---|
| DRAWN | RIDDER | 8-27-62 |
| GROUP | J.W. Martin | 9-20-62 |
| CHECK | C. Stuck | 9-20-62 |
| PROJ | N. McCarter | 9-24-62 |

TITLE: WIRING DIAGRAM — NARCO UGR-1A GLIDE SLOPE WITH NARCO MARK V OR MARK X & VOA-5 (OPT)

Cessna.

DWG NO: 1270625

| SUPERSEDED BY | SUPERSEDES | MODEL | REV. | PAGE |
|---|---|---|---|---|
| 1270625 PAGE 17.20 | | 205 | | 17.16 |

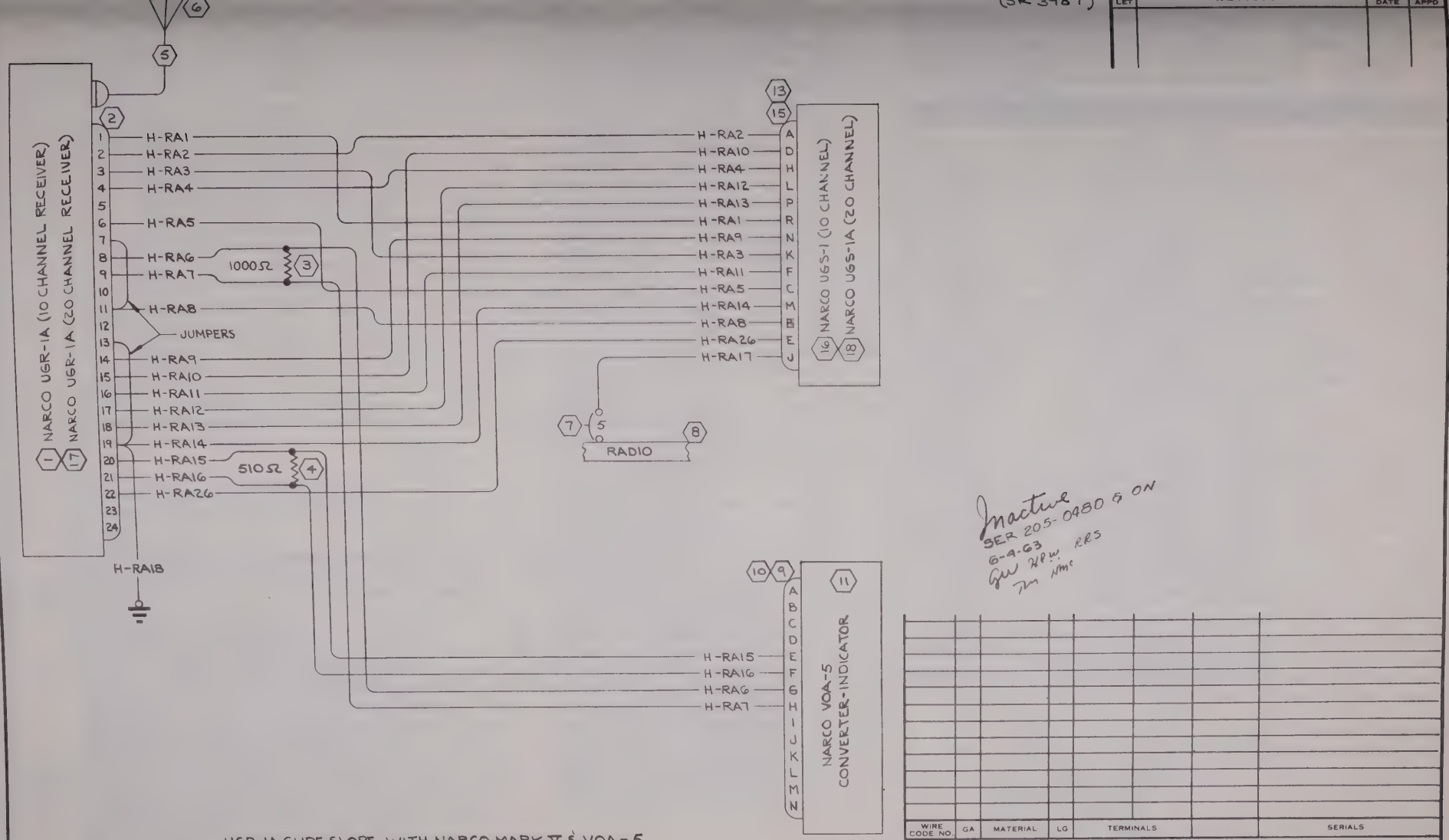


UGR-1A GLIDE SLOPE WITH NARCO MARK V & VOA-5

Inactive
SER 205-0480 & ON
6-9-63

| ITEM NO | PART NO. | DESCRIPTION | INSTALLED ON |
|---|---|---|---|

EQUIPMENT TABLE

| WIRE CODE NO. | GA | MATERIAL | LG | TERMINALS | | SERIALS |
|---|---|---|---|---|---|---|

WIRE TABLE

CESSNA AIRCRAFT CO. COMMERCIAL AIRCRAFT DIVISION WICHITA KANSAS

| | NAME | DATE |
|---|---|---|
| DRAWN | RIDDER | 8-27-62 |
| GROUP | C.W. Martin | 9-20-62 |
| CHECK | R. Stuck | 9-20-62 |
| PROJ | N. McClarty | 9-24-62 |

TITLE: WIRING DIAGRAM — NARCO UGR-1A GLIDE SLOPE WITH NARCO MARK V OR MARK V & VOA-5 (OPT)

Cessna.

DWG NO. 1270625

| SUPERSEDED BY: | SUPERSEDES | MODEL: | REV: | PAGE: |
|---|---|---|---|---|
| 1270625 PAGE 17.24 | | 205 | | 17.16.1 |

FORM NO. 80-161

(SR 3899)

| CHG LET | REVISION | BY DATE | CHK APPD |
|---|---|---|---|
| | | | |

NOTES:

1. REEL ASSY MAY BE EITHER NO. 31-420, GARWIN INC, WICHITA OR SP-10010, STANDARD PRODUCTS INC, WICHITA. NO. 31-402A GARWIN INC IS ALTERNATE.
2. REFER TO 1270625 PAGE 17.9, 17.1 & 11.2
3. SERIES CAPACITANCE IS REQUIRED ON FREQUENCIES 9.0 MC & ABOVE WHEN A 27 TO 28 FOOT ANT. IS USED. ADD JUMPER WIRE BETWEEN WAFERS FOR LOWER FREQ
4. 0814308-5 ANTENNA WIRE (120 FEET) REPLACES 0814308-2 (100 FEET) WHEN ANY XMTR-RCVR FREQUENCY TO BE USED IS BELOW 2400 KC.
5. USE ELMENCO TYPE VCM-20, 2500 WVDC, ±5% CAPACITORS FOR SERIES CAPACITANCE BETWEEN WAFERS WHEN REQD (SEE NOTE 3). PARALLEL CONNECT (2) 10 MMFD CAPACITORS FOR FREQ 9.0 MC & HIGHER THEN ADJUST TAP ON LOAD COIL FOR RESONANCE.
6. H-RH64, H-RH60, H-RH74, H-RH75, H-RH62 & H-RH76 WIRES TO BE CODED "PH-JK", "MIKE AUD", "MIKE KEY", "MIKE GND", "SPKR" & "LT DIM" RESPECTIVELY. NUMERICAL CODING SHOWN IS OPTIONAL.
7. WIRES THAT CONNECT TO REEL MOTOR ARE SOLDERED TO PLUG AFTER INSTL IN AIRPLANE BECAUSE OF STA 124.0 BHD HOLE SIZE LIMITATION.

Inactive SER 2705-0481 & ON 7-16-63 H.W. R.R.S. W.M.C.

| ITEM | PART NO. | DESCRIPTION | INSTALLED ON |
|---|---|---|---|
| 46 | 17005 | CONNECTOR | |
| 45 | 17004 | CONNECTOR | |
| 44 | 30D192A1 | CAPACITOR (SPR) | |
| 43 | 1270636-1 | CABLE ASSY | |
| 42 | HIF | FUSEHOLDER (BUS) | |
| 41 | AGA2 | FUSE (BUS) | |
| 40 | 0770033-105 | CABLE ASSY | |
| 39 | 0814308-2 | ANTENNA WIRE | |
| 38 | 0770033-104 | CABLE ASSY | |
| 37 | TYPE VCM-20 | CAPACITOR | |
| 36 | 0770033-103 | CABLE ASSY | |
| 35 | 0770033-102 | CABLE ASSY | |
| 34 | 0770033-70 | CABLE ASSY | |
| 33 | 1270625-RP1 | WIRE | |
| 32 | 1270625-RP5 | WIRE | |
| 31 | 1270625-RP4 | WIRE | |
| 30 | 1270625-RP3 | WIRE | |
| 29 | 1270625-RP2 | WIRE | |
| 28 | 1270625-RH9 | WIRE | |
| 27 | 1270625-RH7 | WIRE | |
| 26 | 1270625-RH6 | WIRE | |
| 25 | 1270625-RH4 | WIRE | |
| 24 | 1270625-RH3 | WIRE | |
| 23 | 1270625 RH8 | WIRE | |
| 22 | 1270625-RH1 | WIRE | |
| 21 | 1270625-RH2 | WIRE | |
| 20 | BLUE | WIRE | |
| 19 | 1270625-RH5 | WIRE | |
| 18 | 1270625-LG2 | WIRE | |
| 17 | 1270625-LB1 | WIRE | |
| 16 | 1270625-LG1 | WIRE | |
| 15 | 1270429-1 | BUS BAR | |
| 14 | S-1232-15 | CIRCUIT BREAKER | |
| 13 | S-1232-10 | CIRCUIT BREAKER | |
| 12 | 0770033-118 | CABLE ASSY | |
| 11 | 1270420-10 | ANTENNA | |
| 10 | 0411062-9 | SPEAKER | |
| 9 | S-1102-1 | MIKE JACK | |
| 8 | S-1103-1 | PHONE JACK | |
| 7 | 0812509-29 | COIL ASSY | |
| 6 | 1 | REEL ASSY | |
| 5 | 0770630-3 | CONTROL PANEL | |
| 4 | 39001 | ANT. CURRENT SENSE UNIT | (PNTR) |
| 3 | 39002 | ANT. SW ASSY | (PNTR) |
| 2 | DX10-PS | POWER SUPPLY | (PNTR) |
| 1 | DX10-D | PAN. TRANSCEIVER | (PNTR) |

EQUIPMENT TABLE

| WIRE CODE NO. | GA | MATERIAL | LG | TERMINALS | | N/A | SERIALS |
|---|---|---|---|---|---|---|---|
| H-RH81 | 20 | | | S-1370-0 | S-1370-0 | 1270642 | |
| H-RH80 | 20 | | | S-1370-0 | S-1370-0 | ↑ | |
| H-RH79 | 14 | | | SOLDER | S-1367-2-B | | |
| H-RH78 | 14 | | | SOLDER | S-1367-2-B | 1270642 | |
| | | | | | | | |
| H-RH76 | 20 | | | SOLDER | S-1370-0 | 1270642 | |
| H-RH75 | 20 | | | SOLDER | S-1370-0 | 1270642 | |
| H-RH74 | 20 | | | SOLDER | S-1370-0 | 1270642 | |
| H-RH73 | 20 | | | SOLDER | CONN TO H-RH54 | 1270602 | |
| H-RH72 | 20 | | | SOLDER | CONN TO H-RH57 | 1270602 | |
| H-RH71 | 20 | | | SOLDER | CONNECT TO H-RH55 | 1270602 | |
| H-RH70 | 20 | | | SOLDER | CONNECT TO H-RH53 | 1270602 | |
| H-RH69 | 20 | | | SOLDER | CONNECT TO H-RH52 | 1270602 | |
| H-RH68 | 20 | | | SOLDER | CONNECT TO H-RH51 | 1270602 | |
| H-RH67 | 18 | | | SOLDER | SOLDER | 1270642 | |
| H-RH66 | 18 | | | SOLDER | S-1367-1-B | ↑ | |
| H-RH65 | 20 | | | SOLDER | SOLDER | | |
| H-RH64 | 20 | | | SOLDER | S-1370-0 | | |
| H-RH63 | 20 | | | SOLDER | SOLDER | | |
| H-RH62 | 20 | | | SOLDER | S-1370-0 | | |
| H-RH61 | 20 | | | SOLDER | SOLDER | | |
| H-RH60 | 20 | | | SOLDER | S-1370-0 | | |
| H-RH59 | 20 | | | SOLDER | SOLDER | | |
| H-RH58 | 20 | | | SOLDER | SOLDER | | |
| H-RH57 | 20 | | | SOLDER | S-1370-0 | | |
| H-RH56 | 20 | | | SOLDER | SOLDER | | |
| H-RH55 | 20 | | | SOLDER | S-1370-0 | | |
| H-RH54 | 20 | | | SOLDER | S-1370-0 | | |
| H-RH53 | 20 | | | SOLDER | S-1370-0 | | |
| H-RH52 | 20 | | | SOLDER | S-1370-0 | | |
| H-RH51 | 20 | | | SOLDER | S-1370-0 | 1270642 | |

WIRE TABLE

CESSNA AIRCRAFT CO. COMMERCIAL AIRCRAFT DIVISION, WICHITA, KANSAS

| | NAME | DATE |
|---|---|---|
| DRAWN | G WOOD | 9-19-62 |
| GROUP | [illegible] | 11-1-62 |
| CHECK | R. Stuck | 11-1-62 |
| PROJ. | W. McCarter | 11-7-62 |

TITLE: WIRING DIAGRAM — PANTRONICS DX10-D HF TRANSCEIVER INSTALLATION (OPT)

Cessna.

DWG NO. 1270625

REV

PAGE:

SUPERSEDED BY

SUPERSEDES

MODEL

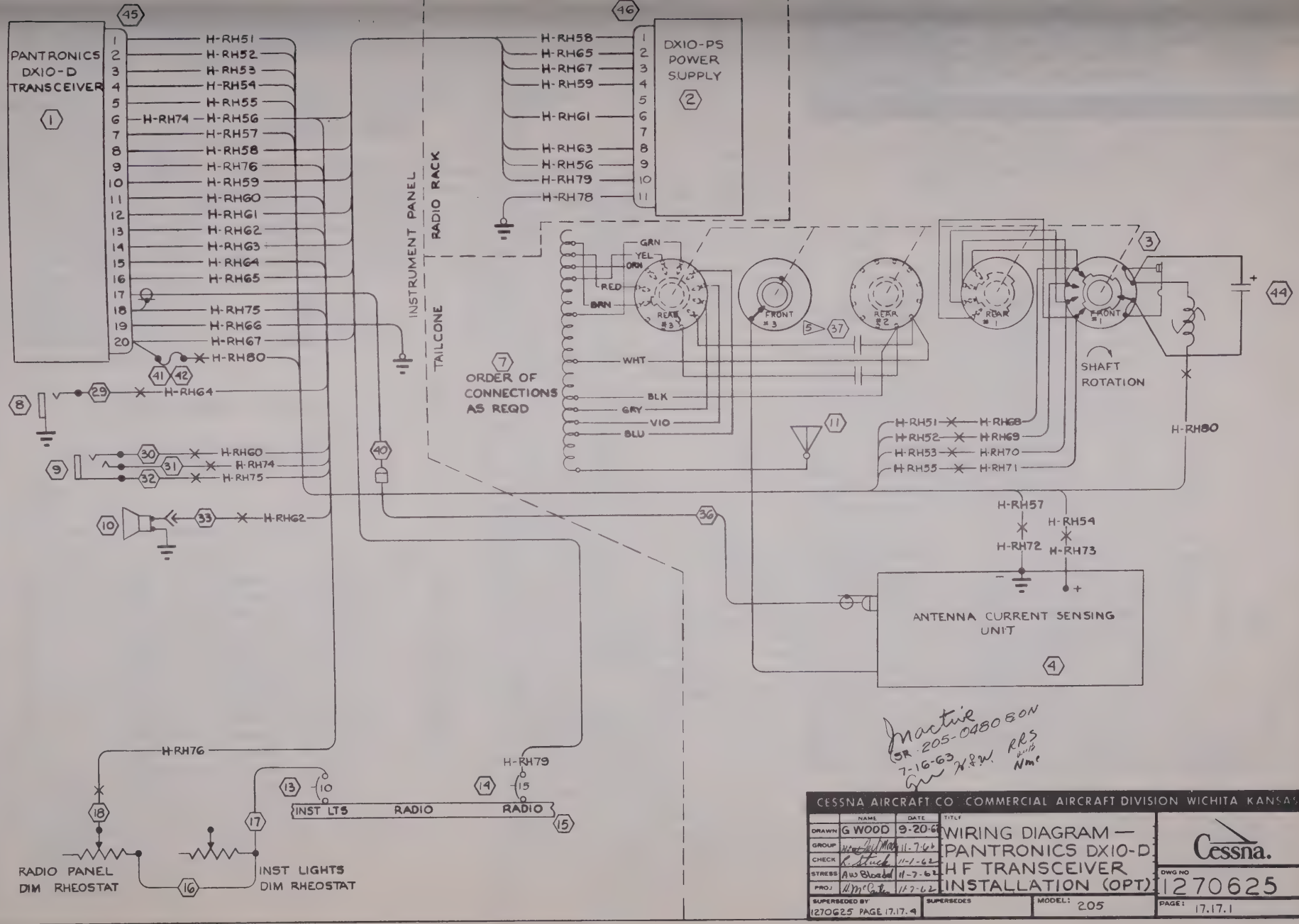
PANTRONICS DX10-D TRANSCEIVER
DX10-PS POWER SUPPLY
INSTRUMENT PANEL
RADIO RACK
TAILCONE
ORDER OF CONNECTIONS AS REQD
GRN
YEL
ORN
RED
BRN
WHT
BLK
GRY
VIO
BLU
REAR #3
FRONT #3
REAR #2
REAR #1
FRONT #1
SHAFT ROTATION
H-RH51
H-RH52
H-RH53
H-RH54
H-RH55
H-RH56
H-RH57
H-RH58
H-RH59
H-RH60
H-RH61
H-RH62
H-RH63
H-RH64
H-RH65
H-RH66
H-RH67
H-RH68
H-RH69
H-RH70
H-RH71
H-RH72
H-RH73
H-RH74
H-RH75
H-RH76
H-RH78
H-RH79
H-RH80
ANTENNA CURRENT SENSING UNIT
INST LTS
RADIO
RADIO
RADIO PANEL DIM RHEOSTAT
INST LIGHTS DIM RHEOSTAT
Inactive
SR 205-0480 ON
7-16-63
CESSNA AIRCRAFT CO COMMERCIAL AIRCRAFT DIVISION WICHITA KANSAS
DRAWN G WOOD 9-20-62
GROUP 11-7-62
CHECK R. Stuck 11-1-62
STRESS A W Bloedel 11-7-62
PROJ 11-7-62
TITLE WIRING DIAGRAM — PANTRONICS DX10-D HF TRANSCEIVER INSTALLATION (OPT)
Cessna.
DWG NO 1270625
SUPERSEDED BY 1270625 PAGE 17.17.4
SUPERSEDES
MODEL: 205
PAGE: 17.17.1

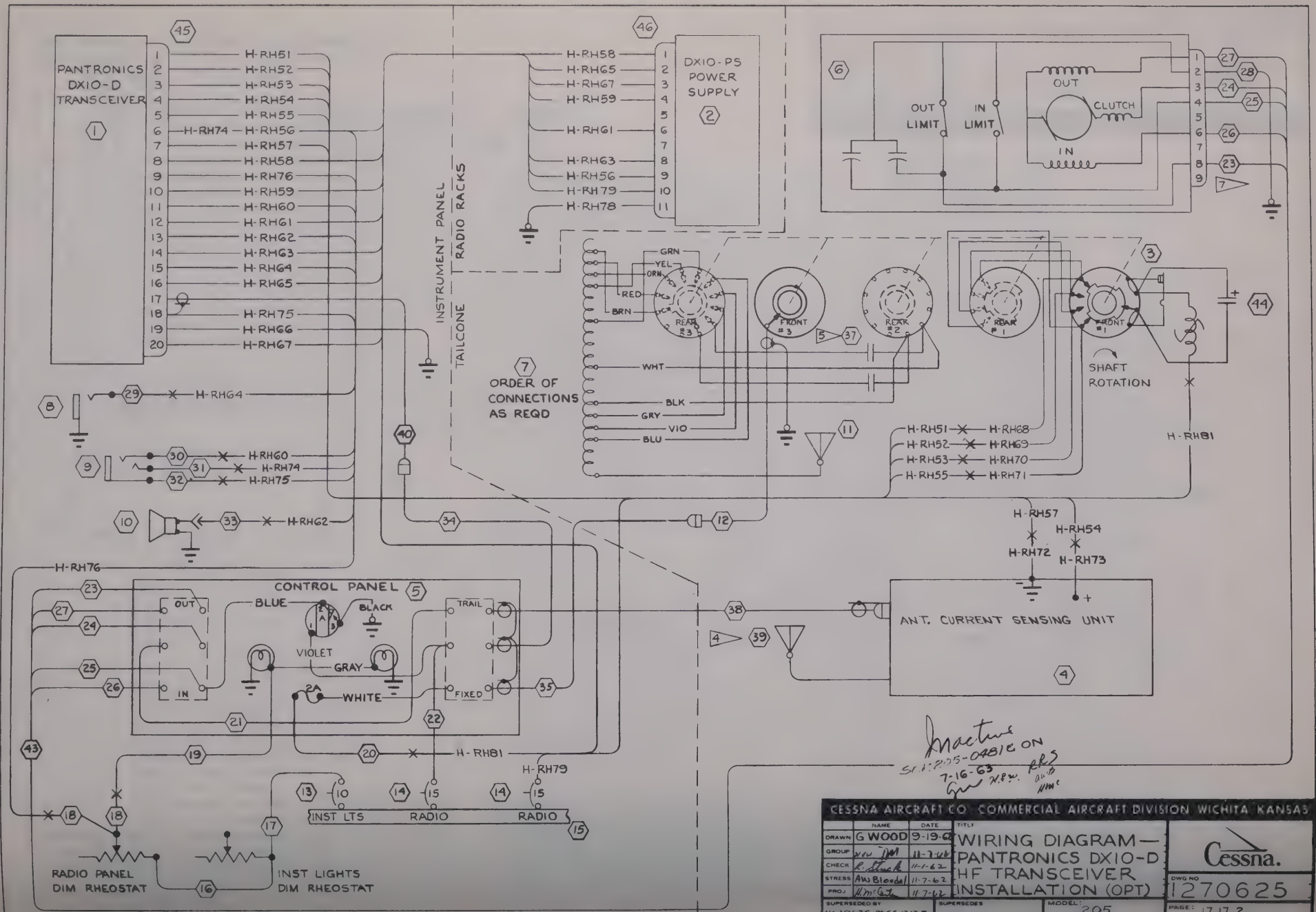
PANTRONICS DX10-D TRANSCEIVER
DX10-PS POWER SUPPLY
INSTRUMENT PANEL
RADIO RACKS
TAILCONE
ORDER OF CONNECTIONS AS REQD
OUT LIMIT
IN LIMIT
OUT
CLUTCH
IN
REAR #3
FRONT #3
REAR #2
REAR #1
FRONT #1
SHAFT ROTATION
CONTROL PANEL
OUT
IN
BLUE
BLACK
VIOLET
GRAY
WHITE
TRAIL
FIXED
ANT. CURRENT SENSING UNIT
INST LTS
RADIO
RADIO
RADIO PANEL DIM RHEOSTAT
INST LIGHTS DIM RHEOSTAT
Inactive
SN: 205-0481E ON
7-16-63
CESSNA AIRCRAFT CO. COMMERCIAL AIRCRAFT DIVISION WICHITA KANSAS
NAME
DATE
DRAWN G WOOD 9-19-62
GROUP 11-7-62
CHECK 11-1-62
STRESS AW Bloodel 11-7-62
PROJ 11-7-62
TITLE
WIRING DIAGRAM— PANTRONICS DX10-D HF TRANSCEIVER INSTALLATION (OPT)
Cessna.
DWG NO 1270625
SUPERSEDED BY
SUPERSEDES
MODEL: 205
PAGE: 17.17.2

(SR 3983-9)

NOTES:

1. REEL ASSY MAY BE EITHER NO. 31-420, GARWIN INC, WICHITA OR SP-10010, STANDARD PRODUCTS INC, WICHITA. NO. 31-402A GARWIN INC IS ALTERNATE.
2. REFER TO 1270625 PAGE 17.9, 17.1 & 11.2
3. SERIES CAPACITANCE IS REQD ON FREQUENCIES 8.0 MC & ABOVE WHEN A 27 TO 28 FOOT ANT. IS USED. ADD JUMPER WIRE BETWEEN WAFERS FOR LOWER FREQUENCIES.
4. 0814308-5 ANTENNA WIRE (120 FEET) REPLACES 0814308-2 (100 FEET) WHEN ANY XMTR-RCVR FREQUENCY TO BE USED IS BELOW 2400 KC.
5. USE ELMENCO TYPE VCM-20, 2500 WVDC, ±5% CAPACITORS FOR SERIES CAPACITANCE BETWEEN WAFERS WHEN REQD (SEE NOTE 3). PARALLEL CONNECT (2) 10 MMFD CAPACITORS FOR FREQ 8.0 MC & HIGHER THEN ADJUST TAP ON LOAD COIL FOR RESONANCE.
6. WIRES THAT CONNECT TO REEL MOTOR ARE SOLDERED TO PLUG AFTER INSTL IN AIRPLANE BECAUSE OF STA 124.0 BHD HOLE SIZE LIMITATION.

| ITEM NO | PART NO. | DESCRIPTION | INSTALLED ON |
|---|---|---|---|
| 46 | 17005 | CONNECTOR | (PNTR) |
| 45 | 17004 | CONNECTOR | (PNTR) |
| 44 | 30D192A1 | CAPACITOR (SPR) | |
| 43 | 1270636-1 | CABLE ASSY | |
| 42 | HIF | FUSEHOLDER (BUS) | |
| 41 | AGA2 | FUSE (BUS) | |
| 40 | 0770033-105 | CABLE ASSY | |
| 4 39 | 0814308-2 | ANTENNA WIRE | |
| 38 | 0770033-55 | CABLE ASSY | |
| 5 37 | TYPE VCM-20 | CAPACITOR | |
| 36 | 0770033-103 | CABLE ASSY | |
| 35 | 0770033-102 | CABLE ASSY | |
| 34 | 0770033-70 | CABLE ASSY | |
| 2 33 | GREEN | WIRE | |
| 32 | BLACK | WIRE | |
| 31 | WHITE/BLK | WIRE | |
| 30 | TAN | WIRE | |
| 29 | BLUE | WIRE | |
| 28 | 1270625-RH9 | WIRE | |
| 27 | 1270625-RH7 | WIRE | |
| 26 | 1270625-RH6 | WIRE | |
| 25 | 1270625-RH4 | WIRE | |
| 24 | 1270625-RH3 | WIRE | |
| 23 | 1270625-RH8 | WIRE | |
| 22 | 1270625-RH1 | WIRE | |
| 21 | 1270625-RH2 | WIRE | |
| 20 | BLUE | WIRE (BDN) | |
| 19 | 1270625-RH5 | WIRE | |
| 18 | YELLOW | WIRE | |
| 17 | 1270625-LB1 | WIRE | |
| 2 16 | YELLOW | WIRE | |
| 15 | 1270461-1 | BUS BAR | |
| 14 | S-1360-15 | CIRCUIT BREAKER | |
| 13 | S-1360-10 | CIRCUIT BREAKER | |
| 12 | 0770033-118 | CABLE ASSY | |
| 11 | 1270420-10 | ANTENNA | |
| 10 | 0911062-9 | SPEAKER | |
| 9 | S-1102-1 | MIKE JACK | |
| 8 | S-1103-1 | PHONE JACK | |
| 7 | 0812509-24 | COIL ASSY | |
| 6 | 1 | REEL ASSY | |
| 5 | 0770630-3 | CONTROL PANEL | |
| 4 | 39001 | ANT. CURRENT SENSE UNIT | (PNTR) |
| 3 | 39002 | ANTENNA SW ASSY | (PNTR) |
| 2 | DX10-PS | POWER SUPPLY | (PNTR) |
| 1 | DX10-D | PAN. TRANSCEIVER | (PNTR) |

EQUIPMENT TABLE

| WIRE CODE NO. | GA | MATERIAL | LG | TERMINALS | | N/A | SERIALS |
|---|---|---|---|---|---|---|---|
| BLU/WHT | 22 | S-1460-22-69 | | S-1370-0 | S-1370-0 | 1270642 | |
| BLU/TAN | 22 | S-1460-22-610 | | S-1370-0 | S-1370-0 | | |
| WHITE | 14 | | | SOLDER | S-1367-2-6 | | |
| WHITE | 14 | | | SOLDER | S-1367-2-8 | | |
| YELLOW | 18 | S-1460-18-4 | | SOLDER | S-1370-1 | | |
| BLACK | 22 | S-1460-22-0 | | SOLDER | S-1370-0 | | |
| WHT/BLK | 22 | S-1460-22-90 | | SOLDER | S-1370-0 | 1270642 | |
| YEL/RED | 20 | S-1460-20-4-2 | | SOLDER | MATES WITH YEL/RED WIRE | 1270602 | |
| YEL/TAN | 20 | S-1460-20-4-10 | | SOLDER | MATES WITH YEL/TAN WIRE | | |
| GRN/WHT | 20 | S-1460-20-5-9 | | SOLDER | MATES WITH GRN/WHT WIRE | | |
| GRN/BLU | 20 | S-1460-20-5-6 | | SOLDER | MATES WITH GRN/BLU WIRE | | |
| GRN/YEL | 20 | S-1460-20-5-4 | | SOLDER | MATES WITH GRN/YEL WIRE | | |
| GRN/RED | 20 | S-1460-20-5-2 | | SOLDER | MATES WITH GRN/RED WIRE | 1270602 | |
| YEL/BLK | 18 | S-1460-18-4-0 | | SOLDER | SOLDER | 1270642 | |
| BLK/WHT | 18 | S-1460-18-0-9 | | SOLDER | S-1367-1-8 | | |
| YEL/TAN | 20 | S-1460 20-4-10 | | SOLDER | SOLDER | | |
| BLUE | 22 | S-1460-22-6 | | SOLDER | S-1370-0 | | |
| GRN/WHT | 20 | S-1460-20-5-9 | | SOLDER | SOLDER | | |
| GREEN | 20 | S-1460-20-5 | | SOLDER | S-1370-0 | | |
| GRN/BLU | 20 | S-1460-20-5-6 | | SOLDER | SOLDER | | |
| TAN | 22 | S-1460-22-10 | | SOLDER | S-1370-0 | | |
| GRN/YEL | 20 | S-1460-20-5-4 | | SOLDER | SOLDER | | |
| GRN/RED | 20 | S-1460-20-5-2 | | SOLDER | SOLDER | | |
| YEL/RED | 20 | S-1460-20-4-2 | | SOLDER | S-1370-0 | | |
| YEL/GRN | 20 | S-1460-20-4-5 | | SOLDER | SOLDER | | |
| YEL/TAN | 20 | S-1460-20-4-10 | | SOLDER | S-1370-0 | | |
| GRN/WHT | 20 | S-1460-20-5-9 | | SOLDER | S-1370-0 | | |
| GRN/BLU | 20 | S-1460-20-5-6 | | SOLDER | S-1370-0 | | |
| GRN/YEL | 20 | S-1460-20-5-4 | | SOLDER | S-1370-0 | | |
| GRN/RED | 20 | S-1460-20-5-2 | | SOLDER | S-1370-0 | 1270642 | |

WIRE TABLE

CESSNA AIRCRAFT CO COMMERCIAL AIRCRAFT DIVISION WICHITA, KANSAS

| | NAME | DATE |
|---|---|---|
| DRAWN | G WOOD | 7-16-63 |
| GROUP | | |
| CHECK | R Stuck | 8-8-63 |
| PROJ | W McCarty | 8-9-63 |

TITLE: WIRING DIAGRAM — PANTRONICS DX10-D HF TRANSCEIVER INSTALLATION (OPT)

Cessna.

DWG NO. 1270625

REV:

PAGE: 17.17.3

SUPERSEDED BY

SUPERSEDES 1270625 PAGE 17.17

MODEL: 205, 206

FORM NO. 80-161

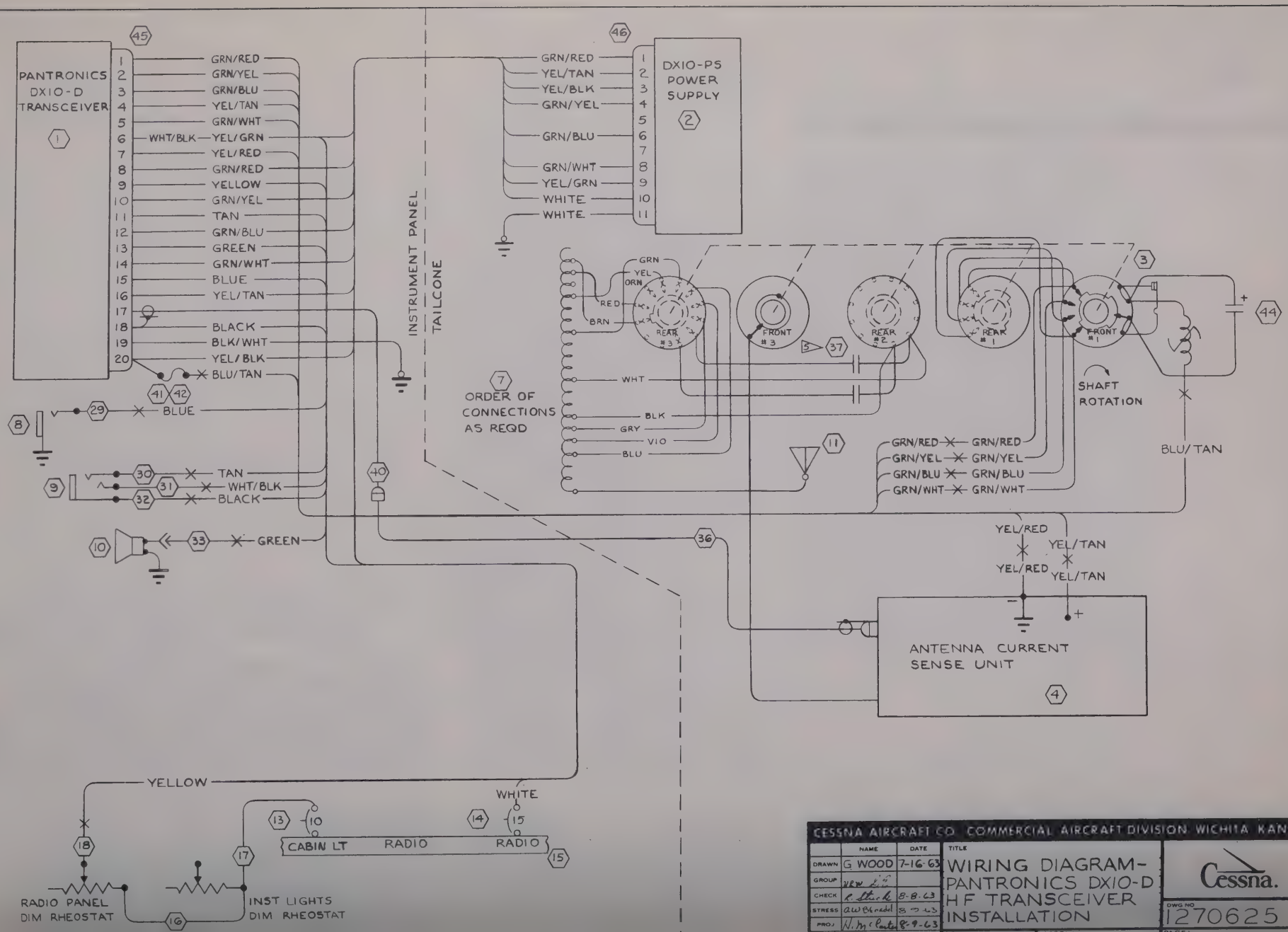


CESSNA AIRCRAFT CO. COMMERCIAL AIRCRAFT DIVISION WICHITA KANSAS

| | NAME | DATE |
|---|---|---|
| DRAWN | G WOOD | 7-16-63 |
| GROUP | NEW LIT | |
| CHECK | R Stuck | 8-8-63 |
| STRESS | A W Bradel | 8-9-63 |
| PROJ | N. Myers | 8-9-63 |

TITLE: WIRING DIAGRAM-PANTRONICS DX10-D HF TRANSCEIVER INSTALLATION

Cessna.

DWG NO 1270625

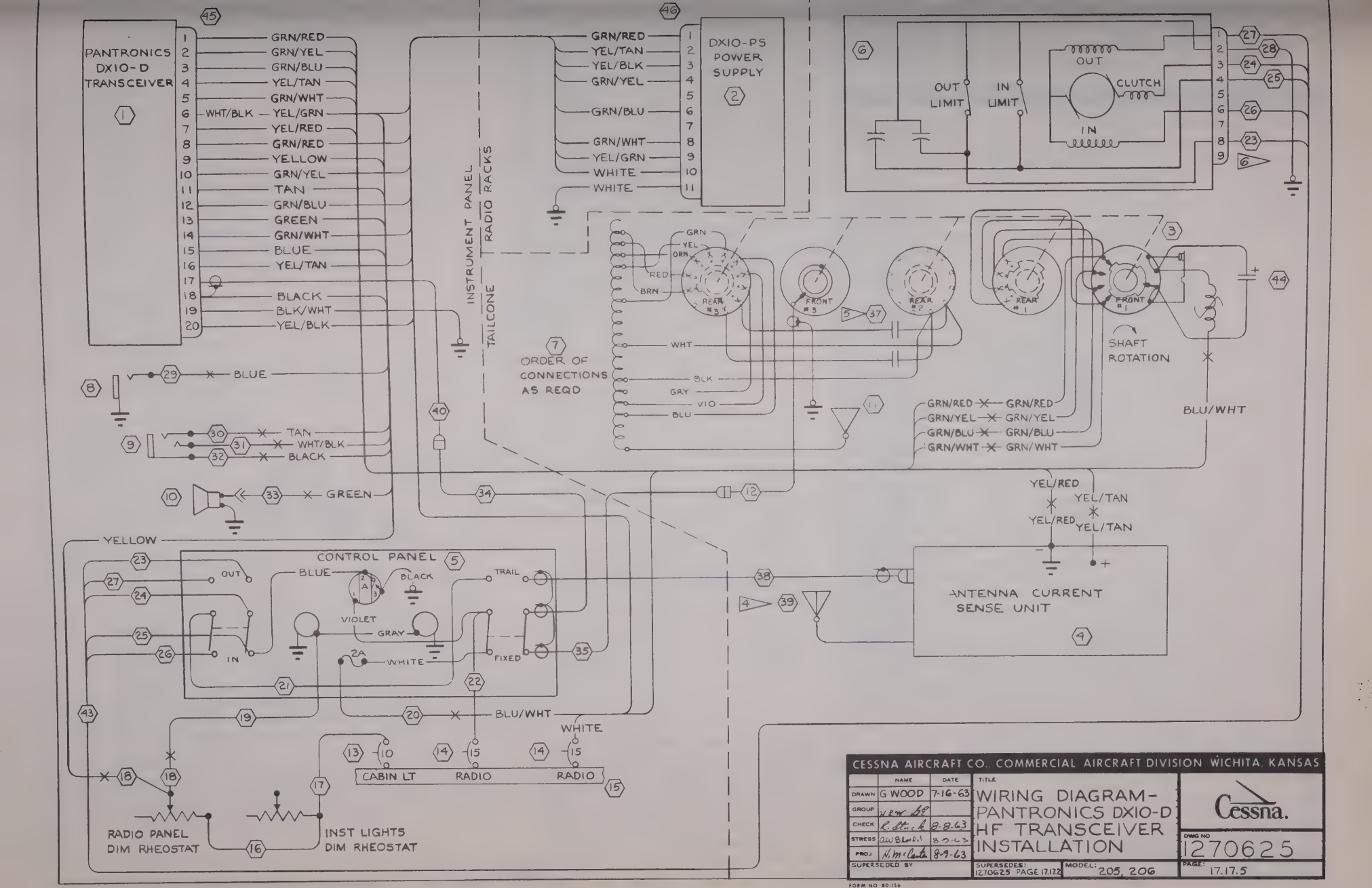
PANTRONICS DX10-D TRANSCEIVER
DX10-PS POWER SUPPLY
INSTRUMENT PANEL
RADIO RACKS
TAILCONE
ORDER OF CONNECTIONS AS REQD
OUT LIMIT
IN LIMIT
OUT
CLUTCH
IN
REAR #3
FRONT #3
REAR #2
REAR #1
FRONT #1
SHAFT ROTATION
BLU/WHT
CONTROL PANEL
OUT
IN
BLUE
BLACK
VIOLET
GRAY
WHITE
TRAIL
FIXED
ANTENNA CURRENT SENSE UNIT
CABIN LT
RADIO
RADIO
RADIO PANEL DIM RHEOSTAT
INST LIGHTS DIM RHEOSTAT
CESSNA AIRCRAFT CO. COMMERCIAL AIRCRAFT DIVISION WICHITA, KANSAS
DRAWN G WOOD 7-16-63
CHECK 8-8-63
STRESS 8-9-63
PROJ 8-9-63
SUPERSEDED BY
TITLE
WIRING DIAGRAM-PANTRONICS DX10-D HF TRANSCEIVER INSTALLATION
SUPERSEDES: 1270625 PAGE 17.17.2
MODEL: 205, 206
Cessna.
DWG NO 1270625
PAGE: 17.17.5
FORM NO 80-156

NOTES:

1. WHEN THE OMNI ANTENNA IS CONNECTED TO 2 NAV RECEIVERS, ADD A DAGE NO. 8002-1 TEE CONNECTOR AT "J102" ON THE R-319 SET & CONNECT THE ANTENNA LEAD-IN TO THIS TEE. CONNECT THE 2ND RECEIVER TO THE TEE CONNECTOR WITH A 34.5 INCH LENGTH OF RG-58A/U CABLE.

| CHG LET | REVISION | BY / DATE | CHK / APPD |
|---|---|---|---|
| A | TITLE WAS ARC TYPE 319A NAV RCVR SYSTEM (OPT) | G L W 12-9-63 | RRS |

Inactive SER 205-0481 EON
W.J.R. 6-26-63
RRS
NMC

| WIRE CODE NO. | GA | MATERIAL | LG | TERMINALS | | N/A | SERIALS |
|---|---|---|---|---|---|---|---|
| H-RD434 | 18 | | | SOLDER | SOLDER | 1270644 | |
| H-RD433 | 18 | | | | | | |
| H-RD432 | 22 | | | | | | |
| H-RD431 | 22 | | | | | | |
| H-RD430 | 22 | | | | | | |
| H-RD429 | 22 | | | | | | |
| H-RD428 | 22 | | | | | | |
| H-RD427 | 22 | | | | | | |
| H-RD426 | 22 | | | | | | |
| H-RD425 | 22S | | | | | | |
| H-RD424 | 22S | | | | | | |
| H-RD423 | 22S | | | | | | |
| H-RD422 | 22 | | | | | | |
| H-RD421 | 22 | | | | | | |
| H-RD420 | 22 | | | | | | |
| H-RD419 | 22 | | | SOLDER | SOLDER | | |
| H-RD418 | 22S | | | | SOLDER | | |
| H-RD417 | 18 | | | S-1367-1-8 | SOLDER | | |
| H-RD416 | 18 | | | S-341-1 | SOLDER | | |
| H-RD415 | 16 | | | SOLDER | SOLDER | | |
| H-RD414 | 18 | | | | | | |
| H-RD413 | 22 | | | | | | |
| H-RD412 | 22 | | | | | | |
| H-RD411 | 22 | | | | | | |
| H-RD410 | 22 | | | | | | |
| H-RD409 | 22S | | | | | | |
| H-RD408 | 22 | | | | | | |
| H-RD407 | 16 | | | | | | |
| H-RD406 | 22 | | | | | | |
| H-RD405 | 22 | | | | | | |
| H-RD404 | 22 | | | | | | |
| H-RD403 | 22 | | | | | | |
| H-RD402 | 22S | | | SOLDER | SOLDER | | |
| H-RD401 | 20 | | | S-341-2 | SOLDER | 1270644 | |

WIRE TABLE

| ITEM NO. | PART NO. | DESCRIPTION | INSTALLED ON |
|---|---|---|---|
| 20 | | | |
| 19 | | | |
| 18 | 1270429-1 | BUS BAR | |
| 17 | S-1232-10 | CIRCUIT BREAKER | |
| 16 | 0770033-86 | RF CABLE ASSY | |
| 15 | 0770033-113 | RF CABLE ASSY | |
| 14 | A-13B | ANTENNA (ARC) | |
| 13 | 1270420-9 | ANTENNA-OMNI | |
| 12 | 1270420-7 | ANTENNA-G.S. | |
| 11 | 1270625-RD100 | WIRE | |
| 10 | 0770033-112 | RF CABLE ASSY | |
| 9 | 0770033-94 | RF CABLE ASSY | |
| 8 | 0770033-115 | RF CABLE ASSY | |
| 7 | 27826 | PLUG (ARC) | |
| 6 | 27825 | PLUG (ARC) | |
| 5 | 28822 | PLUG (ARC) | |
| 4 | DY-319A | DYNAVERTER | |
| 3 | B-317A | CONVERTER (ARC) | |
| 2 | IN-319A-1 | INDICATOR (ARC) | |
| 1 | R-319A | RECEIVER (ARC) | |

EQUIPMENT TABLE

CESSNA AIRCRAFT CO COMMERCIAL AIRCRAFT DIVISION WICHITA KANSAS

| | NAME | DATE |
|---|---|---|
| DRAWN | H. WISE | 10-10-62 |
| GROUP | | 10-22-62 |
| CHECK | R. Stuck | 10-22-62 |
| PROJ | W. McCants | 10-26-62 |

TITLE: WIRING DIAGRAM — CESSNA NAV/OMNI 500 (OPT) (ARC TYPE 319A)

Cessna.

DWG NO. 1270625

SUPERSEDED BY

SUPERSEDES

MODEL 205

REV A

PAGE 1718

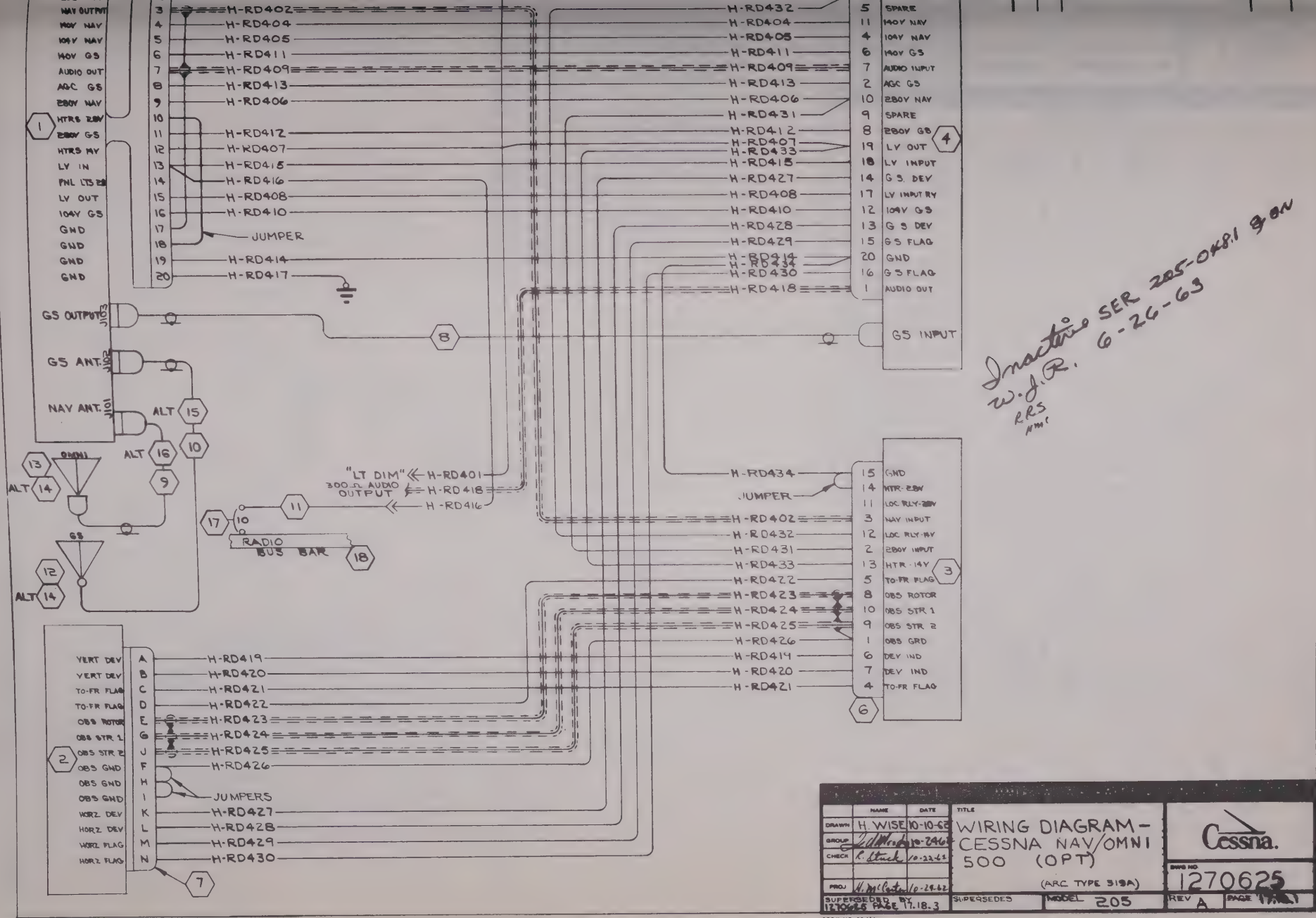


Inactive SER 205-0481 & ON
W.J.R. 6-26-63
RRS

| | NAME | DATE |
|---|---|---|
| DRAWN | H. WISE | 10-10-62 |
| GROUP | | 10-24-62 |
| CHECK | K. Stuck | 10-22-62 |
| | | |
| PROJ | | 10-29-62 |

SUPERSEDED BY 1270625 PAGE 17.18.3

TITLE: WIRING DIAGRAM - CESSNA NAV/OMNI 500 (OPT)
(ARC TYPE 319A)

Cessna.

DWG NO 1270625

SUPERSEDES | MODEL 205 | REV A | PAGE 17.18.1

FORM NO 00-136

(SR4038-9)
(SR3983-9)

| CHG LET | REVISION | BY / DATE | CHK / APPD |
|---|---|---|---|
| | | | |

NOTES:

1. WHEN THE OMNI ANTENNA IS CONNECTED TO 2 NAV RECEIVERS, ADD A DAGE NO. 8002-1 TEE CONNECTOR AT "J102" ON THE R-319 SET & CONNECT THE ANTENNA LEAD-IN TO THIS TEE. CONNECT THE 2ND RECEIVER TO THE TEE CONNECTOR WITH A 27.0 INCH LENGTH OF RG-58 A/U CABLE.
2. WHERE WIRE CODE LISTS 2 COLORS, 1ST COLOR IS BASE COLOR & 2ND COLOR IS THE STRIP.
3. WIRES FLAGGED THUS CONNECT TO 28900 OMNI COUPLER (NAV-O-MATIC 300 SYSTEM) WHEN INSTALLED.

Inactive SER 205-0577 & ON
W & R 7-8-64 206-0275 & ON
RR5 HPW

| WIRE CODE NO | GA | MATERIAL | LG | TERMINALS | | N/A | SERIALS |
|---|---|---|---|---|---|---|---|
| GRY/RED | 22 | S-1460-22-8-2 | | S-1370-1 | SOLDER | 1270644 | |
| GRY/GRN | 22 | S-1460-22-8-5 | | S-1370-1 | | | |
| BLK/WHT | 18 | S-1460-18-0-9 | | SOLDER | | | |
| RED/BLK | 18 | S-1460-18-2-0 | | | | | |
| BLU/BLK | 22 | S-1460-22-6-0 | | | | | |
| TAN/BLU | 22 | S-1460-22-10-6 | | | | | |
| BLU/RED | 22 | S-1460-22-6-2 | | | | | |
| TAN/YEL | 22 | [illegible] | | | | | |
| BLU/TAN | 22 | [illegible] | | | | | |
| BLU/YEL | 22 | S-1460-22-6-4 | | | | | |
| BLK/YEL | 22 | S-1460-22-0-4 | | | | | |
| BLU/BLK | [illegible] | S-1461-[illegible] | | | | | |
| BLU/RED | 22 | S-1461-[illegible] | | | | | |
| BLU/WHT | 22S | S-1461-22-6-9 | | | | | |
| WHT/TAN | 22 | S-1460-22-9-10 | | | | | |
| BLU/WHT | 22 | S-1460-22-6-9 | | | | | |
| WHT/RED | 22 | S-1460-22-9-2 | | | | | |
| GRY/BLU | 22 | S-1460-22-8-6 | | SOLDER | | | |
| BLUE | 22 | S-1460-22-6 | | | | | |
| BLK/WHT | 18 | S-1460-18-0-9 | | S-1367-1-8 | | | |
| RED | 16 | S-1460-16-2 | | S-1370-2 | | | |
| RED | 16 | S-1460-16-2 | | SOLDER | | | |
| BLACK | 16 | S-1460-16-0 | | | | | |
| WHT/BLU | 22 | S-1460-22-9-6 | | | | | |
| WHT/BLK | 22 | S-1460-22-9-0 | | | | | |
| WHT/GRN | 22 | S-1460-22-9-5 | | | | | |
| WHT/YEL | 22 | S-1460-22-9-4 | | | | | |
| BLU/TAN | 22S | S-1461-22-6-10 | | | | | |
| RED/GRN | 20 | S-1460-20-2-5 | | | | | |
| RED/WHT | 18 | S-1460-18-2-9 | | | | | |
| BLU/GRN | 22 | S-1460-22-6-5 | | | | | |
| TAN/RED | 22 | S-1460-22-10-2 | | | | | |
| GRY/YEL | 22 | S-1460-22-8-4 | | | | | |
| TAN/WHT | 22 | S-1460-22-10-9 | | | | | |
| BLU/YEL | 22S | S-1461-22-6-4 | | SOLDER | | | |
| YELLOW | 18 | S-1460-18-4 | | S-1370-1 | SOLDER | 1270644 | |

WIRE TABLE

| | PART NO | DESCRIPTION | INSTALLED ON |
|---|---|---|---|
| 17 | 1270461-1 | BUS BAR | |
| 16 | S-1360-10 | CIRCUIT BREAKER | |
| 15 | R-12½-75-RS34 | RHEOSTAT | |
| 14 | YELLOW | WIRE | |
| 13 | 1270420-9 | ANTENNA-OMNI | |
| 12 | 1270420-7 | ANTENNA-G.S. | |
| 11 | RED | WIRE | |
| 10 | 0770033-112 | RF CABLE ASSY | |
| 9 | 0770033-94 | RF CABLE ASSY | |
| 8 | 0770033-115 | RF CABLE ASSY | |
| 7 | 27826 | PLUG (ARC) | |
| 6 | 27825 | PLUG (ARC) | |
| 5 | 28822 | PLUG (ARC) | |
| 4 | 31360-0014 | DYNAVERTER (ARC) | |
| 3 | 24660 | CONVERTER (ARC) | |
| 2 | 27510 | INDICATOR (ARC) | |
| 1 | 28310-1000 | RECEIVER (ARC) | |

CESSNA AIRCRAFT CO., COMMERCIAL AIRCRAFT DIVISION, WICHITA, KANSAS

| | NAME | DATE |
|---|---|---|
| DRAWN | RIDDER | 6-26-63 |
| GROUP | [illegible] | 7-17-63 |
| CHECK | [illegible] | 7-15-63 |
| PROJ | H. McCarter | 7-17-63 |

TITLE: WIRING DIAGRAM — CESSNA NAV OMNI 500 (OPT)

319A

Cessna.

DWG NO 1270625

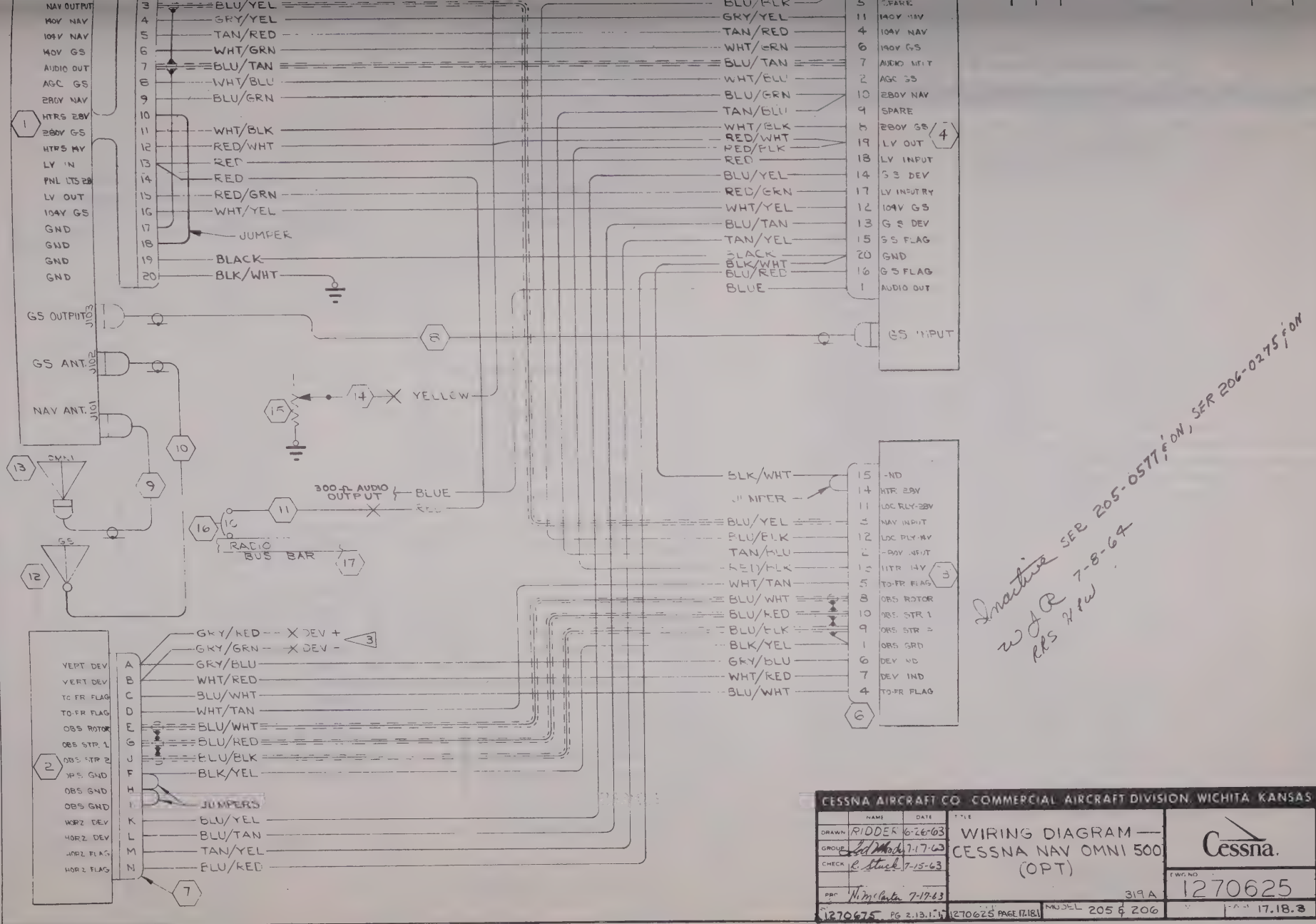

NAV OUTPUT
140V NAV
104V NAV
140V GS
AUDIO OUT
AGC GS
280V NAV
HTRS 28V
280V GS
HTRS 14V
LV IN
PNL LTS 28
LV OUT
104V GS
GND
GND
GND
GND
BLU/YEL
GRY/YEL
TAN/RED
WHT/GRN
BLU/TAN
WHT/BLU
BLU/GRN
WHT/BLK
RED/WHT
RED
RED
RED/GRN
WHT/YEL
JUMPER
BLACK
BLK/WHT
GS OUTPUT
J103
GS ANT.
J102
NAV ANT.
J101
YELLOW
300 Ω AUDIO OUTPUT
BLUE
RED
RADIO BUS BAR
OMNI
GS
VERT DEV
VERT DEV
TO FR FLAG
TO FR FLAG
OBS ROTOR
OBS STR 1
OBS STR 2
OBS GND
OBS GND
OBS GND
HORZ DEV
HORZ DEV
HORZ FLAG
HORZ FLAG
GRY/RED
GRY/GRN
DEV +
DEV -
GRY/BLU
WHT/RED
BLU/WHT
WHT/TAN
BLU/WHT
BLU/RED
BLU/BLK
BLK/YEL
JUMPERS
BLU/YEL
BLU/TAN
TAN/YEL
BLU/RED
BLU/BLK
GRY/YEL
TAN/RED
WHT/GRN
BLU/TAN
WHT/BLU
BLU/GRN
TAN/BLU
WHT/BLK
RED/WHT
RED/BLK
RED
BLU/YEL
RED/GRN
WHT/YEL
BLU/TAN
TAN/YEL
BLACK
BLK/WHT
BLU/RED
BLUE
SPARE
140V NAV
104V NAV
140V GS
AUDIO INPUT
AGC GS
280V NAV
SPARE
280V GS
LV OUT
LV INPUT
G S DEV
LV INPUT RY
104V GS
G S DEV
G S FLAG
GND
G S FLAG
AUDIO OUT
GS INPUT
BLK/WHT
JUMPER
BLU/YEL
BLU/BLK
TAN/BLU
RED/BLK
WHT/TAN
BLU/WHT
BLU/RED
BLU/BLK
BLK/YEL
GRY/BLU
WHT/RED
BLU/WHT
GND
HTR 28V
LOC RLY-28V
NAV INPUT
LOC RLY-14V
280V INPUT
HTR 14V
TO-FR FLAG
OBS ROTOR
OBS STR 1
OBS STR 2
OBS GRD
DEV IND
DEV IND
TO-FR FLAG
Inactive SER 205-0577 & ON, SER 206-0275 & ON
W J R 7-8-64
RRS H PW
CESSNA AIRCRAFT CO. COMMERCIAL AIRCRAFT DIVISION, WICHITA KANSAS
NAME
DATE
DRAWN RIDDER 6-26-63
GROUP 7-17-63
CHECK R. Stuck 7-15-63
PRC N. McCarter 7-17-63
TITLE
WIRING DIAGRAM — CESSNA NAV OMNI 500 (OPT)
319 A
Cessna.
DWG NO 1270625
1270675 PG 2.13.1.1
1270625 PAGE 17.18.1
MODEL 205 & 206
17.18.3

(SR 3936)

| CHG LET | REVISION | BY / DATE | CHK / APPD |
|---|---|---|---|
| A | TITLE WAS ARC TYPE 302A COMMUNICATION SYSTEM (OPT) | GLW 12-4-63 | RRS |

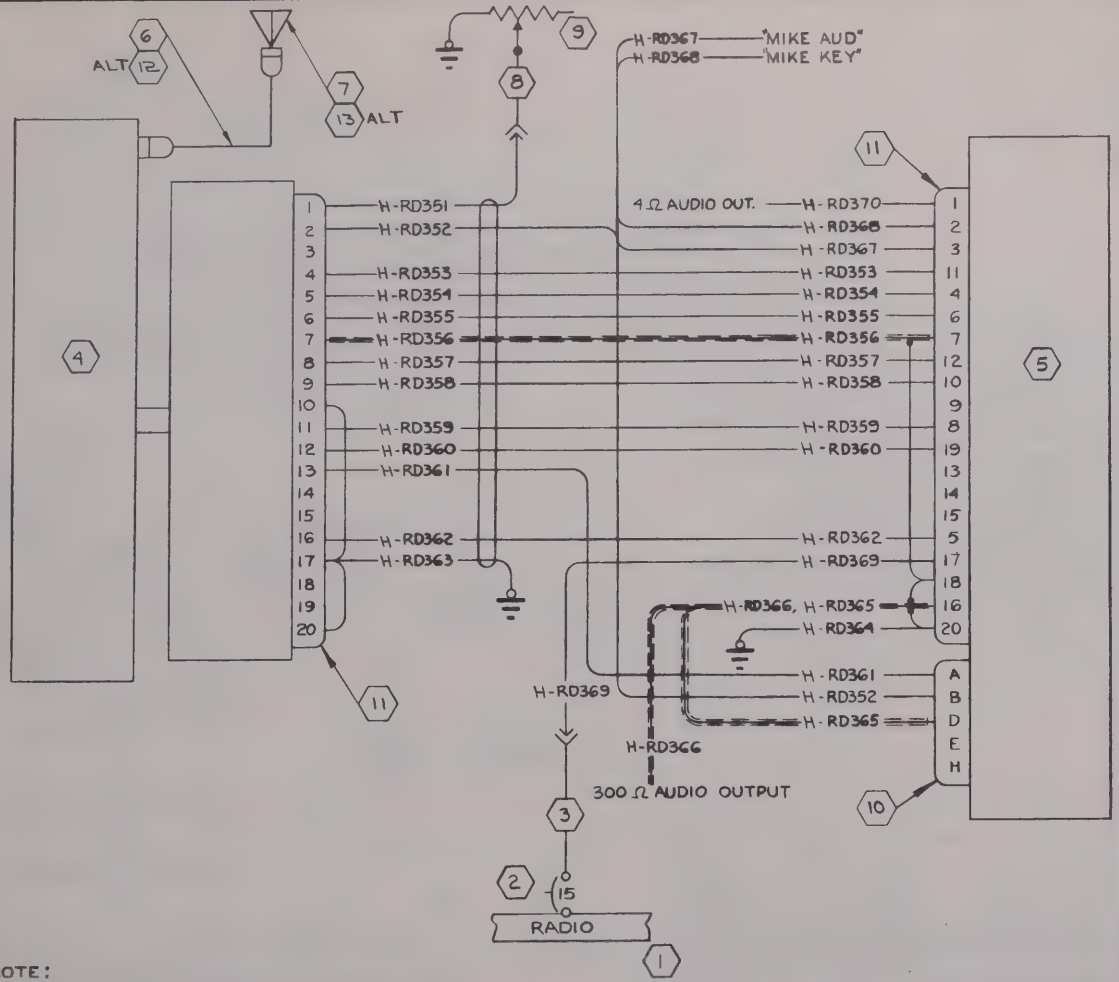


Inactive SER 205-0481 & ON 6-25-63 GW H.S.W. GE RRS NMC

NOTE:

1. H-RD367 & H-RD368 WIRES TO BE CODED "MIKE AUD" & "MIKE KEY" RESPECTIVELY. NUMERICAL CODING PER CES 1100 IS OPTIONAL ON THESE WIRES.

| ITEM NO | PART NO. | DESCRIPTION | INSTALLED ON |
|---|---|---|---|
| 13 | 1270420-4 | ANTENNA INSTL | |
| 12 | 0770033-56 | R.F. CABLE ASSY | |
| 11 | 28808 | PLUG (ARC) | |
| 10 | 28371 | PLUG (ARC) | |
| 9 | R-12½-75-RS34 | RHEOSTAT (TRTA) | |
| 8 | 1270625-LG2 | WIRE | |
| 7 | A-25A | ANTENNA (ARC) | |
| 6 | 0770033-85 | R.F. CABLE ASSY | |
| 5 | DV-302A | DYNAVERTER (ARC) | |
| 4 | RT-302A | TRANSCEIVER (ARC) | |
| 3 | 1270625-RD101 | WIRE | |
| 2 | S-1232-15 | CIRCUIT BREAKER | |
| 1 | 1270429-1 | BUS BAR | |

EQUIPMENT TABLE

| WIRE CODE NO. | GA | MATERIAL | LG | TERMINALS | | N/A | SERIALS |
|---|---|---|---|---|---|---|---|
| H-RD370 | 20 | | | | SOLDER | 1270643 | |
| H-RD369 | 16 | | | S-341-1 | | | |
| H-RD368 | 22 | | | | | | |
| H-RD367 | 22 | | | | | | |
| H-RD366 | 22-S | | | | | | |
| H-RD365 | 22-S | | | SOLDER | | | |
| H-RD364 | 16 | | | S-341-1 | | | |
| H-RD363 | 16 | | | S-341-1 | | | |
| H-RD362 | 22 | | | SOLDER | | | |
| H-RD361 | 22 | | | | | | |
| H-RD360 | 18 | | | | | | |
| H-RD359 | 22 | | | | | | |
| H-RD358 | 22 | | | | | | |
| H-RD357 | 22 | | | | | | |
| H-RD356 | 22-S | | | | | | |
| H-RD355 | 22 | | | | | | |
| H-RD354 | 22 | | | | | | |
| H-RD353 | 22 | | | | | | |
| H-RD352 | 22 | | | SOLDER | | | |
| H-RD351 | 22 | | | S-341-2 | SOLDER | 1270643 | |

WIRE TABLE

CESSNA AIRCRAFT CO. COMMERCIAL AIRCRAFT DIVISION WICHITA KANSAS

| | NAME | DATE |
|---|---|---|
| DRAWN | G. WOOD | 11-5-62 |
| GROUP | [signature] | 11-28-62 |
| CHECK | R. Stuck | 11-27-62 |
| PROJ | H. McCarter | 11-30-62 |

TITLE: WIRING DIAGRAM — CESSNA TRANSCEIVER 500 (OPT) (ARC TYPE 302A)

Cessna.

DWG NO: 1270625

SUPERSEDED BY: 1270625 PAGE 1719-1 | SUPERSEDES | MODEL 205 | REV A | PAGE 1719

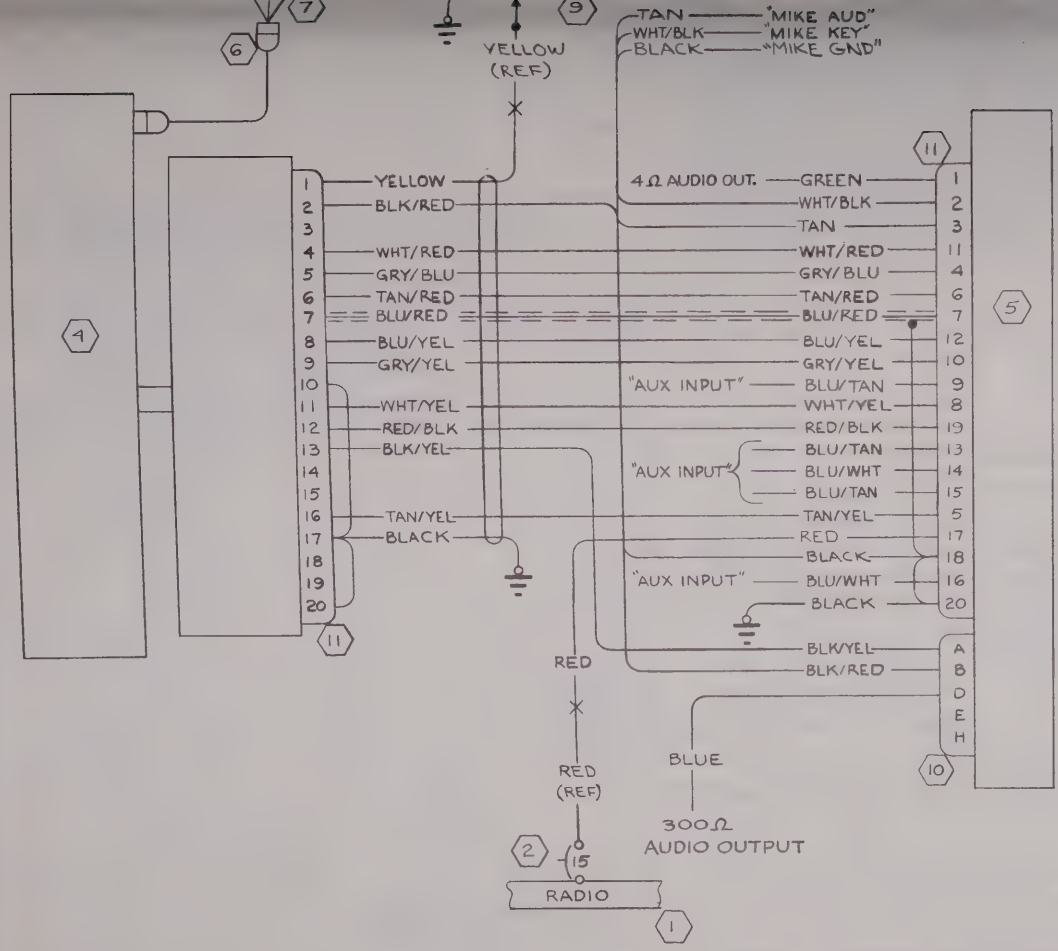


| A | ADDED BLACK "MIKE GND" WIRE FROM PIN 18; IN E/T 1470053-1 WAS A-25A ; INACTIVATED DRAWING (SR4956), (SR4957) | WJR 7-8-64 | RRS |
|---|---|---|---|

Inactive SER 205-0577 & ON AND 206-0275 & ON
WJR 7-8-64
RRS

| WIRE CODE NO | GA | MATERIAL | LG | TERMINALS | | N/A | SERIALS |
|---|---|---|---|---|---|---|---|
| BLACK | 22 | S-1460-22-0 | | SOLDER | | 1270643 | |
| BLU/TAN | 22 | S-1460-22-6-10 | | SOLDER | | 1270643 | |
| BLU/TAN | 22 | S-1460-22-6-10 | | SOLDER | | | |
| BLU/TAN | 22 | S-1460-22-6-10 | | SOLDER | | | |
| BLU/WHT | 22 | S-1460-22-6-9 | | SOLDER | | | |
| BLU/WHT | 22 | S-1460-22-6-9 | | SOLDER | | | |
| BLACK | 16 | S-1460-16-0 | | SOLDER | S-1367-2-8 | | |
| RED/BLK | 18 | S-1460-18-2-0 | | SOLDER | SOLDER | | |
| BLUE | 22 | S-1460-22-6 | | SOLDER | SOLDER | | |
| BLU/YEL | 22 | S-1460-22-6-4 | | SOLDER | SOLDER | | |
| BLU/RED | 22S | S-1461-22-6-2 | | SOLDER | SOLDER | | |
| GREEN | 20 | S-1460-20-5 | | SOLDER | | | |
| WHT/BLK | 22 | S-1460-22-9-0 | | SOLDER | | | |
| TAN | 22 | S-1460-22-10 | | SOLDER | | | |
| TAN/YEL | 22 | S-1460-22-10-4 | | SOLDER | SOLDER | | |
| TAN/RED | 22 | S-1460-22-10-2 | | SOLDER | SOLDER | | |
| GRY/YEL | 22 | S-1460-22-8-4 | | SOLDER | SOLDER | | |
| GRY/BLU | 22 | S-1460-22-8-6 | | SOLDER | SOLDER | | |
| WHT/YEL | 22 | S-1460-22-9-4 | | SOLDER | SOLDER | | |
| WHT/RED | 22 | S-1460-22-9-2 | | SOLDER | SOLDER | | |
| BLK/YEL | 22 | S-1460-22-0-4 | | SOLDER | SOLDER | | |
| BLACK | 16 | S-1460-16-0 | | S-1367-2-8 | SOLDER | | |
| BLK/RED | 22 | S-1460-22-0-2 | | SOLDER | SOLDER | | |
| YELLOW | 18 | S-1460-18-4 | | SOLDER | S-1370-1 | | |
| RED | 16 | S-1460-16-2 | | SOLDER | S-1370-2 | 1270643 | |

WIRE TABLE

| ITEM NO | PART NO. | DESCRIPTION | INSTALLED ON |
|---|---|---|---|
| 11 | 28808 | PLUG (ARC) | |
| 10 | 28371 | PLUG (ARC) | |
| 9 | R-12½-75-RS34 | RHEOSTAT (TRTA) | |
| 8 | | | |
| 7 | 1470053-1 | ANTENNA | |
| 6 | 0770033-85 | R F CABLE ASSY | |
| 5 | 284-20-0014 | DYNAVERTER (ARC) | |
| 4 | 28410-1000 | TRANSCEIVER (ARC) | |
| 3 | | | |
| 2 | S-1360-15 | CIRCUIT BREAKER | |
| 1 | 1270461-1 | BUS BAR | |

EQUIPMENT TABLE

CESSNA AIRCRAFT CO COMMERCIAL AIRCRAFT DIVISION, WICHITA, KANSAS

| | NAME | DATE |
|---|---|---|
| DRAWN | G WOOD | 6-25-63 |
| GROUP | [illegible] | 8-5-63 |
| CHECK | C Stuck | 8-6-63 |
| PROJ | H.M. Gates | 8-8-63 |

TITLE: WIRING DIAGRAM — CESSNA TRANSCEIVER 500 302A

Cessna.

DWG NO. 1270625

SUPERSEDED BY 1270675 | SUPERSEDES 1270625 PAGE 17.19 | MODEL: 205, 206 | REV: A | PAGE: 17.19.1

FORM NO 80-161

(SR 4099)

| CHG LET | REVISION | BY DATE | CHK APPD |
|---|---|---|---|
| A | PIN 13 ON XMTR WAS PHONE-ADF; PIN 14 ON XMTR WAS AUDIO-ADF. (SR4099) | WJR 3-13-63 | |
| B | BY REVISION: ADD MODEL 206<br>DELETE NOTE 3<br>ADD S-1360-5 CKT BKR<br>1270461-1 BUS BAR WAS 1270929-1 (SR4038-9) (SR 3981-9) | GLW 8-3-63 | |

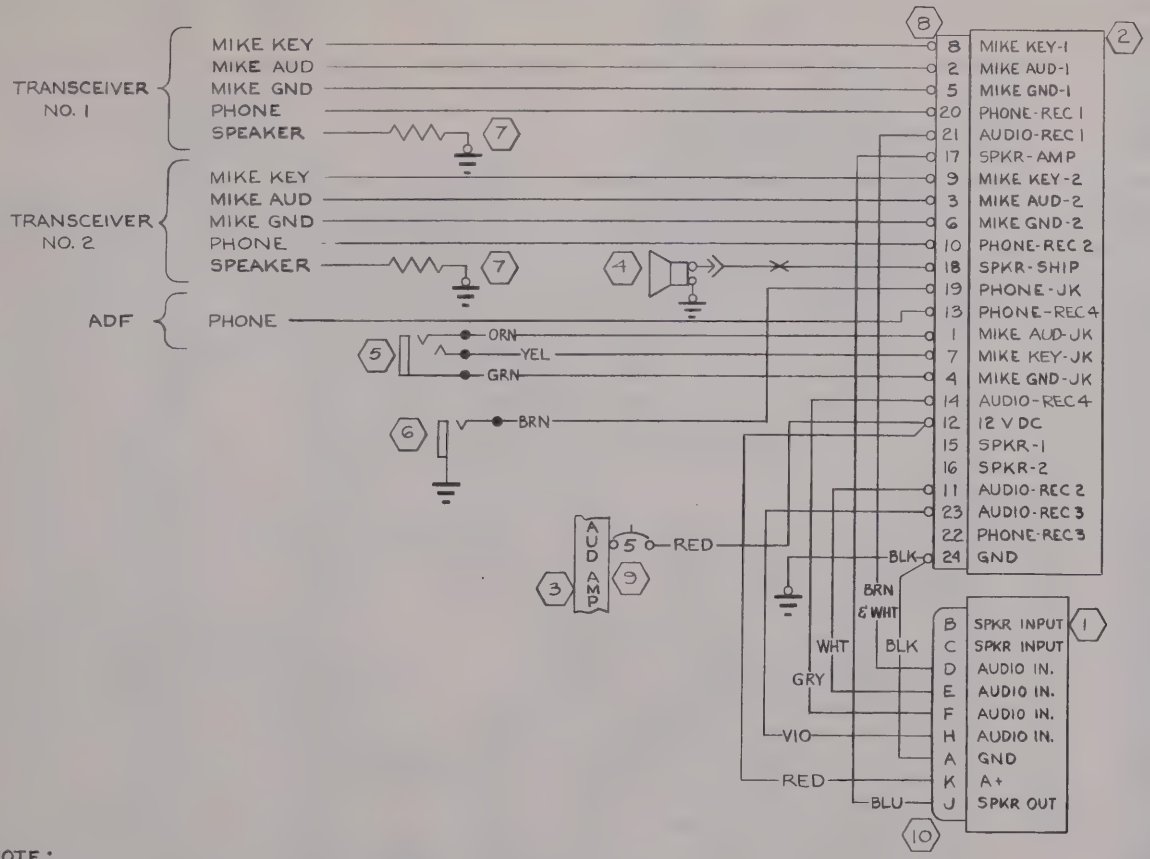


NOTE:

1. BLACK WIRES REQUIRE S-1367-1-6 TERMINALS ON SELECTOR SWITCH END, & S-1367-1-8 TERMINAL ON GND END.
2. RED WIRES REQUIRE S-1367-1-6 TERMINALS ON SELECTOR SWITCH END, & S-1367-1-8 TERMINAL ON CIRCUIT BREAKER END.
3. ~~CONNECT TO A RADIO CIRCUIT BREAKER, PREFERABLY THE 5 AMP BREAKER USED ON THE ADF INSTL.~~

| ITEM | PART NO. | DESCRIPTION | INSTALLED ON |
|---|---|---|---|
| 10 | 126-222 | CONNECTOR (AMBL) | |
| 9 | S-1360-5 | CIRCUIT BREAKER | |
| 8 | 601-2104-12 | TERMINAL BLOCK (KKE) | |
| 7 | 5 OHM 5 WATT AXIAL LEAD | RESISTOR (OM) | |
| 6 | S-1103-1 | PHONE JACK | |
| 5 | S-1102-1 | MIKE JACK | |
| 4 | 0911062-9 | SPEAKER ASSY | |
| 3 | 1210461-1 | BUS BAR | |
| 2 | 1270616-1 | XMTR & AUD SEL SW | |
| 1 | KA-10 | ISO AMPLIFIER (KG) | |

| WIRE CODE NO. | GA | MATERIAL | LG | TERMINALS | | N/A | SERIALS |
|---|---|---|---|---|---|---|---|
| BROWN & WHITE | 20 | BELDEN 8523 | | S-1367-1-6 | SOLDER | 0770619 | |
| WHITE | 20 | | | S-1367-1-6 | SOLDER | | |
| GRAY | 20 | | | S-1367-1-6 | SOLDER | | |
| VIOLET | 20 | | | S-1367-1-6 | SOLDER | | |
| BLUE | 20 | | | S-1367-1-6 | SOLDER | | |
| GREEN | 20 | | | S-1367-1-6 | SOLDER | | |
| YELLOW | 20 | | | S-1367-1-6 | SOLDER | | |
| ORANGE | 20 | | | S-1367-1-6 | SOLDER | | |
| RED | 20 | | | 2 | SOLDER | | |
| BROWN | 20 | | | S-1367-1-6 | SOLDER | | |
| BLACK | 20 | BELDEN 8523 | | 1 | SOLDER | 0770619 | |

WIRE TABLE

CESSNA AIRCRAFT CO COMMERCIAL AIRCRAFT DIVISION WICHITA KANSAS

| | NAME | DATE |
|---|---|---|
| DRAWN | G WOOD | 12-19-62 |
| GROUP | | 2-22-63 |
| CHECK | | 2-25-63 |
| PROJ | | 3-1-63 |

TITLE: WIRING DIAGRAM — TRANSMITTER & AUDIO SELECTOR SWITCH WITH KING KA-10 AMPLIFIER

Cessna.

DWG NO: 1270625

SUPERSEDED BY | SUPERSEDES | MODEL 205 & 206 | REV: B | PAGE: 17-20

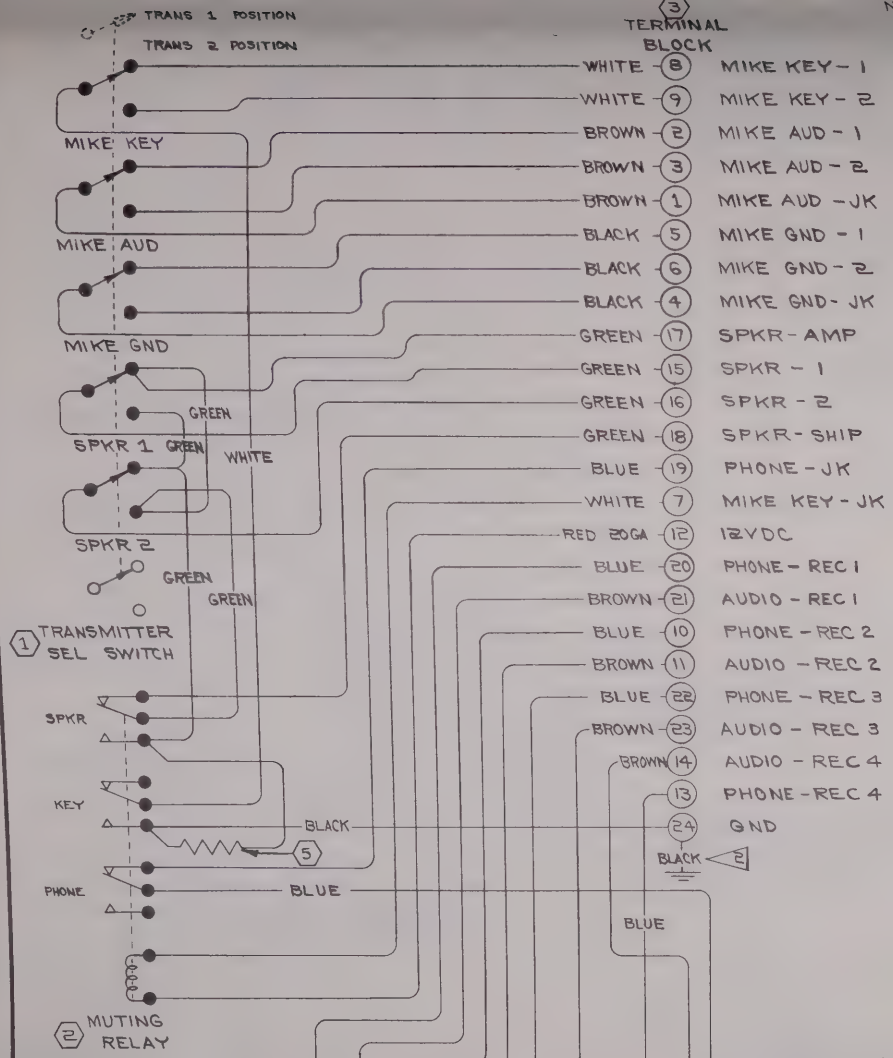


3 TERMINAL BLOCK

| | | |
|---|---|---|
| WHITE | 8 | MIKE KEY - 1 |
| WHITE | 9 | MIKE KEY - 2 |
| BROWN | 2 | MIKE AUD - 1 |
| BROWN | 3 | MIKE AUD - 2 |
| BROWN | 1 | MIKE AUD - JK |
| BLACK | 5 | MIKE GND - 1 |
| BLACK | 6 | MIKE GND - 2 |
| BLACK | 4 | MIKE GND - JK |
| GREEN | 17 | SPKR - AMP |
| GREEN | 15 | SPKR - 1 |
| GREEN | 16 | SPKR - 2 |
| GREEN | 18 | SPKR - SHIP |
| BLUE | 19 | PHONE - JK |
| WHITE | 7 | MIKE KEY - JK |
| RED 20GA | 12 | 12VDC |
| BLUE | 20 | PHONE - REC 1 |
| BROWN | 21 | AUDIO - REC 1 |
| BLUE | 10 | PHONE - REC 2 |
| BROWN | 11 | AUDIO - REC 2 |
| BLUE | 22 | PHONE - REC 3 |
| BROWN | 23 | AUDIO - REC 3 |
| BROWN | 14 | AUDIO - REC 4 |
| | 13 | PHONE - REC 4 |
| BLACK | 24 | GND |

BLACK 2

NOTES:
1. ALL WIRES TO BE 22GA COLOR CODED BELDEN WIRE NO. 8524 EXCEPT THE RED WIRE TO BE 20 GA. BELDEN WIRE NO. 8523.
2. CONNECT TERMINAL 24 TO MOUNTING ENCLOSURE TO PROVIDE AIRFRAME GND
3. REFER TO 1270616 FOR SWITCH ASSEMBLY DETAILS

| DWG LET | REVISION | DATE | APPD |
|---|---|---|---|
| A | TERM 14 WAS AUDIO - ADF; TERM 13 WAS PHONE - ADF; REC 4 WAS ADF (SR4099) | WJR 3-13-63 | |
| B | BY REVISION: ADD MODEL 206 (SR 3583-9) | GLW 8-4-63 | |

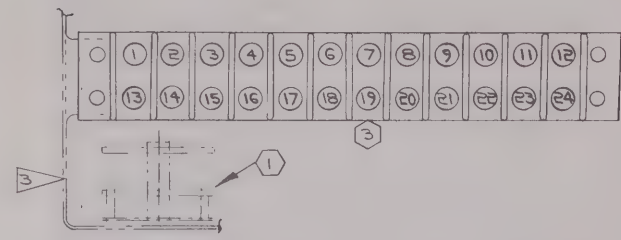


TOP VIEW OF TERMINAL BLOCK AS ASSEMBLED IN SWITCH BOX
TERMINAL BLOCK TO BE CONNECTED TO OTHER COMPONENTS IN BOX SO THAT CIRCUIT FUNCTION & TERMINAL NUMBERS SHOWN ON SCHEMATIC AGREE WITH THIS VIEW

| WIRE CODE NO. | GA | MATERIAL | LG | TERMINALS | | SERIALS |
|---|---|---|---|---|---|---|
| | | 1 | | SOLDER | SOLDER | 1270616 |
| | | | | | N/A | |

WIRE TABLE

| ITEM NO | PART NO. | DESCRIPTION | INSTALLED ON |
|---|---|---|---|
| 5 | 50HM, 5WATT AXIAL LEAD | RESISTOR (OM) | |
| 4 | 8816K9 | SWITCH (CUT) | |
| 3 | 601-2104-12 | TERMINAL BLOCK (HKE) | |
| 2 | 1205-48-3C-AG12VDC | RELAY (GN) | |
| 1 | PA-1018 | ROTARY SWITCH (CNY) | |

EQUIPMENT TABLE

CESSNA AIRCRAFT CO. COMMERCIAL AIRCRAFT DIVISION, WICHITA, KANSAS

| | NAME | DATE |
|---|---|---|
| DRAWN | RIDDER | 2-15-63 |
| GROUP | | 2-22-63 |
| CHECK | | 2-25-63 |
| PROJ | | 3-1-63 |

TITLE: WIRING DIAGRAM — TRANSMITTER AND AUDIO SELECTOR SWITCHES (OPT)

Cessna.

DWG NO. 1270625

| SUPERSEDED BY: | SUPERSEDES 1270625 PAGE 17.12 | MODEL: 205, 206 | REV: B | PAGE: 17.21 |
|---|---|---|---|---|

FORM NO. 80-161

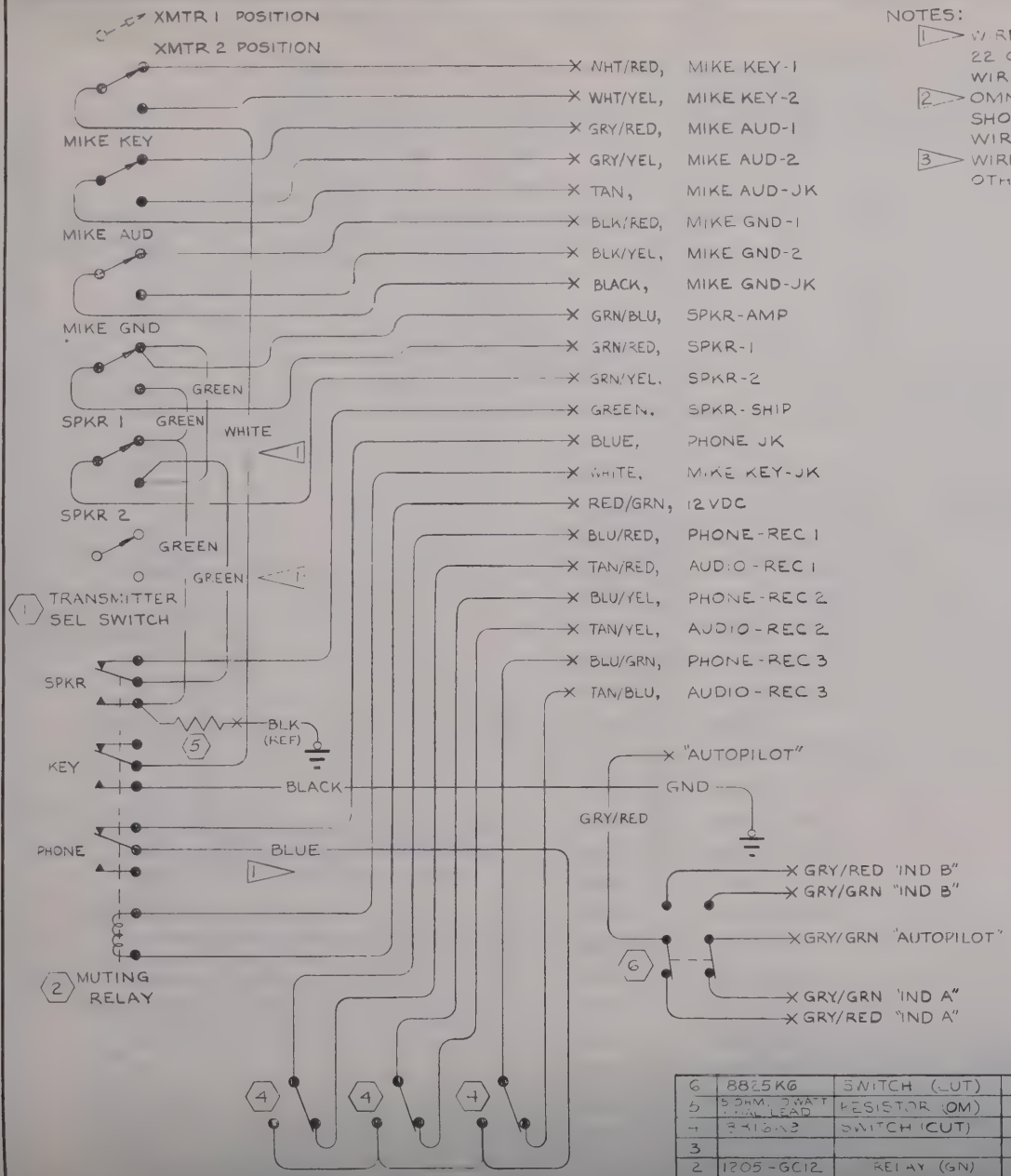


NOTES: (SR 4391)

1. WIRES BETWEEN SWITCHES TO BE 22 GA COLOR CODED BELDEN WIRE NO. 8524.
2. OMNI SWITCH WIRES SAME AS SHOWN ON 0770693. STAMP WIRES WITH INDICATED FUNCTION.
3. WIRE MATERIAL PER S-1460 UNLESS OTHERWISE NOTED.

| CHG LET | REVISION | BY DATE | CHK APPD |
|---|---|---|---|
| | | | |

| WIRE CODE NO | GA | MATERIAL | LG | TERMINALS | | N/A | SERIALS |
|---|---|---|---|---|---|---|---|
| GRY/GRN | 22 | -22-8-5 | | SOLDER | S-1370-1 | 1270624 | |
| GRY/GRN | 22 | -22-8-5 | | | | | |
| GRY/GRN | 22 | -22-8-5 | | | | | |
| GRY/RED | 22 | -22-8-2 | | | | | |
| GRY/RED | 22 | -22-8-2 | | | | | |
| GRY/RED | 22 | -22-8-2 | | | | | |
| WHITE | 20 | -20-9 | | | | | |
| RED/GRN | 20 | -20-2-5 | | | | | |
| WHT/RED | 22 | -22-9-2 | | | | | |
| WHT/YEL | | -22-9-4 | | | | | |
| GRY/RED | | -22-8-2 | | | | | |
| GRY/YEL | | -22-8-4 | | | | | |
| TAN | | -22- | | | | | |
| BLK/RED | | -22-0-2 | | | | | |
| BLK/YEL | | -22-0-4 | | | | | |
| BLACK | 22 | 22-0 | | | | | |
| GRN/BLU | 20 | -20-5-6 | | | | | |
| GRN/RED | | -20-5-2 | | | | | |
| GRN/YEL | | -20-5-4 | | | | | |
| GREEN | 20 | -20-5 | | | | | |
| BLUE | 22 | -22-6 | | | | | |
| BLU/RED | | 22-6-2 | | | | | |
| TAN/RED | | -22-10-2 | | | | | |
| BLU/YEL | | -22-6-4 | | | | | |
| TAN/YEL | | -22-10-4 | | | | | |
| BLU/GRN | | -22-6-5 | | | | | |
| TAN/BLU | | -22-10-6 | | | S-1370-1 | | |
| BLACK | 22 | -22-0 | | SOLDER | S-1367-1-8 | 1270624 | |

3 WIRE TABLE

| | | |
|---|---|---|
| 6 | 8825K6 | SWITCH (CUT) |
| 5 | 5 OHM, 5 WATT WIRE LEAD | RESISTOR (OM) |
| 4 | 8316K3 | SWITCH (CUT) |
| 3 | | |
| 2 | 1205-GC12 | RELAY (GN) |
| 1 | 5A-018 | ROTARY SWITCH (IN) |

CESSNA AIRCRAFT CO., COMMERCIAL AIRCRAFT DIVISION, WICHITA, KANSAS

| | NAME | DATE |
|---|---|---|
| DRAWN | G WOOD | 1-3-64 |
| GROUP | | 1-3-64 |
| CHECK | | 1-4-64 |
| PROJ | | 1-7-64 |

TITLE: WIRING DIAGRAM — TRANSMITTER & AUDIO SELECTOR SWITCHES (FLOATPLANE) (PRT)

Cessna.

DWG NO 1270625

(SR 4058-9)
(SR 3585-9)

| LET | REVISION | DATE | APPD |
|---|---|---|---|
| A | BY REVISION: TITLE WAS "ARC TYPE R-502B MARKER BEACON RECEIVER (OPT)" S-382-1 WAS S-382-2 WIRE CONNECTIONS CHANGED ON S-382-1 & S-392-1 SER 205-0481, & SER 206-0001, & ON | GLW 8-30-63 | ARS TM NAC |
| B | BY REVISION: PINS 1 & 2 ON MKR BCN LIGHTS HAVE BEEN REVERSED | GLW 10-1-63 | ARS TM |
| C | BY REVISION: ADD 1K OHM RESISTOR & 470 OHM RESISTOR. ADD BLK/BLU WIRE TO SHIPS GROUND. | GLW 1-24-64 | HLW TM RES NAP |

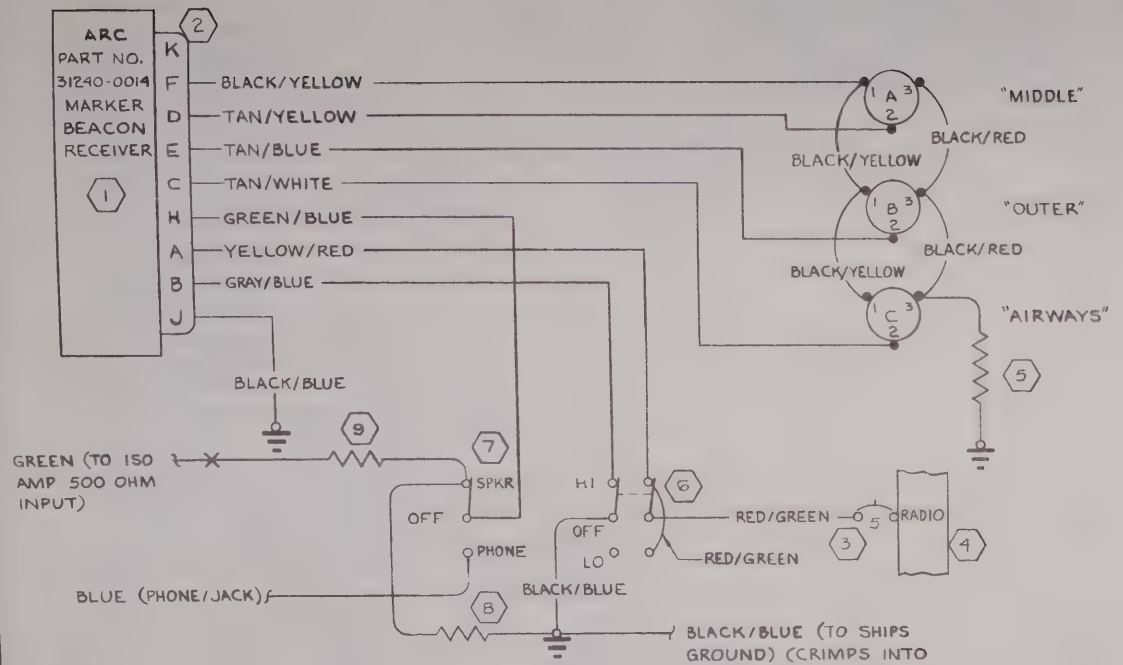


NOTE:

1. WIRE COLOR CODE DESIGNATION AS FOLLOWS: BASE COLOR/ STRIPE

| TEM NO | PART NO. | DESCRIPTION | INSTALLED ON |
|---|---|---|---|
| 9 | 1K Ω, ½ WATT | RESISTOR (OM) | |
| 8 | 470 Ω, ½ WATT | RESISTOR (OM) | |
| 7 | S-382-1 | SWITCH | |
| 6 | S-392-1 | SWITCH | |
| 5 | 40 Ω 3WATT | RESISTOR (OM) | |
| 4 | 1270461-1 | BUS BAR | |
| 3 | S-1360-5 | CIRCUIT BREAKER | |
| 2 | 28371-009 | PLUG (ARC) | |
| 1 | 31240-0014 | MARKER BCN RCVR | (ARC) |

EQUIPMENT TABLE

| WIRE CODE NO | GA | MATERIAL | LG | TERMINALS | | N/A | SERIALS |
|---|---|---|---|---|---|---|---|
| YEL/RED | 20 | S-1460-20-4-2 | | SOLDER | S-1367-1-6 | 0770692 | |
| BLACK/BLU | 22 | S-1460-22-0-6 | | SOLDER | S-1367-1-8 | | |
| GRAY. BLU | 22 | S-1460-22-8-6 | | S-1367-1-6 | SOLDER | | |
| GREEN/BLU | 20 | S-1460-20-5-6 | | S-1367-1-6 | SOLDER | | |
| TAN/WHT | 22 | S-1460-22-10-9 | | SOLDER | SOLDER | | |
| TAN/BLUE | 22 | S-1460-22-10-6 | | SOLDER | SOLDER | | |
| BLACK/YEL | 22 | S-1460-22-0-4 | | SOLDER | SOLDER | | |
| TAN/YEL. | 22 | S-1460-22-10-4 | | SOLDER | SOLDER | | |
| RED/GREEN | 20 | S-1460-20-2-5 | | S-1367-1-6 | S-1367-1-6 | | |
| GREEN | 20 | S-1460-20-5 | | S-1367-1-6 | | | |
| BLUE | 22 | S-1460-22-6 | | S-1367-1-6 | | 0770692 | |

WIRE TABLE

CESSNA AIRCRAFT CO. COMMERCIAL AIRCRAFT DIVISION WICHITA, KANSAS

| | NAME | DATE |
|---|---|---|
| DRAWN | G WOOD | 4-22-63 |
| GROUP | [illegible] | 5-10-63 |
| CHECK | R. Black | 5-13-63 |
| PROJ | H. McBride | 5-13-63 |

TITLE: WIRING DIAGRAM — CESSNA MARKER BEACON 300 (OPT) (ARC TYPE 502B)

Cessna.

DWG NO 1270625

| SUPERSEDED BY | SUPERSEDES | MODEL | REV | PAGE |
|---|---|---|---|---|
| | | 205, 206 | C | 17.22 |

FORM NO. 80-161

(SR4233)

| CHG LET | REVISION | BY / DATE | CHK / APPD |
|---|---|---|---|
| | | | |

NOTE:

1. COLOR CODE DESIGNATION AS FOLLOWS: BASE COLOR/STRIPE.
2. MACHINE STAMP CIRCUIT FUNCTION ON THESE WIRES.
3. DEV+, DEV- & JUMPER FROM PIN J TO PIN M ARE REQD FOR NAV-O-MATIC 300 AUTOPILOT.
4. WIRE "AUX AUD" TO BE INSULATED ON FREE END WITH VINYL SLEEVING & TIED IN CABLE ASSY UNTIL A RADIO COMBINATION REQUIRES ITS USE.
5. IDENTICAL 16 PIN CONNECTORS ARE PART OF NARCO CONNECTOR KIT EL-2052. KIT EL-2052 NOT SUPPLIED WITH MARK-12 INSTL
6. NARCO PLUG NO. K-4111G-1 SUPPLIED WITH MK12 INSTL KIT.
7. MS3106A-20-27S PLUG & MS3057-12 CLAMP SUPPLIED WITH VOA-4 OR VOA-5 INDICATOR.

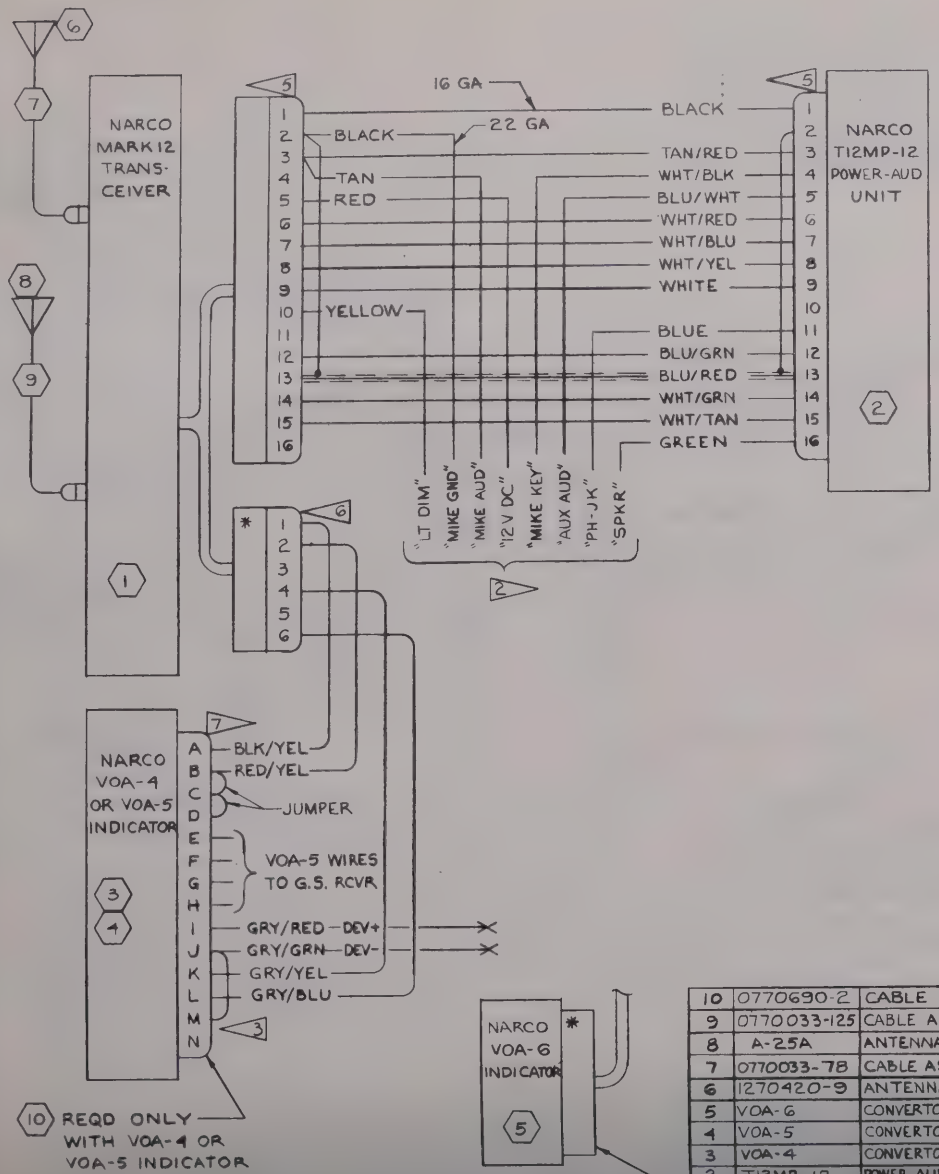


| WIRE CODE NO. | GA | MATERIAL | LG | TERMINALS | | SERIALS |
|---|---|---|---|---|---|---|
| GREEN | 20 | S-1460-20-5 | | SOLDER | | 0770690 |
| GRY/BLU | 22 | S-1460-22-8-6 | | SOLDER | SOLDER | |
| GRY/YEL | 22 | S-1460-22-8-4 | | SOLDER | SOLDER | |
| GRY/GRN | 22 | S-1460-22-8-5 | | SOLDER | S-1370-0 | |
| GRY/RED | 22 | S-1460-22-8-2 | | SOLDER | S-1370-0 | |
| RED/YEL | 22 | S-1460-22-2-4 | | SOLDER | SOLDER | |
| BLK/YEL | 22 | S-1460-22-0-4 | | SOLDER | SOLDER | |
| BLACK | 22 | S-1460-22-0 | | SOLDER | | |
| TAN | 22 | S-1460-10 | | SOLDER | | |
| WHT/TAN | 22 | S-1460-22-9-10 | | SOLDER | SOLDER | |
| WHT/GRN | 22 | S-1460-22-9-5 | | SOLDER | SOLDER | |
| BLU/RED | 22S | S-1461-22-6-2 | | SOLDER | SOLDER | |
| BLU/GRN | 22 | S-1460-22-6-5 | | SOLDER | SOLDER | |
| BLUE | 22 | S-1460-22-6 | | SOLDER | | |
| WHT/YEL | 22 | S-1460-22-9-4 | | SOLDER | SOLDER | |
| WHT/BLU | 22 | S-1460-22-9-6 | | SOLDER | SOLDER | |
| WHT/RED | 22 | S-1460-22-9-2 | | SOLDER | SOLDER | |
| BLU/WHT | 22 | S-1460-22-6-9 | | SOLDER | | |
| WHT/BLK | 22 | S-1460-22-9-0 | | SOLDER | | |
| TAN/RED | 22 | S-1460-22-10-2 | | SOLDER | SOLDER | |
| | | | | | | |
| YELLOW | 18 | S-1460-18-4 | | SOLDER | | |
| RED | 16 | S-1460-16-2 | | SOLDER | | |
| BLACK | 16 | S-1460-16-0 | | SOLDER | SOLDER | |
| WHITE | 14 | | | SOLDER | SOLDER | 0770690 |

WIRE TABLE

| | PART NO. | DESCRIPTION | INSTALLED ON |
|---|---|---|---|
| 10 | 0770690-2 | CABLE ASSY | |
| 9 | 0770033-125 | CABLE ASSY-COMM | |
| 8 | A-25A | ANTENNA INSTL (ARC) | |
| 7 | 0770033-78 | CABLE ASSY-OMNI | |
| 6 | 1270420-9 | ANTENNA INSTL | |
| 5 | VOA-6 | CONVERTOR-IND (NARO) | |
| 4 | VOA-5 | CONVERTOR-IND (NARO) | |
| 3 | VOA-4 | CONVERTOR-IND (NARO) | |
| 2 | T12MP-12 | POWER-AUDIO UNIT (NARO) | |
| 1 | MARK-12 | TRANSCEIVER (NARO) | |

CESSNA AIRCRAFT CO COMMERCIAL AIRCRAFT DIVISION WICHITA, KANSAS

| | NAME | DATE |
|---|---|---|
| DRAWN | G WOOD | 4-26-63 |
| GROUP | | 5-10-63 |
| CHECK | | 5-13-63 |
| PROJ | | 5-17-63 |

TITLE: WIRING DIAGRAM — NARCO MARK-12 WITH VOA-4, VOA-5 OR VOA-6 (OPT)

Cessna.

DWG NO. 1270625

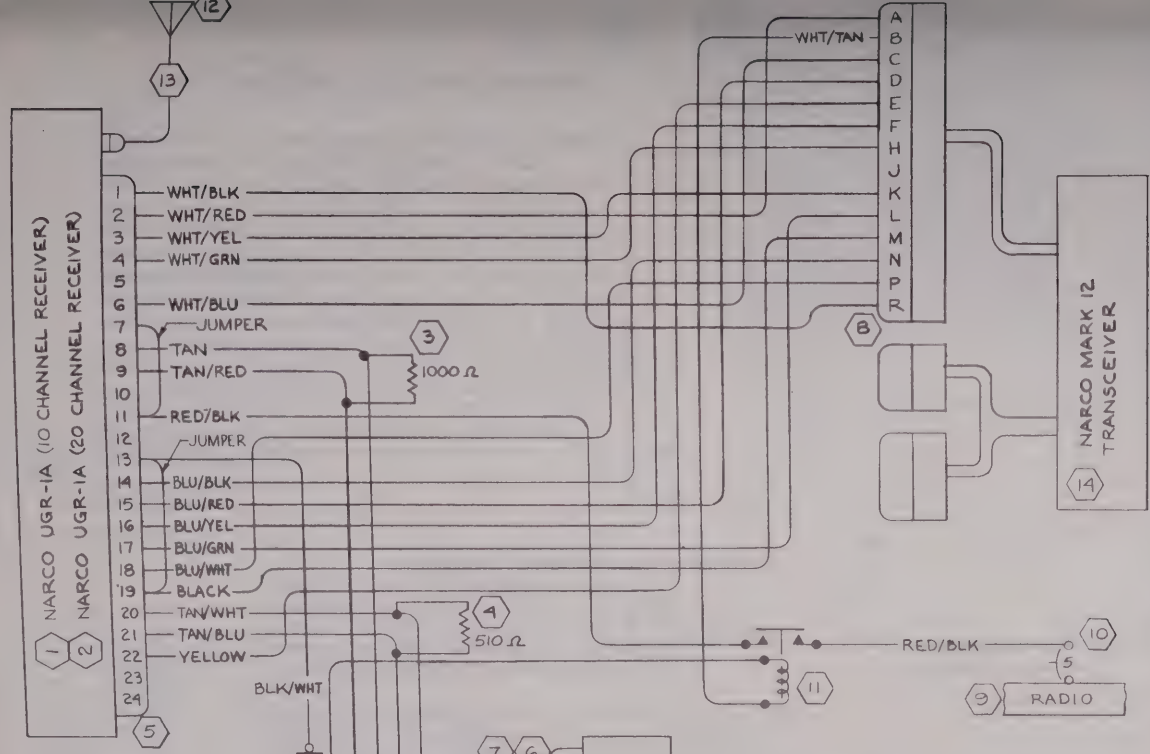


| LET | REVISION | DATE | APPD |
|---|---|---|---|
| | | | |

| ITEM NO | PART NO | DESCRIPTION | INSTALLED ON |
|---|---|---|---|
| 17 | K-41271-1 | CONNECTOR (NARO) | |
| 16 | T12MP-12 | POWER UNIT (NARO) | |
| 15 | VOA-5 | CONVERT.-IND (NARO) | |
| 14 | MARK 12 | TRANSCEIVER (NARO) | |
| 13 | 0770033-98 | RF CABLE ASSY | |
| 12 | 1270420-7 | GLIDESLOPE ANT INSTL | |
| 11 | 0770668-1 | RELAY COVER ASSY | |
| 10 | 5-1360-5 | CIRCUIT BREAKER | |
| 9 | 1270461-1 | BUS BAR | |
| 8 | 41247-102 | CONNECTOR (NARO) | |
| 7 | 41228-6 | CLAMP (NARO) | |
| 6 | 41223-2 | PLUG (NARO) | |
| 5 | 41246-1 | CONN ASSY (NARO) | |
| 4 | 510Ω ±5% ½ WATT | RESISTOR (OM) "LITTLE DEVIL" | |
| 3 | 1000Ω ±10% ½ WATT | RESISTOR (OM) "LITTLE DEVIL" | |
| 2 | UGR-1A 20 CH | RECEIVER (NARO) | |
| 1 | UGR 1A 10 CH | RECEIVER (NARO) | |

EQUIPMENT TABLE

| WIRE CODE NO | GA | MATERIAL | LG | TERMINALS | | N/A | SERIALS |
|---|---|---|---|---|---|---|---|
| TAN/BLU | 22 | S-1460-22-10-6 | | SOLDER | SOLDER | 1270648 | |
| TAN/WHT | 22 | S-1460-22-10-9 | | | | | |
| BLACK | 22 | S-1460-22-0 | | | | | |
| BLU/WHT | 22 | S-1460-22-6-9 | | | | | |
| BLU/GRN | 22 | S-1460-22-6-5 | | | | | |
| BLU/YEL | 22 | S-1460-22-6-4 | | | | | |
| BLU/RED | 22 | S-1460-22-6-2 | | | | | |
| BLU/BLK | 22 | S-1460-22-6-0 | | | | | |
| TAN/RED | 22 | S-1460-22-10-2 | | | | | |
| TAN | 22 | S-1460-22-10 | | | | | |
| WHT/BLU | 22 | S-1460-22-9-6 | | | | | |
| WHT/GRN | 22 | S-1460-22-9-5 | | | | | |
| WHT/YEL | 22 | S-1460-22-9-4 | | | | | |
| WHT/RED | 22 | S-1460-22-9-2 | | | | | |
| WHT/BLK | 22 | S-1460-22-9-0 | | | | | |
| WHT/TAN | 22 | S-1460-22-9-10 | | | | | |
| RED/BLK | 18 | S-1460-18-2-0 | | | | | |
| RED/WHT | 18 | S-1460-18-2-9 | | | | | |
| YELLOW | 18 | S-1460-18-4 | | | SOLDER | | |
| BLK/WHT | 18 | S-1460-18-0-9 | | | S-1367-1-8 | | |
| RED/BLK | 18 | S-1460-18-2-0 | | SOLDER | S-1367-1-6 | 1270648 | |

WIRE TABLE

CESSNA AIRCRAFT CO., COMMERCIAL AIRCRAFT DIVISION, WICHITA, KANSAS

| | NAME | DATE |
|---|---|---|
| DRAWN | G WOOD | 5 14 63 |
| GROUP | [illegible] | 7-6-63 |
| CHECK | R. Slunk | 7-1-63 |
| PROJ | N. McCabe | 7-5-63 |

TITLE: WIRING DIAGRAM — NARCO UGR-1A GLIDESLOPE WITH NARCO MARK 12 & VOA-5 (OPT)

Cessna.

DWG NO 1270625

| SUPERSEDED BY | SUPERSEDES 1270625 PAGES 17.16 & 1716.1 | MODEL 205 & 206 | REV | PAGE 17.24 |
|---|---|---|---|---|

FORM NO. 80-161

(SR4038-11)(SR3983-11)

| CHG LET | REVISION | BY / DATE | CHK / APPD |
|---|---|---|---|
| | | | |

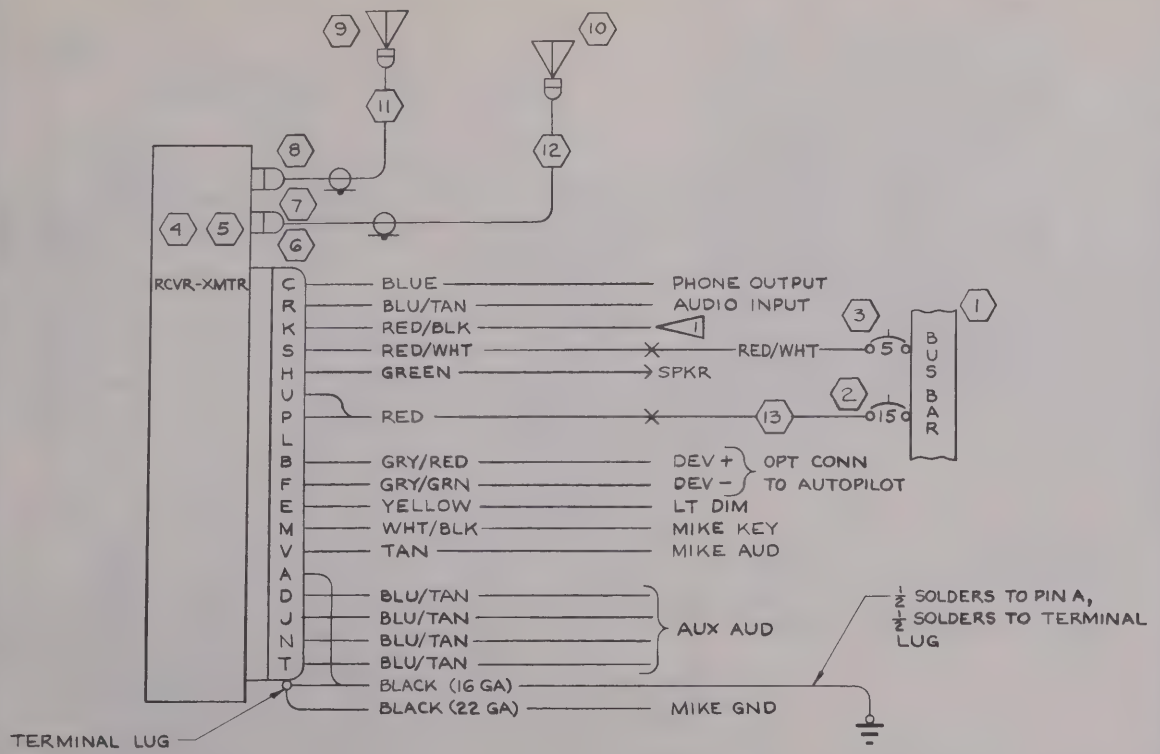


NOTES:

1. ON SINGLE CESSNA NAV/COM 300 INSTL, RED/BLK WIRE (PIN K) IS CONNECTED TO RED/WHT WIRE (PIN S) WITH AN S-1370-1 SPLICE, AND BLUE WIRE (PIN C) IS CONNECTED TO BLU/TAN WIRE (PIN R) WITH AN S-1370-1 SPLICE. WHEN THE NAV/COM 300 IS INSTALLED WITH OTHER RADIO UNITS, RED/WHT WIRE CONNECTS TO CKT BKR AS SHOWN & RED/BLK WIRE IS CUT OFF AT CONNECTOR; BLUE WIRE CONNECTS TO WIPER OF A SPKR-PHONE SWITCH & BLU/TAN WIRE CONNECTS TO SPKR TERMINAL OF SPKR-PHONE SWITCH.
2. WIRES NOT USED TO BE COVERED WITH VINYL SLEEVING & TIED INTO CABLE ASSY.
3. FOR DUAL 514A INSTALLATION, REF 1270625 PAGE 17.25.1.

(SEE PAGE 17.25.1 FOR CONTINUATION OF NOTES)

| ITEM | PART NO. | DESCRIPTION | INSTALLED ON |
|---|---|---|---|
| 13 | RED | WIRE | |
| 12 | 0770033-129 | RF CABLE ASSY | |
| 11 | 0770033-127 | RF CABLE ASSY | |
| 10 | 1270420-9 | OMNI ANT. INSTL | |
| 9 | 1270420-13 | ANTENNA (ARC) | |
| 8 | 29752 | CONNECTOR (ARC) | |
| 7 | 29753 | CONNECTOR (ARC) | |
| 6 | 29747-0018 | CONNECTOR (ARC) | |
| 5 | 30410-1114 | RCVR-XMTR (360 CH) | (ARC) |
| 4 | 30410-1014 | RCVR-XMTR (100 CH) | (ARC) |
| 3 | S-1360-5 | CIRCUIT BREAKER | |
| 2 | S-1360-15 | CIRCUIT BREAKER | |
| 1 | 1270461-1 | BUS BAR | |

| WIRE CODE NO. | GA | MATERIAL | LG | TERMINALS | | N/A | SERIALS |
|---|---|---|---|---|---|---|---|
| RED/WHT | 18 | S-1460-18-2-9 | | S-1370-1 | S-1367-1-6 | 0770694 | |
| BLU/TAN | 22 | S-1460-22-6-10 | | SOLDER | | 0770695 | |
| BLU/TAN | 22 | S-1460-22-6-10 | | | | | |
| BLU/TAN | 22 | S-1460-22-6-10 | | | | | |
| BLACK | 16 | S-1460-16-0 | | | S-1367-2-8 | | |
| WHT/BLK | 22 | S-1460-22-9-0 | | | | | |
| GRY/GRN | 22 | S-1460-22-8-5 | | | | | |
| GRY/RED | 22 | S-1460-22-8-2 | | | | | |
| BLU/TAN | 22 | S-1460-22-6-10 | | | | | |
| BLU/TAN | 22 | S-1460-22-6-10 | | | | | |
| RED/WHT | 18 | S-1460-18-2-9 | | | | | |
| RED/BLK | 18 | S-1460-18-2-0 | | | | | |
| BLACK | 22 | S-1460-22-0 | | | | | |
| TAN | 22 | S-1460-22-10 | | | | | |
| BLUE | 22 | S-1460-22-6 | | | | | |
| RED | 16 | S-1460-16-2 | | | S-1370-2 | | |
| YELLOW | 18 | S-1460-18-4 | | | | | |
| GREEN | 20 | S-1460-20-5 | | SOLDER | S-341-2 | 0770695 | |

WIRE TABLE

CESSNA AIRCRAFT CO. COMMERCIAL AIRCRAFT DIVISION WICHITA KANSAS

| | NAME | DATE |
|---|---|---|
| DRAWN | G WOOD | 8-13-63 |
| GROUP | [signature] | 9-5-63 |
| CHECK | R. Stuck | 8-26-63 |
| PROJ | H. McCarter | 9-5-63 |

TITLE: WIRING DIAGRAM — CESSNA NAV/COM 300 (ARC TYPE 514A)

Cessna.

DWG NO: 1270625

REV. PAGE:

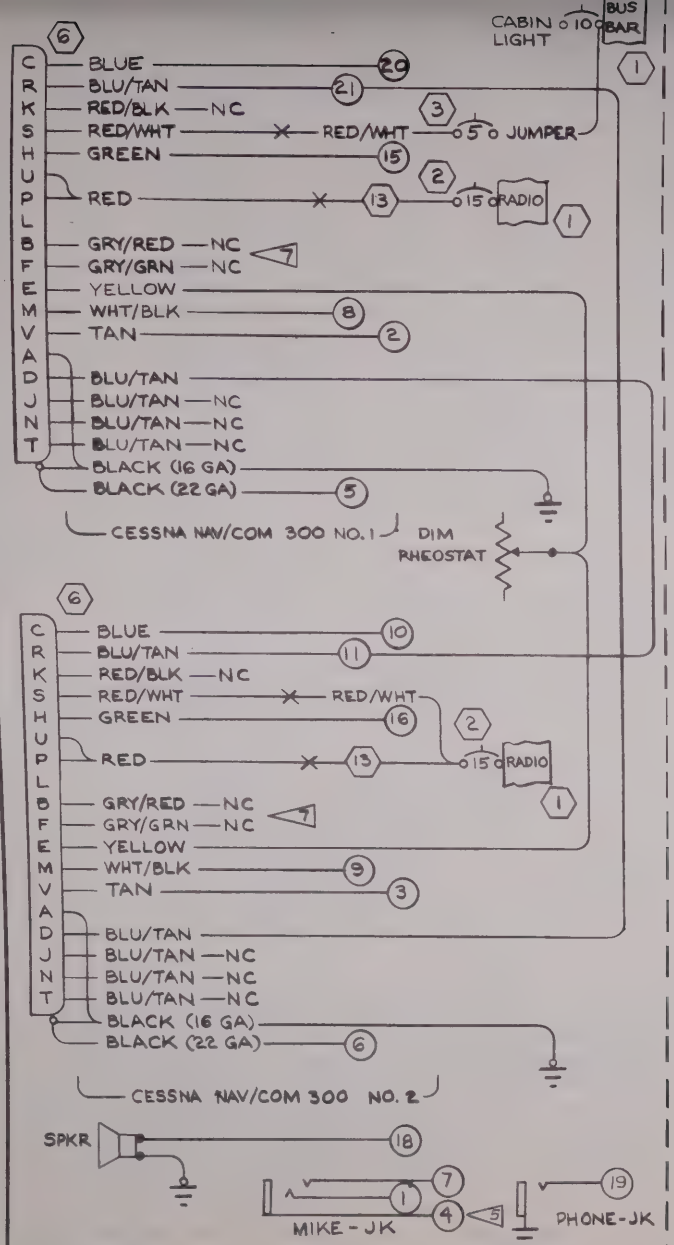


TYPICAL INTERCONNECTION OF DUAL CESSNA NAV/COM 300 SYSTEMS 4

NOTES CONTINUED:

(SR 4038-11) (SR 3983-11)

4. CIRCLED NUMBERS "◯" REFER TO TERMINALS ON TRANSMITTER AND AUDIO SELECTOR SWITCH ASSY (REF 1270625, PAGE 17.21)
5. MIKE JACK IS GROUNDED AT RCVR-XMTR UNITS SO ON DUAL INSTALLATIONS MUTING RELAY WILL FUNCTION ONLY WHEN XMTR SEL SWITCH IS CORRECTLY POSITIONED. I.E. WHEN XMTR #2 IS SELECTED & THERE IS NO 2ND XMTR INSTALLED, AUDIO MUTING WILL NOT OCCUR.
6. CESSNA NAV/COM 300 AMPLIFIERS ARE "ALWAYS HOT". SPEAKER OUTPUTS FROM EACH SYSTEM DRIVE EITHER A 5 OHM, 10 WATT DUMMY LOAD OR THE SHIP'S SPEAKER AS DETERMINED BY THE TRANSMITTER SELECTED (REF 1270625, PAGE 17.21)
7. WHEN AN OPTIONAL NAV-O-MATIC AUTOPILOT WITH OMNI COUPLER IS COMBINED WITH A CESSNA NAV/COM 300, THE GRY/RED WIRE CONNECTS TO DEV+ CIRCUIT & THE GRY/GRN WIRE CONNECTS TO DEV- CIRCUIT.

| LTR LET | REVISION | DATE | APPD |
|---|---|---|---|
| | | | |

| ITEM NO. | PART NO. | DESCRIPTION | INSTALLED ON |
|---|---|---|---|
| | | | |

EQUIPMENT TABLE

| WIRE CODE NO. | GA | MATERIAL | LG | TERMINALS | | SERIALS |
|---|---|---|---|---|---|---|
| | | | | | | |

WIRE TABLE

CESSNA AIRCRAFT CO. COMMERCIAL AIRCRAFT DIVISION WICHITA KANSAS

| | NAME | DATE |
|---|---|---|
| DRAWN | G WOOD | 8-27-63 |
| GROUP | Ted Woody | 9-5-63 |
| CHECK | R. Sluder | 9-4-63 |
| PROJ | W. McCarter | 9-5-63 |

TITLE: WIRING DIAGRAM — CESSNA NAV/COM 300 (ARC TYPE 514A)

Cessna.

DWG NO: 1270625

| SUPERSEDED BY | SUPERSEDES | MODEL | REV. | PAGE |
|---|---|---|---|---|
| | | 205, 206 | | 17.25.1 |

FORM NO. 80-161

(SR4338)

| CHG LET | REVISION | BY DATE | CHK APPD |
|---|---|---|---|
| | | | |

NOTES:

1. GRY/RED WIRE IS "DEV +" CIRCUIT & GRY/GRN WIRE IS "DEV-" CIRCUIT FOR CONNECTION TO A VOR INDICATOR.
2. CONNECTORS REQUIRED FOR FABRICATING A COMPLETE SET OF INTERCONNECTING CABLES ARE INCLUDED IN ARC CONNECTOR KIT NO. 31682.
3. WING CABLE ASSY AND DIRECTIONAL GYRO CABLE ARE FOR REFERENCE ONLY THESE CABLES ARE IDENTICAL IN LENGTH AND COLOR CODING TO CABLES USED ON NAV-O-MATIC 300 INSTL. 1270449-2 CABLE ASSY REQUIRED ON MODEL 205 & 1270449-6 REQUIRED ON MODEL 206.

| PART NO | DESCRIPTION | INSTALLED ON |
|---|---|---|
| 22 | 1270449-2 CABLE ASSY | <3 |
| 21 | 1270449-4 CABLE ASSY | |
| 20 | 1270449-6 CABLE ASSY | <3 |
| 19 | 1270461-1 BUS BAR | |
| 18 | RED WIRE | |
| 17 | S-1360-10 CIRCUIT BREAKER | |
| 16 | R-12½-75-RS34 RHEOSTAT (TRTA) | |
| 15 | YELLOW WIRE | |
| 14 | 28371-0009 CONNECTOR (ARC | <2 |
| 13 | 28505-0009 CONNECTOR (ARC) | |
| 12 | 28326-0009 CONNECTOR (ARC) | |
| 11 | 28326-0007 CONNECTOR (ARC) | |
| 10 | 28326-0006 CONNECTOR (ARC) | |
| 9 | 28371-0005 CONNECTOR (ARC) | |
| 8 | 28371-0007 CONNECTOR (ARC) | |
| 7 | 31683-0020 CONNECTOR ASSY (ARC) | <2 |
| 6 | 30370-0100 DIRECTIONAL GYRO | (ARC G-520A) |
| 5 | 26360-0000 ROLL ACTUATOR | (ARC PA-510A) |
| 4 | 26360 0000 PITCH ACTUATOR | (ARC PA-510A) |
| 3 | 30975-0000 VERTICAL GYRO | (ARC G-519A) |
| 2 | 30520-0019 COMPUTER (ARC) | (CA-520A) |
| 1 | 30510-1019 CONTROL UNIT (ARC) | (C-520A) |

| WIRE CODE NO. | GA | MATERIAL | LG | TERMINALS | | N/A | SERIALS |
|---|---|---|---|---|---|---|---|
| GRN/YEL | 20 | S-1460-20-5-4 | | SOLDER | S-1367-1-B | 0770704 | |
| WHT/BLK | 22 | S-1460-22-9-0 | | | SOLDER | | |
| RED/BLK | 18 | S-1460-18-2-0 | | | | | |
| WHT/RED | 22 | S-1460-22-9-2 | | | | | |
| BLK/BLU | 22 | S-1460-22-0-6 | | | | | |
| WHT/YEL | 22 | S-1460-22-9-4 | | | | | |
| WHT/GRN | 22 | S-1460-22-9-5 | | | | | |
| WHT/BLU | 22 | S-1460-22-9-6 | | | | | |
| WHT/TAN | 22 | S-1460-22-9-10 | | | | | |
| RED/BLK | 18 | S-1460-18-2-0 | | | | | |
| WHT/RED | 22 | S-1460-22-9-2 | | | | | |
| WHT/BLU | 22 | S-1460-22-9-6 | | | | | |
| WHT/TAN | 22 | S-1460-22-9-10 | | | | | |
| WHT/YEL | 22 | S-1460-22-9-4 | | | | | |
| WHT/GRN | 22 | S-1460-22-9-5 | | SOLDER | SOLDER | 0770704 | |
| TAN/WHT | 22 | S-1460-22-10-9 | | SOLDER | SOLDER | 0770704 | |
| TAN/BLU | 22 | S-1460-22-10-6 | | | | | |
| TAN/YEL | 22 | S-1460-22-10-4 | | | | | |
| TAN/RED | 22 | S-1460-22-10-2 | | | SOLDER | | |
| YELLOW | 18 | S-1460-18-4 | | | S-1370-1 | | |
| RED | 16 | S-1460-16-2 | | | S-1370-2 | | |
| WHT/RED | 22 | S-1460-22-9-2 | | | SOLDER | | |
| BLU/TAN | 22 | S-1460-22-6-10 | | | | | |
| RED/WHT | 18 | S-1460-18-2-9 | | | | | |
| WHT/BLK | 22 | S-1460-22-9-0 | | | SOLDER | | |
| GRY/GRN | 22 | S-1460-22-8-5 | | | S-1370-1 | | |
| GRY/RED | 22 | S-1460-22-8-2 | | | S-1370-1 | | |
| BLU/WHT | 22 | S-1460-22-6-9 | | | SOLDER | | |
| RED/BLK | 18 | S-1460-18-2-0 | | | | | |
| TAN/WHT | 22 | S-1460-22-10-9 | | | | | |
| BLU/GRN | 22 | S-1460-22-6-5 | | | | | |
| TAN/BLU | 22 | S-1460-22-10-6 | | | | | |
| TAN/RED | 22 | S-1460-22-10-2 | | | | | |
| BLU/YEL | 22 | S-1460-22-6-4 | | | | | |
| TAN/YEL | 22 | S-1460-22-10-4 | | | | | |
| BLU/RED | 22 | S-1460-22-6-2 | | | | | |
| BLU/BLK | 22 | S-1460-22-6-0 | | | | | |
| TAN | 22 | S-1460-22-10 | | | | | |
| BLUE | 22 | S-1460-22-6 | | SOLDER | SOLDER | 0770704 | |

WIRE TABLE

CESSNA AIRCRAFT CO COMMERCIAL AIRCRAFT DIVISION WICHITA KANSAS

| | NAME | DATE |
|---|---|---|
| DRAWN | RIDDER | 9-5-63 |
| GROUP | | 9-22-63 |
| CHECK | K. Stuck | 9-18-63 |
| PROJ | N. McCabe | 11-14-63 |

TITLE: WIRING DIAGRAM — NAV-O-MATIC 400 SYSTEM (OPT)

Cessna.

DWG NO 1270625

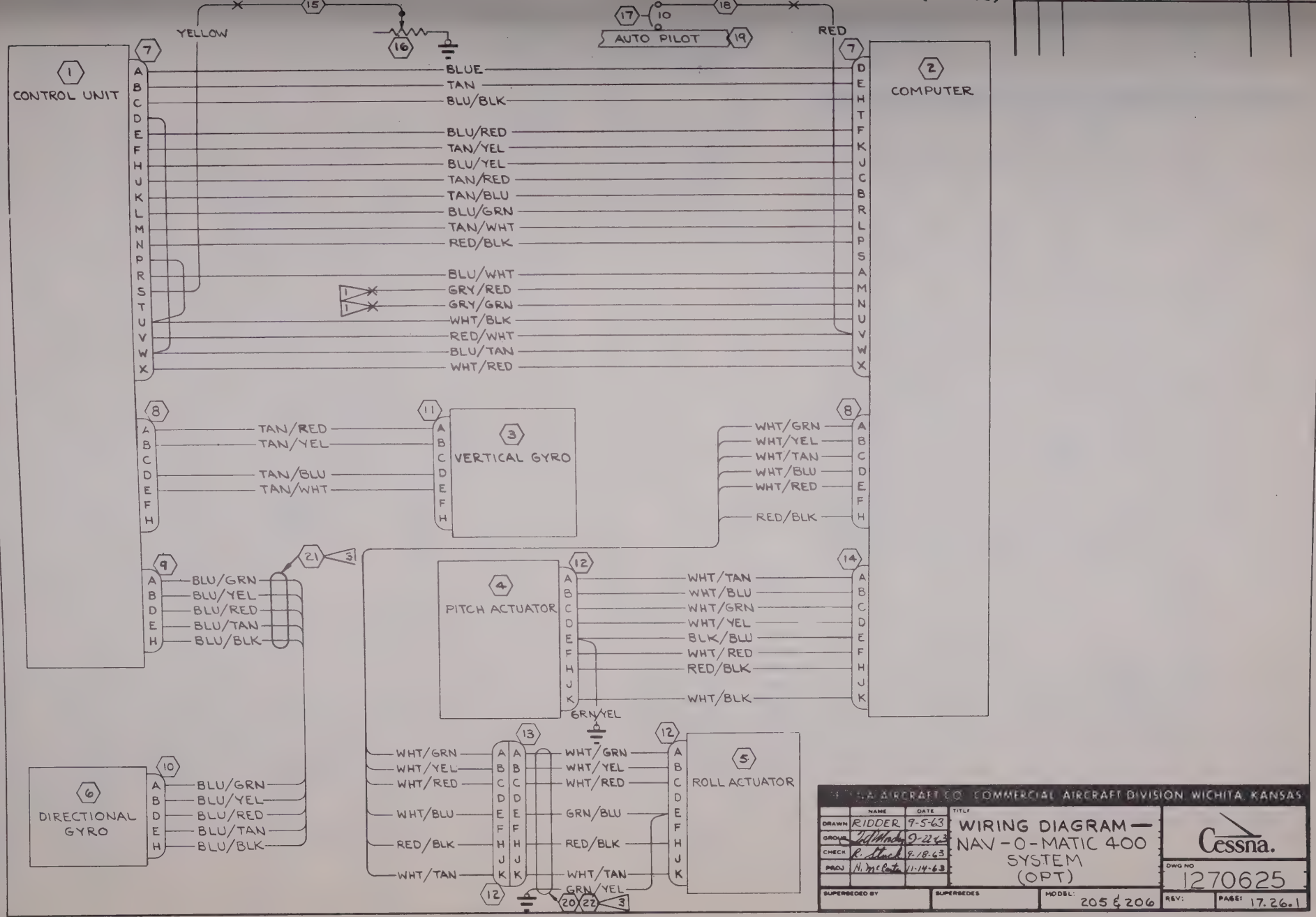


CESSNA AIRCRAFT CO. COMMERCIAL AIRCRAFT DIVISION WICHITA, KANSAS

| | NAME | DATE |
|---|---|---|
| DRAWN | RIDDER | 9-5-63 |
| GROUP | | 9-22-63 |
| CHECK | R. Stuck | 9-18-63 |
| PROJ | N. McCarter | 11-14-63 |

TITLE: WIRING DIAGRAM — NAV-O-MATIC 400 SYSTEM (OPT)

Cessna.

DWG NO 1270625

SUPERSEDED BY

SUPERSEDES

MODEL: 205 & 206

REV:

PAGE: 17.26.1

(SR 4537)

| CHG LET | REVISION | BY / DATE | CHK / APPD |
|---|---|---|---|
| A | BY REV; 32580-1314 WAS-1114; | HJB 8-14-64 | |

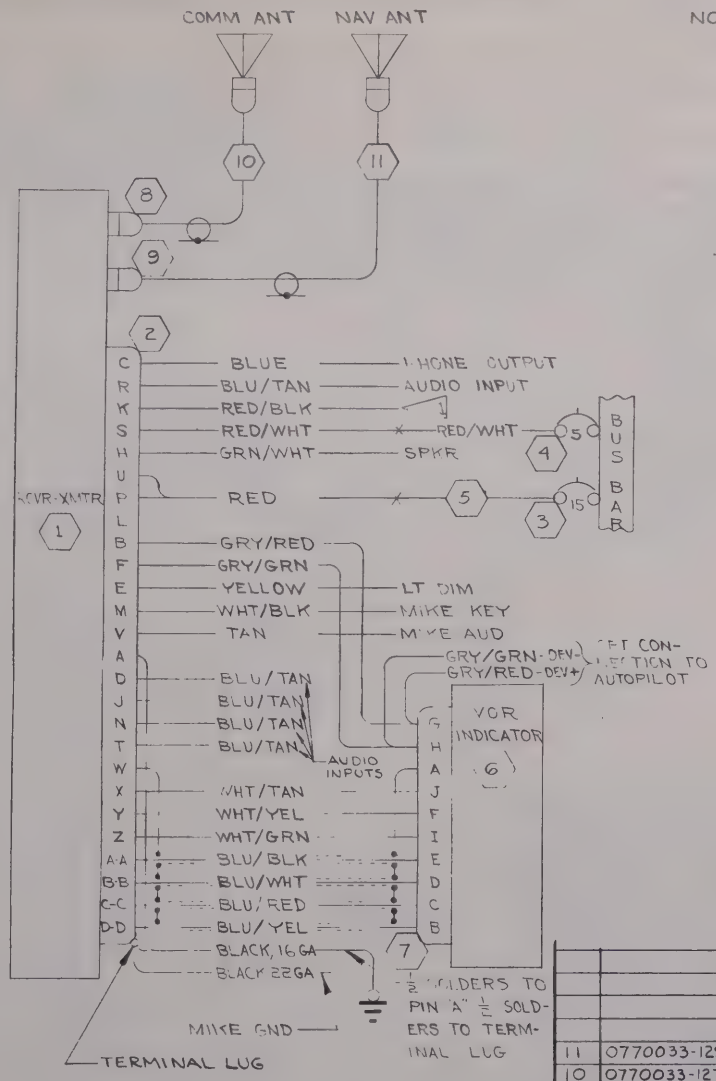


NOTES:

1. ON SINGLE NAV/COM 300R INSTL, RED/BLK WIRE (PIN K) IS CONNECTED TO RED/WHT WIRE (PIN S) WITH AN S-1370-1 SPLICE AND BLUE WIRE (PIN C) IS CONNECTED TO BLU/TAN WIRE (PIN R D, J, N, OR T) WITH AN S-1370-1 SPLICE. WHEN THE NAV/COM 300R IS INSTALLED WITH OTHER RADIO UNITS, RED/WHT WIRE CONNECTS TO CKT BKR AS SHOWN & RED/BLK WIRE IS CUT OFF AT CONNECTOR; BLUE WIRE CONNECTS TO WIPER OF A SPKR-PHONE SWITCH & BLU/TAN WIRE CONNECTS TO SPKR TERMINAL OF SPKR-PHONE SWITCH.
2. WIRES NOT USED TO BE COVERED WITH VINYL SLEEVING & TIED INTO CABLE ASSY.
3. FOR DUAL 514R INSTALLATION, REF 1270625 PAGE 17.27.1.
4. WIRE MATERIAL PER S-1460 EXCEPT SHIELDED WIRES PER S-1461.

INACTIVE SER P206-0001 & ON & SER 205-0577 HJB 8-14-64 RRS

| WIRE CODE NO | GA | MATERIAL | LG | TERMINALS | | N/A | SERIALS |
|---|---|---|---|---|---|---|---|
| RED/WHT | 18 | -18-2-9 | | S-1367-1-6 | | 0770716 | |
| BLU/YEL | 22S | -22-6-4 | | SOLDER | SOLDER | | |
| BLU/RED | 22S | -22-6-2 | | | | | |
| BLU/WHT | 22S | -22-6-9 | | | | | |
| BLU/BLK | 22S | -22-6-0 | | | | | |
| WHT/GRN | 22 | -22-9-5 | | | | | |
| WHT/YEL | 22 | -22-9-4 | | | | | |
| WHT/TAN | 22 | -22-9-10 | | | SOLDER | | |
| BLACK | 16 | -16-0 | | | S-1367-2-8 | | |
| WHT/BLK | 22 | -22-9-0 | | | | | |
| GRY/GRN | 22 | -22-8-5 | | | | | |
| GRY/GRN | 22 | -22-8-5 | | | SOLDER | | |
| GRY/RED | 22 | -22-8-2 | | | | | |
| GRY/RED | 22 | -22-8-2 | | | SOLDER | | |
| BLU/TAN | 22 | -22-6-10 | | | | | |
| BLU/TAN | 22 | -22-6-10 | | | | | |
| BLU/TAN | 22 | -22-6-10 | | | | | |
| BLU/TAN | 22 | -22-6-10 | | | | | |
| BLU/TAN | 22 | -22-6-10 | | | | | |
| RED/WHT | 18 | -18-2-9 | | | S-1370-1 | | |
| RED/BLK | 18 | -18-2-0 | | | | | |
| BLACK | 22 | -22-0 | | | | | |
| TAN | 22 | -22-10 | | | | | |
| BLUE | 22 | -22-6 | | | | | |
| RED | 16 | -16-2 | | | S-1370-2 | | |
| YELLOW | 18 | -18-4 | | | | | |
| GRN/WHT | 20 | -20-5-9 | | SOLDER | | 0770716 | |

4 WIRE TABLE

| | | | |
|---|---|---|---|
| 11 | 0770033-129 | RF CABLE ASSY | |
| 10 | 0770033-127 | RF CABLE ASSY | |
| 9 | 29752 | CONNECTOR (ARC) | |
| 8 | 29753 | CONNECTOR (ARC) | |
| 7 | 32604 | CONNECTOR (ARC) | |
| 6 | 31640 | IN-514R INDICATOR | (ARC) |
| 5 | RED | WIRE | |
| 4 | S-1360-5 | CIRCUIT BREAKER | |
| 3 | S-1360-15 | CIRCUIT BREAKER | |
| 2 | 29747-0026 | CONNECTOR (ARC) | |
| 1 | 32580-1314 | RCVR/XMTR (360 CH) | |

CESSNA AIRCRAFT CO., COMMERCIAL AIRCRAFT DIVISION, WICHITA, KANSAS

| | NAME | DATE |
|---|---|---|
| DRAWN | G WOOD | 3-6-64 |
| GROUP | [signature] | 4-6-64 |
| CHECK | [signature] | 4-3-64 |
| PROJ | [signature] | 4-6-64 |

TITLE: WIRING DIAGRAM — CESSNA NAV/COM 300R (ARC TYPE 514R)

Cessna.

DWG NO. 1270625

# TABLE OF CONTENTS

## 1965 & ON SERIALS
## P206-0001 & ON, U206-0276 & ON, TP206-0161 & ON AND TU206-0438 & ON


| PAGE NO. | TITLE | DATE ISSUED | REV |
|---|---|---|---|
| 0.1 | Radio Audio, Power & Lighting | 6-28-65 | A |
| 3.1.0 | Wiring Diagram-Cessna Nav/Com 300R (ARC Type 514R & 515R) | 6-14-65 | A |
| 3.1.1 | Wiring Diagram-Cessna Nav/Com 300R (ARC Type 514R) | 6-14-65 | A |
| 4.1 | Wiring Diagram - Cessna Marker Beacon 300 (ARC Type 502B) | | |
| 5.1 | Wiring Diagram - Audio Selector Switches | | |
| 5.2 | Wiring Diagram - Omni Switch, Terminal Block & Muting Relay | | |
| 5.3 | Wiring Diagram - XMTR Selector Switch | | |
| 5.4 | Wiring Diagram - Typical Switching-Narco Mark 12 & ADF | 2-1-65 | |
| 5.5 | W.D. -Typical Switching-Partial "A", ISO Amp & ADF; HF Transceiver & Comm 300 | 2-22-65 | |
| 5.6 | W.D. Trans. Selector Switch & Terminal Block | 12-7-65 | |
| 7.1.0 | Wiring Diagram - Cessna Nav/Com 300 (ARC Type 514) | 6-14-65 | Inac. |
| 7.1.1 | Wiring Diagram - Cessna Nav/Com 300 (ARC Type 514A) | 6-14-65 | Inac. |
| 7.2 | Cessna Comm 300 (ARC Type 524A) | 9-8-64 | |
| 8.1 | Wiring Diagram - Cessna Nav/Omni 300 (ARC Type 525A) | 12-7-64 | A |
| 10.1 | Cessna Transceiver 500 (ARC Type 302G) | 8-20-64 | |
| 12 | Cessna ADF 300 (ARC Type 521B) | 10-20-65 | A |
| 13.1.1 | Cessna Nav/Omni 500 (ARC Type 319G) | 9-8-64 | |
| 14.1.1 | Cessna Nav/Comm 500 (ARC Type 317G) | 9-8-64 | |
| 15.1 | Cessna ADF 500 (ARC Type 318G) | 5-22-65 | A Inac. |
| 18.1.2 | Pantronics DX10-D HF Transceiver Inst. | 11-16-64 | |
| 18.1.3 | Pantronics DX10-D HF Trans. Installation | 11-16-64 | |
| 19 | King KA-10 Isolation Amplifier | 12-7-65 | NC Inac |
| 20.1 | Wiring Diagram - King KN-60 DME | 12-7-64 | |
| 21.2 | Wiring Diagram - Pantronics DX10-DA | 4-28-65 | A |
| 21.3 | Wiring Diagram - Pantronics DX10-DA | 11-2-65 | C |
| 21.4 | Wiring Diagram - Pantronics DX10-DA | 11-2-65 | C |
| 24.1 | Wiring Diagram - King KX-150A or KX-150AE | 2-25-65 | A |
| 25.1 | Wiring Diagram - Narco Mark 12 with VOA-4, VOA-5, or VOA-6 | 1-21-65 | |
| 26.1 | Wiring Diagram - Narco UGR-1A Glide Slope with Narco 12 & VOA-5 | 1-11-65 | |
| 27.1 | Wiring Diagram King KY-95E | 2-1-65 | |

# TABLE OF CONTENTS


| PAGE NO. | TITLE | DATE ISSUED | RE |
|---|---|---|---|
| 2.29.1 | Wiring Diagram-Cessna ADF 500 (Goniometer) (ARC Type 318G) | 10-20-65 | A |
| 2.30.1 | W.D. -Marker Beacon Cessna Nav/Omni 300 (ARC Type 525A) | 5-27-65 | |
| 2.31.1.0 | Cessna Nav/Com 300 (ARC Type 516A) | 6-14-65 | |
| 2.31.1.1 | Cessna Nav/Com 300 (ARC Type 516A) | 6-14-65 | |
| 2.32 | W.D. Auxiliary Microphone Jack & Control Wheel Key | 7-12-65 | |
| 2.34.1 | W.D. King KX-160E Nav/Com | 7-27-65 | |
| 2.35 | Wiring Diagram - Bendix ADF-T-12C | 8-30-65 | |
| 2.36.1 | W.D. -King KA-25C Audio Amplifier | 12-7-65 | |
| | DRAWING NUMBER 1270625 | | |
| 17.13 | Nav-O-Matic 200 & 300 (Opt.) | 5-27-63 | A I |
| 17.13.1 | Nav-O-Matic 200 & 300 Systems (Opt.) | 11-17-64 | A |
| 17.26 | Nav-O-Matic 400 System (Opt.) | 11-14-63 | |
| 17.26.1 | Nav-O-Matic 400 System (Opt.) | 11-14-63 | |

NOTE:

1. WIRES TO BE OF SUFFICIENT LENGTH TO ALLOW CONNECTION TO ALL POSSIBLE RADIO COMBINATIONS. TERMINALS TO BE ATTACHED TO WIRES AS REQD BY THE VARIOUS RADIO INSTALLATIONS.
2. WIRE MATERIAL PER S-1460.
3. S-1635-1 PIN & S-1637-1 HOUSING-CAP

| LET. | | DATE | APPD |
|---|---|---|---|
| A | ADDED DETAIL "A" & GREEN WIRE; INACTIVATED GRN, BLK & GRN WIRES (SR4839) | WJR 6-9-65 | RRS/HM |

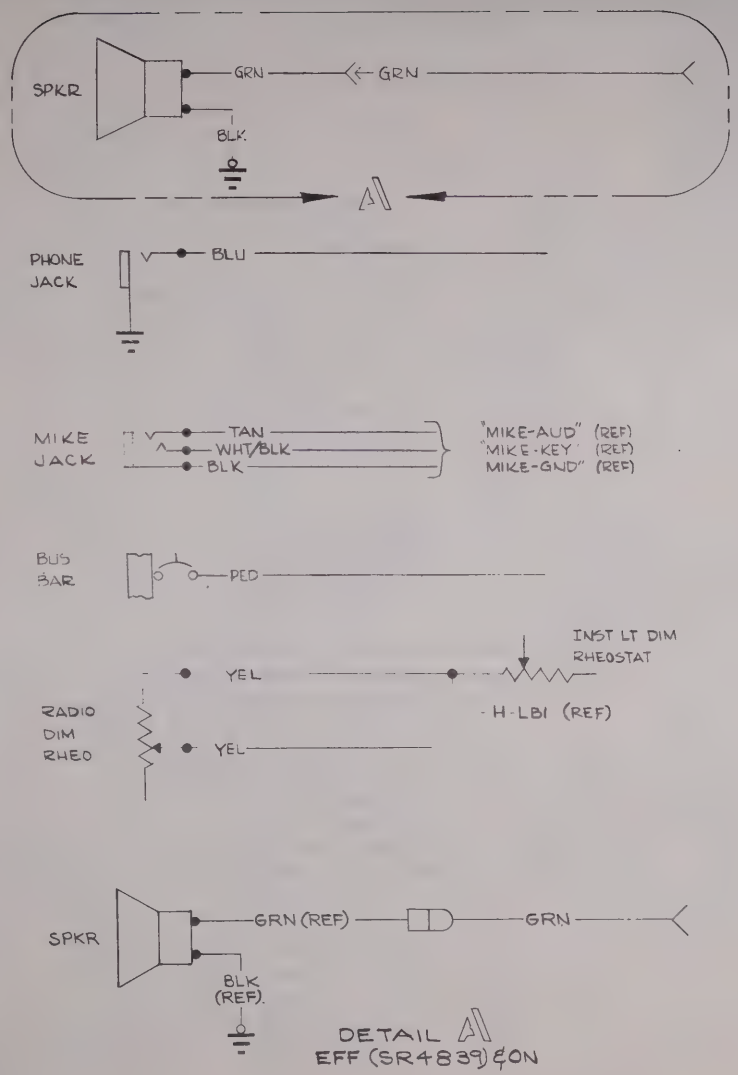


| WIRE CODE NO | GA | MATERIAL | | TERMINALS | | | SERIALS |
|---|---|---|---|---|---|---|---|
| GREEN | 20 | | 118 | S-341-2 | 3 | | (SR4839) & ON |
| BLACK | 22 | -22-0 | 8 | SOLDER | S-1367-1-8 | | INACTIVE (SR4839) & ON |
| GREEN | 20 | -20-5 | 8 | SOLDER | S-341-2 | | INACTIVE (SR4839) & ON |
| RED | 16 | 16-2 | 60 | 1 | S-367-2-6 | | |
| YELLOW | 18 | -18-4 | 60 | 1 | SOLDER | | |
| YELLOW | 18 | -18-4 | | SOLDER | SOLDER | | |
| | | | | | | | |
| BLACK | 22 | -22-0 | | 1 | SOLDER | | |
| WHT/BLK | 22 | -22-9-0 | | 1 | SOLDER | | |
| TAN | 22 | -22-10 | | 1 | SOLDER | | |
| BLUE | 22 | -22-6 | 65 | 1 | SOLDER | | |
| GREEN | 20 | -20-5 | 118 | S-341-2 | S-341-2 | | INACTIVE (SR4839) & ON |

2 WIRE TABLE

CESSNA AIRCRAFT CO., COMMERCIAL AIRCRAFT DIVISION, WICHITA, KANSAS

| | NAME | DATE |
|---|---|---|
| DRAWN | BALES | 7-2-64 |
| GROUP | M | 8 5 64 |
| CHECK | [illegible] | 7-13-64 |
| PROJ | H. McCarter | 8 5 64 |
| | ZEM | |

TITLE: WIRING DIAGRAM — RADIO SPEAKER, 'PHONE JACK, MIKE, LIGHT RHEO. & POWER CIRCUITS

Cessna.

DWG NO 1270675

SUPERSEDED BY | SUPERSEDES | MODEL: P206 & U206 | REV A | PAGE 2.0.1

| ITEM NO | PART NO. | DESCRIPTION | INSTALLED ON |
|---|---|---|---|

EQUIPMENT TABLE

FORM NO 80-161

(SR 4456) (SR 4457)

| CHG LET | REVISION | BY / DATE | CHK / APPD |
|---|---|---|---|
| A | ADD ARC TYPE 515R TO TITLE. IN NOTE 3, 300R WAS 514R (SR 4812) | G L W 6-1-65 | 4/1/65 |

NOTES:

1. ON SINGLE NAV/COM 300 R INSTL, RED/BLK WIRE (PIN K) IS CONNECTED TO RED/WHT WIRE (PIN S) WITH AN S-1370-1 SPLICE AND BLUE WIRE (PIN C) IS CONNECTED TO BLU/TAN WIRE (PIN R, D, J, N, OR T) WITH AN S-1370-1 SPLICE. WHEN THE NAV/COM 300R IS INSTALLED WITH OTHER RADIO UNITS, RED/WHT WIRE CONNECTS TO CKT BKR AS SHOWN & RED/BLK WIRE IS CUT OFF AT CONNECTOR; BLUE WIRE CONNECTS TO WIPER OF A SPKR-PHONE SWITCH & BLU/TAN WIRE CONNECTS TO SPKR TERMINAL OF SPKR-PHONE SWITCH.
2. S-1557-1 CAP REPLACED WITH S-1367-1-8 TERMINAL WHEN COMBINED WITH OTHER RADIOS.
3. FOR DUAL 300R INSTALLATION, REF PAGE 2.3.1.1.
4. WIRE MATERIAL PER S-1460 EXCEPT AS NOTED.

(NOTES CONT. ON 2.3.1.1)

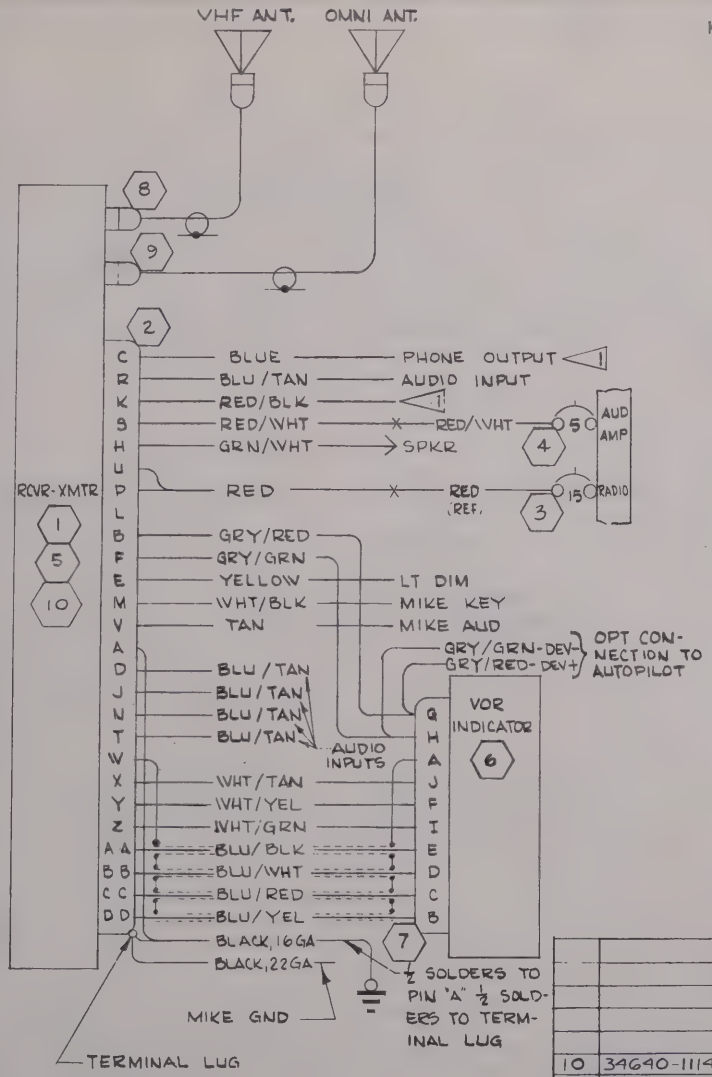


| | | | |
|---|---|---|---|
| 10 | 34640-1114 | RCVR/XMTR (ARC) | |
| 9 | 29752 | CONNECTOR (ARC) | |
| 8 | 29753 | CONNECTOR (ARC) | |
| 7 | 52604 | CONNECTOR (ARC) | |
| 6 | 51640 | INDICATOR | (ARC) |
| 5 | 32850-1614 | RCVR/XMTR 360CH EXP | (ARC) |
| 4 | S-1360-5 | CIRCUIT BREAKER | |
| 3 | S-1360-15 | CIRCUIT BREAKER | |
| 2 | 29747-0026 | CONNECTOR (ARC) | |
| 1 | 32580-1114 | RCVR/XMTR (360 CH) | (ARC) |
| ITEM | PART NO | DESCRIPTION | INSTALLED ON |

| WIRE CODE NO. | GA | MATERIAL | LG | TERMINALS | | | SERIALS |
|---|---|---|---|---|---|---|---|
| RED/WHT | 18 | -18-2-9 | | S-1367-1-6 | | | |
| BLU/YEL | 22S | S-1461-22-6-4 | | SOLDER | SOLDER | | |
| BLU/RED | 22S | S-1461-22-6-2 | | | | | |
| BLU/WHT | 22S | S-1461-22-6-9 | | | | | |
| BLU/BLK | 22S | S-1461-22-6-0 | | | | | |
| WHT/GRN | 22 | -22-9-5 | | | | | |
| WHT/YEL | 22 | -22-9-4 | | | | | |
| WHT/TAN | 22 | -22-9-10 | | | SOLDER | | |
| BLACK | 16 | -16-0 | | | S-1367-2-8 | | |
| WHT/BLK | 22 | -22-9-0 | | | | | |
| GRY/GRN | 22 | -22-8-5 | | | S-1557-1 | | |
| GRY/GRN | 22 | -22-8-5 | | | SOLDER | | |
| GRY/RED | 22 | -22-8-2 | | | S-1557-1 | | |
| GRY/RED | 22 | -22-8-2 | | | SOLDER | | |
| BLU/TAN | 22 | -22-6-10 | | | S-1557-1 | 2 | |
| BLU/TAN | 22 | -22-6-10 | | | | 2 | |
| BLU/TAN | 22 | -22-6-10 | | | | 2 | |
| BLU/TAN | 22 | -22-6-10 | | | | 2 | |
| BLU/TAN | 22 | -22-6-10 | | | S-1557-1 | 2 | |
| RED/WHT | 18 | -18-2-9 | | | S-1370-1 | | |
| RED/BLK | 18 | -18-2-0 | | | | | |
| BLACK | 22 | -22-0 | | | | | |
| TAN | 22 | -22-10 | | | | | |
| BLUE | 22 | -22-6 | | | | | |
| RED | 16 | -16-2 | | | S-1370-2 | | |
| YELLOW | 18 | -18-4 | | | | | |
| GRN/WHT | 20 | -20-5-9 | | SOLDER | S-341-2 | | |

4

WIRE TABLE

CESSNA AIRCRAFT CO. COMMERCIAL AIRCRAFT DIVISION, WICHITA, KANSAS

| | NAME | DATE |
|---|---|---|
| DRAWN | BALES | 7-2-64 |
| GROUP | R.C.M. (REV.) | 8-15-64 |
| CHECK | | |
| PROJ | | |

TITLE: WIRING DIAGRAM — CESSNA NAV/COM 300R (ARC TYPE 515R) (ARC TYPE 514R)

Cessna.

DWG NO. 1270675

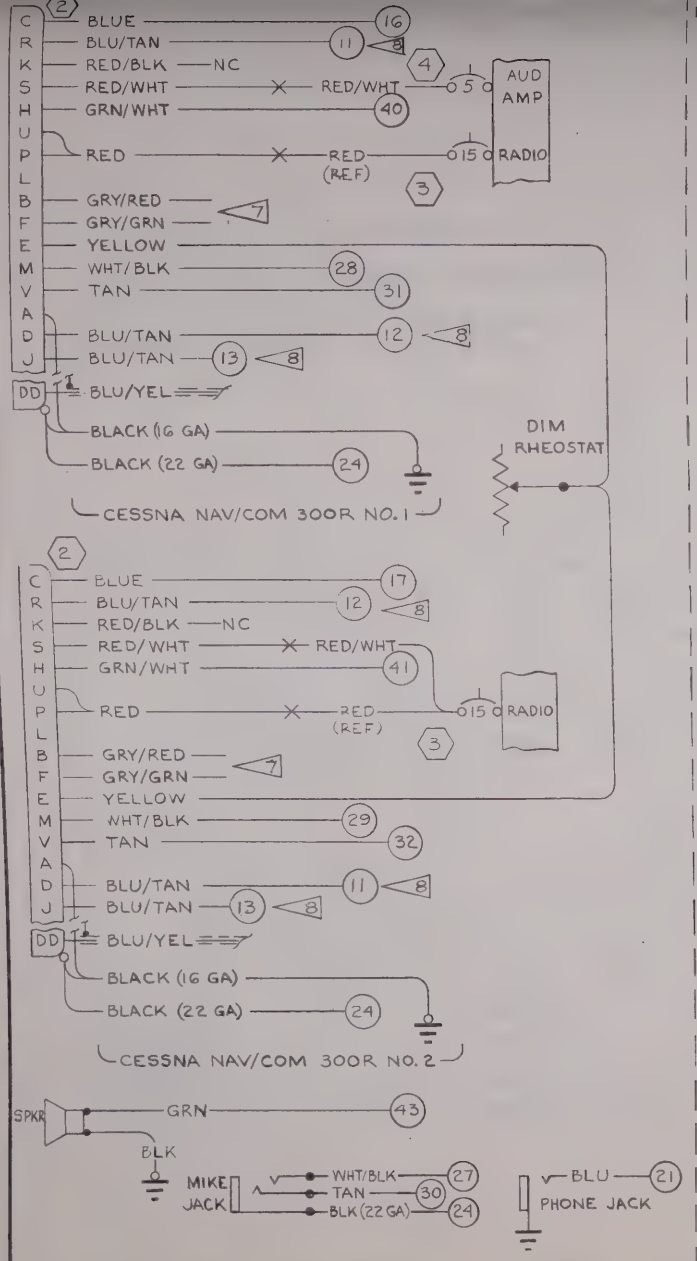


TYPICAL INTERCONNECTION OF DUAL CESSNA NAV/COM 300R SYSTEMS

NOTES CONTINUED:

5. CIRCLED NUMBERS ◯ REFER TO TERMINALS ON TERMINAL BOARD ASSY REF PAGES 2.6.1, 2.6.2, 2.6.3.
6. CESSNA NAV/COM 300R AMPLIFIERS ARE OPERATED "ALWAYS HOT". SPEAKER OUTPUTS FROM EACH SYSTEM DRIVE EITHER A 5 OHM, 10 WATT DUMMY LOAD OR THE SHIP'S SPEAKER AS DETERMINED BY THE TRANSMITTER SELECTED (REF PAGE 2.6.3)

7 WHEN AN OPTIONAL NAV-O-MATIC AUTOPILOT WITH OMNI COUPLER IS COMBINED WITH A CESSNA NAV/COM 300R, THE GRY/RED WIRE CONNECTS TO DEV + CIRCUIT & THE GRY/GRN WIRE CONNECTS TO DEV - CIRCUIT.

8 THE (5) BLU/TAN WIRES (ISO AMP INPUTS) FROM EACH NAV/COM SET TO BE CONNECTED TO TERMINALS 11 THRU 15 ON THE TERMINAL BOARD IN ANY SEQUENCE. CAUTION: DO NOT CONNECT (2) BLU/TAN WIRES FROM SAME SET TO SAME TERMINAL!

| LET | REVISION | DATE | APPD |
|---|---|---|---|
| | (SEE PAGE 2.3.1.0) | | |

| ITEM NO | PART NO. | DESCRIPTION | INSTALLED ON |
|---|---|---|---|

EQUIPMENT TABLE

| WIRE CODE NO | GA | MATERIAL | LG | TERMINALS | | SERIALS |
|---|---|---|---|---|---|---|
| | | | | | | |

WIRE TABLE

CESSNA AIRCRAFT CO., COMMERCIAL AIRCRAFT DIVISION, WICHITA, KANSAS

| | NAME | DATE |
|---|---|---|
| DRAWN | G WOOD | 3-10-69 |
| GROUP | | 8-5-64 |
| CHECK | | 7-64 |
| PROJ | | 8-5-64 |

TITLE: WIRING DIAGRAM — CESSNA NAV/COM 300R (ARC TYPE 514R) (ARC TYPE 515R)

Cessna.

DWG NO. 1270675

| SUPERSEDED BY | SUPERSEDES | MODEL | REV: | PAGE: |
|---|---|---|---|---|
| | | P206A, U206A | A | 2.3.1.1 |

FORM NO 80-161

| CHG LET | REVISION | BY DATE | CHK APPD |
|---|---|---|---|
| | | | |

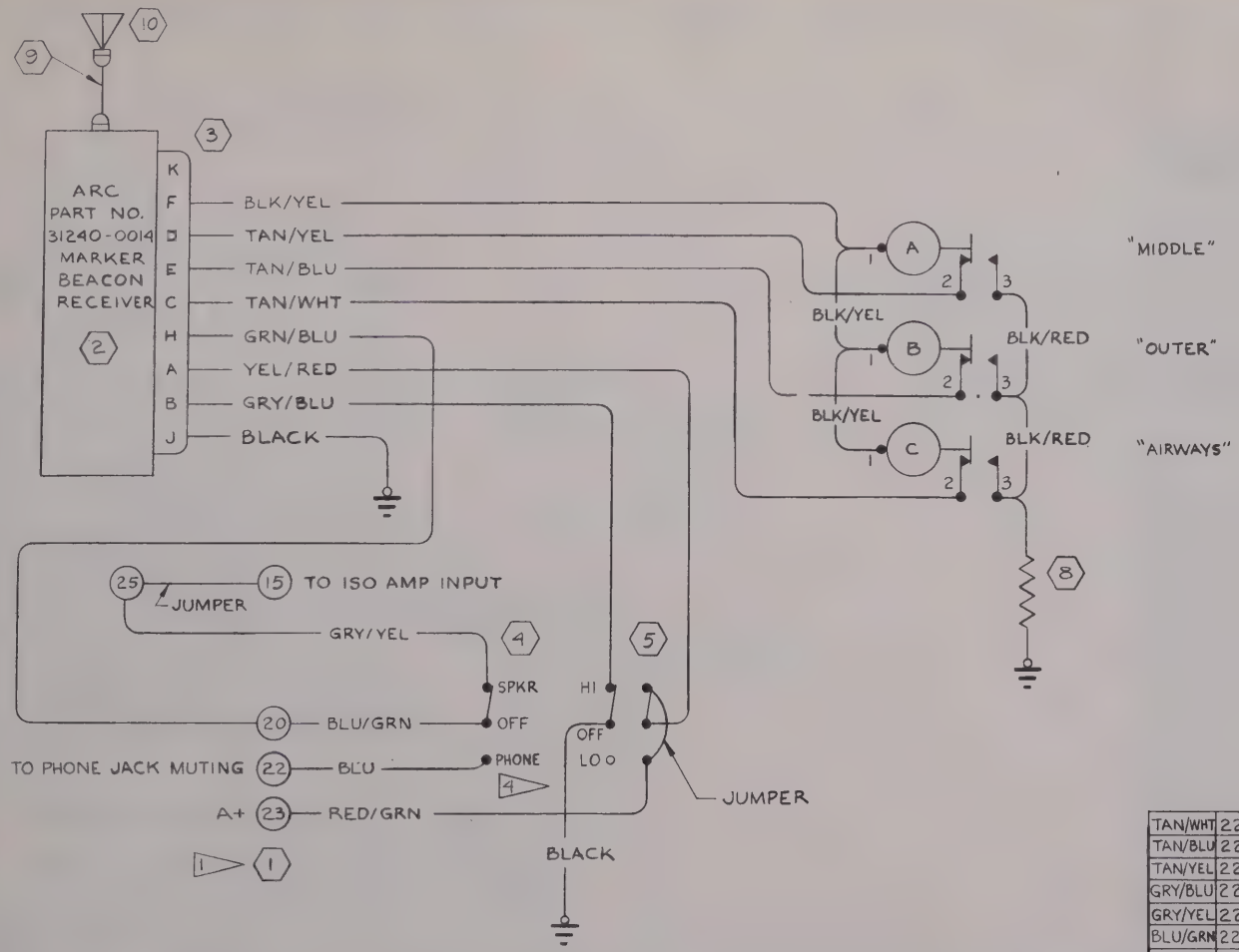


NOTES:

1. NUMBERS IN CIRCLES ARE NUMBERS ON 0770714-1 TERMINAL BLOCK ASSY.
2. WIRE MATERIAL PER S-1460.
3. TERMINAL BLOCK NUMBERS TO BE STAMPED ON WIRE PER CES-1015.
4. "PHONE" & "LO" FUNCTION TO BE ON KEYWAY SIDE OF SWITCH.

| | PART NO. | DESCRIPTION | INSTALLED ON |
|---|---|---|---|
| 10 | -611 | MARKER BCN ANT. | |
| 9 | -205 | CABLE ASSY | |
| 8 | 40Ω, 3 WATT | RESISTOR (OM) | |
| 7 | | | |
| 6 | | | |
| 5 | MST-205P | SWITCH (AELM) | |
| 4 | MST-105E | SWITCH (AELM) | |
| 3 | 28371-009 | PLUG (ARC) | |
| 2 | 31240-0014 | MKR BCN RCVR | (ARC) |
| 1 | 0770714-1 | TERM. BLOCK ASSY | |

| WIRE CODE NO | GA | MATERIAL | LG | TERMINALS | | | SERIALS |
|---|---|---|---|---|---|---|---|
| TAN/WHT | 22 | -22-10-9 | | SOLDER | SOLDER | | |
| TAN/BLU | 22 | -22-10-6 | | | SOLDER | | |
| TAN/YEL | 22 | -22-10-4 | | | SOLDER | | |
| GRY/BLU | 22 | -22-8-6 | | | SOLDER | | |
| GRY/YEL | 22 | -22-8-4 | | | S-1367-1-8 | | |
| BLU/GRN | 22 | -22-6-5 | | | S-1367-1-8 | | |
| BLUE | 22 | -22-6 | | | S-1367-1-8 | | |
| GRN/BLU | 20 | -20-5-6 | | | SOLDER | | |
| YEL/RED | 20 | -20-4-2 | | | SOLDER | | |
| RED/GRN | 20 | -20-2-5 | | | S-1367-1-8 | | |
| BLACK | 22 | -22-0 | | | S-1367-1-8 | | |
| BLACK | 22 | -22-0 | | | S-1367-1-8 | | |
| BLK/YEL | 22 | -22-0-4 | | SOLDER | SOLDER | | |

2 WIRE TABLE

CESSNA AIRCRAFT CO. COMMERCIAL AIRCRAFT DIVISION WICHITA, KANSAS

| | NAME | DATE |
|---|---|---|
| DRAWN | G WOOD | 2-25-64 |
| GROUP | | 5-5-64 |
| CHECK | | 7-1-64 |
| PROJ | | 8-5-64 |

TITLE: WIRING DIAGRAM — CESSNA MARKER BEACON 300 (OPT) (ARC TYPE 502B)

Cessna.

DWG NO 1270675

(SR4456)(SR4457)

| CHG LET | REVISION | BY DATE | CHK APPD |
|---|---|---|---|
| | | | |

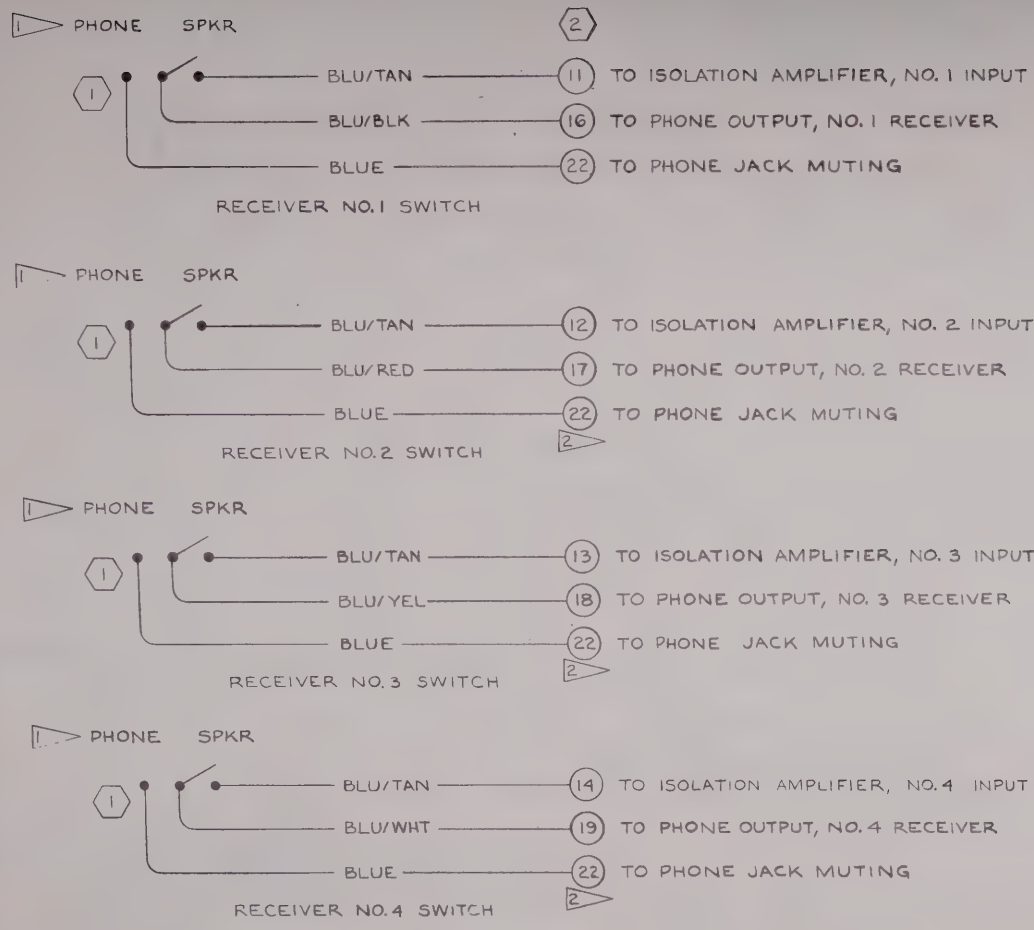


NOTES:

1. "PHONE" FUNCTION ON KEYWAY SIDE OF SWITCH.
2. PHONE TERMINAL MAY BE JUMPERED TO ADJACENT AUDIO SWITCH PHONE TERMINAL INSTEAD OF BEING ROUTED TO TERMINAL BLOCK.
3. WIRE MATERIAL PER S-1460.
4. TERMINAL BLOCK NUMBERS TO BE STAMPED ON WIRE PER CES-1015.

| W. RE CODE NO | GA | MATERIAL | LG | TERMINALS | | SERIALS |
|---|---|---|---|---|---|---|
| BLU/TAN | 22 | -22-6-10 | | SOLDER | S-1367-1-8 | |
| BLU/TAN | 22 | -22-6-10 | | | | |
| BLU/TAN | 22 | -22-6-10 | | | | |
| BLU/TAN | 22 | -22-6-10 | | | | |
| BLU/WHT | 22 | -22-6-9 | | | | |
| BLU/YEL | 22 | -22-6-4 | | | | |
| BLU/RED | 22 | -22-6-2 | | | | |
| BLU/BLK | 22 | -22-6-0 | | | | |
| BLUE | 22 | -22-6 | | | | |
| BLUE | 22 | -22-6 | | | | |
| BLUE | 22 | -22-6 | | | | |
| BLUE | 22 | -22-6 | | SOLDER | S-1367-1-8 | |

3 WIRE TABLE

| ITEM NO | PART NO | DESCRIPTION | INSTALLED ON |
|---|---|---|---|
| 2 | 0770714-1 | TERM. BLOCK ASSY | |
| 1 | MST-105D | SWITCH (AELM) | |

EQUIPMENT TABLE

CESSNA AIRCRAFT CO. COMMERCIAL AIRCRAFT DIVISION, WICHITA, KANSAS

| | NAME | DATE |
|---|---|---|
| DRAWN | G WOOD | 2-21-64 |
| GROUP | KRW TM | 8-5-64 |
| CHECK | R. Stuck | 7-11-64 |
| PROJ | H. McCarter | 8-5-64 |

TITLE: WIRING DIAGRAM — AUDIO SELECTOR SWITCHES

Cessna.

DWG NO 1270675

| SUPERSEDED BY | SUPERSEDES | MODEL | REV | PAGE |
|---|---|---|---|---|
| | | P206, U206 | | 2.0.1 |

FORM NO. 80-161

(SR 4456) (SR 4457)

| CHG LET | REVISION | BY DATE | CHK APPD |
|---|---|---|---|
| | | | |

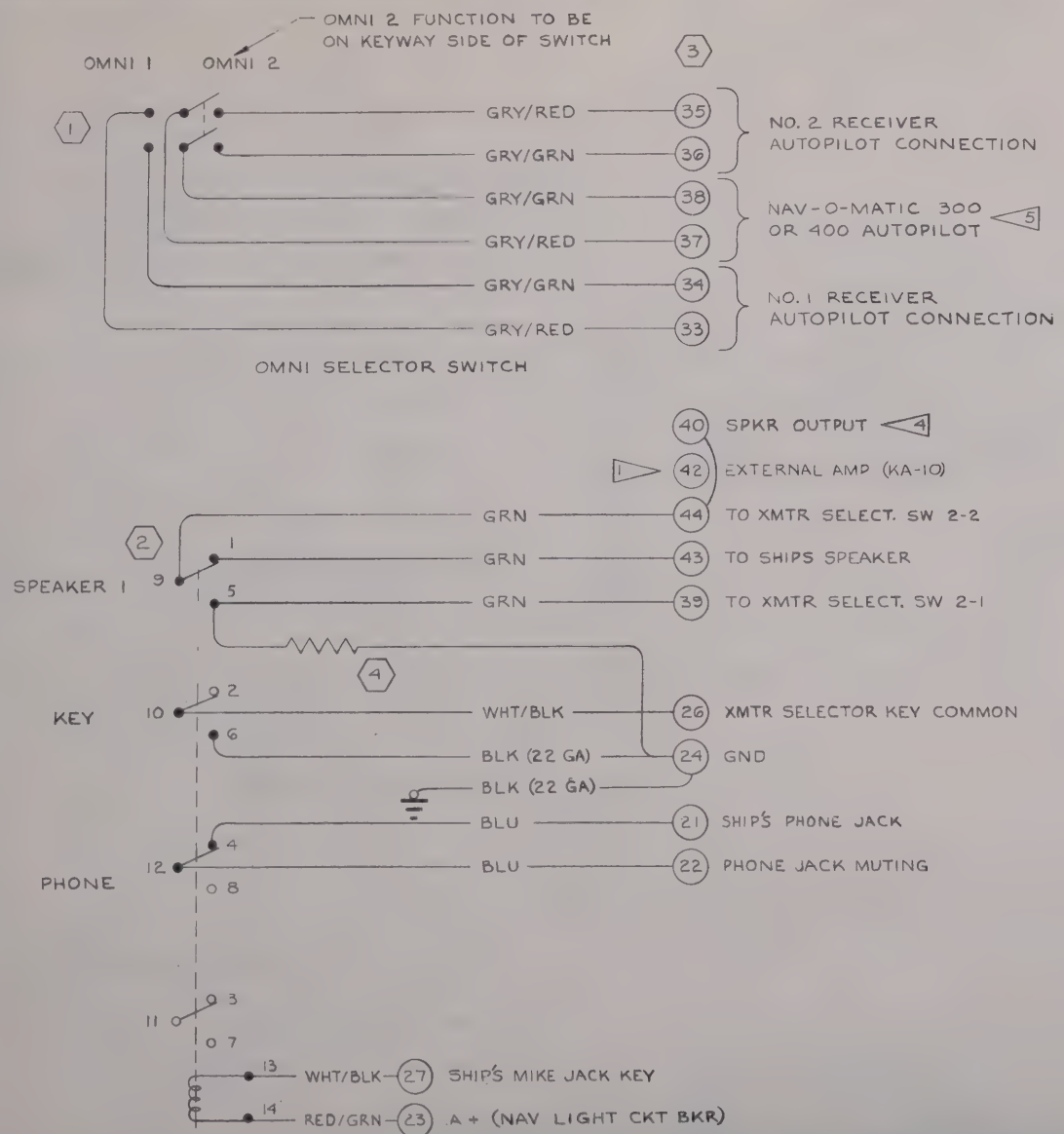


INTERNAL WIRING OF TERMINAL BOARD & MUTING RELAY

| | PART NO. | DESCRIPTION | INSTALLED ON |
|---|---|---|---|
| 4 | 5 OHM 10 WATT AXIAL LEAD | RESISTOR (OM) | |
| 3 | 0770714-1 | TERM. BLOCK ASSY | |
| 2 | KHP17D11 | RELAY (PBR) | |
| 1 | MST-205N | SWITCH (AELM) | |

NOTES:

1. JUMPER BETWEEN (42) & (44) TO COMPLETE CIRCUIT FOR KA-10 AMPLIFIER.
2. WIRE MATL PER S-1460.
3. TERMINAL BLOCK NUMBERS TO BE STAMPED ON WIRE PER CES-1015.
4. WHEN SINGLE TRANSCEIVER IS INSTALLED WITH ANY RECEIVING UNIT, THE SPKR OUTPUT OF THE TRANSCEIVER CONNECTS TO TERMINAL (40) & A JUMPER IS REQD BETWEEN (40) & (44). JUMPERS ARE ALSO REQD BETWEEN (26) & (28) FOR MIKE KEYING AND BETWEEN (30) & (31) FOR MIKE AUDIO CIRCUITS.
5. WHEN SINGLE OMNI INSTALLATION IS MADE WITH AN AUTOPILOT, JUMPERS ARE REQD BETWEEN (33) & (37) AND BETWEEN (34) & (38).

| WIRE CODE NO | GA | MATERIAL | LG | TERMINALS | | | SERIALS |
|---|---|---|---|---|---|---|---|
| BLACK | 22 | -22-0 | | S-1367-1-8 | S-1367-1-8 | | |
| WHT/BLK | 22 | -22-9-0 | | SOLDER | S-1367-1-8 | | |
| WHT/BLK | 22 | -22-9-0 | | | | | |
| GRY/RED | 22 | -22-8-2 | | | | | |
| GRY/RED | 22 | -22-8-2 | | | | | |
| GRY/RED | 22 | -22-8-2 | | | | | |
| GRY/GRN | 22 | -22-8-5 | | | | | |
| GRY/GRN | 22 | -22-8-5 | | | | | |
| GRY/GRN | 22 | -22-8-5 | | | | | |
| BLUE | 22 | -22-6 | | | | | |
| BLUE | 22 | -22-6 | | | | | |
| GRN | 20 | -20-5 | | | | | |
| GRN | 20 | -20-5 | | | | | |
| GRN | 20 | -20-5 | | | | | |
| BLACK | 22 | -22-0 | | | | | |
| RED/GRN | 20 | -20-2-5 | | SOLDER | S-1367-1-8 | | |

2 WIRE TABLE

CESSNA AIRCRAFT CO. COMMERCIAL AIRCRAFT DIVISION, WICHITA, KANSAS

| | NAME | DATE |
|---|---|---|
| DRAWN | G WOOD | 2-22-64 |
| GROUP | | 8-5-64 |
| CHECK | R Stice | 7-11-64 |
| PROJ | H McCarty | 8-5-64 |

TITLE: WIRING DIAGRAM — OMNI SWITCH, TERMINAL BLOCK & MUTING RELAY

Cessna.

DWG NO 1270675

(SR 445G)(SR 445T)

| LET | REVISION | DATE | APPD |
|---|---|---|---|
| | | | |

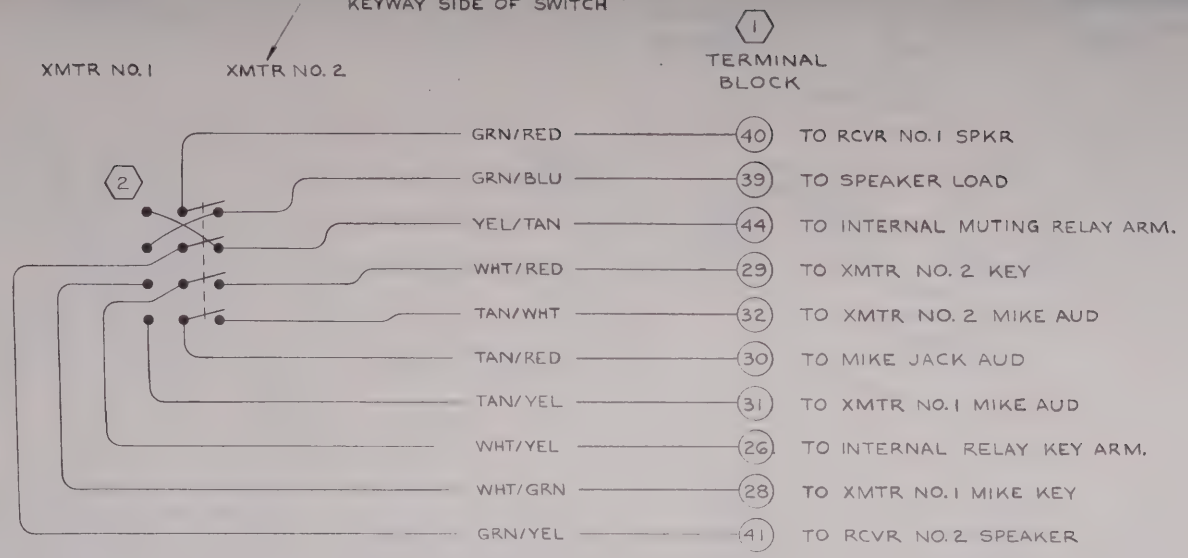


NOTES:
1. ALL WIRE MATL PER S-1460.
2. TERMINAL BLOCK NUMBERS TO BE STAMPED ON WIRE PER CES-1015.

| WIRE CODE NO | GA | MATERIAL | LG | TERMINALS | | SERALS |
|---|---|---|---|---|---|---|
| TAN/WHT | 22 | -22-10-9 | | SOLDER | S-1367-1-8 | |
| TAN/YEL | 22 | -22-10-4 | | | | |
| TAN/RED | 22 | -22-10-2 | | | | |
| WHT/GRN | 22 | -22-9-5 | | | | |
| WHT/YEL | 22 | -22-9-4 | | | | |
| WHT/RED | 22 | -22-9-2 | | | | |
| GRN/BLU | 20 | -20-5-6 | | | | |
| GRN/YEL | 20 | -20-5-4 | | | | |
| GRN/RED | 20 | -20-5-2 | | | | |
| YEL/TAN | 20 | -20-4-10 | | SOLDER | S 1561-1-8 | |

WIRE TABLE

| ITEM NO | PART NO | DESCRIPTION | INSTALLED ON |
|---|---|---|---|
| 2 | MST 405N | SWITCH (AELM) | |
| 1 | 0770714-1 | TERM. BLOCK ASSY | |

EQUIPMENT TABLE

CESSNA AIRCRAFT CO., COMMERCIAL AIRCRAFT DIVISION, WICHITA, KANSAS

| | NAME | DATE |
|---|---|---|
| DRAWN | G WOOD | 2-20-64 |
| GROUP | [illegible] | 8-5-65 |
| CHECK | R. Stuck | 7-11-64 |
| PROJ | H. McCarter | 8-5-64 |

TITLE: WIRING DIAGRAM — TRANSMITTER SELECTOR SWITCH

Cessna.

DWG NO. 1270675

| SUPERSEDED BY | SUPERSEDES | MODEL | REV | PAGE |
|---|---|---|---|---|
| | | 205-206 | | 2.6.3 |

| CHG LET | REVISION | BY / DATE | CHK / APPD |
|---|---|---|---|
| | | | |

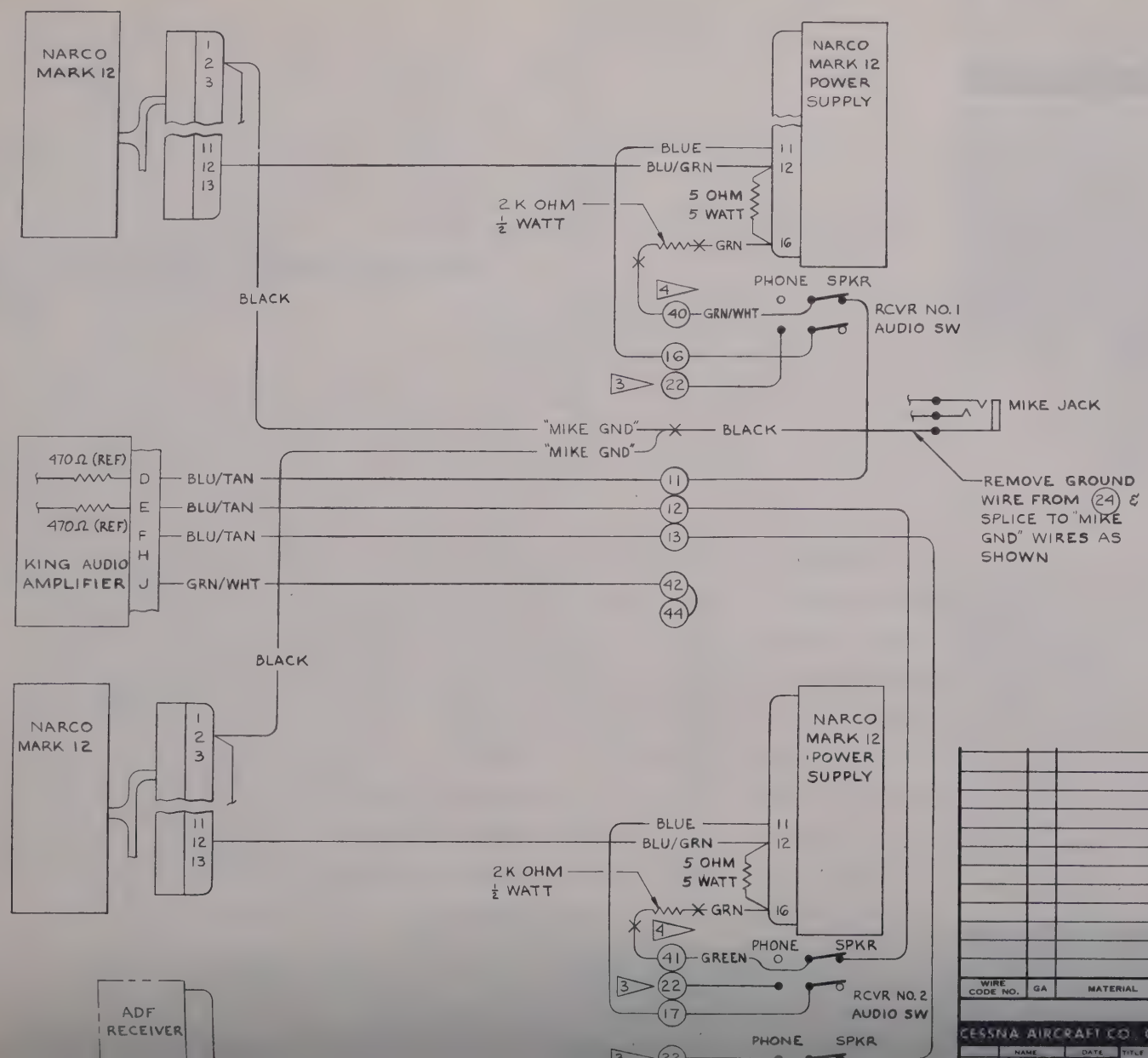


NOTES:

1. ◯ ARE NUMBERS ON TERMINAL BOARD.
2. ON SINGLE MARK 12 & ADF INSTL, AUDIO SW NO. 3 WILL NOT BE USED.

3 PHONE TERMINAL MAY BE JUMPERED TO ADJACENT AUDIO SWITCH PHONE TERMINAL INSTEAD OF BEING ROUTED TO TERMINAL BOARD.

4 REMOVE EXISTING WIRES FROM 40 & 41 (GRN/RED & GRN/YEL RESPECTIVELY) & TERMINATE WITH S-1557-1 CAP.

5 THIS IS A REFERENCE PRINT ONLY.

| WIRE CODE NO. | GA | MATERIAL | LG | TERMINALS | | SERIALS |
|---|---|---|---|---|---|---|

WIRE TABLE

CESSNA AIRCRAFT CO. COMMERCIAL AIRCRAFT DIVISION WICHITA, KANSAS

| NAME | DATE | TITLE |
|---|---|---|

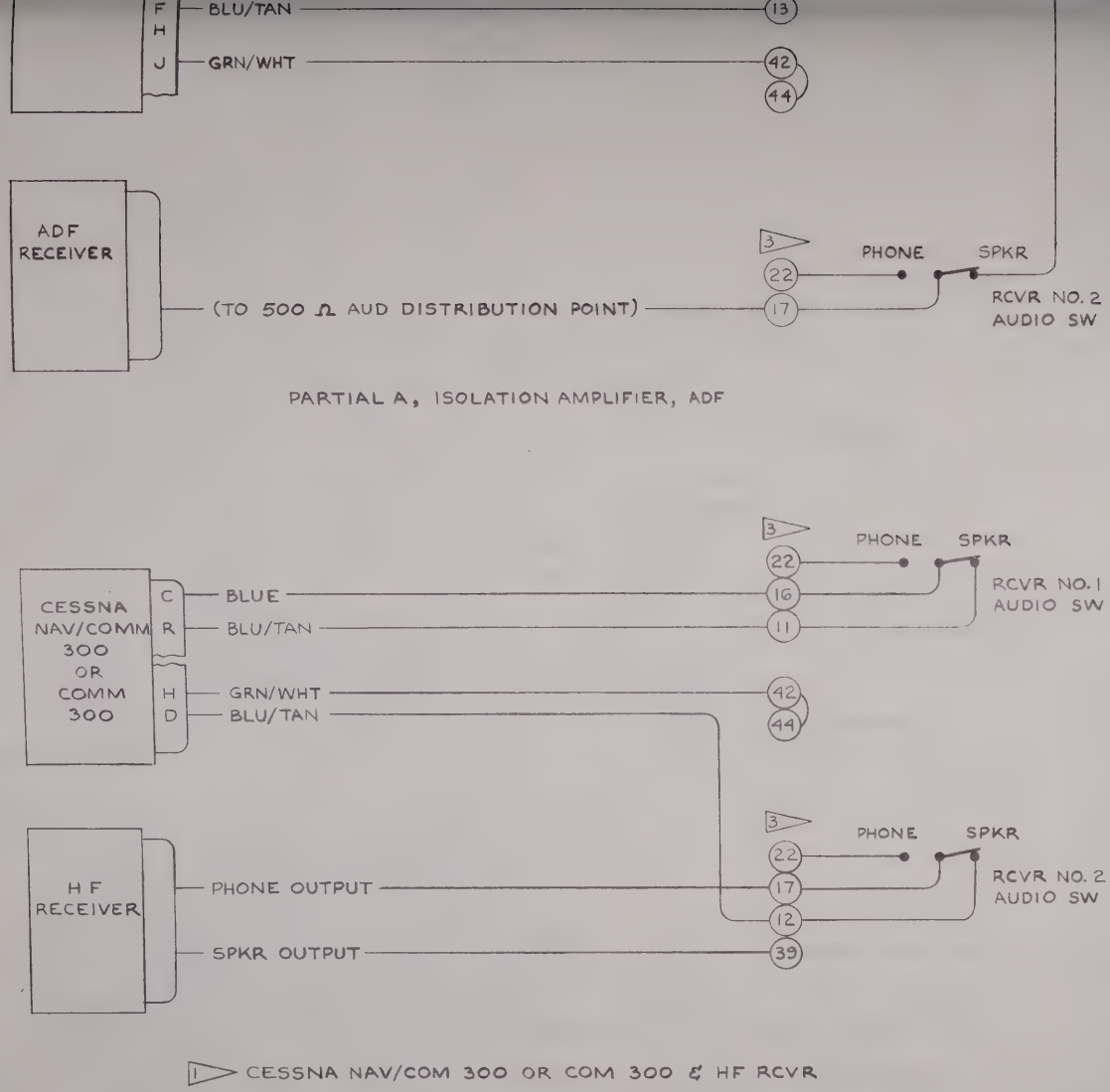


PARTIAL A, ISOLATION AMPLIFIER, ADF

1 CESSNA NAV/COM 300 OR COM 300 & HF RCVR

NOTES:

1. SPKR OUTPUT OF RCVR'S WILL NOT CONNECT TO (40) OR (41) ON TERMINAL BOARD.
2. ◯ ARE NUMBERS ON TERMINAL BOARD.
3. PHONE TERMINAL MAY BE JUMPERED TO ADJACENT AUDIO SWITCH PHONE TERMINAL INSTEAD OF BEING ROUTED TO TERMINAL BOARD.
4. THIS IS A REF PRINT ONLY.

| WIRE CODE NO. | GA | MATERIAL | LG | TERMINALS | | SERIALS |
|---|---|---|---|---|---|---|

WIRE TABLE

CESSNA AIRCRAFT CO., COMMERCIAL AIRCRAFT DIVISION, WICHITA KANSAS

| | NAME | DATE |
|---|---|---|
| DRAWN | G WOOD | 2-15-65 |
| GROUP | H Wise | 2-16-65 |
| CHECK | [illegible] | 2-16-65 |
| PROJ | N. McCarter | 2-19-65 |

TITLE: WIRING DIAGRAM— TYPICAL SWITCHING-PARTIAL "A", ISO AMP & ADF; H F TRANSCEIVER & COMM 300

Cessna.

DWG NO: 1270675

SUPERSEDED BY: | SUPERSEDES: | MODEL: P206-U206 | REV: | PAGE: 2.6.5

| ITEM NO | PART NO. | DESCRIPTION | INSTALLED ON |
|---|---|---|---|

EQUIPMENT TABLE

FORM NO 80-161A

(SR4938)

| CHG LET | REVISION | BY DATE | CHK APPD |
|---|---|---|---|
| | | | |

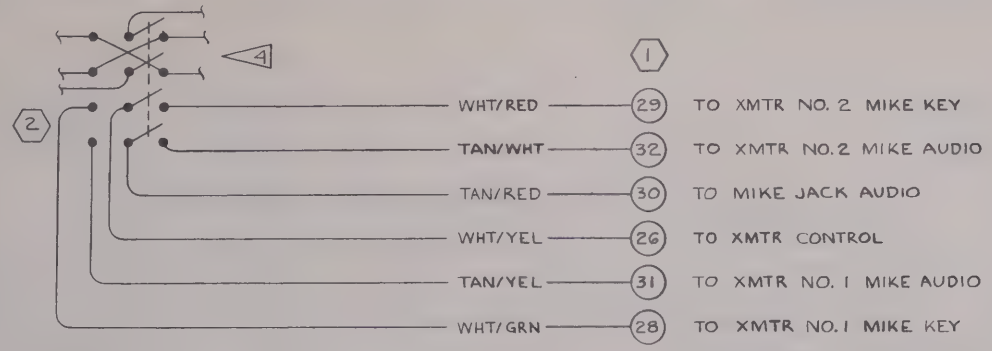


NOTE:

1. INFORMATION ON THIS PAGE IS TO BE USED ONLY WITH KING KA-25C AUDIO AMPLIFIER.
2. TERMINAL BLOCK NUMBERS TO BE STAMPED ON WIRE PER CES-1015.
3. WHEN A SINGLE TRANSCEIVER IS INSTALLED WITH ANY RECEIVING UNIT, JUMPERS ARE REQD BETWEEN (26) & (28) FOR MIKE KEYING, AND BETWEEN (30) & (31) FOR MIKE AUDIO.

4 REF PAGE 2.6.3 FOR COMPLETE SWITCH WIRING. TERMINALS OF WIRES NOT USED ARE TO BE COVERED WITH VINYL SLEEVING & WIRES TO BE TIED INTO WIRE BUNDLE.

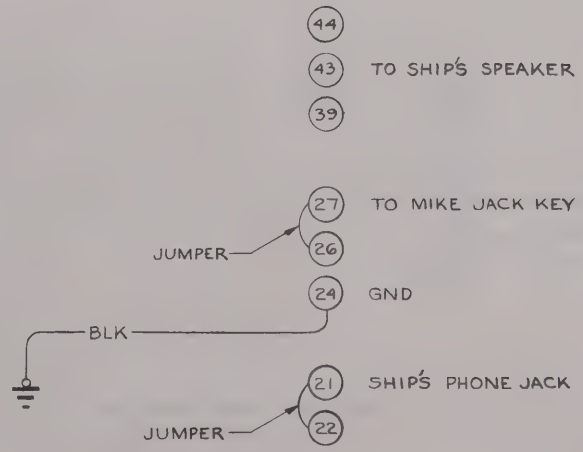


| WIRE CODE NO. | GA | MATERIAL | LG | TERMINALS | | SERIALS |
|---|---|---|---|---|---|---|
| TAN/YEL | 22 | S-1960-22-10-9 | | SOLDER | S-1367-1-8 | |
| TAN/WHT | 22 | -22-10-3 | | | | |
| TAN/RED | 22 | -22-10-2 | | | | |
| WHT/YEL | 22 | -22-9-4 | | | | |
| WHT/GRN | 22 | -22-9-5 | | | | |
| WHT/RED | 22 | -22-9-2 | | SOLDER | | |
| BLACK | 22 | S-1960-22-0 | | S-1367-1-8 | S-1367-1-8 | |

WIRE TABLE

CESSNA AIRCRAFT CO. COMMERCIAL AIRCRAFT DIVISION, WICHITA KANSAS

| | NAME | DATE | TITLE |
|---|---|---|---|
| DRAWN | | | |
| ENGR | | | |
| APPD | | | |

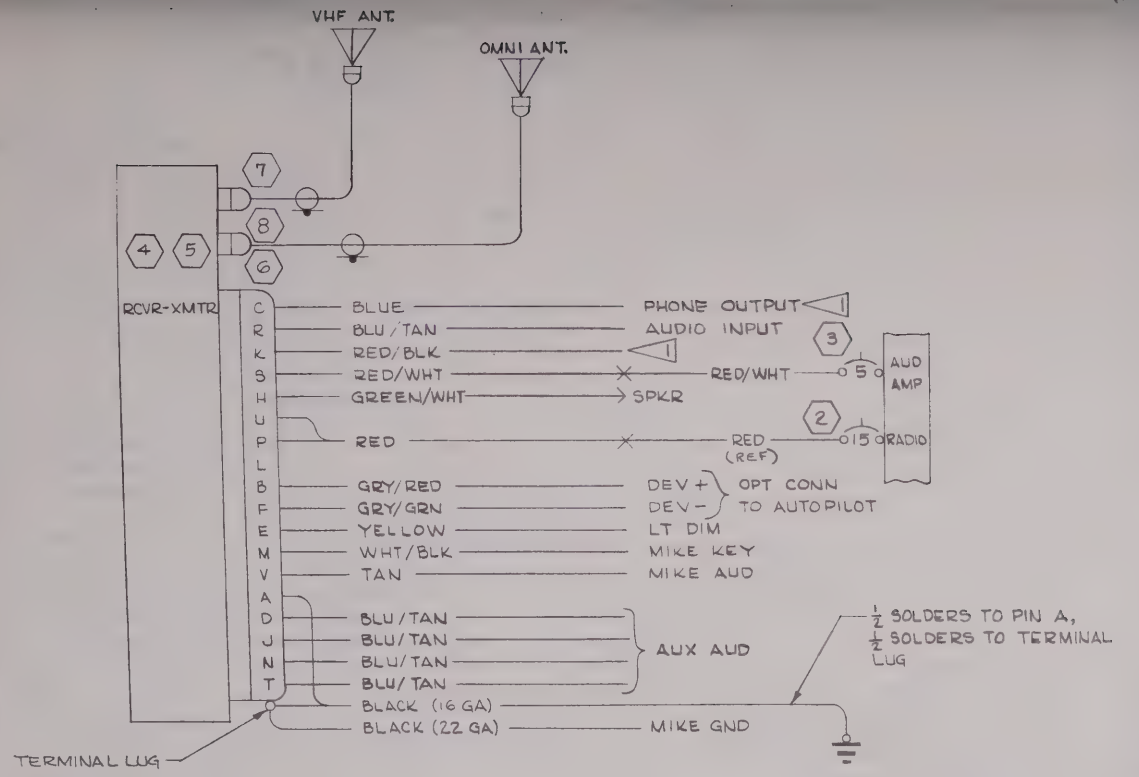


Inactive
SEP. P206-0161 & ON
SEP. U206-0438 ON
GLW 6-3-65
HW 6-7-65
PRS TM
HLA HMC

NOTES:

1. ON SINGLE CESSNA NAV/COM 300 INSTL, RED/BLK WIRE (PIN K) IS CONNECTED TO RED/WHT WIRE (PIN S) WITH AN S-1370-1 SPLICE, AND BLUE WIRE (PIN C) IS CONNECTED TO BLU/TAN WIRE (PIN R, D, J, N, OR T) WITH AN S-1370-1 SPLICE. WHEN THE NAV/COM 300 IS INSTALLED WITH OTHER RADIO UNITS, RED/WHT WIRE CONNECTS TO CKT BKR AS SHOWN & RED/BLK WIRE IS CUTOFF AT CONNECTOR; BLUE WIRE CONNECTS TO WIPER OF A SPKR-PHONE SWITCH & BLU/TAN WIRE CONNECTS TO SPKR TERMINAL OF SPKR-PHONE SWITCH.
2. S-1557-1 CAP REPLACED WITH S-1367-1-8 TERMINAL WHEN COMBINED WITH OTHER RADIOS.
3. FOR DUAL 514A INSTALLATIONS, REF PAGE 2.7.1.1

(SEE PAGE 2.7.1.1 FOR CONTINUATION OF NOTES)

| ITEM NO | PART NO. | DESCRIPTION | INSTALLED ON |
|---|---|---|---|
| 8 | 29752 | CONNECTOR (ARC) | |
| 7 | 29753 | CONNECTOR (ARC) | |
| 6 | 29747-0018 | CONNECTOR (ARC) | |
| 5 | 30410-1314 | RCVR-XMTR (360 CH) | (ARC) |
| 4 | 30410-1214 | RCVR-XMTR (100 CH) | (ARC) |
| 3 | S-1360-5 | CIRCUIT BREAKER | |
| 2 | S-1360-15 | CIRCUIT BREAKER | |
| 1 | | | |

EQUIPMENT TABLE

| WIRE CODE NO. | GA | MATERIAL | LG | TERMINALS | | | SERIALS |
|---|---|---|---|---|---|---|---|
| RED/WHT | 18 | -18-2-9 | | S-1370-1 | S-1367-1-6 | | |
| BLU/TAN | 22 | -22-6-10 | | SOLDER | S-1557-1 | 2 | |
| BLU/TAN | 22 | -22-6-10 | | | S-1557-1 | 2 | |
| BLU/TAN | 22 | -22-6-10 | | | S-1557-1 | 2 | |
| BLACK | 16 | -16-0 | | | S-1367-2-8 | | |
| WHT/BLK | 22 | -22-9-0 | | | | | |
| GRY/GRN | 22 | -22-8-5 | | | S-1557-1 | | |
| GRY RED | 22 | -22-8-2 | | | S-1557-1 | | |
| BLU/TAN | 22 | -22-6-10 | | | S-1557-1 | 2 | |
| BLU/TAN | 22 | -22-6-10 | | | S-1557-1 | 2 | |
| RED/WHT | 18 | -18-2-9 | | | | | |
| RED/BLK | 18 | -18-2-0 | | | | | |
| BLACK | 22 | -22-0 | | | | | |
| TAN | 22 | -22-10 | | | | | |
| BLUE | 22 | -22-6 | | | | | |
| RED | 16 | -16-2 | | | S-1370-2 | | |
| YELLOW | 18 | -18-4 | | | | | |
| GRN/WHT | 20 | -20-5-9 | | SOLDER | S-341-2 | | |

8

WIRE TABLE

CESSNA AIRCRAFT CO. COMMERCIAL AIRCRAFT DIVISION, WICHITA, KANSAS

| | NAME | DATE |
|---|---|---|
| DRAWN | BALES | 7-6-64 |
| GROUP | R.E. Moore | 8-15-64 |
| CHECK | R. Stuck | 8-15-64 |
| PROJ | H. Wise | 8-17-64 |

TITLE: WIRING DIAGRAM — CESSNA NAV/COM 300 (ARC TYPE 514A)

Cessna.

DWG NO. 1270675

SUPERSEDED BY 1270675 PAGE 2.31.1.0 | SUPERSEDES 1270625 PAGE 17.25 | MODEL P206, U206 | REV. | PAGE 2.7.1.0

FORM NO. 80-161

(SR4456)(SR 4457)

| CHG LET | REVISION | BY / DATE | CHK / APPD |
|---|---|---|---|
| | | | |

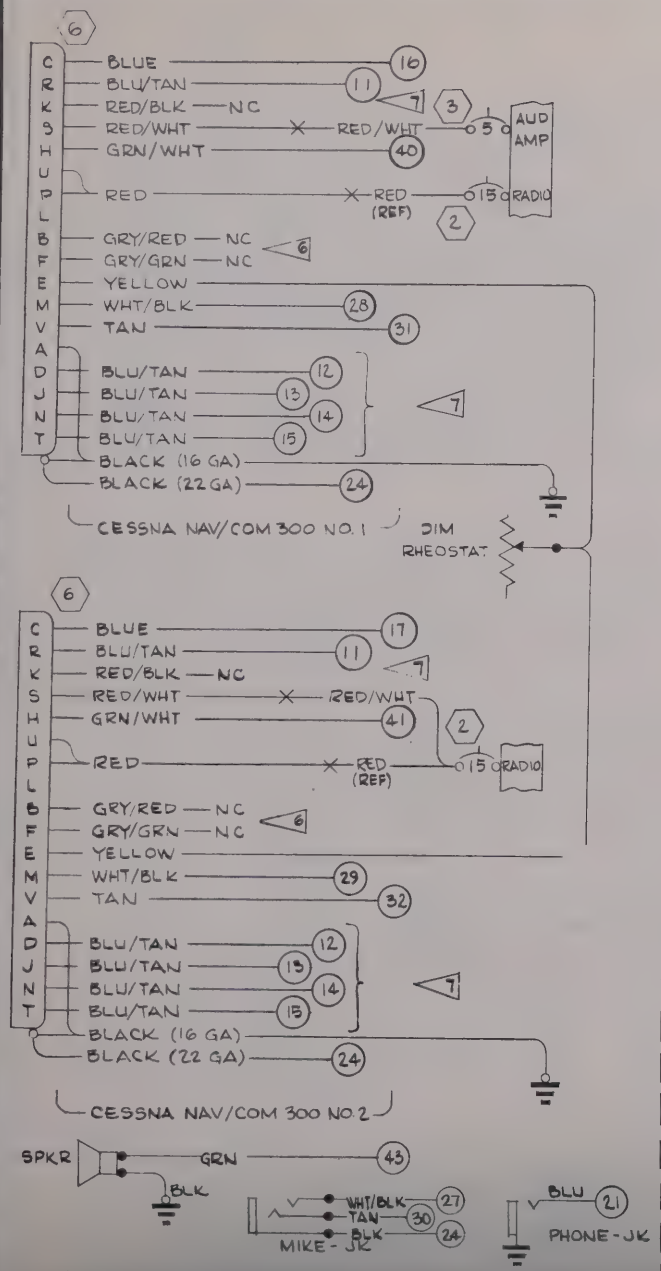


TYPICAL INTERCONNECTION OF DUAL CESSNA

NOTES CONTINUED:

4. CIRCLED NUMBERS "◯" REFER TO TERMINALS ON TERMINAL BOARD ASSY (REF PAGE 2.6.1, 2.6.2, 2.6.3)
5. CESSNA NAV/COM 300 AMPLIFIERS ARE OPERATED "ALWAYS HOT". SPEAKER OUTPUTS FROM EACH SYSTEM DRIVE EITHER A 5 OHM, 10 WATT DUMMY LOAD OR THE SHIP'S SPEAKER AS DETERMINED BY THE TRANSMITTER SELECTED (REF PAGE 2.6.3)

6 WHEN AN OPTIONAL NAV-O-MATIC AUTOPILOT WITH OMNI COUPLER IS COMBINED WITH A CESSNA NAV/COM 300, THE GRY/RED WIRE CONNECTS TO DEV + CIRCUIT & THE GRY/GRN WIRE CONNECTS TO DEV − CIRCUIT.

7 THE (5) BLU/TAN (150 AMP INPUTS) FROM EACH NAV/COM SET TO BE CONNECTED TO TERMINALS 11 THRU 15 ON TERMINAL BOARD IN ANY SEQUENCE. CAUTION: DO NOT CONNECT (2) BLU/TAN WIRES FROM SAME SET TO SAME TERMINAL.

8 WIRE MATERIAL PER S-1460.

Inactive
SER. P206-0161 ON
SER. U206-0438 ON
GLW 6-3-65
RKS 6-7-65

| WIRE CODE NO | GA | MATERIAL | LG | TERMINALS | | SERIALS |
|---|---|---|---|---|---|---|

WIRE TABLE

CESSNA AIRCRAFT CO. COMMERCIAL AIRCRAFT DIVISION, WICHITA, KANSAS

| | NAME | DATE |
|---|---|---|
| DRAWN | BALES | 7-6-64 |
| GROUP | R.E. Moore | 8-15-64 |
| CHECK | R. Stuck | 8-15-64 |
| PROJ | H. Wise | 8-17-64 |

TITLE: WIRING DIAGRAM — CESSNA NAV/COM 300

(ARC TYPE 514A)

Cessna.

DWG NO 1270675

| PART NO | DESCRIPTION | INSTALLED ON |
|---|---|---|

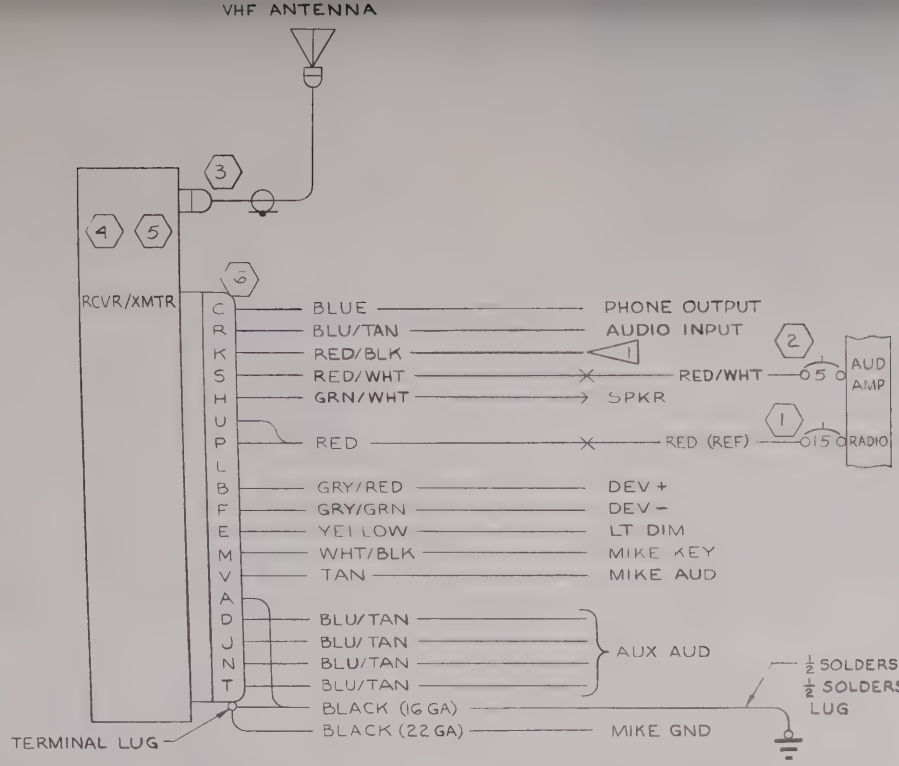


NOTES:

1. ON SINGLE CESSNA COM 300 INSTL, RED/BLK WIRE (PIN K) IS CONNECTED TO RED/WHT WIRE (PIN S) WITH AN S-1370-1 SPLICE, AND BLUE WIRE (PIN C) IS CONNECTED TO BLU/TAN WIRE (PIN R) WITH AN S-1370-1 SPLICE. WHEN THE COM 300 IS INSTALLED WITH OTHER RADIO UNITS, RED/WHT WIRE CONNECTS TO CKT BKR AS SHOWN & RED/BLK WIRE IS TERMINATED WITH S-1557-1 CAP; BLUE WIRE CONNECTS TO WIPER OF A SPKR-PHONE SWITCH & BLU/TAN WIRE CONNECTS TO SPKR TERMINAL OF SPKR-PHONE SWITCH.
2. S-1557-1 CAP REPLACED WITH S-1367-1-8 TERMINAL WHEN COMBINED WITH OTHER RADIOS.
3. WIRE MATL PER S-1460.

| ITEM NO | PART NO. | DESCRIPTION | INSTALLED ON |
|---|---|---|---|
| 6 | 29747-0018 | CONNECTOR (ARC) | |
| 5 | 31390-1614 | RCVR/XMTR (EXP)(ARC) | |
| 4 | 31390-1114 | RCVR/XMTR (ARC) | |
| 3 | 29753 | CONNECTOR (ARC) | |
| 2 | S-1360-5 | CIRCUIT BREAKER | |
| 1 | S-1360-15 | CIRCUIT BREAKER | |

EQUIPMENT TABLE

| WIRE CODE NO. | GA | MATERIAL | LG | TERMINALS | | SERIALS |
|---|---|---|---|---|---|---|
| RED/WHT | 18 | -18-2-9 | | S-1370-1 | S-1367-1-6 | |
| BLU/TAN | 22 | -22-6-10 | | SOLDER | S-1557-1 | 2 |
| BLU/TAN | 22 | -22-6-10 | | | S-1557-1 | 2 |
| BLU/TAN | 22 | -22-6-10 | | | S-1557-1 | 2 |
| BLACK | 16 | -16-0 | | | S-1367-2-8 | |
| WHT/BLK | 22 | -22-9-0 | | | | |
| GRY/GRN | 22 | -22-8-5 | | | S-1557-1 | |
| GRY/RED | 22 | -22-8-2 | | | S-1557-1 | |
| BLU/TAN | 22 | -22-6-10 | | | S-1557-1 | 2 |
| BLU/TAN | 22 | -22-6-10 | | | | |
| RED/WHT | 18 | -18-2-9 | | | | |
| RED/BLK | 18 | -18-2-0 | | | | |
| BLACK | 22 | -22-0 | | | | |
| TAN | 22 | -22-10 | | | | |
| BLUE | 22 | -22-6 | | | | |
| RED | 16 | -16-2 | | | S-1370-2 | |
| YELLOW | 18 | -18-4 | | | | |
| GRN/WHT | 20 | -20-5-9 | | SOLDER | S-341-2 | |

3 WIRE TABLE

CESSNA AIRCRAFT CO., COMMERCIAL AIRCRAFT DIVISION, WICHITA, KANSAS

| | NAME | DATE |
|---|---|---|
| DRAWN | G WOOD | 7-16-69 |
| GROUP | TM | 8-17-69 |
| CHECK | P Fick | 8-15-69 |
| PROJ | H Wise | 8-13-69 |

TITLE: WIRING DIAGRAM — CESSNA COM 300 (ARC TYPE 524A)

Cessna

DWG NO 1270675

| SUPERSEDED BY | SUPERSEDES | MODEL | REV | PAGE |
|---|---|---|---|---|
| | | P206, U206 | | 2.7.2 |

FORM NO. 80-161

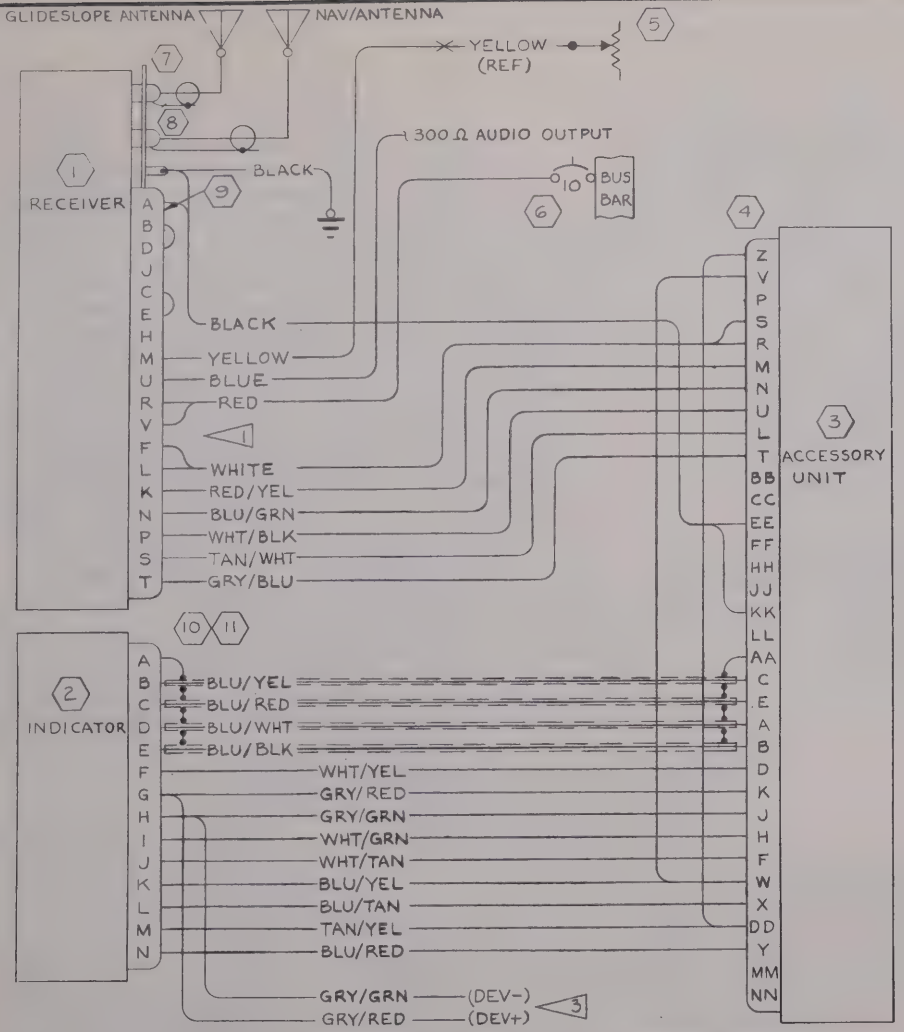


NOTES: (SR 4456)(SR 4457)

1. RED, WHITE & BLACK 16 GA WIRES TO BE HALVED & SOLDERED TO PINS AS SHOWN.
2. WIRE MATERIAL PER S-1460 EXCEPT FOR SHIELDED WIRE.
3. TERMINALS NOT REQD WHEN RADIO IS INSTALLED WITH AN AUTOPILOT.

| CHG LET | REVISION | BY DATE | CHK APPD |
|---|---|---|---|
| A | BY REVISION: ADD BLACK WIRE FROM PIN A OF RCVR TO PIN EE & KK OF ACCESSORY UNIT. REMOVED JUMPER FROM PIN P TO PIN Z OF ACCESSORY UNIT. REMOVED BLACK WIRE FROM PIN Z TO GND ON ACCESSORY UNIT. ADD JUMPER FROM PIN Z TO PIN DD OF ACCESSORY UNIT. ADD JUMPER FROM PIN V TO PIN W | GLW 11-7-64 | RRS and JM KPW |

| | | | | | | | |
|---|---|---|---|---|---|---|---|
| BLACK | 16 | -16-0 | | SOLDER | SOLDER | | |
| BLACK | 16 | -16-0 | | S-1367-2-8 | SOLDER | | |
| BLU/WHT | 22-5 | S-1461-22-6-9 | | SOLDER | SOLDER | | |
| BLU/YEL | 22-5 | S-1461-22-6-4 | | ↓ | ↓ | | |
| BLU/BLK | 22-5 | S-1461-22-6-0 | | | | | |
| BLU/RED | 22-5 | S-1461-22-6-2 | | | | | |
| WHT/BLK | 22 | -22-9-0 | | | | | |
| TAN/WHT | 22 | -22-10-9 | | | | | |
| TAN/YEL | 22 | -22-10-4 | | | | | |
| WHT/TAN | 22 | -22-9-10 | | | | | |
| WHT/GRN | 22 | -22-9-5 | | | ↓ | | |
| WHT/YEL | 22 | -22-9-4 | | ↓ | SOLDER | | |
| GRY/GRN | 22 | -22-8-5 | | SOLDER | S-1557-1 | | |
| GRY/GRN | 22 | -22-8-5 | | SOLDER | SOLDER | | |
| GRY/RED | 22 | -22-8-2 | | ↓ | S-1557-1 | | |
| GRY/RED | 22 | -22-8-2 | | | SOLDER | | |
| GRY/BLU | 22 | -22-8-6 | | | ↓ | | |
| BLU/TAN | 22 | -22-6-10 | | | | | |
| BLU/GRN | 22 | -22-6-5 | | | | | |
| BLU/YEL | 22 | -22-6-4 | | | | | |
| BLU/RED | 22 | -22-6-2 | | | | | |
| RED/YEL | 22 | -22-2-4 | | | ↓ | | |
| WHITE | 16 | -16-9 | | | SOLDER | | |
| BLUE | 22 | -22-6 | | ↓ | | | |
| YELLOW | 18 | -18-4 | | ↓ | S-1370-1 | | |
| RED | 16 | -16-2 | | SOLDER | S-1367-2-6 | | |
| WIRE CODE NO. | GA | MATERIAL | LG | TERMINALS | | | SERIALS |

2 WIRE TABLE

| | PART NO. | DESCRIPTION | INSTALLED ON |
|---|---|---|---|
| 11 | MS3057-12A | CLAMP | |
| 10 | MS3106A-20-27S | PLUG | |
| 9 | 29747-0018 | CONNECTOR | |
| 8 | 29752 | CONNECTOR (ARC) | |
| 7 | 29753 | CONNECTOR (ARC) | |
| 6 | S-1360-10 | CIRCUIT BREAKER | |
| 5 | R-12½-75-RS34 | RHEOSTAT (TRTA) | |
| 4 | 29747-0034 | CONNECTOR (ARC) | |
| 3 | 32890-0014 | ACCESSORY UNIT (ARC RA-525A) | |
| 2 | 32350 | INDICATOR (ARC IN-525A) | |
| 1 | 31380-1000 | RCVR (ARC R-525A-10) | |

CESSNA AIRCRAFT CO. COMMERCIAL AIRCRAFT DIVISION WICHITA KANSAS

| | NAME | DATE |
|---|---|---|
| DRAWN | G WOOD | 4-30-64 |
| GROUP | | 8-5-64 |
| CHECK | | 7-17-64 |
| PROJ | | 8-4-64 |
| | | 8-5-64 |

TITLE: WIRING DIAGRAM — CESSNA NAV/OMNI 300 (ARC TYPE 525A)

Cessna.

DWG NO 1270675

REV | PAGE

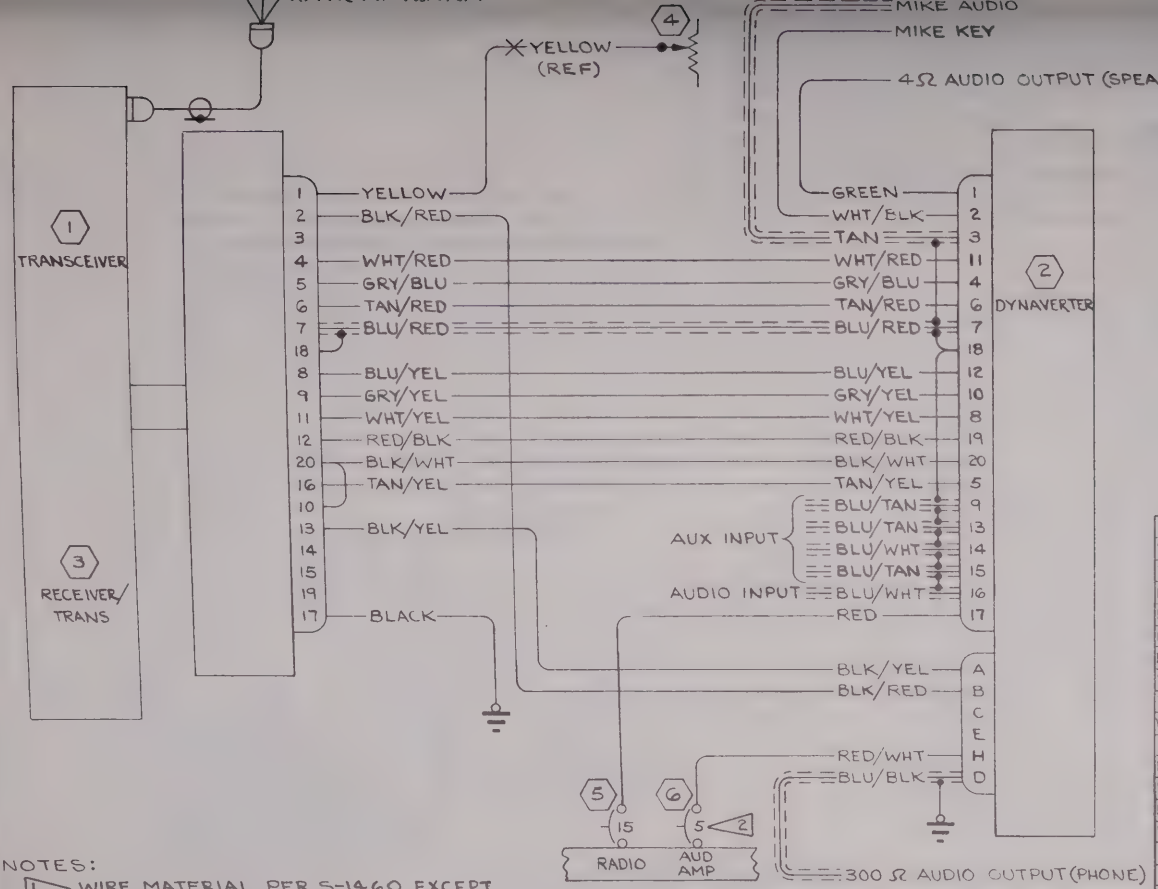


NOTES:

1. WIRE MATERIAL PER S-1460 EXCEPT FOR SHIELDED WIRE.
2. RED/WHT WIRE (ISO-AMP POWER) MAY BE CONNECTED TO A DIFFERENT BREAKER WHEN THIS SYSTEM IS COMBINED WITH OTHER 500 SERIES EQUIPMENT.

| WIRE CODE NO | GA | MATERIAL | LG | TERMINALS | | SERIALS |
|---|---|---|---|---|---|---|
| BLACK | 16 | -16-0 | | SOLDER | S-1367-2-8 | |
| RED/WHT | 18 | -18-2-9 | | | S-1367-1-6 | |
| BLU/BLK | 22S | S-1461-22-6-0 | | | | |
| BLU/WHT | 22S | S-1461-22-6-9 | | | | |
| BLU/WHT | 22S | S-1461-22-6-9 | | | | |
| BLU/TAN | 22S | S-1461-22-6-10 | | | | |
| BLU/TAN | 22S | S-1461-22-6-10 | | | | |
| BLU/TAN | 22S | S-1461-22-6-10 | | | | |
| TAN | 22S | S-1461-22-10 | | | | |
| WHT/BLK | 22 | -22-9-0 | | | | |
| GREEN | 20 | -20-5 | | | | |
| BLK/WHT | 18 | -18-0-9 | | | SOLDER | |
| RED/BLK | 18 | -18-2-0 | | | | |
| BLU/YEL | 22 | -22-6-4 | | | | |
| BLU/RED | 22S | S-1461-22-6-2 | | | | |
| TAN/YEL | 22 | -22-10-4 | | | | |
| TAN/RED | 22 | -22-10-2 | | | | |
| GRY/YEL | 22 | -22-8-4 | | | | |
| GRY/BLU | 22 | -22-8-6 | | | | |
| WHT/YEL | 22 | -22-9-4 | | | | |
| WHT/RED | 22 | -22-9-2 | | | | |
| BLK/YEL | 22 | -22-0-4 | | | | |
| BLK/RED | 22 | -22-0-2 | | | SOLDER | |
| YELLOW | 18 | -18-4 | | | S-1370-1 | |
| RED | 16 | -16-2 | | SOLDER | S-1367-2-6 | |

1 WIRE TABLE

| ITEM NO | PART NO. | DESCRIPTION | INSTALLED ON |
|---|---|---|---|
| 6 | S-1360-5 | CIRCUIT BREAKER | |
| 5 | S-1360-15 | CIRCUIT BREAKER | |
| 4 | R-12½-75-RS34 | RHEOSTAT (TRTA) | |
| 3 | 33580-1000 | RECEIVER/TRANS (ARC TYPE RT-302H) | |
| 2 | 32380-0014 | DYNAVERTER (ARC TYPE DV-302B) | |
| 1 | 33200-1000 | TRANSCEIVER (ARC TYPE RT-3026-10) | |

EQUIPMENT TABLE

CESSNA AIRCRAFT CO. COMMERCIAL AIRCRAFT DIVISION, WICHITA, KANSAS

| | NAME | DATE |
|---|---|---|
| DRAWN | RIDDER | 7-13-64 |
| GROUP | TM | 5-1764 |
| CHECK | R. Stirk | 8-7-64 |
| PROJ | // Wind | 8-17-64 |

TITLE: WIRING DIAGRAM — CESSNA TRANSCEIVER 500 (ARC TYPE 302G)

Cessna.

DWG NO. 1270675

SUPERSEDED BY | SUPERSEDES 1270625 | MODEL: P206 & U206 | REV: | PAGE: 2.10.1

FORM NO. 80-161

(SR4456)(SR4457)

| CHG LET | REVISION | BY DATE | CHK APPD |
|---|---|---|---|
| A | ADDED A-263 CHOKE IN A+ LINE. ADDED TO NOTE 2. ADDED 33827 | SKW 9-10-65 | |

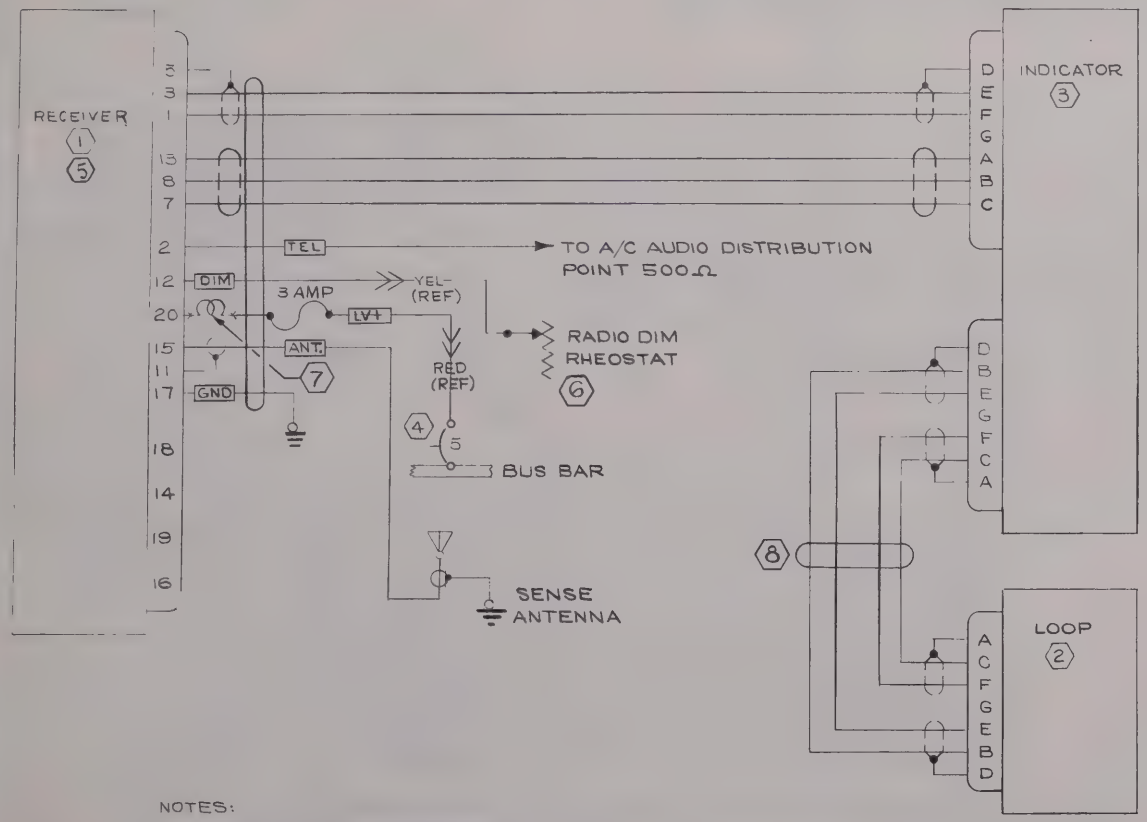


NOTES:

1. CONNECTIONS SHOWN ARE FOR TOP MOUNTED SENSE & BOTTOM MOUNTED LOOP ANTENNA.
2. ALL WIRES VENDOR FURNISHED WITH RCVR, EXCEPT CHOKE IN CIRCUIT BETWEEN PIN 20 & FUSEHOLDER WHICH MUST BE ADDED ON INSTL IN ACFT.

| | PART NO. | DESCRIPTION | INSTALLED ON |
|---|---|---|---|
| 8 | 33827 | LOOP CABLE (ARC) | |
| 7 | A-263 | CHOKE (CTAT) | |
| 6 | R-12½-75-RS34 | RHEOSTAT (TRTA) | |
| 5 | 28340-1400 | RCVR (WITH BFO) | (ARC R-521A-14) |
| 4 | S-1360-5 | CIRCUIT BREAKER | |
| 3 | 32680-0000 | INDICATOR (ARC) | (ARC IN-521B) |
| 2 | 32880-1000 | LOOP (ARC) | (ARC L-521B-10) |
| 1 | 28340-1500 | RCVR (WITHOUT BFO) | (ARC R-521A-15) |

| WIRE CODE NO | GA | MATERIAL | LG | TERMINALS | | SERIALS |
|---|---|---|---|---|---|---|
| | | | | | | |

WIRE TABLE

CESSNA AIRCRAFT CO. COMMERCIAL AIRCRAFT DIVISION WICHITA, KANSAS

| | NAME | DATE |
|---|---|---|
| DRAWN | BREEN | 8-5-64 |
| PROJ | [illegible] | 8-24-64 |
| CHECK | R. Stuck | 8-25-64 |
| PROJ | K. Wise | 8-29-64 |

TITLE: WIRING DIAGRAM — CESSNA ADF 300 (ARC TYPE 521B)

Cessna.

DWG NO. 1270675

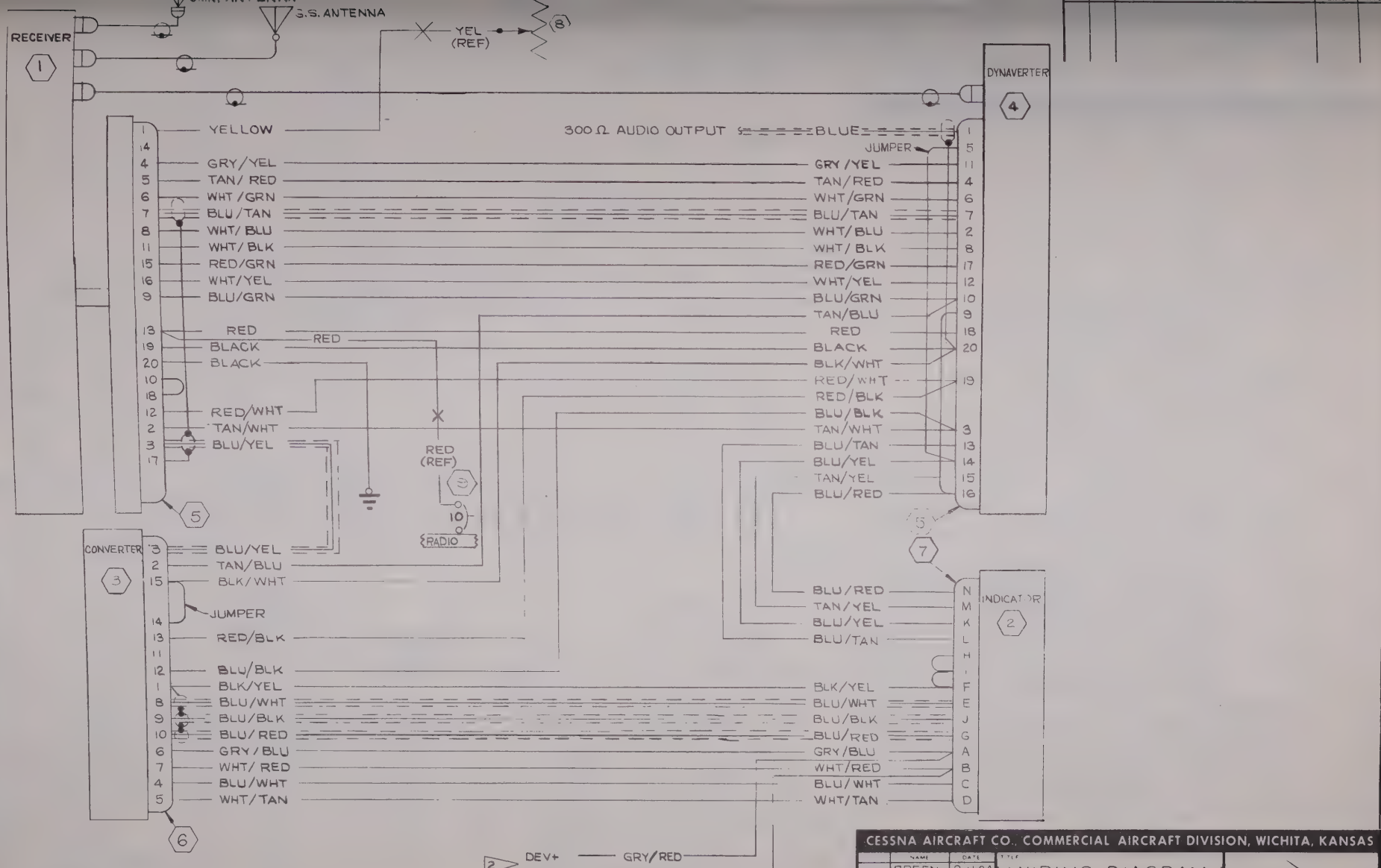


CESSNA AIRCRAFT CO., COMMERCIAL AIRCRAFT DIVISION, WICHITA, KANSAS

| | NAME | DATE |
|---|---|---|
| DRAWN | BREEN | 8-11-64 |
| GROUP | | 9-1-64 |
| CHECK | | 9-2-64 |
| STRESS | | 9-4-64 |
| PRO. | | 9-4-64 |

TITLE: WIRING DIAGRAM CESSNA NAV/OMNI 500 (ARC TYPE 319G)

Cessna.

DWG NO 1270675

REV:

PAGE 2.13.1.1

SUPERSEDED BY

SUPERSEDES 1270625 PAGE 7.18.3

MODEL P206G U206

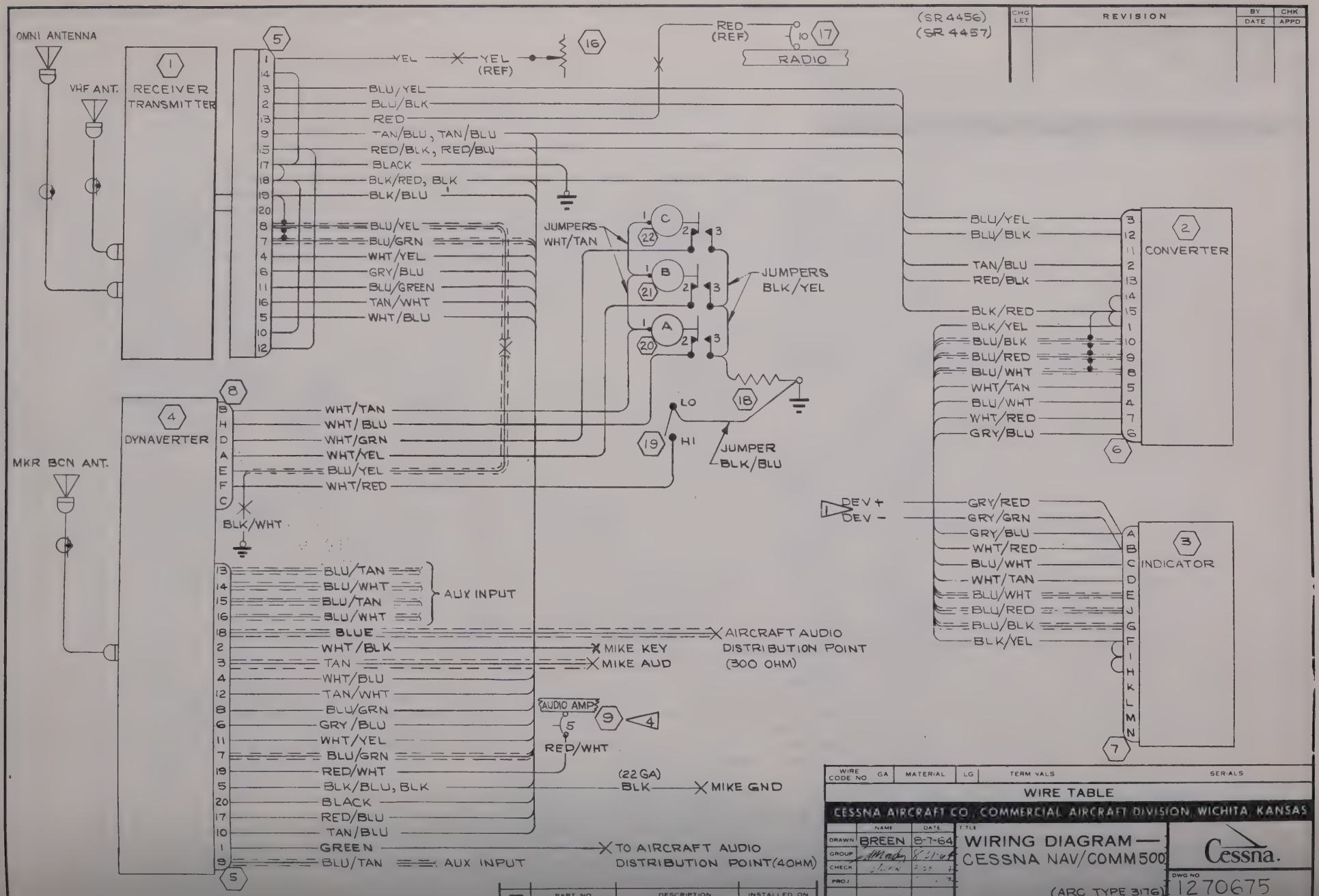
(SR 4456)
(SR 4457)
CHG LET
REVISION
BY
DATE
CHK
APPD
OMNI ANTENNA
VHF ANT.
1 RECEIVER TRANSMITTER
5
YEL
YEL (REF)
16
RED (REF)
10 17
RADIO
BLU/YEL
BLU/BLK
RED
TAN/BLU, TAN/BLU
RED/BLK, RED/BLU
BLACK
BLK/RED, BLK
BLK/BLU
BLU/YEL
BLU/GRN
WHT/YEL
GRY/BLU
BLU/GREEN
TAN/WHT
WHT/BLU
JUMPERS WHT/TAN
C 22
B 21
A 20
JUMPERS BLK/YEL
18
LO
19
HI
JUMPER BLK/BLU
BLU/YEL
BLU/BLK
TAN/BLU
RED/BLK
BLK/RED
BLK/YEL
BLU/BLK
BLU/RED
BLU/WHT
WHT/TAN
BLU/WHT
WHT/RED
GRY/BLU
2 CONVERTER
6
8
4 DYNAVERTER
WHT/TAN
WHT/BLU
WHT/GRN
WHT/YEL
BLU/YEL
WHT/RED
MKR BCN ANT.
BLK/WHT
DEV +
DEV -
GRY/RED
GRY/GRN
GRY/BLU
WHT/RED
BLU/WHT
WHT/TAN
BLU/WHT
BLU/RED
BLU/BLK
BLK/YEL
3 INDICATOR
7
BLU/TAN
BLU/WHT
BLU/TAN
BLU/WHT
AUX INPUT
BLUE
WHT/BLK
MIKE KEY
TAN
MIKE AUD
AIRCRAFT AUDIO DISTRIBUTION POINT (300 OHM)
WHT/BLU
TAN/WHT
BLU/GRN
GRY/BLU
WHT/YEL
BLU/GRN
AUDIO AMP 9 4
5
RED/WHT
RED/WHT
(22 GA) BLK
MIKE GND
BLK/BLU, BLK
BLACK
RED/BLU
TAN/BLU
GREEN
TO AIRCRAFT AUDIO DISTRIBUTION POINT (40HM)
BLU/TAN
AUX INPUT
5
PART NO.
DESCRIPTION
INSTALLED ON
WIRE CODE NO
GA
MATERIAL
LG
TERM VALS
SERIALS
WIRE TABLE
CESSNA AIRCRAFT CO. COMMERCIAL AIRCRAFT DIVISION, WICHITA, KANSAS
NAME
DATE
DRAWN
BREEN
8-7-64
GROUP
CHECK
PROJ
TITLE
WIRING DIAGRAM —
CESSNA NAV/COMM 500
(ARC TYPE 317G)
Cessna.
DWG NO
1270675

(SR4457-9)

| | | | |
|---|---|---|---|
| A | REMOVED YELLOW WIRE FROM PIN 3 OF 26795. ADD BLACK WIRE FROM PIN 3 TO GND. ADD YELLOW WIRE FROM PIN 11 OF 26795 TO RHEOSTAT (SR4456-9) (SR4457-9) | G L W 9-22-64 | |

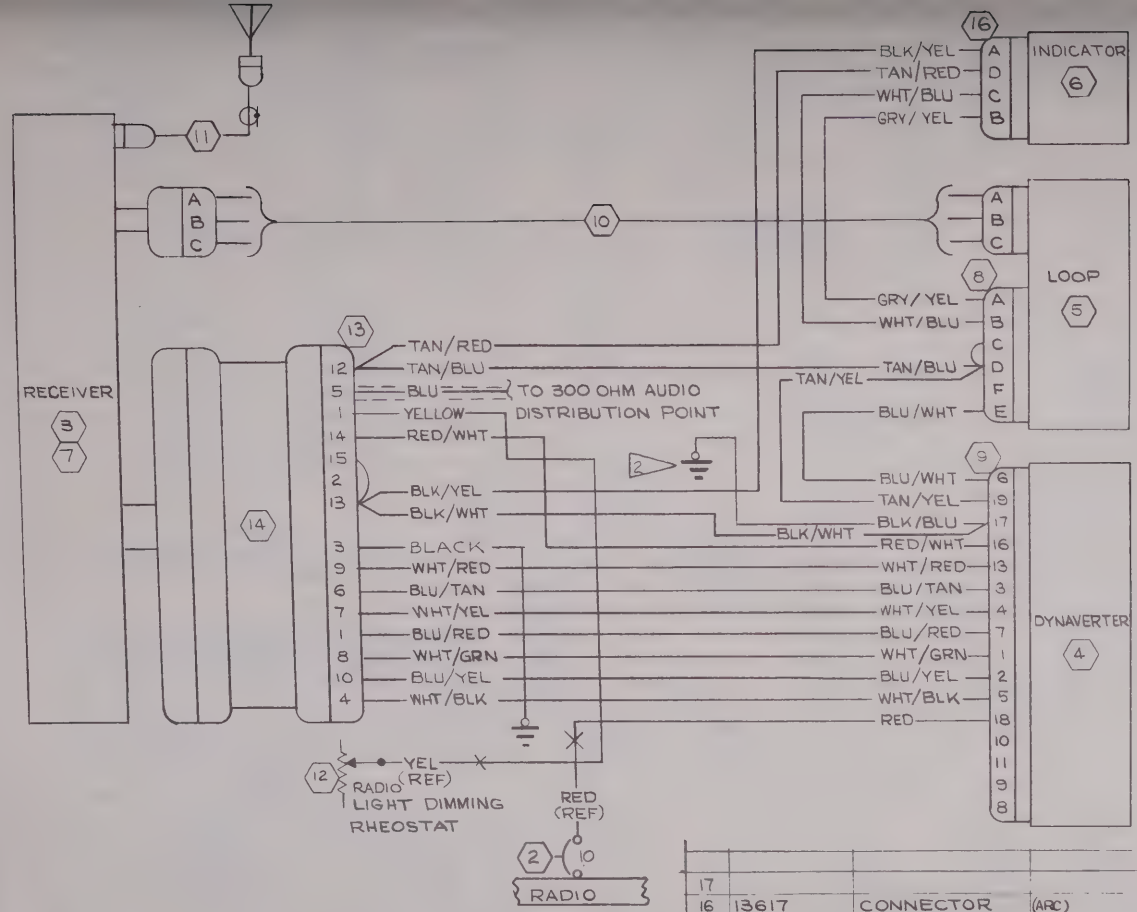


INACTIVE EFF THRU SER P206-0160
SER U206-0437

4-23-65

| WIRE CODE NO. | GA | MATERIAL | LG | TERMINALS | | SERIALS |
|---|---|---|---|---|---|---|
| BLACK | 18 | -18-0 | | S-1367-1-8 | SOLDER | |
| YELLOW | 18 | -18-4 | | S-1370-1 | SOLDER | |
| BLUE | 18 | S-1461-22-6 | | | | |
| BLK/WHT | 18 | -18-0-9 | | SOLDER | | |
| TAN/RED | 22 | -22-10-2 | | | | |
| BLK/YEL | 22 | -22-0-4 | | | | |
| GRY/YEL | 22 | -22-8-4 | | | | |
| WHT/BLU | 22 | -22-9-6 | | | | |
| TAN/BLU | 22 | -22-10-6 | | SOLDER | | |
| RED | 16 | -16-2 | | S-1370-2 | | |
| WHT/BLK | 22 | -22-9-0 | | SOLDER | | |
| BLU/YEL | 22 | -22-6-4 | | | | |
| WHT/GRN | 22 | -22-9-5 | | | | |
| BLU/RED | 22 | -22-6-2 | | | | |
| WHT/YEL | 22 | -22-9-4 | | | | |
| BLU/TAN | 22 | -22-6-10 | | | | |
| WHT/RED | 22 | -22-9-2 | | | | |
| RED/WHT | 18 | -18-2-9 | | | | |
| BLK/BLU | 22 | -22-0-6 | | | SOLDER | |
| TAN/YEL | 22 | -22-10-4 | | | S-1367-18 | |
| BLU/WHT | 22 | -22-6-9 | | SOLDER | SOLDER | |

3 WIRE TABLE

NOTES:
1. INDICATOR & LOOP CONNECTIONS SHOWN ARE FOR TOP MOUNTED LOOP & SENSE ANTENNA.
2. BLK/BLU WIRE TO BE GROUNDED TO AIRFRAME NEAR LOOP BUT NOT CONNECTED TO LOOP.

3 ALL WIRE MATERIAL PER S-1460 EXCEPT AS NOTED.

| ITEM NO | PART NO. | DESCRIPTION | INSTALLED ON |
|---|---|---|---|
| 17 | | | |
| 16 | 13617 | CONNECTOR | (ARC) |
| 15 | | | |
| 14 | 27859 | FILTER ASSY | (ARC) |
| 13 | 26795 | CONNECTOR | (ARC) |
| 12 | R-12½-75-RS34 | RHEOSTAT (TRTA) | |
| 11 | 18637 | SENSE ANT. CABLE | (ARC) |
| 10 | 17985 | LOOP CABLE ASSY | (ARC) |
| 9 | 27881 | CONNECTOR | (ARC) |
| 8 | 19062 | CONNECTOR | (ARC) |
| 7 | 33230-1000 | RECEIVER (WITHOUT BFO) | (ARC R-318G-10) |
| 6 | 27500 | INDICATOR | (ARC IN-318A-1) |
| 5 | 18000 | LOOP | (ARC L-11) |
| 4 | 26969-0014 | DYNAVERTER | (ARC TYPE DV-318A) |
| 3 | 33230-1200 | RECEIVER (WITH BFO) | (ARC TYPE R-318G-12) |
| 2 | S-1360-10 | CIRCUIT BREAKER | |
| 1 | | | |

EQUIPMENT TABLE

CESSNA AIRCRAFT CO., COMMERCIAL AIRCRAFT DIVISION, WICHITA, KANSAS

| | NAME | DATE |
|---|---|---|
| DRAWN | BREEN | 8-10-64 |
| GROUP | | 8-25-64 |
| CHECK | L. Stuck | 8-25-64 |
| PROJ | L. Wise | 8-25-64 |

TITLE: WIRING DIAGRAM — CESSNA ADF 500 (ARC TYPE 318G)

Cessna.

DWG NO. 1270675

| SUPERSEDED BY | SUPERSEDES | MODEL | REV: | PAGE: |
|---|---|---|---|---|
| 1270675 PAGE 2.29.1 | 1270625 PAGE 17.4.1 | P206 & U206 | A | 2.15.1 |

FORM NO. 80-161

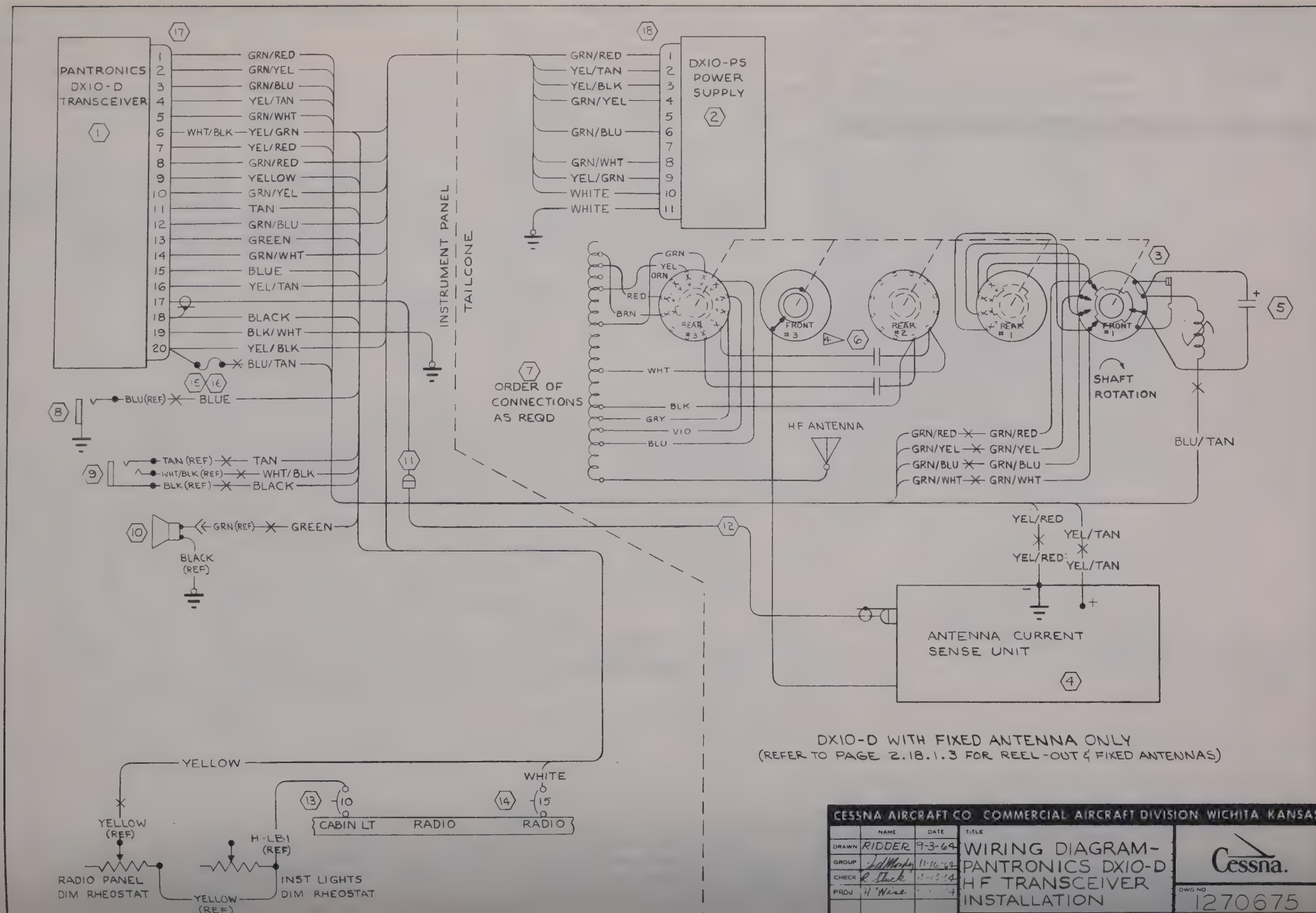
PANTRONICS DX10-D TRANSCEIVER
DX10-PS POWER SUPPLY
INSTRUMENT PANEL
TAILCONE
ORDER OF CONNECTIONS AS REQD
HF ANTENNA
SHAFT ROTATION
ANTENNA CURRENT SENSE UNIT
GRN/RED
GRN/YEL
GRN/BLU
YEL/TAN
GRN/WHT
WHT/BLK
YEL/GRN
YEL/RED
YELLOW
TAN
GREEN
BLUE
BLACK
BLK/WHT
YEL/BLK
BLU/TAN
BLU(REF)
TAN (REF)
WHT/BLK (REF)
BLK (REF)
GRN(REF)
BLACK (REF)
YEL/BLK
WHITE
GRN
ORN
RED
BRN
WHT
BLK
GRY
VIO
BLU
REAR #3
FRONT #3
REAR #2
REAR #1
FRONT #1
YEL/RED
YEL/TAN
YELLOW
YELLOW (REF)
H-LB1 (REF)
CABIN LT
RADIO
RADIO PANEL DIM RHEOSTAT
INST LIGHTS DIM RHEOSTAT
DX10-D WITH FIXED ANTENNA ONLY
(REFER TO PAGE 2.18.1.3 FOR REEL-OUT & FIXED ANTENNAS)
CESSNA AIRCRAFT CO. COMMERCIAL AIRCRAFT DIVISION WICHITA KANSAS
NAME
DATE
DRAWN RIDDER 9-3-64
GROUP
CHECK
PROJ
TITLE
WIRING DIAGRAM-PANTRONICS DX10-D HF TRANSCEIVER INSTALLATION
Cessna.
DWG NO 1270675

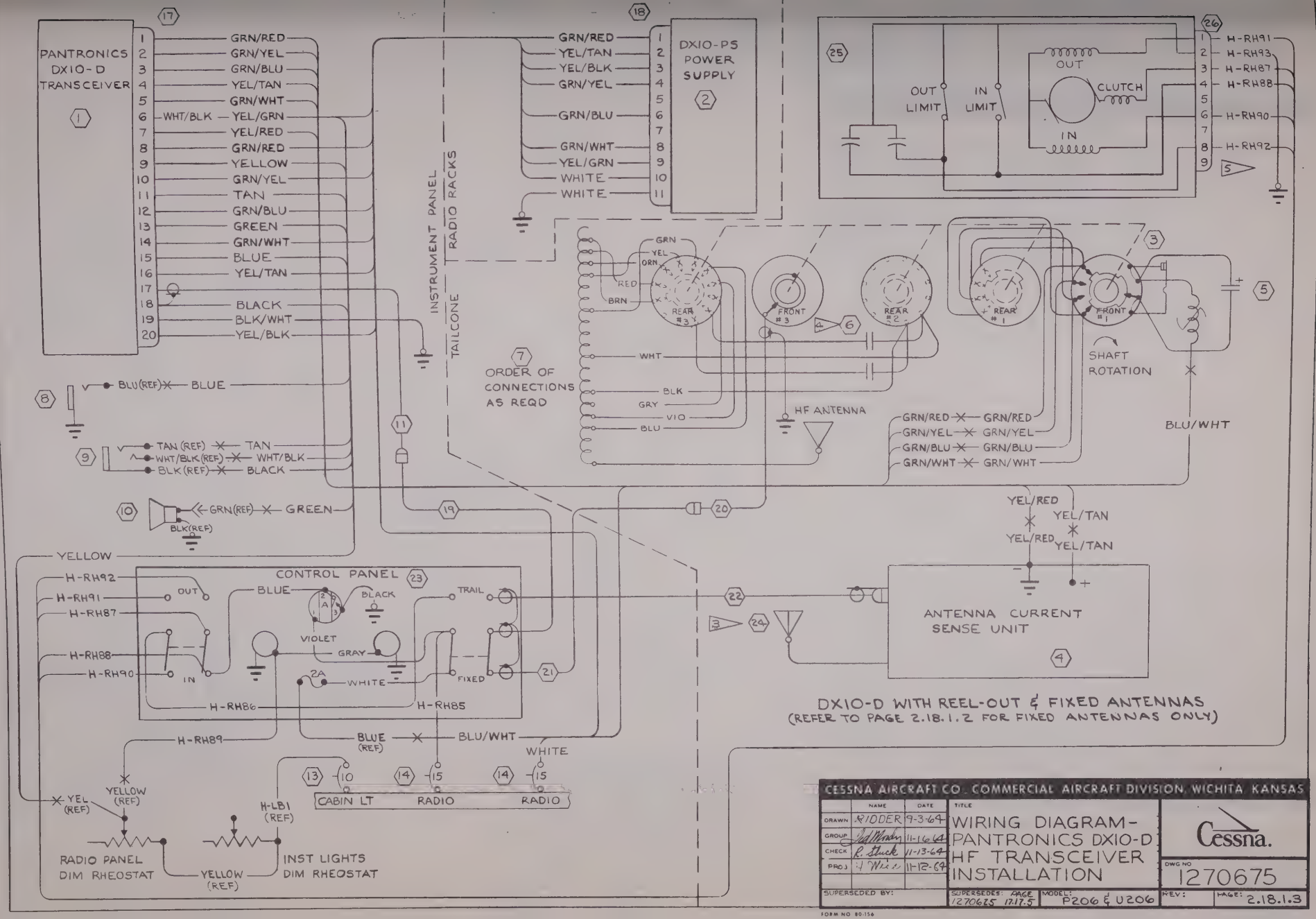


DX10-D WITH REEL-OUT & FIXED ANTENNAS
(REFER TO PAGE 2.18.1.2 FOR FIXED ANTENNAS ONLY)

CESSNA AIRCRAFT CO. COMMERCIAL AIRCRAFT DIVISION, WICHITA KANSAS

| | NAME | DATE |
|---|---|---|
| DRAWN | RIDDER | 9-3-69 |
| GROUP | Ed Mosby | 11-16-64 |
| CHECK | R. Stuck | 11-13-64 |
| PROJ | J. Wilson | 11-12-69 |

SUPERSEDED BY:

TITLE: WIRING DIAGRAM- PANTRONICS DX10-D HF TRANSCEIVER INSTALLATION

Cessna.

DWG NO 1270675

SUPERSEDES: PAGE 1270685 17.17.5

MODEL: P206 & U206

REV:

PAGE: 2.18.1.3

FORM NO 80-156

(SR4456)
(SR4457)

| CHG LET | REVISION | BY / DATE | CHK / APPD |
|---|---|---|---|
| | | | |

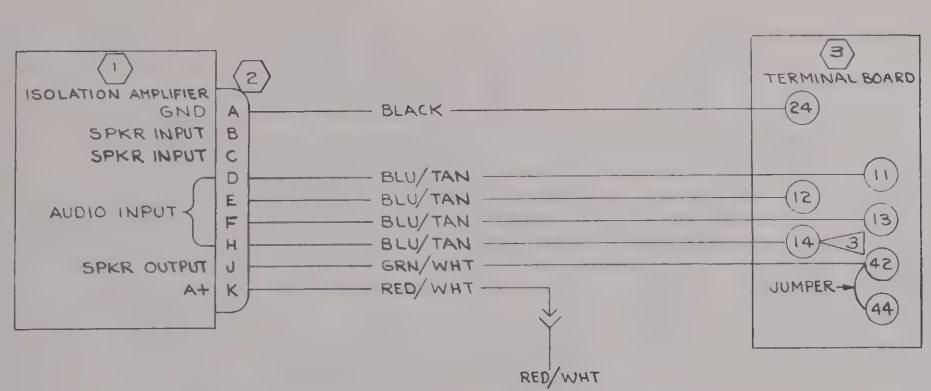


Inactive (EARLY 1966 & ON)
(SR4938) & ON
GLW 10-26-65
H&W 11-24-65
RRS 11-30-65
TM
NMC 12-6-65

NOTES:

1. WIRE MATERIAL PER S-1460.
2. CONNECTOR IS FURNISHED WITH KA-10 AMP.
3. WHEN MKR BCN (ARC R-502B) IS INSTL, BLUE/TAN WIRE CONNECTS TO TERMINAL 15 ON TERMINAL BOARD.
4. TERMINAL BLOCK NUMBERS TO BE STAMPED ON WIRE PER CES 1015.

| WIRE CODE NO | GA | MATERIAL | LG | TERMINALS | | | SERIALS |
|---|---|---|---|---|---|---|---|
| RED/WHT | 18 | -18-2-9 | | S-341-2 | S-1367-1-6 | | |
| RED/WHT | 18 | -18-2-9 | | SOLDER | S-341-2 | | |
| GRN/WHT | 20 | -20-5-9 | | SOLDER | S-1367-1-8 | | |
| BLU/TAN | 22 | -22-6-10 | | SOLDER | S-1367-1-8 | | |
| BLU/TAN | 22 | -22-6-10 | | SOLDER | S-1367-1-8 | | |
| BLU/TAN | 22 | -22-6-10 | | SOLDER | S-1367-1-8 | | |
| BLU/TAN | 22 | -22-6-10 | | SOLDER | S-1367-1-8 | | |
| BLACK | 22 | -22-0 | | SOLDER | S-1367-1-8 | | |

1 WIRE TABLE

| | PART NO. | DESCRIPTION | INSTALLED ON |
|---|---|---|---|
| 4 | S-1360-5 | CIRCUIT BREAKER | |
| 3 | 0770714-1 | TERMINAL BOARD | |
| 2 | 126-222 | CONNECTOR (AMBE) | |
| 1 | KA-10 | ISOLATION AMP | (KG) |

CESSNA AIRCRAFT CO., COMMERCIAL AIRCRAFT DIVISION, WICHITA, KANSAS

| | NAME | DATE |
|---|---|---|
| DRAWN | RIDDER | 9-18-64 |
| GROUP | Ted Moody | 9-29-64 |
| CHECK | R. Stuck | 28-64 |
| PROJ | [illegible] | [illegible] |

TITLE: WIRING DIAGRAM — KING KA-10 ISOLATION AMPLIFIER

Cessna.

DWG NO 1270675

NOTES:
1. ITEMS 6, 7, & 8 ARE SUPPLIED AS PART OF KN-60 INSTL KIT NO. 050-1052-00.

| CHG LET | REVISION | BY DATE | CHK APPD |
|---|---|---|---|

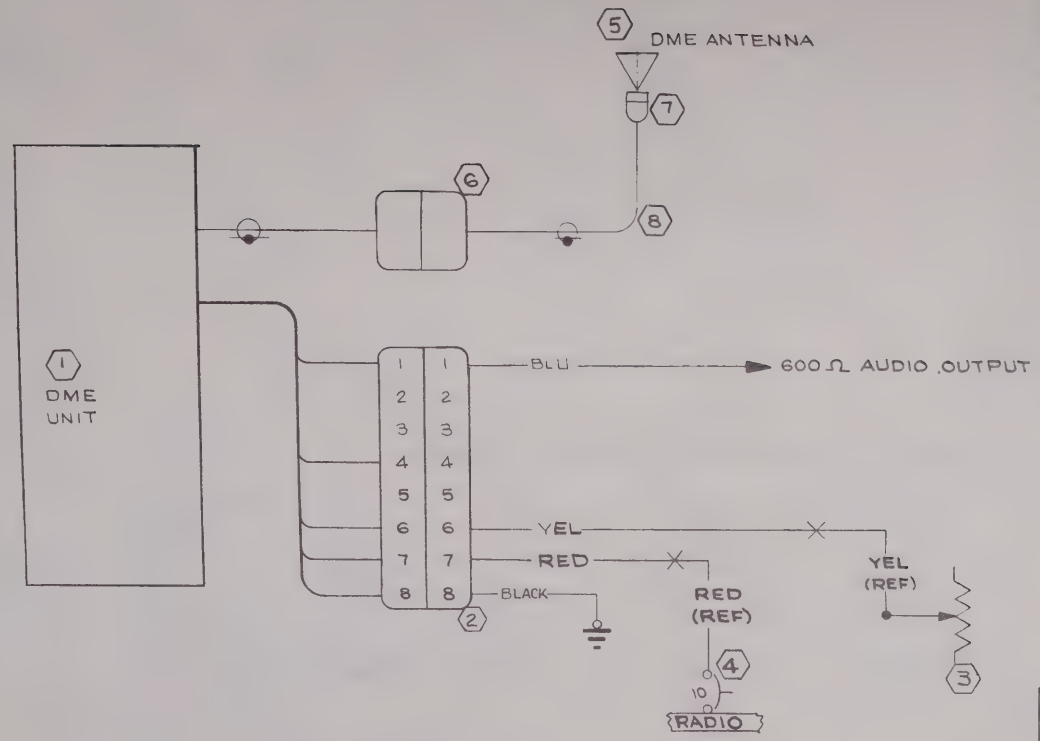


| ITEM NO | PART NO | DESCRIPTION | INSTALLED ON |
|---|---|---|---|
| 8 | 024-0001-00 | R.F. CABLE (KG) | |
| 7 | 030-24-00 | CONNECTOR RT ANGLE (KG) | |
| 6 | 030-0021-01 | CONNECTOR (KG) | |
| 5 | KA-15 | ANTENNA (KG) | |
| 4 | S-1360-10 | CIRCUIT BKR | |
| 3 | R12½-75-RS34 | RHEOSTAT (TRTA) | |
| 2 | 030-2043-00 | CONNECTOR (KG) | |
| 1 | KN-60 | DME UNIT (KG) | |

EQUIPMENT TABLE

| WIRE CODE NO. | GA | MATERIAL | LG | TERMINALS | | | SERIALS |
|---|---|---|---|---|---|---|---|
| BLU | 22 | -22-6 | | SOLDER | | | |
| RED | 16 | -16-2 | | | S-1370-2 | | |
| YEL | 18 | -18-4 | | | S-1370-1 | | |
| BLACK | 16 | -16-0 | | SOLDER | S-1367-2-8 | | |

WIRE TABLE

CESSNA AIRCRAFT CO., COMMERCIAL AIRCRAFT DIVISION, WICHITA, KANSAS

| | NAME | DATE |
|---|---|---|
| DRAWN | BREEN | 9-30-64 |
| GROUP | Jack Mosby | 11-4-64 |
| CHECK | R Stuck | 11-21-64 |
| PROJ | | |
| | N Wiard | 11-2-64 |

TITLE: WIRING DIAGRAM — KING KN-60 DME

Cessna.

DWG NO. 1270675

| SUPERSEDED BY | SUPERSEDES | MODEL | REV. | PAGE |
|---|---|---|---|---|
| | | P206 & U206 | | 2.20.1 |

FORM NO. 80-161

| CHG LET | REVISION | BY DATE | CHK APPD |
|---|---|---|---|
| | SEE PG. 2.21.1 | | |

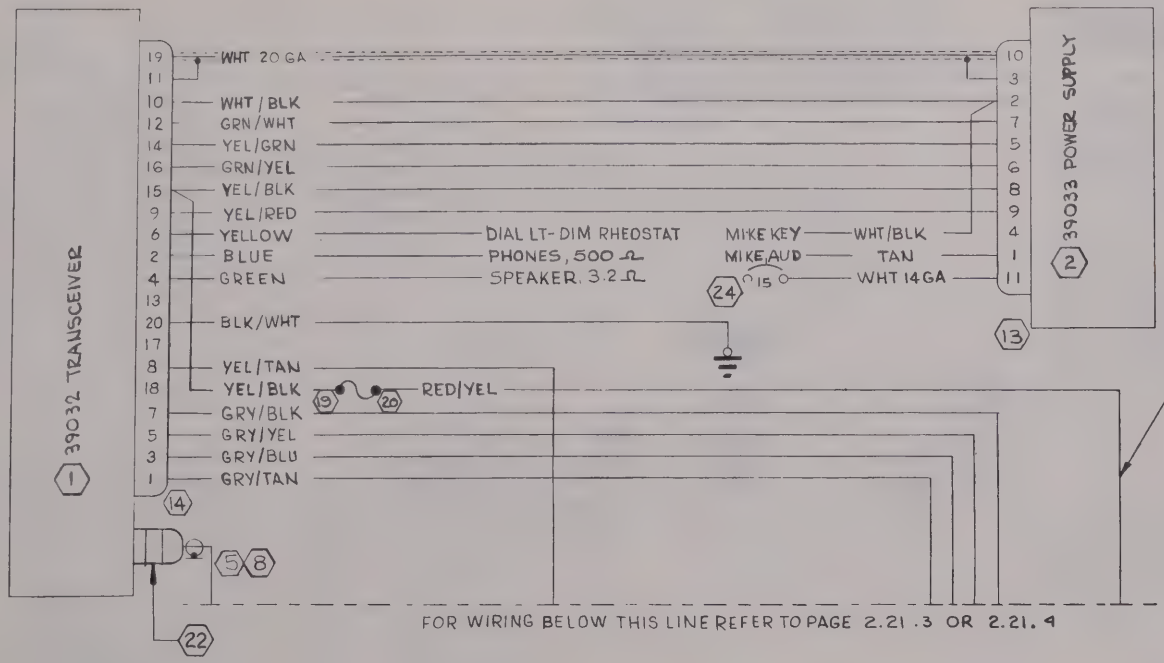


| WIRE CODE NO. | GA | MATERIAL | LG | TERMINALS | | SERIALS |
|---|---|---|---|---|---|---|
| | | | | | | |

WIRE TABLE

| PART NO. | DESCRIPTION | INSTALLED ON |
|---|---|---|
| | | |

CESSNA AIRCRAFT CO. COMMERCIAL AIRCRAFT DIVISION WICHITA KANSAS

| | NAME | DATE |
|---|---|---|
| DRAWN | G. WOOD | 10-16-64 |
| GROUP | Ed Mosby | 11-16-64 |
| CHECK | R. Stuck | 11-11-64 |
| PROJ | H. Wren | 11-16-64 |

TITLE: WIRING DIAGRAM — PANTRONICS DX10-DA

Cessna.

DWG NO. 1270675

| LET | REVISION | DATE | APPD |
|---|---|---|---|
| | SEE PG. 2.21.1 | | |

FOR WIRING ABOVE THIS LINE REFER TO PAGE 2.21.2

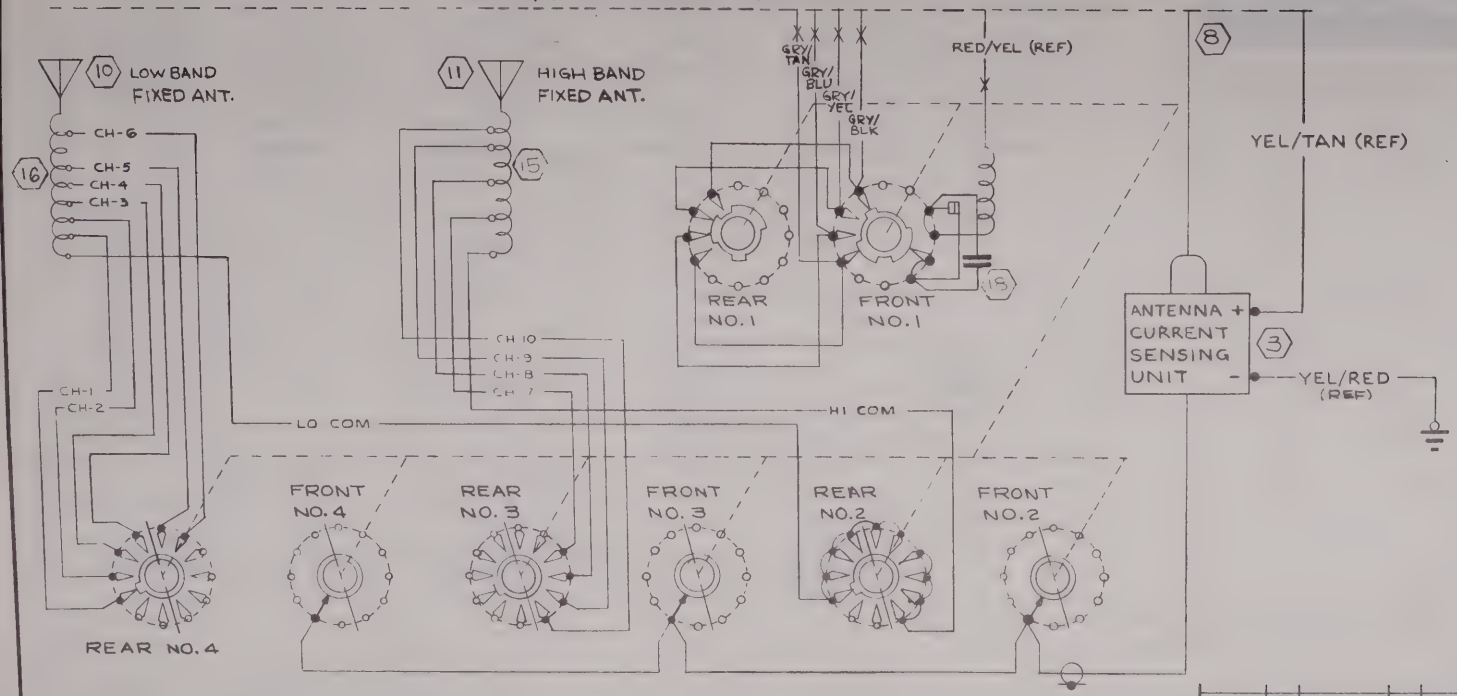


17 SWITCH
(SHOWN IN CHANNEL 1 POS)
(WAFFERS SHOWN AS VIEW FROM MOTOR SIDE)

| WIRE CODE NO. | GA | MATERIAL | LG | TERMINALS | | SERIALS |
|---|---|---|---|---|---|---|
| | | | | | | |

WIRE TABLE

| ITEM NO. | PART NO. | DESCRIPTION | INSTALLED ON |
|---|---|---|---|
| | | | |

EQUIPMENT TABLE

CESSNA AIRCRAFT CO COMMERCIAL AIRCRAFT DIVISION WICHITA KANSAS

| | NAME | DATE |
|---|---|---|
| DRAWN | G WOOD | 10-7-64 |
| GROUP | [illegible] | 11-16-64 |
| CHECK | R. Stuck | 11-11-64 |
| PROJ | [illegible] | 11-16-64 |

TITLE: WIRING DIAGRAM — PANTRONICS DX10-DA

Cessna.

DWG NO. 1270675

| SUPERSEDED BY | SUPERSEDES | MODEL | REV | PAGE |
|---|---|---|---|---|
| | | P206-U206 | C | 2.21.3 |

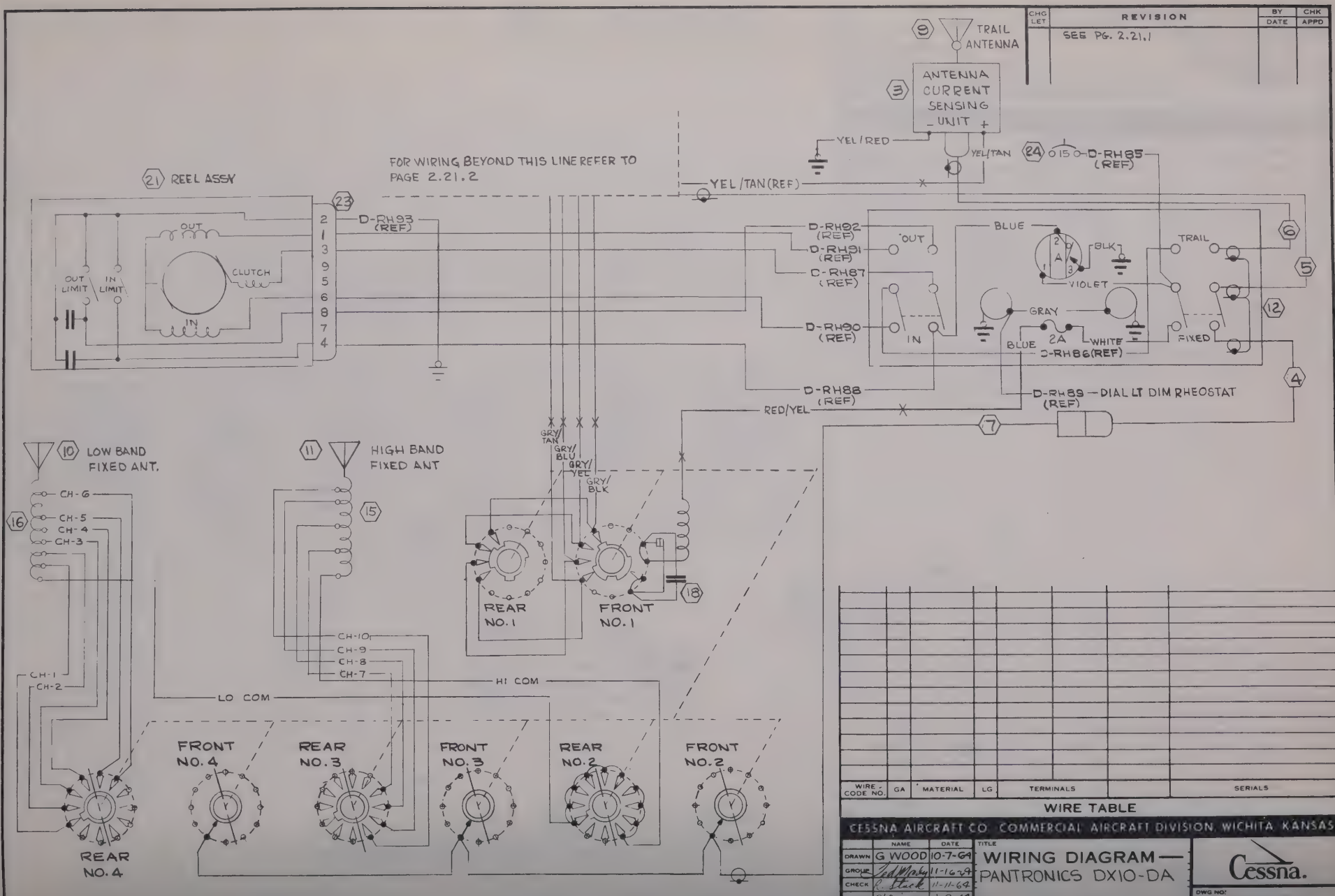


| CHG LET | REVISION | BY DATE | CHK APPD |
|---|---|---|---|
| | SEE PG. 2.21.1 | | |

| PART NO. | DESCRIPTION | INSTALLED ON |
|---|---|---|

| WIRE CODE NO. | GA | MATERIAL | LG | TERMINALS | SERIALS |
|---|---|---|---|---|---|

WIRE TABLE

CESSNA AIRCRAFT CO. COMMERCIAL AIRCRAFT DIVISION, WICHITA KANSAS

| | NAME | DATE |
|---|---|---|
| DRAWN | G WOOD | 10-7-64 |
| GROUP | Ted Marks | 11-16-64 |
| CHECK | R. Stuck | 11-11-64 |
| PROJ | K Wren | 1-7-64 |

TITLE: WIRING DIAGRAM — PANTRONICS DX10-DA

Cessna.

DWG NO: 1270675

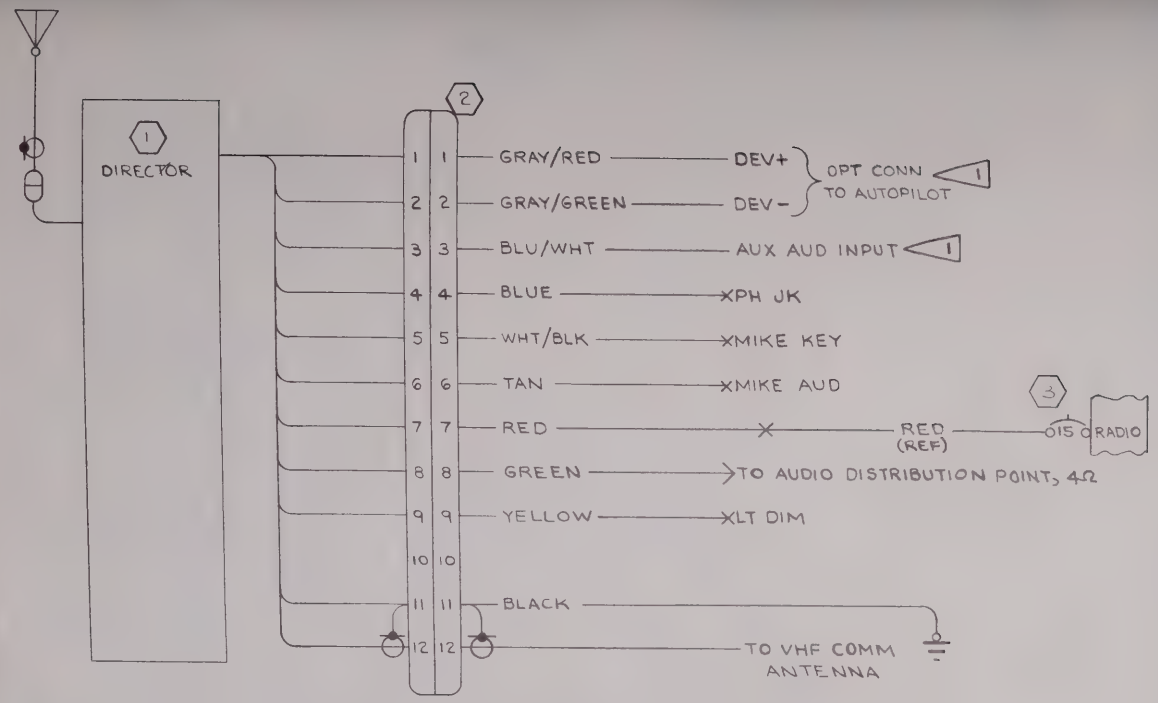


NOTES:

1. S-1557-1 CAP REPLACED WITH S-1367-1-8 TERMINAL WHEN COMBINED WITH OTHER RADIOS.
2. THE KX-150B & KX-150BE ARE ELECTRICALLY & MECHANICALLY INTERCHANGEABLE WITH KX-150A & KX-150AE.

| WIRE CODE NO | GA | MATERIAL | LG | TERMINALS | | SERIALS |
|---|---|---|---|---|---|---|
| GRY/RED | 22 | S-1460-22-8-2 | | SOLDER | S-1557-1 | |
| GRY/GRN | 22 | S-1460-22-8-5 | | | S-1557-1 | |
| BLU/WHT | 22 | S-1460-22-6-9 | | | S-1557-1 | |
| BLACK | 16 | S-1460-16-0 | | | S-1367-2-8 | |
| RED | 16 | S-1460-16-2 | | | S-1370-2 | |
| YELLOW | 18 | S-1460-18-4 | | | S-1370-1 | |
| WHT/BLK | 22 | S-1460-22-9-0 | | | S-1370-1 | |
| TAN | 22 | S-1460-22-10 | | | S-1370-1 | |
| GREEN | 20 | S-1460-20-5 | | | S-341-2 | |
| BLUE | 22 | S-1460-22-6 | | SOLDER | S-1370-1 | |

WIRE TABLE

| ITEM NO | PART NO. | DESCRIPTION | INSTALLED ON |
|---|---|---|---|
| 3 | S-1360-15 | CIRCUIT BREAKER | |
| 2 | 0501046-01 | INSTL KIT (KG) | |
| 1 | KX-150B | DIRECTOR (KG) | |

EQUIPMENT TABLE

CESSNA AIRCRAFT CO., COMMERCIAL AIRCRAFT DIVISION, WICHITA, KANSAS

| | NAME | DATE |
|---|---|---|
| DRAWN | KILDER | 11-13-64 |
| GROUP | [illegible] | 11-4-64 |
| CHECK | R. Stuck | 11-24-64 |
| PROJ | H. Wind | 11-29-64 |

TITLE: WIRING DIAGRAM— KING KX-150B OR KX-150BE

Cessna®

DWG NO: 1270675

REV: A

PAGE: 2.24.1

SUPERSEDED BY:

SUPERSEDES: 1270625 PAGE 17.15.2

MODEL: P206 & U206

FORM NO 80 1614

NOTE :

1. CONNECTORS ARE PART OF NARCO CONNECTOR KIT EL-2052. KIT EL-2052 NOT SUPPLIED WITH MARK 12 INSTL KIT.
2. NARCO PLUG NO. K-4111G-1 SUPPLIED WITH MARK 12 INSTL KIT.
3. MS3106A-20-27S PLUG & MS3057-12 CLAMP SUPPLIED WITH VOA-4 OR VOA-5 INDICATOR.
4. WIRE MATERIAL PER S-1460 EXCEPT AS NOTED.

| CHG LET | REVISION | BY DATE | CHK APPD |
|---|---|---|---|
| | | | |

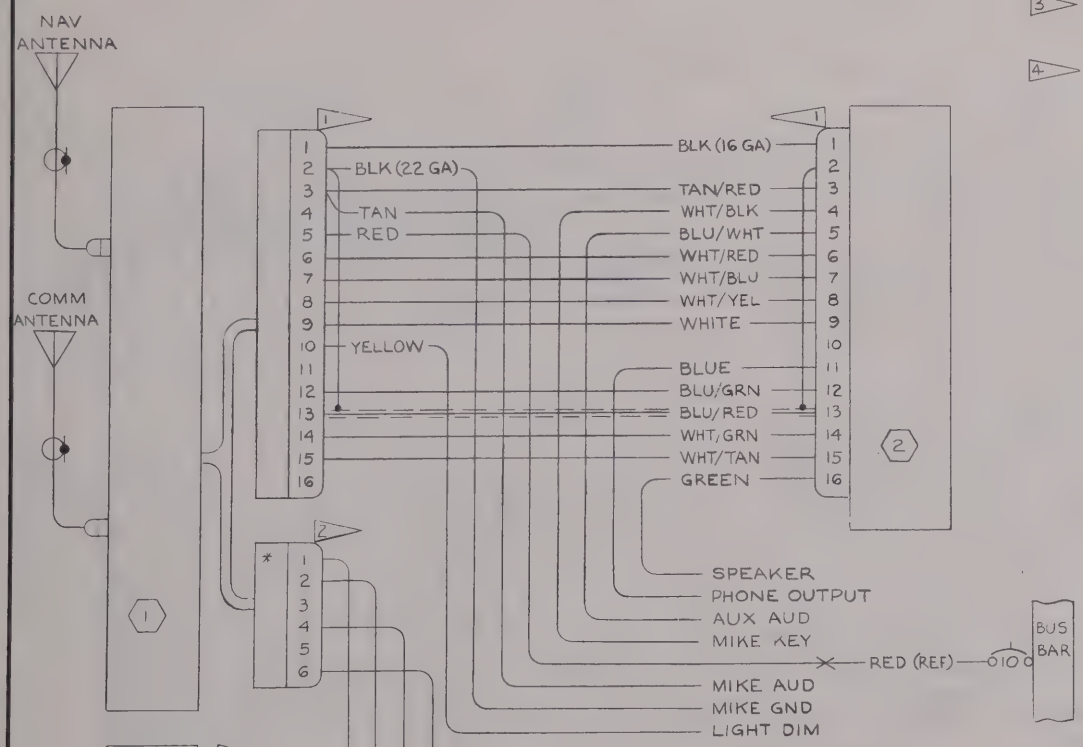


| | | | | | | | | |
|---|---|---|---|---|---|---|---|---|
| GREEN | 20 | -20-5 | | SOLDER | | | | |
| GRY/BLU | 22 | -22-8-6 | | | SOLDER | | | |
| GRY/YEL | 22 | -22-8-4 | | | SOLDER | | | |
| GRY/GRN | 22 | -22-8-5 | | | S-1557-1 | | | |
| GRY/RED | 22 | -22-8-2 | | | S-1557-1 | | | |
| RED/YEL | 22 | -22-2-4 | | | SOLDER | | | |
| BLK/YEL | 22 | -22-0-4 | | | SOLDER | | | |
| BLACK | 22 | -22-0 | | | | | | |
| TAN | 22 | -22-10 | | | | | | |
| WHT/TAN | 22 | -22-9-10 | | | SOLDER | | | |
| WHT/GRN | 22 | -22-9-5 | | | SOLDER | | | |
| BLU/RED | 22S | S-1461-22-6-2 | | | SOLDER | | | |
| BLU/GRN | 22 | -22-6-5 | | | SOLDER | | | |
| BLUE | 22 | -22-6 | | | | | | |
| WHT/YEL | 22 | -22-9-4 | | | SOLDER | | | |
| WHT/BLU | 22 | -22-9-6 | | | SOLDER | | | |
| WHT/RED | 22 | -22-9-2 | | | SOLDER | | | |
| BLU/WHT | 22 | -22-6-9 | | | S-1557-1 | | | |
| WHT/BLK | 22 | -22-9-0 | | | | | | |
| TAN/RED | 22 | -22-10-2 | | | SOLDER | | | |
| YELLOW | 18 | -18-4 | | | | | | |
| RED | 16 | -16-2 | | | S-1376-2 | | | |
| BLACK | 16 | -16-0 | | | SOLDER | | | |
| WHITE | 14 | -14-3 | | SOLDER | SOLDER | | | |
| WIRE CODE NO. | GA | MATERIAL | LG | TERMINALS | | | | SERIALS |

4 WIRE TABLE

| | | |
|---|---|---|
| 6 | | |
| 5 | VOA-6 | CONVERTOR-IND (NARO) |
| 4 | VOA-5 | CONVERTOR-IND (NARO) |

CESSNA AIRCRAFT CO., COMMERCIAL AIRCRAFT DIVISION, WICHITA, KANSAS

| | NAME | DATE |
|---|---|---|
| DRAWN | G WOOD | 2-8-64 |

TITLE: WIRING DIAGRAM

C

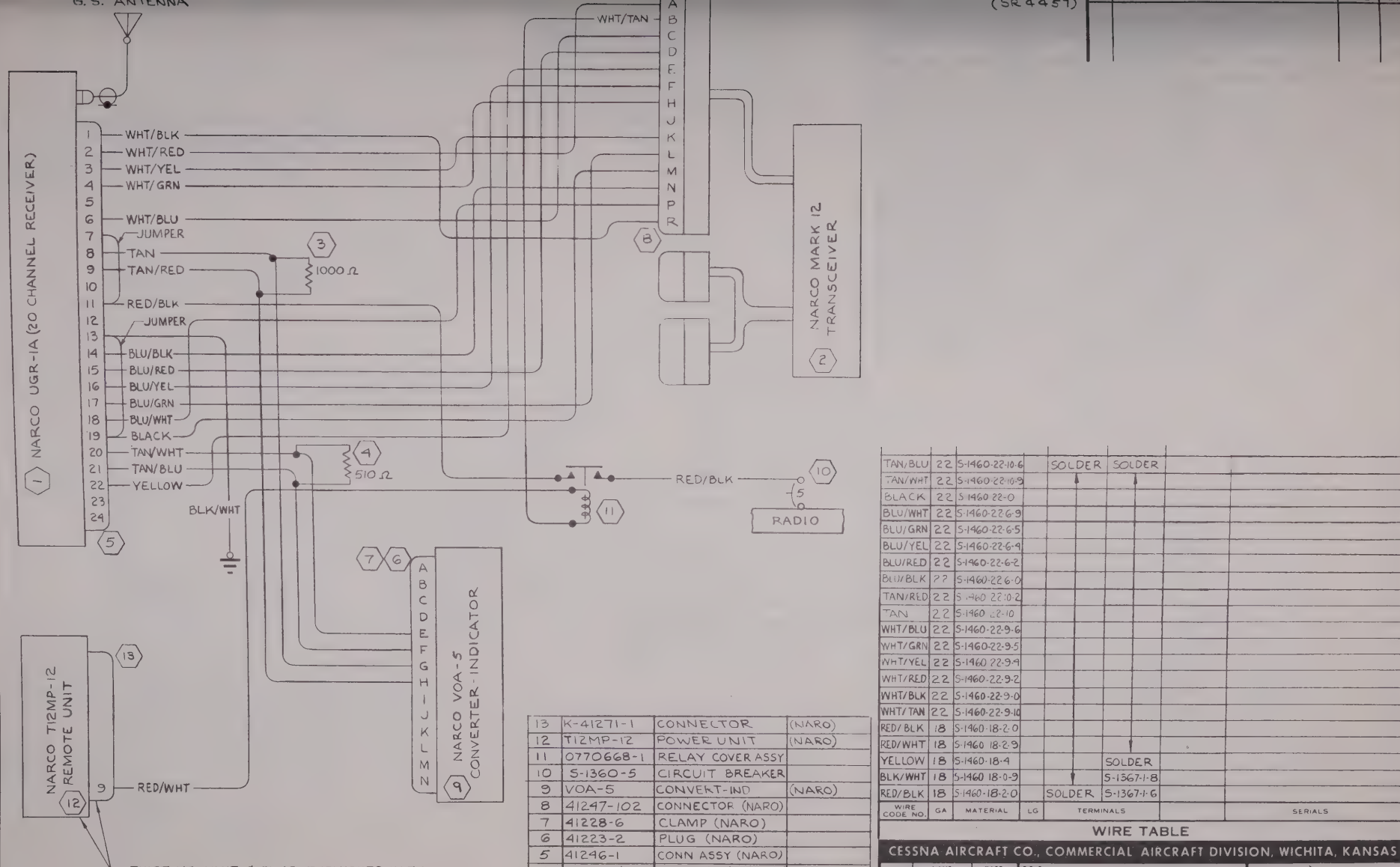


| TEM NO | PART NO. | DESCRIPTION | INSTALLED ON |
|---|---|---|---|
| 13 | K-41271-1 | CONNECTOR | (NARO) |
| 12 | T12MP-12 | POWER UNIT | (NARO) |
| 11 | 0770668-1 | RELAY COVER ASSY | |
| 10 | S-1360-5 | CIRCUIT BREAKER | |
| 9 | VOA-5 | CONVERT-IND | (NARO) |
| 8 | 41247-102 | CONNECTOR (NARO) | |
| 7 | 41228-6 | CLAMP (NARO) | |
| 6 | 41223-2 | PLUG (NARO) | |
| 5 | 41246-1 | CONN ASSY (NARO) | |
| 4 | 510Ω ±5% ½ WATT | RESISTOR (OM) "LITTLE DEVIL" | |
| 3 | 1000Ω ±10% ½ WATT | RESISTOR (OM) "LITTLE DEVIL" | |
| 2 | MARK 12 | TRANSCEIVER | (NARC) |
| 1 | UGR-1A 20 CH | RECEIVER (NARO) | |

EQUIPMENT TABLE

| WIRE CODE NO. | GA | MATERIAL | LG | TERMINALS | | SERIALS |
|---|---|---|---|---|---|---|
| TAN/BLU | 22 | S-1460-22-10-6 | | SOLDER | SOLDER | |
| TAN/WHT | 22 | S-1460-22-10-9 | | | | |
| BLACK | 22 | S-1460 22-0 | | | | |
| BLU/WHT | 22 | S-1460-22-6-9 | | | | |
| BLU/GRN | 22 | S-1460-22-6-5 | | | | |
| BLU/YEL | 22 | S-1460-22-6-4 | | | | |
| BLU/RED | 22 | S-1460-22-6-2 | | | | |
| BLU/BLK | 22 | S-1460-22-6-0 | | | | |
| TAN/RED | 22 | S-1460 22-10-2 | | | | |
| TAN | 22 | S-1460 22-10 | | | | |
| WHT/BLU | 22 | S-1460-22-9-6 | | | | |
| WHT/GRN | 22 | S-1460-22-9-5 | | | | |
| WHT/YEL | 22 | S-1460 22-9-4 | | | | |
| WHT/RED | 22 | S-1460-22-9-2 | | | | |
| WHT/BLK | 22 | S-1460-22-9-0 | | | | |
| WHT/TAN | 22 | S-1460-22-9-10 | | | | |
| RED/BLK | 18 | S-1460-18-2-0 | | | | |
| RED/WHT | 18 | S-1460 18-2-9 | | | | |
| YELLOW | 18 | S-1460-18-4 | | | SOLDER | |
| BLK/WHT | 18 | S-1460 18-0-9 | | | S-1367-1-8 | |
| RED/BLK | 18 | S-1460-18-2-0 | | SOLDER | S-1367-1-6 | |

WIRE TABLE

CESSNA AIRCRAFT CO., COMMERCIAL AIRCRAFT DIVISION, WICHITA, KANSAS

| | NAME | DATE |
|---|---|---|
| DRAWN | RIDDER | 11-21-64 |
| GROUP | [illegible] | 1-9-65 |
| CHECK | R. Stuck | 1-6-65 |
| PROJ | H. Wise | 1-5-65 |

TITLE: WIRING DIAGRAM — NARCO UGR-1A GLIDESLOPE WITH NARCO MARK 12 & VOA-5

Cessna.

DWG NO. 1270675

SUPERSEDED BY | SUPERSEDES 1270625 PAGE 17.24 | MODEL P206 & U206 | REV: | PAGE 2.26.1

FORM NO. 80-161

| CHG LET | REVISION | BY DATE | CHK APPD |
|---|---|---|---|
| | | | |

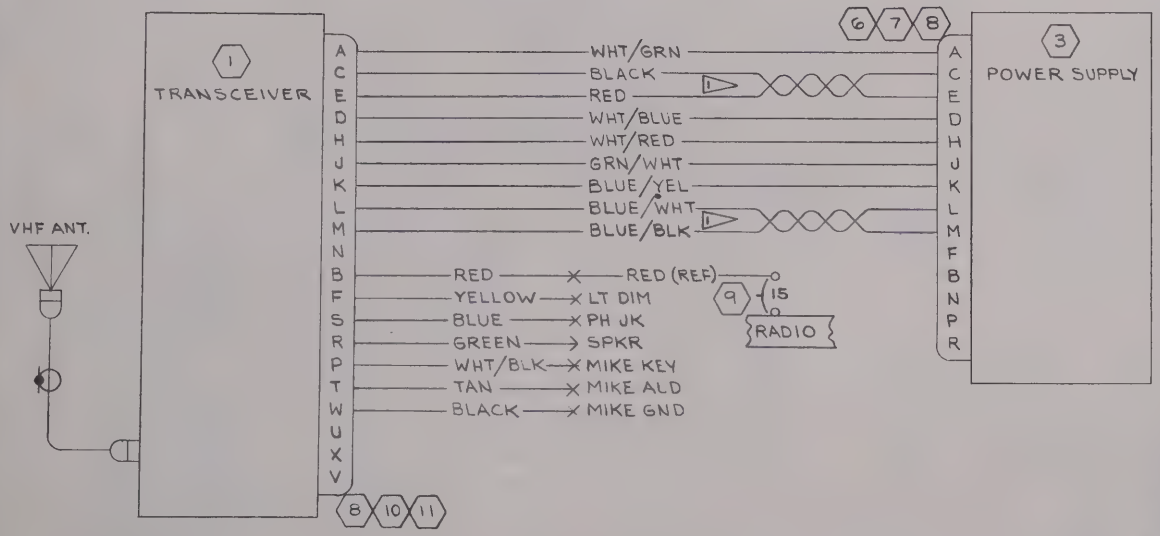


NOTES:

1. WIRES FLAGGED THUS TO BE TWISTED TOGETHER TO FORM A TWISTED PAIR.
2. WIRE MATERIAL PER S-1460.

| | | | |
|---|---|---|---|
| 11 | 030-1010-00 | HOOD (KG) | |
| 10 | 030-2002-00 | RECEPTACLE (KG) | |
| 9 | S-1360-15 | CIRCUIT BREAKER | |
| 8 | 030-1008-00 | LEVER & PIVOT ASSY (KG) | |
| 7 | 030-1009-00 | HOOD (KG) | |
| 6 | 030-2000-00 | RECEPTACLE (KG) | |
| 5 | | | |

| WIRE CODE NO. | GA | MATERIAL | LG | TERMINALS | | SERIALS |
|---|---|---|---|---|---|---|
| BLACK | 22 | -22-0 | | SOLDER | S-1370-1 | |
| TAN | 22 | -22-10 | | | S-1370-1 | |
| WHT/BLK | 22 | -22-9-0 | | | S-1370-1 | |
| GREEN | 20 | -20-5 | | | S-341-2 | |
| BLUE | 22 | -22-6 | | | S-1370-1 | |
| YELLOW | 18 | -18-4 | | | S-1370-1 | |
| RED | 16 | -16-2 | | | S-1370-2 | |
| BLU/BLK | 22 | -22-6-0 | | | SOLDER | |
| BLU/WHT | 22 | -22-6-9 | | | | |
| BLU/YEL | 22 | -22-6-4 | | | | |
| GRN/WHT | 20 | -20-5-9 | | | | |
| WHT/RED | 22 | -22-9-2 | | | | |
| WHT/BLU | 22 | -22-9-6 | | | | |
| RED | 16 | -16-2 | | | | |
| BLACK | 16 | -16-0 | | | | |
| WHT/GRN | 22 | -22-9-5 | | SOLDER | SOLDER | |

2 WIRE TABLE

CESSNA AIRCRAFT CO. COMMERCIAL AIRCRAFT DIVISION, WICHITA, KANSAS

| NAME | DATE | TITLE |
|---|---|---|
| | | |

BOTTOM - MOUNTED LOOP ANTENNA &
TOP - MOUNTED SENSE ANTENNA.

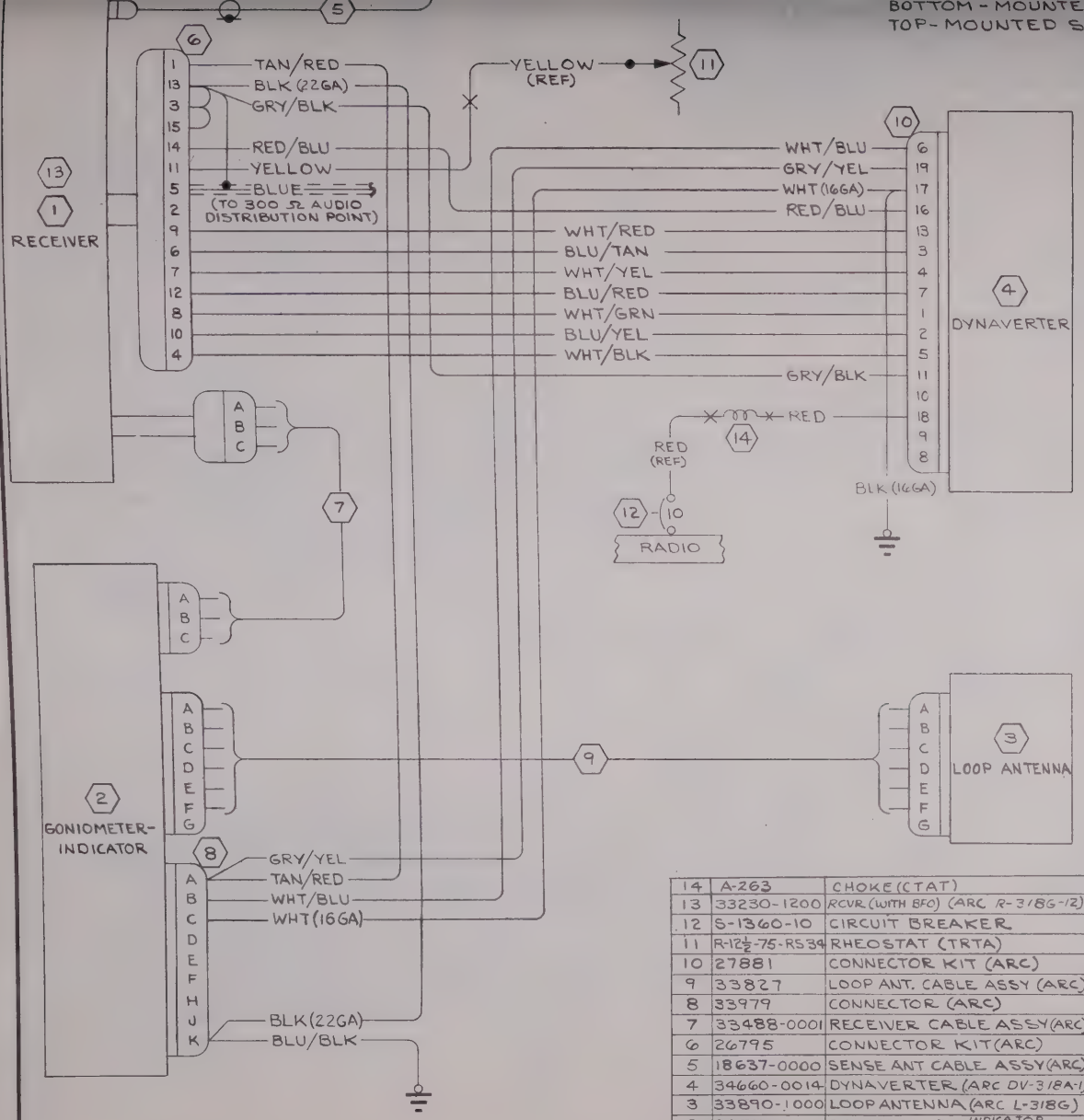


| | | | | | | | |
|---|---|---|---|---|---|---|---|
| BLACK | 16 | -16-0 | | SOLDER | S-1367-2-8 | | |
| RED | 16 | -16-2 | | | S-1370-2 | | |
| WHT/BLK | 22 | -22-9-0 | | | SOLDER | | |
| BLU/YEL | 22 | -22-6-4 | | | | | |
| WHT/GRN | 22 | -22-9-5 | | | | | |
| BLU/RED | 22 | -22-6-2 | | | | | |
| WHT/YEL | 22 | -22-9-4 | | | | | |
| BLU/TAN | 22 | -22-6-10 | | | | | |
| WHT/RED | 22 | -22-9-2 | | | | | |
| GRY/BLK | 22 | -22-8-0 | | | | | |
| RED/BLU | 16 | -16-2-6 | | | SOLDER | | |
| YELLOW | 20 | -20-4 | | | S-1370-1 | | |
| BLUE | 22S | S-1461-22-6 | | | | | |
| GRY/YEL | 22 | -22-8-4 | | | SOLDER | | |
| TAN/RED | 22 | -22-10-2 | | | | | |
| WHT/BLU | 22 | -22-9-6 | | | | | |
| BLACK | 22 | -22-0 | | | | | |
| WHITE | 16 | -16-9 | | | SOLDER | | |
| BLU/BLK | 22 | -22-6-0 | | SOLDER | S-1367-1-8 | | |
| WIRE CODE NO. | GA | MATERIAL | LG | TERMINALS | | | SERIALS |

1 WIRE TABLE

| ITEM NO | PART NO. | DESCRIPTION | INSTALLED ON |
|---|---|---|---|
| 14 | A-263 | CHOKE (CTAT) | |
| 13 | 33230-1200 | RCVR (WITH BFO) (ARC R-318G-12) | |
| 12 | S-1360-10 | CIRCUIT BREAKER | |
| 11 | R-12½-75-RS3A | RHEOSTAT (TRTA) | |
| 10 | 27881 | CONNECTOR KIT (ARC) | |
| 9 | 33827 | LOOP ANT. CABLE ASSY (ARC) | |
| 8 | 33979 | CONNECTOR (ARC) | |
| 7 | 33488-0001 | RECEIVER CABLE ASSY (ARC) | |
| 6 | 26795 | CONNECTOR KIT (ARC) | |
| 5 | 18637-0000 | SENSE ANT CABLE ASSY (ARC) | |
| 4 | 34660-0014 | DYNAVERTER (ARC DV-318A-1) | |
| 3 | 33890-1000 | LOOP ANTENNA (ARC L-318G) | |
| 2 | 33550 | GONIOMETER - INDICATOR (ARC IN-21C) | |
| 1 | 33230-1000 | RECEIVER (ARC R-318G-10) | |

EQUIPMENT TABLE

CESSNA AIRCRAFT CO., COMMERCIAL AIRCRAFT DIVISION, WICHITA, KANSAS

| | NAME | DATE |
|---|---|---|
| DRAWN | RIDDER | 4-3-65 |
| GROUP | J. Wise | 5-19-65 |
| CHECK | [illegible] | 5-17-65 |
| PROJ | ASHER | 5-18-65 |
| | [illegible] | 5-21-65 |

TITLE: WIRING DIAGRAM— CESSNA ADF 500 (GONIOMETER) (ARC TYPE 318G)

Cessna.

DWG NO: 1270675

SUPERSEDED BY:

SUPERSEDES: 1270675 PAGE 2.15.1

MODEL: P206 & U206

REV: A

PAGE: 2.29.1

FORM NO 80-161A

(SR4832)

| CHG LET | REVISION | BY DATE | CHK APPD |
|---|---|---|---|
| | | | |

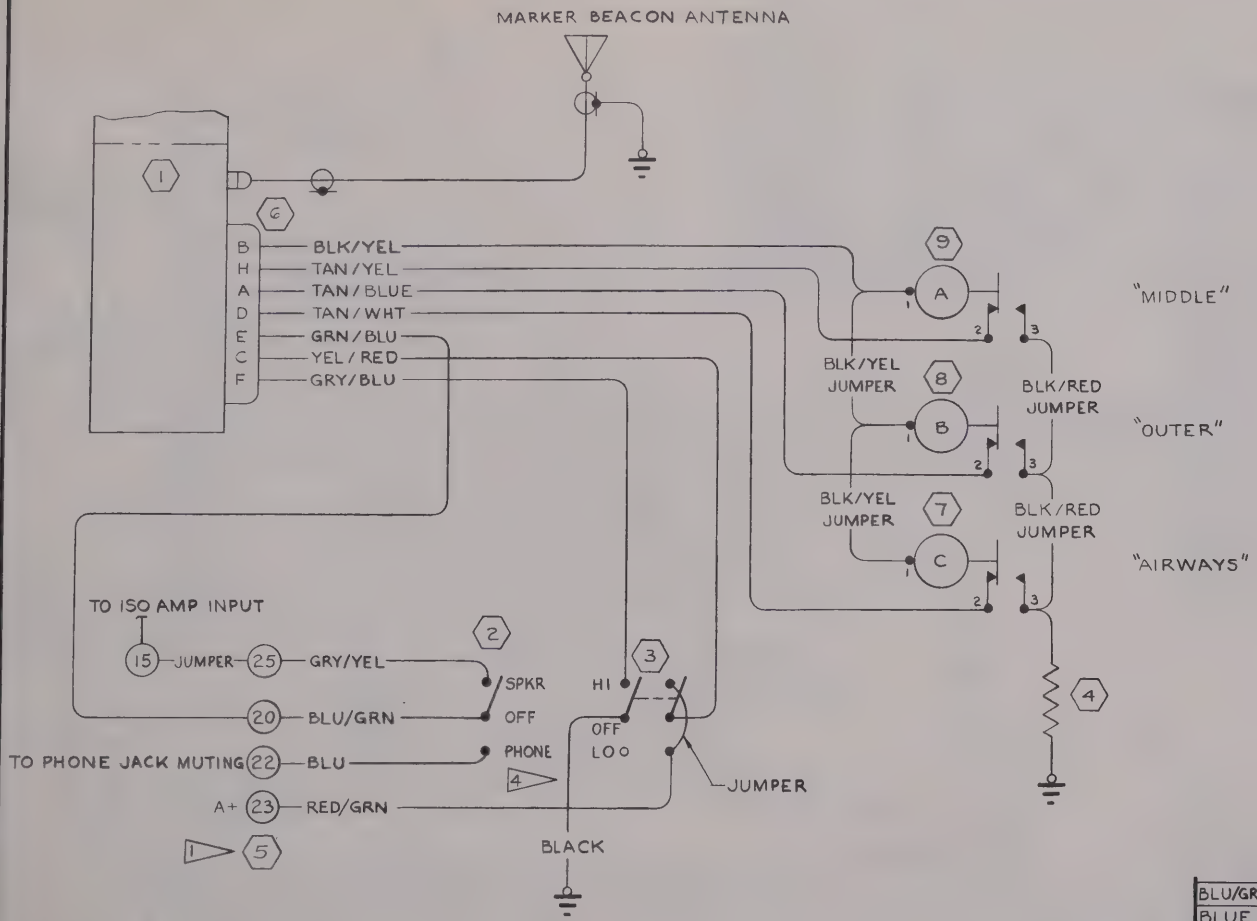


NOTES:

1. NUMBERS IN CIRCLES ARE NUMBERS ON 0770714-1 TERMINAL BLOCK ASSY.
2. WIRE MATERIAL PER S-1460.
3. TERMINAL BLOCK NUMBERS TO BE STAMPED ON WIRE PER CES-1015.
4. "PHONE" & "LO" FUNCTION TO BE ON KEYWAY SIDE OF SWITCH.

| | | | |
|---|---|---|---|
| 9 | MS25041-4-328 | LIGHT ASSY | |
| 8 | MS25041-10-328 | LIGHT ASSY | |
| 7 | MS25041-1-328 | LIGHT ASSY | |
| 6 | 28371-0007 | PLUG (ARC) | |
| 5 | 0770714-1 | TERM. BLOCK ASSY | |
| 4 | 40Ω, 3 WATT | RESISTOR (OM) | |

| WIRE CODE NO. | GA | MATERIAL | LG | TERMINALS | | SERIALS |
|---|---|---|---|---|---|---|
| BLU/GRN | 22 | -22-6-5 | | SOLDER | S-1367-1-8 | |
| BLUE | 22 | -22-6 | | SOLDER | S-1367-1-8 | |
| BLACK | 22 | -22-0 | | SOLDER | S-1367-1-8 | |
| RED/GRN | 20 | -20-2-5 | | | S-1367-1-8 | |
| GRY/YEL | 22 | -22-8-4 | | | S-1367-1-8 | |
| GRY/BLU | 22 | -22-8-6 | | | SOLDER | |
| YEL/RED | 20 | -20-4-2 | | | SOLDER | |
| GRN/BLU | 20 | -20-5-6 | | | S-1367-1-8 | |
| TAN/WHT | 22 | -22-10-9 | | | SOLDER | |
| TAN/BLU | 22 | -22-10-6 | | | SOLDER | |
| TAN/YEL | 22 | -22-10-4 | | | SOLDER | |
| BLK/YEL | 22 | -22-0-4 | | SOLDER | SOLDER | |

2

WIRE TABLE

CESSNA AIRCRAFT CO., COMMERCIAL AIRCRAFT DIVISION, WICHITA, KANSAS

| | NAME | DATE | TITLE |
|---|---|---|---|
| DRAWN | G. WOOD | 5-18-65 | WIRING DIAGRAM |

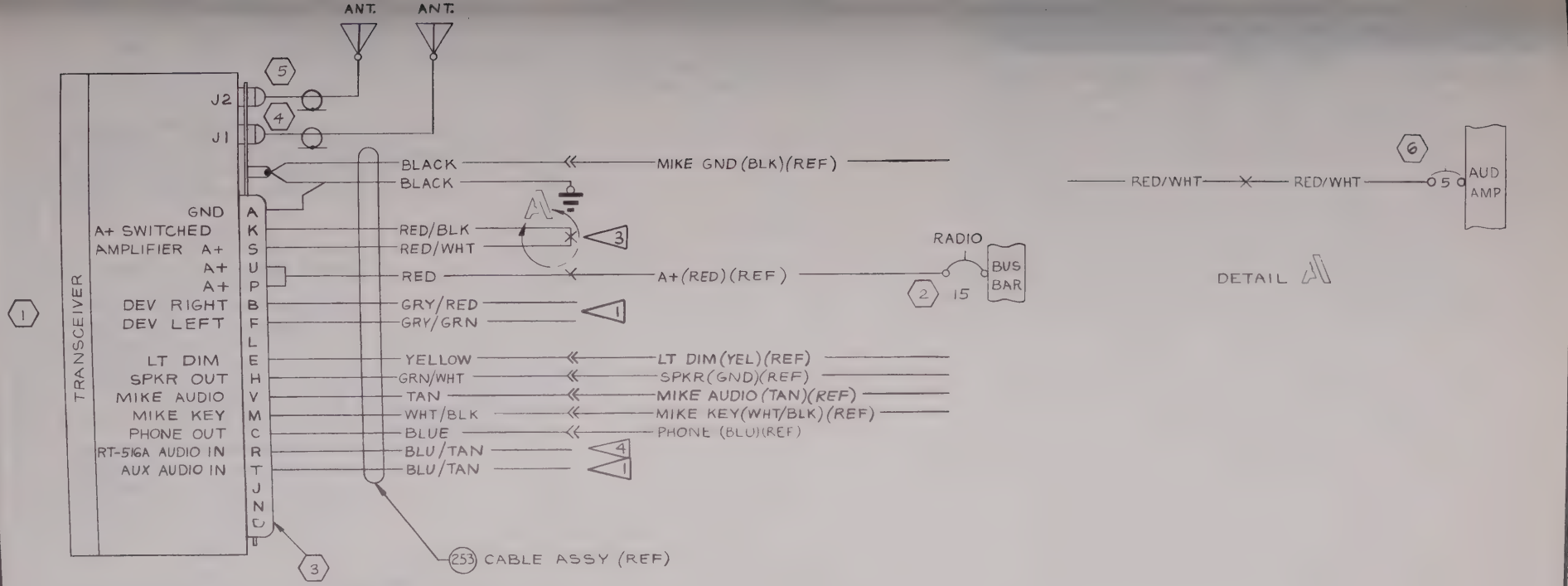


NOTES:

1. WIRES NOT USED SHALL BE CAPPED AND TIED INTO A BUNDLE
2. WIRE MATERIAL PER S-1460
3. WHEN THIS SET IS INSTALLED AS A SINGLE RADIO, CONNECT PINS "S" & "K" TOGETHER AS SHOWN. WHEN INSTALLED IN CONJUNCTION WITH ANOTHER RADIO SET SUCH AS AN ADF OR A NAV-OMNI, CONNECT PIN "S" AS SHOWN IN DETAIL "A"
4. WHEN THE NAV/COM IS INSTALLED WITH OTHER RADIO UNITS, THE BLUE WIRE CONNECTS TO THE WIPER OF A SPEAKER PHONE SWITCH & BLU/TAN WIRE (PIN R) CONNECTS TO THE SPKR TERMINAL OF A SPKR-PHONE SWITCH. ON SINGLE INSTALLATIONS, THE BLU/TAN WIRE (PIN R) CONNECTS TO BLU WIRE.

(SEE PAGE 2.31.1.1 FOR CONTINUATION OF NOTES)

| ITEM NO | PART NO. | DESCRIPTION | INSTALLED ON |
|---|---|---|---|
| 6 | S-1360-5 | CKT BKR | |
| 5 | 29753 | CONNECTOR (ARC) | |
| 4 | 29752 | CONNECTOR (ARC) | |
| 3 | 29747-0018 | CONNECTOR (ARC) | |
| 2 | S-1360-15 | CKT BKR | |
| 1 | 34710-1014 | XCVR (ARC TYPE | RT-516A) |

EQUIPMENT TABLE

| WIRE CODE NO. | GA | MATERIAL | LG | TERMINALS | | | SERIALS |
|---|---|---|---|---|---|---|---|
| BLU/TAN | 22 | -22-6-10 | | SOLDER | S-1557-1 | | |
| BLU/TAN | 22 | -22-6-10 | | | | | |
| BLUE | 22 | -22-6 | | | | | |
| WHT/BLK | 22 | -22-9-0 | | | S-341-2 | | |
| TAN | 22 | -22-10 | | | | | |
| GRN/WHT | 20 | -20-5-9 | | | | | |
| YELLOW | 18 | -18-4 | | | S-341-2 | | |
| GRY/GRN | 22 | -22-8-5 | | | S-1557-1 | | |
| GRY/RED | 22 | -22-8-2 | | | S-1557-1 | | |
| RED | 16 | -16-2 | | | S-1370-2 | | |
| RED/BLK | 18 | -18-2-0 | | | S-1370-1 | | |
| RED/WHT | 18 | -18-2-9 | | | | | |
| BLACK | 16 | -16-0 | | | S-1367-1-10 | | |
| BLACK | 22 | -22-0 | | SOLDER | S-341-2 | | |

2 WIRE TABLE

CESSNA AIRCRAFT CO., COMMERCIAL AIRCRAFT DIVISION, WICHITA, KANSAS

| | NAME | DATE |
|---|---|---|
| DRAWN | G WOOD | 6-4-65 |
| GROUP | H Wood | 6-7-65 |
| CHECK | R. [illegible] | 6-9-65 |
| PROJ | H. McCarter | 6-11-65 |

TITLE: WIRING DIAGRAM— CESSNA NAV-COMM 300 (ARC TYPE 516A)

Cessna

DWG NO: 1270675

SUPERSEDED BY:

SUPERSEDES: 270675 PAGE 2.7.1.0

MODEL: P206, U206

REV:

PAGE: 2.31.1.0

FORM NO 80-161A

(SR 4659)
(SR 4660)

| CHG LET | REVISION | BY DATE | CHK APPD |
|---|---|---|---|
| | | | |

NOTES (CONTINUED):

5. CIRCLED NUMBERS "◯" REFER TO TERMINALS ON TERMINAL BOARD ASSY.
6. CESSNA NAV/COM 300 AMPLIFIERS ARE OPERATED "ALWAYS HOT". SPEAKER OUTPUT FROM EACH SYSTEM CONNECTS EITHER TO A 5 OHM 10 WATT DUMMY LOAD OR THE SHIPS SPEAKER AS DETERMINED BY THE TRANSMITTER SELECTOR SWITCH.
7. WHEN AN OPTIONAL NAV-O-MATIC AUTOPILOT WITH OMNI COUPLER IS COMBINED WITH A CESSNA NAV/COM 300, THE GRY/RED WIRE CONNECTS TO DEV + CIRCUIT & THE GRY/GRN WIRE CONNECTS TO DEV- CIRCUIT.

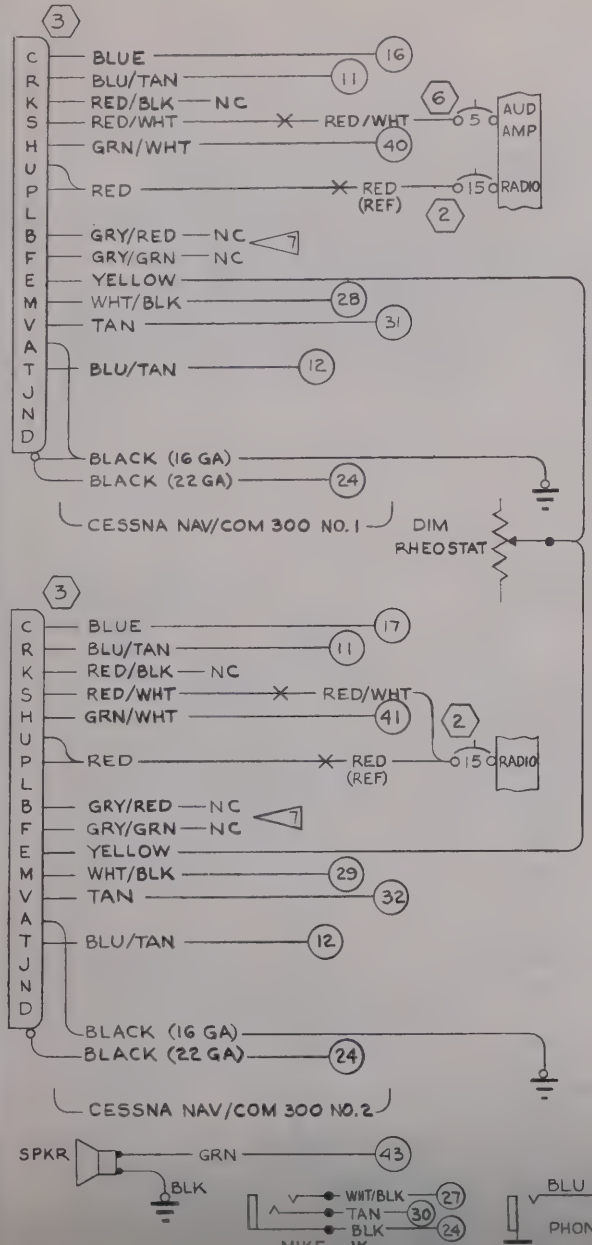


| WIRE CODE NO. | GA | MATERIAL | LG | TERMINALS | | SERIALS |
|---|---|---|---|---|---|---|
| | | | | | | |

WIRE TABLE

CESSNA AIRCRAFT CO., COMMERCIAL AIRCRAFT DIVISION, WICHITA, KANSAS

| | NAME | DATE | TITLE |
|---|---|---|---|
| DRAWN | | | WIRING DIAGRAM |
| CHECKED | | | |
| APPROVED | | | |

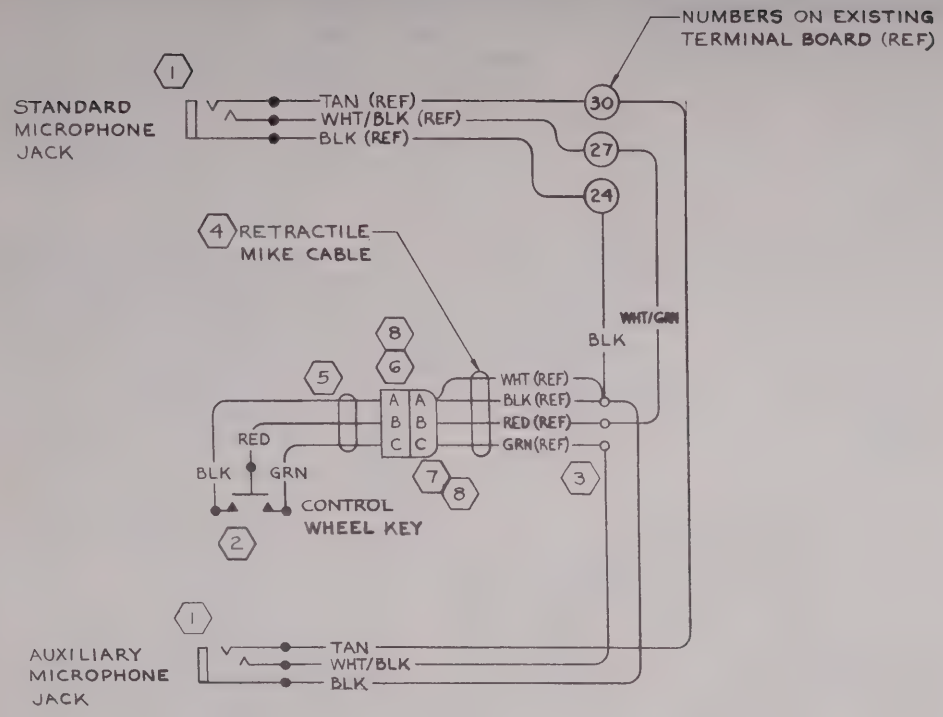


NOTES:

1. WIRE MATERIAL PER S-1460 EXCEPT AS NOTED.

| WIRE CODE NO. | GA | MATERIAL | LG | TERMINALS | | | SERIALS |
|---|---|---|---|---|---|---|---|
| WHT/BLK | 22 | -22-9-0 | | SOLDER | S-1367-1-6 | | |
| TAN | 22 | -22-10 | | SOLDER | S-1367-1-8 | | |
| WHT/GRN | 22 | -22-9-5 | | S-1367-1-6 | S-1367-1-8 | | |
| BLACK | 22 | -22-0 | | S-1367-1-8 | S-1367-1-6 | | |
| BLACK | 22 | -22-0 | | SOLDER | S-1367-1-6 | | |

1 WIRE TABLE

| ITEM NO | PART NO. | DESCRIPTION | INSTALLED ON |
|---|---|---|---|
| 8 | SM2H | HOOD (WIQ) | |
| 7 | SM3S | RECEPTACLE (WIQ) | |
| 6 | SM3P | PLUG (WIQ) | |
| 5 | 8443 | CABLE (BDN) | |
| 4 | 8409 | RETRACT. CABLE (BDN) | |
| 3 | AN3436-2-3 | TERMINAL BLOCK | |
| 2 | A8002 | SWITCH (HETH) | |
| 1 | S-1102-1 | JACK | |

EQUIPMENT TABLE

CESSNA AIRCRAFT CO COMMERCIAL AIRCRAFT DIVISION WICHITA KANSAS

| | NAME | DATE |
|---|---|---|
| DRAWN | G WOOD | 6-30-65 |
| GROUP | H. Wise | 7-1-65 |
| CHECK | McGUIGAN | 7-2-65 |
| PROJ | J. Moody | 7-9-65 |

TITLE: WIRING DIAGRAM— AUXILIARY MICROPHONE JACK & CONTROL WHEEL KEY

Cessna.

DWG NO: 1270675

SUPERSEDED BY: | SUPERSEDES: | MODEL: P206, U206 | REV: | PAGE: 2.32

FORM NO 80-161A

(SR4659)
(SR4660)

| CHG LET | REVISION | BY DATE | CHK APPD |
|---|---|---|---|
| | | | |

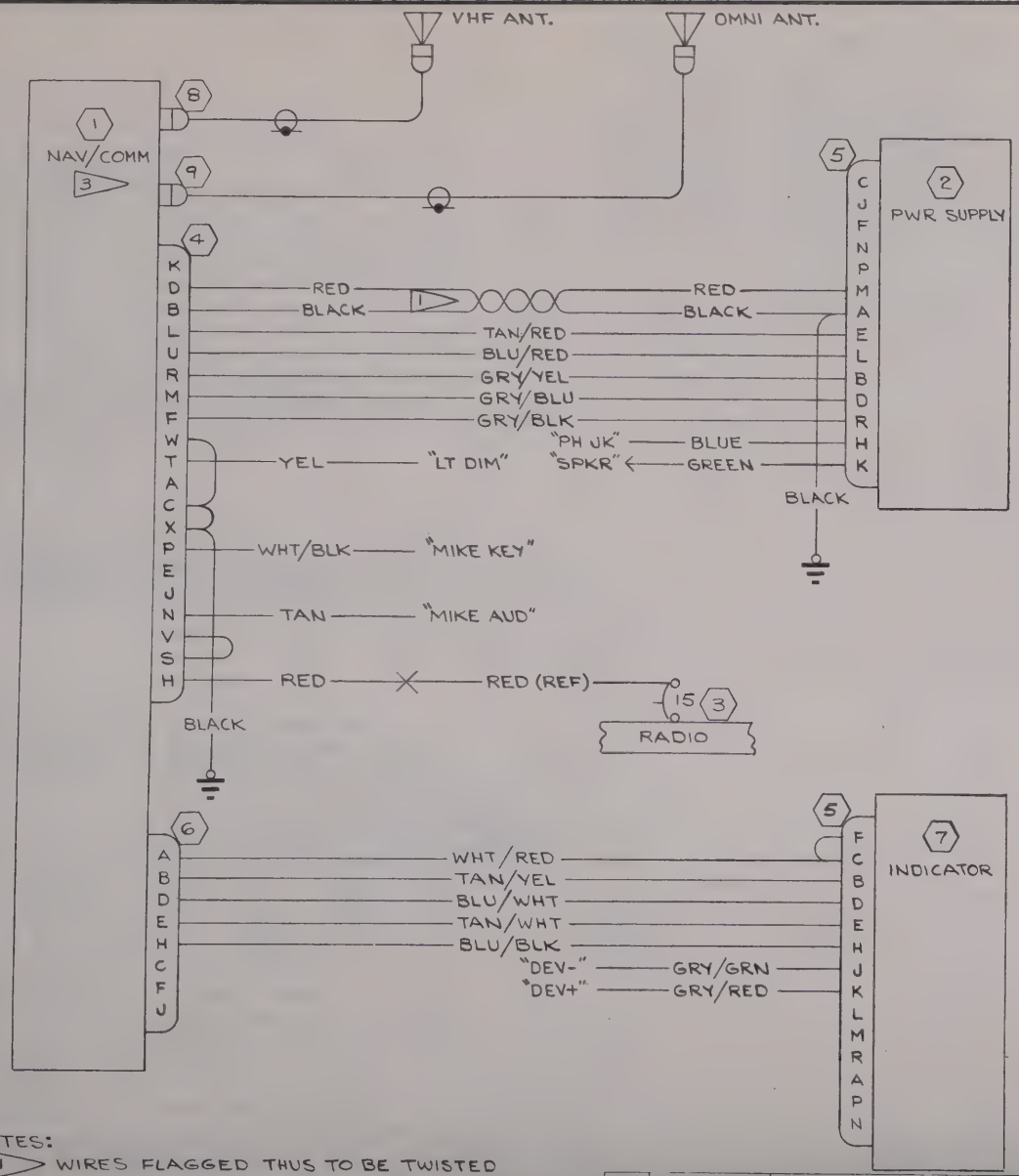


NOTES:

1. WIRES FLAGGED THUS TO BE TWISTED TOGETHER TO FORM A TWISTED PAIR.
2. WIRE MATERIAL PER S-1460.
3. THE KX-160E PANEL UNIT INCLUDES A 14 PIN CONNECTOR FOR DME CHANNELING THAT IS NOT SHOWN ON THIS DIAGRAM.

| | | |
|---|---|---|
| 9 | 030-C028-00 | CONNECTOR (KG) |
| 8 | 030-0005-00 | CONNECTOR (KG) |
| 7 | KI-201 | INDICATOR (KG) |
| 6 | 030-2044-00 | CONNECTOR (KG) |
| 5 | 030-2000-00 | CONNECTOR (KG) |
| 4 | 030-2002-00 | CONNECTOR (KG) |

| WIRE CODE NO. | GA | MATERIAL | LG | TERMINALS | | SERIALS |
|---|---|---|---|---|---|---|
| GRY/RED | 22 | -22-8-2 | | SOLDER | S-1557-1 | |
| GRY/GRN | 22 | -22-8-5 | | | S-1557-1 | |
| BLU/BLK | 22 | -22-6-0 | | | SOLDER | |
| TAN/WHT | 22 | -22-10-9 | | | | |
| BLU/WHT | 22 | -22-6-9 | | | | |
| TAN/YEL | 22 | -22-10-4 | | | | |
| WHT/RED | 22 | -22-9-2 | | | SOLDER | |
| BLACK | 22 | -22-0 | | | S-13671-8 | |
| RED | 16 | -16-2 | | | S-1370-2 | |
| TAN | 22 | -22-10 | | | | |
| WHT/BLK | 22 | -22-9-0 | | | | |
| YELLOW | 18 | -18-4 | | | | |
| BLACK | 22 | -22-0 | | | S-13671-8 | |
| GREEN | 20 | -20-5 | | | S-341-2 | |
| BLUE | 22 | -22-6 | | | | |
| GRY/BLK | 22 | -22-8-0 | | | SOLDER | |
| GRY/BLU | 22 | -22-8-6 | | | | |
| GRY/YEL | 22 | -22-8-4 | | | | |
| BLU/RED | 22 | -22-6-2 | | | | |
| TAN/RED | 22 | -22-10-2 | | | | |
| BLACK | 16 | -16-0 | | | | |
| RED | 16 | -16-2 | | SOLDER | SOLDER | |

2 WIRE TABLE

CESSNA AIRCRAFT CO., COMMERCIAL AIRCRAFT DIVISION, WICHITA, KANSAS

| | NAME | DATE |
|---|---|---|
| DRAWN | RIDDER | 6-21-65 |

TITLE: WIRING DIAGRAM—

C

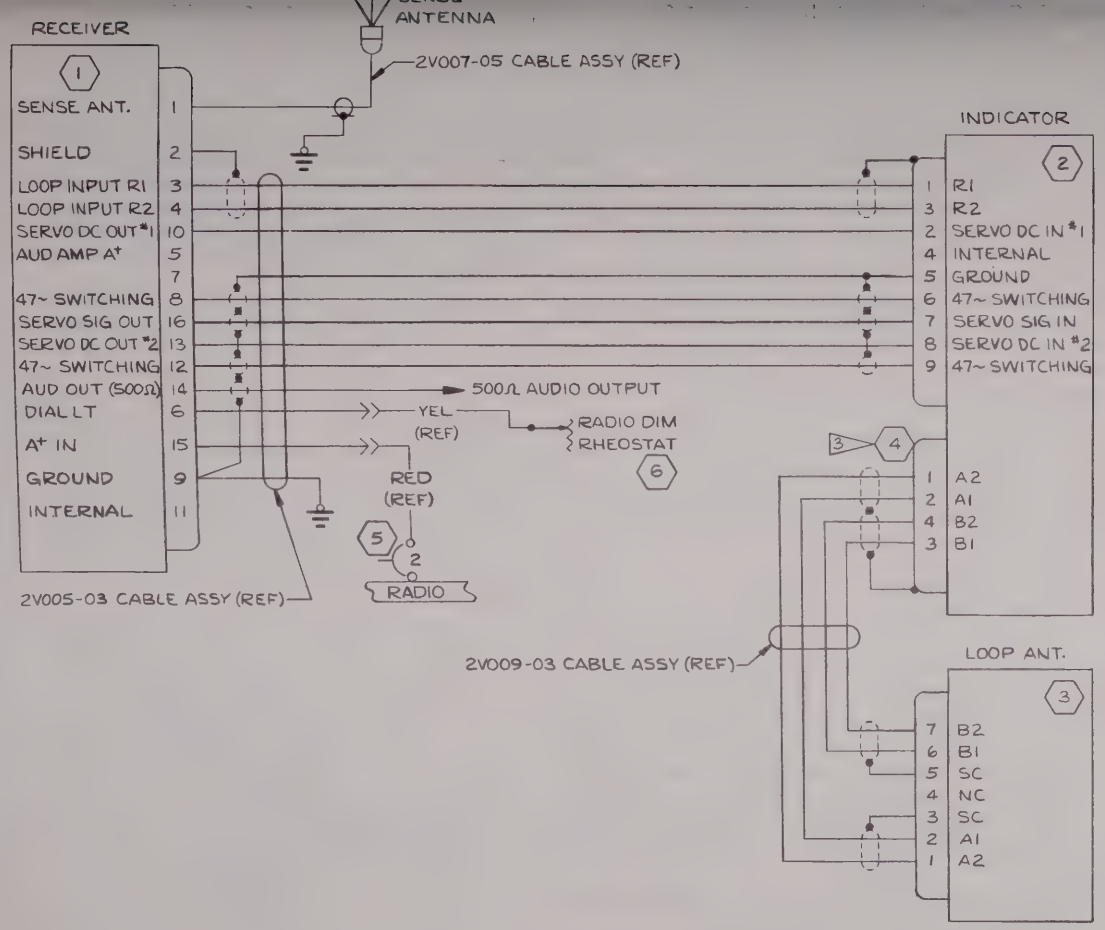


NOTES:

1. CONNECTIONS SHOWN ARE FOR TOP MOUNTED SENSE & BOTTOM MOUNTED LOOP ANTENNA.
2. ALL WIRES ARE VENDOR FURNISHED WITH INSTL KIT

3. (4) IS SUPPLIED LOOSE BY VENDOR & IS TO BE ATTACHED TO LOOP ANT. CABLE AS SHOWN. FLAGS ON WIRES INDICATE PIN NOS. ON LOOP ANT. END OF CABLE.

| ITEM NO | PART NO. | DESCRIPTION | INSTALLED ON |
|---|---|---|---|
| 6 | R-12½-75-RS34 | RHEOSTAT (TRTA) | |
| 5 | S-1360-2 | CIRCUIT BREAKER | |
| 4 | WK-4-21C-5/16 | PLUG (CED) | |
| 3 | 2321E | LOOP ANT. (BX) | |
| 2 | 551A | INDICATOR (BX) | |
| 1 | 201D | RCVR (BX) | |

EQUIPMENT TABLE

| WIRE CODE NO | GA | MATERIAL | LG | TERMINALS | | SERIALS |
|---|---|---|---|---|---|---|

WIRE TABLE

CESSNA AIRCRAFT CO., COMMERCIAL AIRCRAFT DIVISION, WICHITA, KANSAS

| | NAME | DATE |
|---|---|---|
| DRAWN | HOLFORD | 7-20-65 |
| GROUP | H. Wise | 8-23-65 |
| CHECK | C. Stuck | 8-24-65 |
| PROJ | H. McCarter | 8-29-65 |

TITLE: WIRING DIAGRAM— BENDIX ADF-T-12C

Cessna®

DWG NO: 1270675

SUPERSEDED BY: | SUPERSEDES | MODEL: P206 & U206 | REV: | PAGE: 2.35

FORM NO 80-161A

(SR4938)

| CHG LET | REVISION | BY DATE | CHK APPD |
|---|---|---|---|
| | | | |

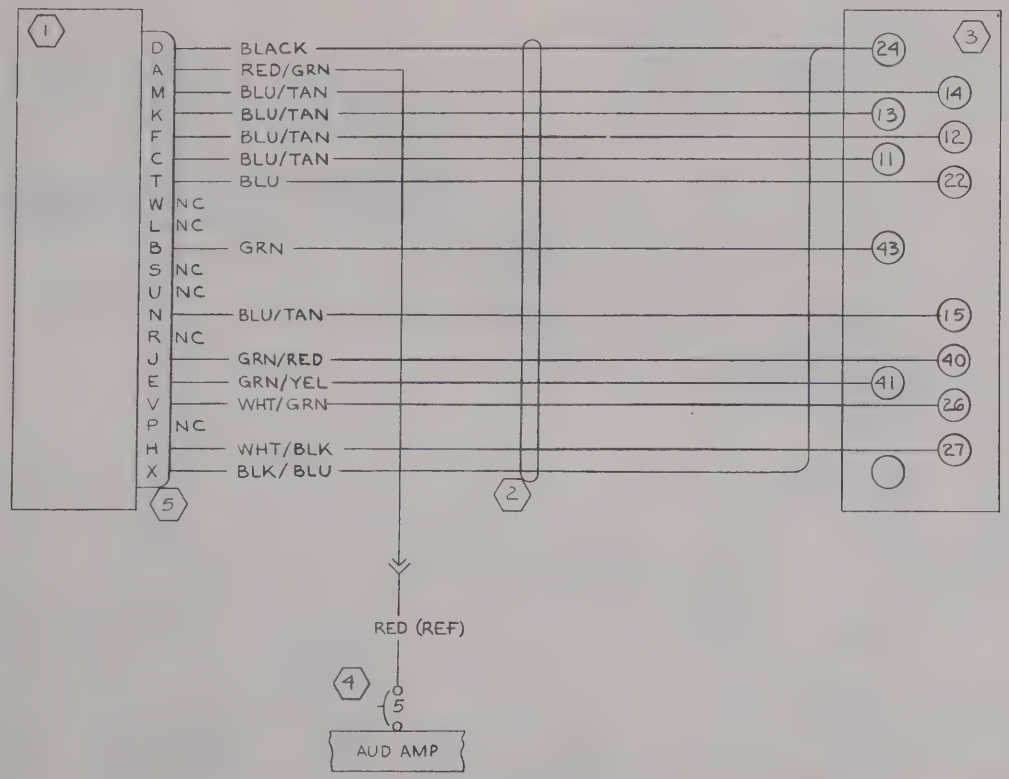


1> THESE CIRCUITS PROVIDE A 4 Ω, 5 WATT SPEAKER LOAD WHEN REQD BY THE RADIO INSTALLATION.

2> CONNECTOR IS FURNISHED WITH KA-25C.

3. TERMINAL BLOCK NUMBERS TO BE STAMPED ON WIRES PER CES 1015.

| | | | | | | | | | |
|---|---|---|---|---|---|---|---|---|---|
| BLU/TAN | 22 | S-1460-22-6-10 | | S-1367-1-8 | SOLDER | | | | |
| WHT/GRN | 22 | S-1460-22-9-5 | | S-1367-1-8 | SOLDER | | | | |
| BLACK | 18 | -18-0 | | S-1367-1-8 | | | | | |
| RED/GRN | 20 | -20-2-5 | | S-341-2 | | | | | |
| BLU/TAN | 22 | -22-6-10 | | S-1367-1-8 | | | | | |
| BLU/TAN | 22 | -22-6-10 | | | | | | | |
| BLU/TAN | 22 | -22-6-10 | | | | | | | |
| BLU/TAN | 22 | -22-6-10 | | | | | | | |
| BLU | 22 | -22-6 | | | | | | | |
| GRN | 20 | -20-5 | | | | | | | |
| GRN/RED | 20 | -20-5-2 | | | | | | | |
| GRN/YEL | 20 | -20-5-4 | | | | | | | |
| WHT/BLK | 22 | -22-9-0 | | | | | | | |
| BLK/BLU | 22 | S-1460-22-0-6 | | S-1367-1-8 | SOLDER | | | | |
| WIRE CODE NO. | GA | MATERIAL | LG | TERMINALS | | | | SERIALS | |

WIRE TABLE

| | | | |
|---|---|---|---|
| 2> | 5 | 030-2002-00 | PLUG (KG) |
| | 4 | S-1360-5 | CIRCUIT BREAKER |

CESSNA AIRCRAFT CO., COMMERCIAL AIRCRAFT DIVISION, WICHITA, KANSAS

| | NAME | DATE | TITLE |
|---|---|---|---|
| DRAWN | G WOOD | 11-24-65 | WIRING DIAGRAM— |

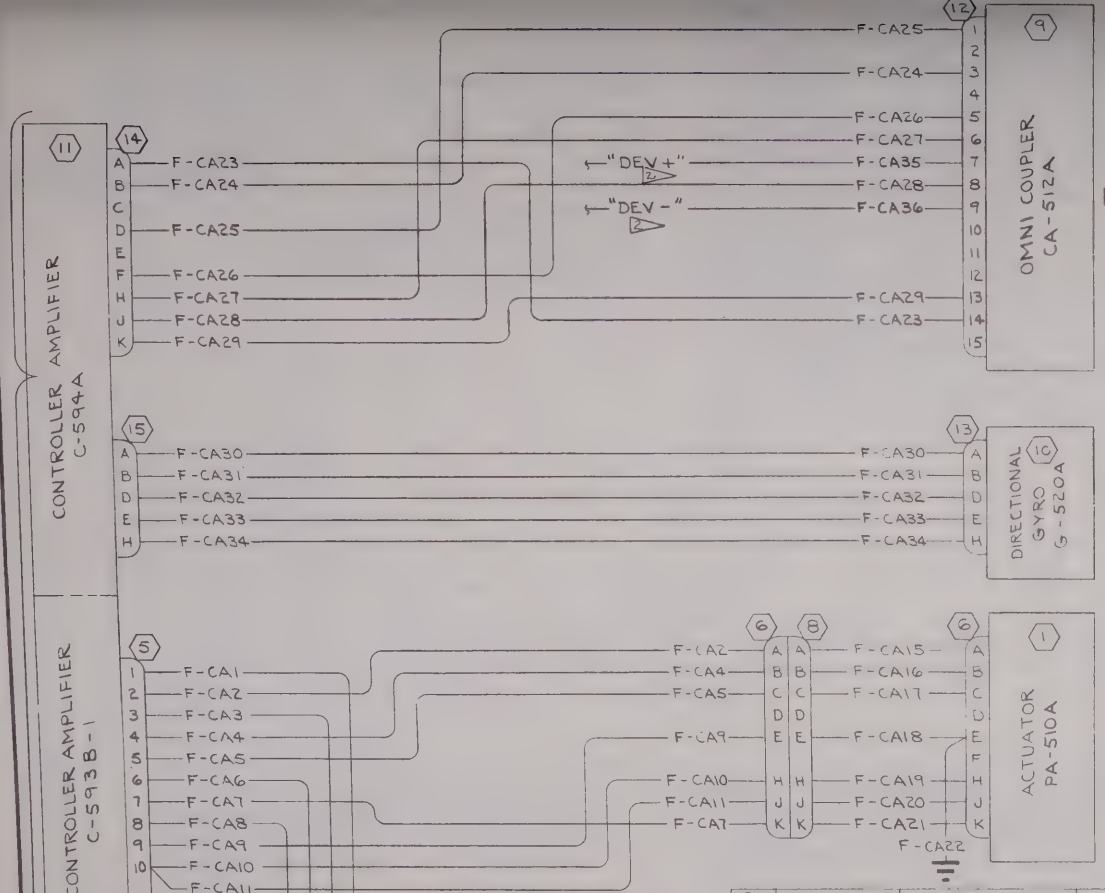


NOTES:

1. "F" PREFIX USED ON THIS DRAWING INSTEAD OF "H" BECAUSE CABLE ASSYS ARE SAME AS THOSE USED IN MODEL 210. THIS DIAGRAM IS SCHEMATICALLY IDENTICAL TO 1270405 PAGE 17.7 WIRING DIAGRAM AND IS FOR REF ONLY.
2. "DEV+" AND "DEV-" TO BE STAMPED ON THESE WIRES AS SHOWN. NUMERICAL CODE IS OPTIONAL.

| LET | REVISION | DATE | APPD |
|---|---|---|---|
| A | INI/T: G-515A RATE GYRO WAS G-520A; G-520A DIRECTIONAL GYRO WAS G-516A & REMOVE JUMPERS FROM 29410 PLUG (12-5) | WJR 8-27-62 | RRS |

INACTIVE:
SERIAL 205-0483 & ON
206-0010 & ON
H & W 5-6-63
RRS
JM NIHC

| WIRE CODE NO. | GA | MATERIAL | LG | TERMINALS | | N/A | SERIALS |
|---|---|---|---|---|---|---|---|
| F-CA36 | 22 | | | SOLDER | SOLDER | 1270449 | |
| F-CA35 | 22 | | | | | | |
| F-CA34 | 22 | | | | | | |
| F-CA33 | 22 | | | | | | |
| F-CA32 | 22 | | | | | | |
| F-CA31 | 22 | | | | | | |
| F-CA30 | 22 | | | | | | |
| F-CA29 | 20 | | | | | | |
| F-CA28 | 22 | | | | | | |
| F-CA27 | 22 | | | | | | |
| F-CA26 | 22 | | | | | | |
| F-CA25 | 22 | | | | | | |
| F-CA24 | 20 | | | | | | |
| F-CA23 | 20 | | | | | | |
| F-CA22 | 22 | | | | | | |
| F-CA21 | 22 | | | | | | |
| F-CA20 | 20 | | | | | | |
| F-CA19 | 20 | | | | | | |
| F-CA18 | 22 | | | | | | |
| F-CA17 | 22 | | | | | | |
| F-CA16 | 22 | | | | | | |
| F-CA15 | 22 | | | SOLDER | | | |
| F-CA14 | 18 | | | S-1367-1-8 | | | |
| F-CA13 | 18 | | | S-1367-1-8 | | | |
| F-CA12 | 16 | | | SOLDER | | | |
| F-CA11 | 20 | | | | | | |
| F-CA10 | 20 | | | | | | |
| F-CA9 | 22 | | | | | | |
| F-CA8 | 22 | | | | | | |
| F-CA7 | 22 | | | | | | |
| F-CA6 | 22 | | | | | | |
| F-CA5 | 22 | | | | | | |
| F-CA4 | 22 | | | | | | |
| F-CA3 | 22 | | | | | | |
| F-CA2 | 22 | | | | | | |
| F-CA1 | 22 | | | SOLDER | SOLDER | 1270449 | |

WIRE TABLE

| ITEM NO | PART NO. | DESCRIPTION | INSTALLED ON |
|---|---|---|---|
| 21 | | | |
| 20 | | | |
| 19 | | | |
| 18 | | | |
| 17 | 1270429-1 | BUS BAR | |
| 16 | S-1232-10 | CIRCUIT BREAKER | |
| 15 | 28371-0005 | PLUG (ARC) | |
| 14 | 28371-0009 | PLUG (ARC) | |
| 13 | 28326-0005 | PLUG (ARC) | |
| 12 | 29410 | PLUG (ARC) | |
| 11 | C-594A | CONTROLLER AMP (ARC) | |
| 10 | G-520A | DIRECTIONAL GYRO (ARC) | |
| 9 | CA-512A | OMNI COUPLER (ARC) | |
| 8 | 28505-0009 | PLUG (ARC) | |
| 7 | 50328-0002 | PLUG (ARC) | |
| 6 | 28326-0009 | PLUG (ARC) | |
| 5 | 28336 | PLUG (ARC) | |
| 4 | 28460 | PLUG (ARC) | |
| 3 | C-593B-1 | CONTROLLER AMP (ARC) | |
| 2 | G-515A | RATE GYRO (ARC) | |
| 1 | PA-510A | ACTUATOR (ARC) | |

EQUIPMENT TABLE

CESSNA AIRCRAFT CO. COMMERCIAL AIRCRAFT DIVISION WICHITA KANSAS

| | NAME | DATE |
|---|---|---|
| DRAWN | RIDDER | 8-6-62 |
| GROUP | C.V. Martin | 8-10-62 |
| CHECK | R. Stuck | 8-10-62 |
| PROJ | N. McCarter | 8-10-62 |

TITLE: WIRING DIAGRAM — NAV-O-MATIC 200 & 300 SYSTEMS (OPT)

Cessna.

DWG NO. 1270625

| SUPERSEDED BY | SUPERSEDES | MODEL: | REV: | PAGE: |
|---|---|---|---|---|
| 1270625, PAGE 17.13.1 | | 205 | A | 17.13 |

FORM NO. 80-161

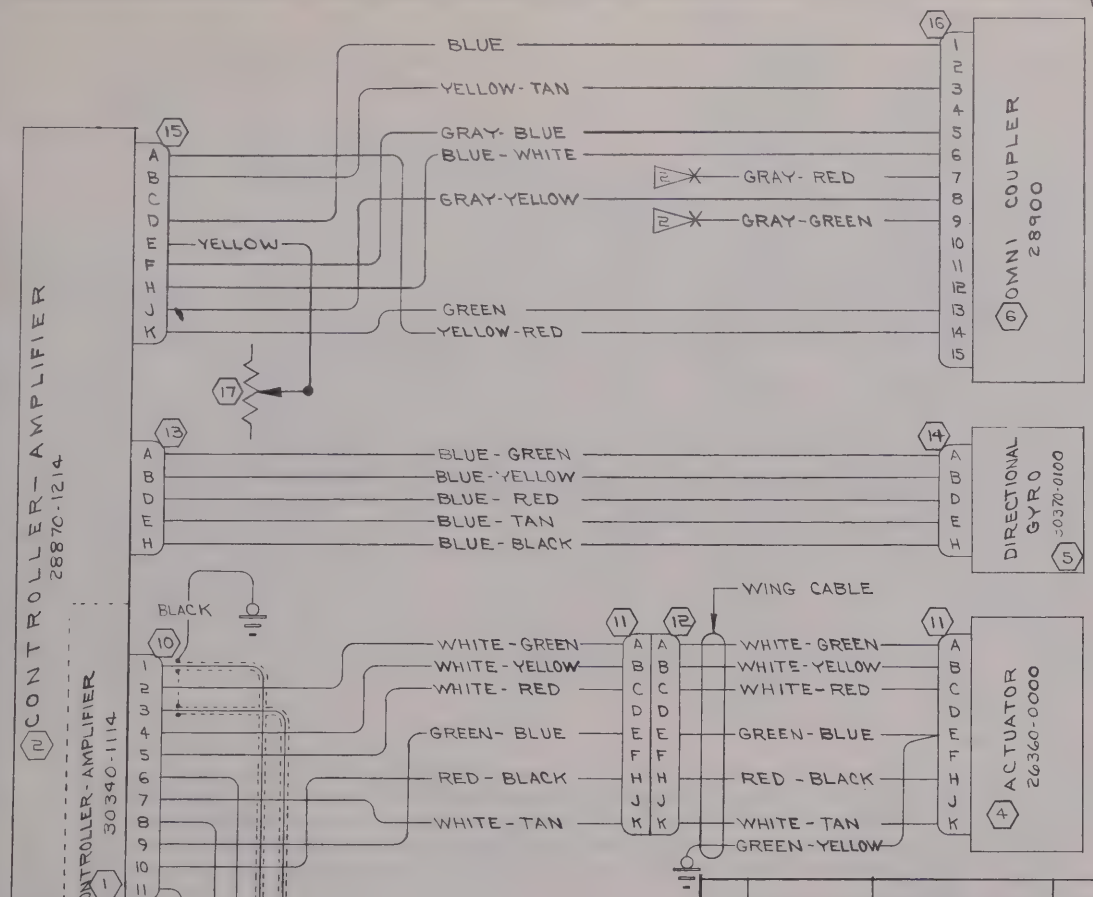


NOTES: (SR4240)

1. WHERE WIRE CODE LISTS 2 COLORS, 1ST COLOR IS BASE COLOR & 2ND COLOR IS THE STRIPE.
2. GRAY-RED WIRE IS "DEV+" CIRCUIT & GRAY-GREEN WIRE IS "DEV-" CIRCUIT FOR CONNECTION TO A VOR INDICATOR.
3. NAV-O-MATIC 300 SYSTEM INCLUDES ALL ITEMS EXCEPT (1), 200 SYSTEM INCLUDES (1)(3)(4)(7) & ASSOCIATED PLUGS & WIRES
4. THIS DRAWING IS SCHEMATICALLY IDENTICAL TO 1270405, PAGE 17.7.1 AND IS FOR (REF) ONLY. CABLE ASSYS TO BE FABRICATED PER 1270405, PAGE 17.7.1

| CHG LET | REVISION | BY / DATE | CHK / APPD |
|---|---|---|---|
| A | ADDED YELLOW WIRE & R-12½-8-RS34; 30340-1114 WAS C-5938-1; 28870-1214 WAS C-594A; 50320 WAS G-515A; 26360-0000 WAS PA-510A; 30370-0100 WAS G-520A; 28900 WAS GA-512A | WJR 10-30-64 | RRS and RLW |

| WIRE CODE NO. | GA | MATERIAL | LG | TERMINALS | | NEXT ASSEMBLY | SERIALS |
|---|---|---|---|---|---|---|---|
| YELLOW | 20 | S-1460-20-4 | | SOLDER | SOLDER | 1270449 | P206-0028 & U206-0318 & ON |
| BLACK | 16 | S-1460-16-0 | | SOLDER | S-1367-2-8 | 1270449 | |
| YELLOW/RED | 20 | S-1460-20-4-2 | | | SOLDER | | |
| GREEN | 20 | S-1460-20-5 | | | SOLDER | | |
| GRAY/GREEN | 22 | S-1460-22-8-5 | | | S-1370-0 | | |
| GRAY/RED | 22 | S-1460-22-8-2 | | | S-1370-0 | | |
| GRAY/YELLOW | 22 | S-1460-22-8-4 | | | SOLDER | | |
| BLUE/WHITE | 22 | S-1460-22-6-9 | | | | | |
| GRAY/BLUE | 22 | S-1460-22-8-6 | | | | | |
| YELLOW/TAN | 20 | S-1460-20-4-10 | | | | | |
| BLUE | 22 | S-1460-22-6 | | | | | |
| BLUE/BLACK | 22 | S-1460-22-6-0 | | | | | |
| BLUE/TAN | 22 | S-1460-22-6-10 | | | | | |
| BLUE/RED | 22 | S-1460-22-6-2 | | | | | |
| BLUE/YELLOW | 22 | S-1460-22-6-4 | | | | | |
| BLUE/GREEN | 22 | S-1460-22-6-5 | | | | | |
| WHITE/GREEN | 22 | S-1460-22-9-5 | | | | | |
| WHITE/YELLOW | 22 | S-1460-22-9-4 | | | | | |
| WHITE/RED | 22 | S-1460-22-9-2 | | | | | |
| GREEN/BLUE | 20 | S-1460-20-5-6 | | | | | |
| RED/BLACK | 18 | S-1460-18-2-0 | | | | | |
| WHITE/TAN | 22 | S-1460-22-9-10 | | | SOLDER | | |
| GREEN/YELLOW | 20 | S-1460-20-5-4 | | | S-1367-1-8 | | |
| BLACK/WHITE | 18 | S-1460-18-0-9 | | | S-1367-1-8 | | |
| RED/WHITE | 18 | S-1460-18-2-9 | | | S-1367-1-8 | | |
| RED | 16 | S-1460-16-2 | | | S-1367-2-8 | | |
| RED/BLACK | 18 | S-1460-18-2-0 | | | SOLDER | | |
| GREEN/BLUE | 20 | S-1460-20-5-6 | | | | | |
| TAN/WHITE | 22 | S-1460-22-10-9 | | | | | |
| WHITE/TAN | 22 | S-1460-22-9-10 | | | | | |
| TAN/BLUE | 22 | S-1460-22-10-6 | | | | | |
| WHITE/RED | 22 | S-1460-22-9-2 | | | | | |
| WHITE/YELLOW | 22 | S-1460-22-9-4 | | | | | |
| BLUE/RED | 22.5 | S-1461-22-6-2 | | | | | |
| WHITE/GREEN | 22 | S-1460-22-9-5 | | | | | |
| BLUE/YELLOW | 22.5 | S-1461-22-6-4 | | SOLDER | SOLDER | 1270449 | |

WIRE TABLE

| ITEM NO | PART NO. | DESCRIPTION | INSTALLED ON |
|---|---|---|---|
| 17 | R-12½-8-RS34 | RHEOSTAT (TRTA) | |
| 16 | 29410 | PLUG (ARC) | |
| 15 | 28371-0009 | PLUG (ARC) | |
| 14 | 28326-0005 | PLUG (ARC) | |
| 13 | 28371-0005 | PLUG (ARC) | |
| 12 | 28505-0009 | PLUG (ARC) | |
| 11 | 28326-0009 | PLUG (ARC) | |
| 10 | 28336 | PLUG (ARC) | |
| 9 | 50328-0002 | PLUG (ARC) | |
| 8 | 28460 | PLUG (ARC) | |
| 7 | S-1360-10 | CIRCUIT BREAKER | |
| 6 | 28900 | OMNI COUPLER (ARC TYPE CA-512A) | |
| 5 | 30370-0100 | DIRECTION GYRO (ARC TYPE G-520A) | |
| 4 | 26360-0000 | ACTUATOR (ARC TYPE PA-510A) | |
| 3 | 50320 | RATE GYRO (ARC TYPE G-515A) | |
| 2 | 28870-1214 | CONTROLLER-AMP (ARC TYPE C-594A-12) | |
| 1 | 30340-1114 | CONTROLLER-AMP (ARC TYPE C-593B-11) | |

EQUIPMENT TABLE

CESSNA AIRCRAFT CO., COMMERCIAL AIRCRAFT DIVISION, WICHITA, KANSAS

| | NAME | DATE |
|---|---|---|
| DRAWN | H. WISE | 5-3-63 |
| GROUP | Jack Manly | 5-16-63 |
| CHECK | R. Stuck | 5-16-63 |
| PROJ | H. McCarter | 5-23-63 |

TITLE: WIRING DIAGRAM — NAV-O-MATIC 200 & 300 SYSTEMS (OPT)

Cessna.

DWG NO 1270625

SUPERSEDED BY

SUPERSEDES

MODEL

REV A

PAGE 17.7.1

NOTES:

1. GRY/RED WIRE IS "DEV +" CIRCUIT & GRY/GRN WIRE IS "DEV -" CIRCUIT FOR CONNECTION TO A VOR INDICATOR.
2. CONNECTORS REQUIRED FOR FABRICATING A COMPLETE SET OF INTERCONNECTING CABLES ARE INCLUDED IN ARC CONNECTOR KIT NO. 31682.
3. WING CABLE ASSY AND DIRECTIONAL GYRO CABLE ARE FOR REFERENCE ONLY THESE CABLES ARE IDENTICAL IN LENGTH AND COLOR CODING TO CABLES USED ON NAV-O-MATIC 300 INSTL. 1270449-2 CABLE ASSY REQUIRED ON MODEL 205 & 1270449-6 REQUIRED ON MODEL 206.

(SR4338)

| LET | | DATE | APPD |
|---|---|---|---|
| | | | |

| WIRE CODE NO | GA | MATERIAL | LG | TERMINALS | | N/A | SERIALS |
|---|---|---|---|---|---|---|---|
| GRN/YEL | 20 | S-1460-20-5-4 | | SOLDER | S-1367-1-8 | 0770704 | |
| WHT/BLK | 22 | S-1460-22-9-0 | | | SOLDER | | |
| RED/BLK | 18 | S-1460-18-2-0 | | | | | |
| WHT/RED | 22 | S-1460-22-9-2 | | | | | |
| BLK/BLU | 22 | S-1460-22-0-6 | | | | | |
| WHT/YEL | 22 | S-1460-22-9-4 | | | | | |
| WHT/GRN | 22 | S-1960-22-9-5 | | | | | |
| WHT/BLU | 22 | S-1460-22-9-6 | | | | | |
| WHT/TAN | 22 | S-1460-22-9-10 | | | | | |
| RED/BLK | 18 | S-1960-18-2-0 | | | | | |
| WHT/RED | 22 | S-1960-22-9-2 | | | | | |
| WHT/BLU | 22 | S-1460-22-9-6 | | | | | |
| WHT/TAN | 22 | S-1460-22-9-10 | | | | | |
| WHT/YEL | 22 | S-1460-22-9-4 | | | | | |
| WHT/GRN | 22 | S-1960-22-9-5 | | SOLDER | SOLDER | 0770704 | |
| TAN/WHT | 22 | S-1460-22-10-9 | | SOLDER | SOLDER | 0770704 | |
| TAN/BLU | 22 | S-1960-22-10-6 | | | | | |
| TAN/YEL | 22 | S-1960-22-10-4 | | | | | |
| TAN/RED | 22 | S-1460-22-10-2 | | | SOLDER | | |
| YELLOW | 18 | S-1960-18-4 | | | S-1370-1 | | |
| RED | 18 | S-1960-18-2 | | | S-1370-2 | | |
| WHT/RED | 22 | S-1460-22-9-2 | | | SOLDER | | |
| BLU/TAN | 22 | S-1460-22-6-10 | | | | | |
| RED/WHT | 18 | S-1460-18-2-9 | | | | | |
| WHT/BLK | 22 | S-1460-22-9-0 | | | SOLDER | | |
| GRY/GRN | 22 | S-1460-22-8-5 | | | S-1370-1 | | |
| GRY/RED | 22 | S-1460-22-8-2 | | | S-1370-1 | | |
| BLU/WHT | 22 | S-1460-22-6-9 | | | SOLDER | | |
| RED/BLK | 18 | S-1460-18-2-0 | | | | | |
| TAN/WHT | 22 | S-1460-22-10-9 | | | | | |
| BLU/GRN | 22 | S-1460-22-6-5 | | | | | |
| TAN/BLU | 22 | S-1460-22-10-6 | | | | | |
| TAN/RED | 22 | S-1460-22-10-2 | | | | | |
| BLU/YEL | 22 | S-1460-22-6-4 | | | | | |
| TAN/YEL | 22 | S-1460-22-10-4 | | | | | |
| BLU/RED | 22 | S-1460-22-6-2 | | | | | |
| BLU/BLK | 22 | S-1460-22-6-0 | | | | | |
| TAN | 22 | S-1460-22-10 | | | | | |
| BLUE | 22 | S-1460-22-6 | | SOLDER | SOLDER | 0770704 | |

WIRE TABLE

| ITEM NO | PART NO. | DESCRIPTION | INSTALLED ON |
|---|---|---|---|
| 22 | 1270449-2 | CABLE ASSY | <3 |
| 21 | 1270449-4 | CABLE ASSY | |
| 20 | 1270449-6 | CABLE ASSY | <3 |
| 19 | 1270461-1 | BUS BAR | |
| 18 | RED | WIRE | |
| 17 | S-1360-10 | CIRCUIT BREAKER | |
| 16 | R-12½-75-RS34 | RHEOSTAT (TRTA) | |
| 15 | YELLOW | WIRE | |
| 14 | 28371-0009 | CONNECTOR (ARC | <2 |
| 13 | 28505-0009 | CONNECTOR (ARC) | |
| 12 | 28326-0009 | CONNECTOR (ARC) | |
| 11 | 28326-0007 | CONNECTOR (ARC) | |
| 10 | 28326-0005 | CONNECTOR (ARC) | |
| 9 | 28371-0005 | CONNECTOR (ARC) | |
| 8 | 28371-0007 | CONNECTOR (ARC) | |
| 7 | 31683-0020 | CONNECTOR ASSY (ARC) | <2 |
| 6 | 30370-0100 | DIRECTIONAL GYRO | (ARCG-520A) |
| 5 | 26360-0000 | ROLL ACTUATOR | (ARCPA-510A) |
| 4 | 26360-0000 | PITCH ACTUATOR | (ARCPA-510A) |
| 3 | 30475-0000 | VERTICAL GYRO | (ARCG-519A) |
| 2 | 30520-0014 | COMPUTER (ARC) | (CA-520A) |
| 1 | 30510-1014 | CONTROL UNIT (ARC) | (C-520A) |

EQUIPMENT TABLE

CESSNA AIRCRAFT CO COMMERCIAL AIRCRAFT DIVISION, WICHITA, KANSAS

| | NAME | DATE |
|---|---|---|
| DRAWN | RIDDER | 9-5-63 |
| GROUP | | 9-12-63 |
| CHECK | R. Stuck | 9-18-63 |
| PROJ | N.M. McPeters | 11-14-63 |

TITLE: WIRING DIAGRAM — NAV-O-MATIC 400 SYSTEM (OPT)

Cessna.

DWG NO 1270625

| SUPERSEDED BY | SUPERSEDES | MODEL: | REV. | PAGE: |
|---|---|---|---|---|
| | | 205 & 206 | | 17.26 |

FORM NO. 80-161

(SR4338)

| CHG LET | ZONE | REVISION | BY DATE | CHK APPD |
|---|---|---|---|---|

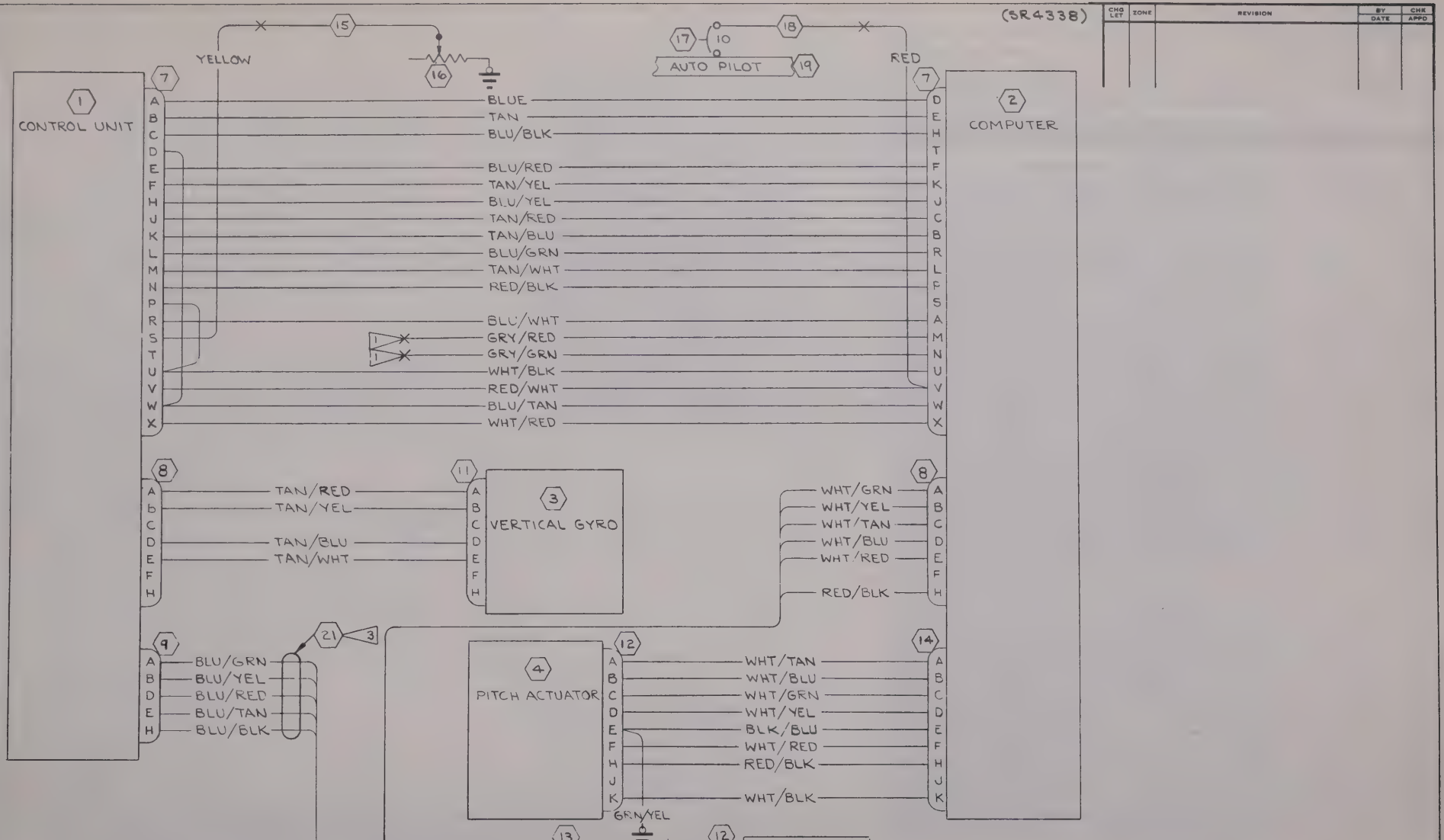


CESSNA AIRCRAFT CO., COMMERCIAL AIRCRAFT DIVISION, WICHITA, KANSAS

| | NAME | DATE |
|---|---|---|
| DRAWN | RIDLER | 7-5-63 |
| GROUP | | 9-23-63 |
| CHECK | R. Stuart | 9-18-63 |
| PROJ | N. McCarter | 11-14-63 |

TITLE: WIRING DIAGRAM — NAV-O-MATIC 400 SYSTEM (OPT)

Cessna

DWG NO 1270625

# TABLE OF CONTENTS

| E NO. | TITLE | DATE ISSUED | REV |
|---|---|---|---|
| | **1963 THRU 1964 SERIALS 21058086 THRU 21058510** | | |
| 1 | Radio Speaker, Phone, Jack, Mike, Light Rheostat & Power Circuits | 7-12-63 | A |
| 2 | Cessna ADF 500 (ARC Type 318A) | 12-4-63 | B-Inac. |
| 2.1 | Cessna ADF 500 (ARC Type 318A) | 12-4-63 | A |
| 3 | Cessna Nav/Com 500 (ARC Type 317A) | 10-17-63 | B-Inac. |
| 3.1 | Cessna Nav/Com 500 (ARC Type 317A) | 9-3-64 | A |
| 3.2 | Cessna Nav/Com 500 (ARC Type 317A) | 9-3-64 | Inac. |
| 4 | Cessna Transceiver 500 (ARC Type 302A) | 12-4-63 | A-Inac. |
| 4.1 | Cessna Transceiver 500 (ARC Type 302A) | 8-20-64 | A-Inac. |
| 5 | Cessna Nav/Com 300 (ARC Type 513A) | 12-4-63 | B-Inac. |
| 5.1 | Cessna Nav/Com 300 (ARC Type 513A) | 12-4-63 | A-Inac. |
| 6 | XMTR & Audio Selector Switches | 3-4-63 | Inac. |
| 7 | Nav-O-Matic 200 & 300 Systems | 5-27-63 | Inac. |
| 7.1 | Nav-O-Matic 200 & 300 Systems | 5-27-63 | |
| 8 | Cessna ADF 300 (ARC Type 521A) | 9-10-64 | A-Inac. |
| 9 | King KX-150 | 10-22-63 | Inac. |
| 9.1 | King KX-150 | 12-4-63 | Inac. |
| 9.2 | King KX-150A | 3-30-64 | A |
| 10 | Narco UGR-IA Glide Slope with NARCO Mark V or Mark X & VOA-5 | 7-10-63 | Inac. |
| 10.1 | Narco UGR-IA Glide Slope with NARCO Mark V or Mark X & VOA-5 | 7-10-63 | Inac. |
| 11 | Cessna Nav/Omni 500 (ARC Type 319A) | 12-4-63 | A-Inac. |
| 11.1 | Cessna Nav/Omni 500 (ARC Type 319A) | 12-4-63 | A-Inac. |
| 11.2 | Cessna Nav/Omni 500 | 9-10-64 | Inac. |
| 11.3 | Cessna Nav/Omni 500 | 9-11-64 | Inac. |
| 12 | Pantronics DXIO-D HF Transceiver Installation | 8-9-63 | Inac. |
| 12.1 | Pantronics DXIO-D HF Transceiver Installation | 8-9-63 | Inac. |
| 12.2 | Pantronics DXIO-D HF Transceiver Installation | 8-9-63 | Inac. |
| 12.3 | Pantronics DXIO-D HF Transceiver Installation | 8-9-63 | |
| 12.4 | Pantronics DXIO-D HF Transceiver Installation | 8-9-63 | |
| 12.5 | Pantronics DXIO-D HF Transceiver Installation | 8-9-63 | |

# TABLE OF CONTENTS


| PAGE NO. | TITLE | DATE ISSUED | RI |
|---|---|---|---|
| 17.13 | Marker Beacon Audio Switch | 12-28-62 | |
| 17.14 | Narco Mark V with VOA-4 or VOA-5 | 7-10-63 | Ina |
| 17.15 | Sunair T-5-DA | 3-4-63 | |
| 17.15.1 | Sunair T-5-DA | 3-4-63 | |
| 17.16 | Transmitter & Audio Selector Switch with King KA-10 AMP | 3-19-63 | A |
| 17.17 | Transmitter and Audio Selector Switches | 3-19-63 | A |
| 17.18 | King KY-90, KY-95, KX-100 & KX-120 | 6-6-63 | Ina |
| 17.18.1 | King KY-95, & KX-120 | 12-17-63 | A |
| 17.19 | Cessna Marker Beacon 300 (ARC Type R-502B) | 3-17-64 | C |
| 17.20 | Narco Mark-12 with VOA-4, VOA-5 or VOA-6 | 5-17-63 | |
| 17.21 | Narco UGR-1A Glideslope with Narco Mark 12 & VOA-5 | 7-12-63 | |
| 17.22 | Cessna Nav/Com 300 (ARC Type 514A) | 8-20-64 | A-I |
| 17.22.1 | Cessna Nav/Com 300 (ARC Type 514A) | 8-20-64 | In |
| 17.23 | Nav-O-Matic 400 System | 11-14-63 | |
| 17.23.1 | Nav-O-Matic 400 Systems | 11-14-63 | |

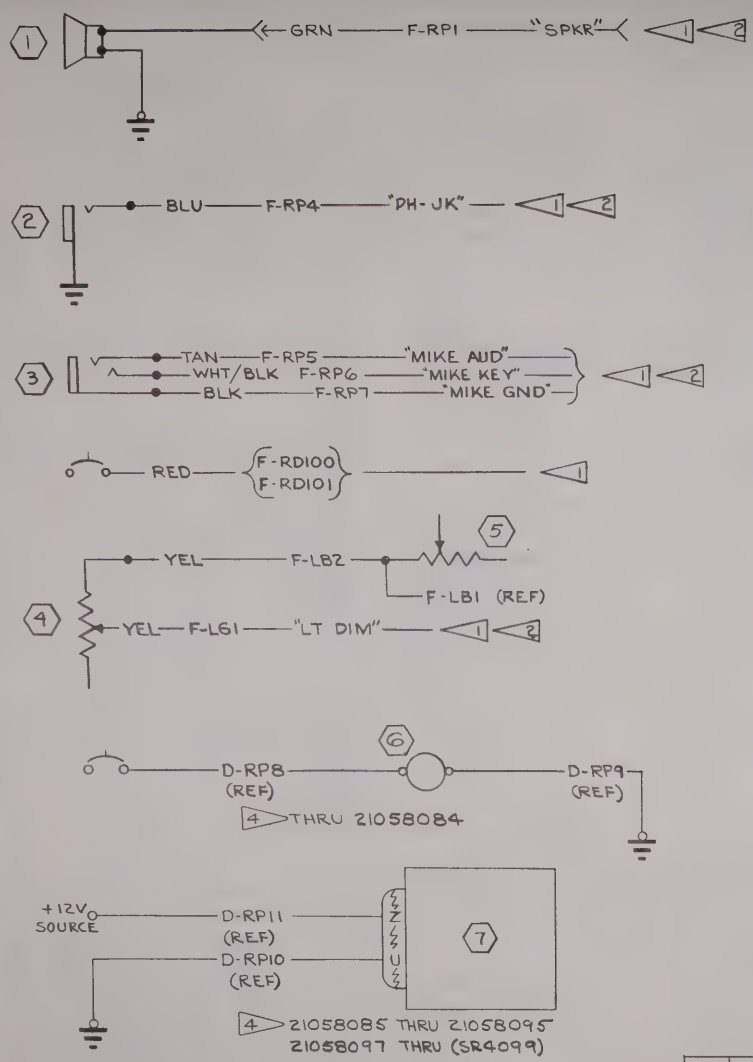


NOTE:

1. WIRES TO BE OF SUFFICIENT LENGTH TO ALLOW CONNECTION TO ALL POSSIBLE RADIO COMBINATIONS. TERMINALS TO BE ATTACHED TO WIRES AS REQD BY THE VARIOUS RADIO INSTALLATIONS
2. WIRES F-RP1, F-RP4, F-RP5, F-RP6, F-RP7 & F-LG1 TO BE CODED "SPKR", "PH-JK", "MIKE AUD", "MIKE KEY" "MIKE GND" & "LT DIM" RESPECTIVELY. NUMERICAL CODING PER CES 1100 IS OPTIONAL ON THESE WIRES THRU (SR4039).
3. AS REQD ON VARIOUS RADIO INSTALLATIONS.
4. WIRES WITH "D" PREFIX SHOWN ON THIS PAGE ARE DERIVED FROM 0770610, PAGE 17.1. THESE WIRES ARE PART OF 0770631 SERIES OPTIONAL ISO AMP INSTL.
5. COLOR CODED WIRES TO BE SUBSTITUTED FOR MACHINE STAMPED CODED WIRES (SR4039) & ON.

| CHG LET | REVISION | BY DATE | CHK APPD |
|---|---|---|---|
| A | BY REV; ADDED COLOR CODED WIRES TO FIELD & S/M; F-RP4, F-RP5, F-RP6 & F-RP1 22 GAGE WAS 20GAGE; ADDED NOTE 5; D-RP8 (REF) WAS D-RP11 (REF); D-RP9 (REF) WAS D-RP8 (REF); D-RP10 (REF) WAS D-RP12 (REF); OBSOLETED F-RD100; ADDED THRU (SR4039) TO NOTE 2 (SR4039-9) | WJR 6-5-63 | NEW TM RES NMC |

| | | | | | | | | | |
|---|---|---|---|---|---|---|---|---|---|
| 2 | YELLOW | F-LG1 | 18 | S-1460-18-4 | | 1 | SOLDER | 3 | (OPT) |
| | YELLOW | F-LB2 | 18 | S-1460-18-4 | | SOLDER | SOLDER | 3 | (OPT) |
| | RED | F-RD101 | 16 | S-1460-16-2 | | 1 | S-1367-2-8 | 3 | (OPT) |
| | | F-RD100 | 18 | | | 1 | S-1367-1-8 | 3 | (OPT) OBSOLETE |
| 2 | BLACK | F-RP7 | 22 | S-1460-22-0 | | 1 | SOLDER | 3 | (OPT) |
| | WHT/BLK | F-RP6 | 22 | S-1460-22-9-0 | | 1 | SOLDER | 3 | (OPT) |
| | TAN | F-RP5 | 22 | S-1460-22-10 | | 1 | SOLDER | 3 | (OPT) |
| | BLUE | F-RP4 | 22 | S-1460-22-6 | | 1 | SOLDER | 3 | (OPT) |
| 2 | GREEN | F-RP1 | 20 | S-1460-20-5 | | S-341-2 | S-341-2 | | (STD) |
| | WIRE CODE NO. | GA | MATERIAL | LG | TERMINALS | | N/A | SERIALS | |

WIRE TABLE

| ITEM NO | PART NO. | DESCRIPTION | INSTALLED ON |
|---|---|---|---|
| 7 | 0770640-3 | ISOLATION AMP | |
| 6 | 0770640-2 | ISOLATION AMP | |
| 5 | R-12½-B-R534 | RHEO, INST LT DIM (TRTA) | |
| 4 | R-12½-75-R534 | RHEO, RADIO DIM (TRTA) | |
| 3 | S-1102-1 | MICROPHONE JACK | |
| 2 | S-1103-1 | HEADPHONE JACK | |
| 1 | 0411062-9 | SPEAKER | |

EQUIPMENT TABLE

CESSNA AIRCRAFT CO COMMERCIAL AIRCRAFT DIVISION WICHITA, KANSAS

| | NAME | DATE |
|---|---|---|
| DRAWN | G WOOD | 9-10-62 |
| GROUP | | 10-15-62 |
| CHECK | R. Stuck | 10-17-62 |
| PROJ | W. McCarter | 10-17-62 |

TITLE: WIRING DIAGRAM — RADIO SPEAKER, 'PHONE JACK, MIKE, LIGHT RHEO. & POWER CIRCUITS

Cessna.

DWG NO: 1270405

| SUPERSEDED BY: | SUPERSEDES: | MODEL: 210 | REV: A | PAGE: 17.1 |
|---|---|---|---|---|

FORM NO. 80-161

(SR 3786-9)

| CHG LET | REVISION | BY DATE | CHK APPD |
|---|---|---|---|
| A | BY REVISION: ADD NOTE 2. DV-318A DYNAVERTER WAS POWER SUPPLY. | G L W 8-10-62 | RBS 11mc 11 |
| B | TITLE WAS ARC TYPE 318A ADF (OPT) | G L W 12-4-63 | RBS 11mc |

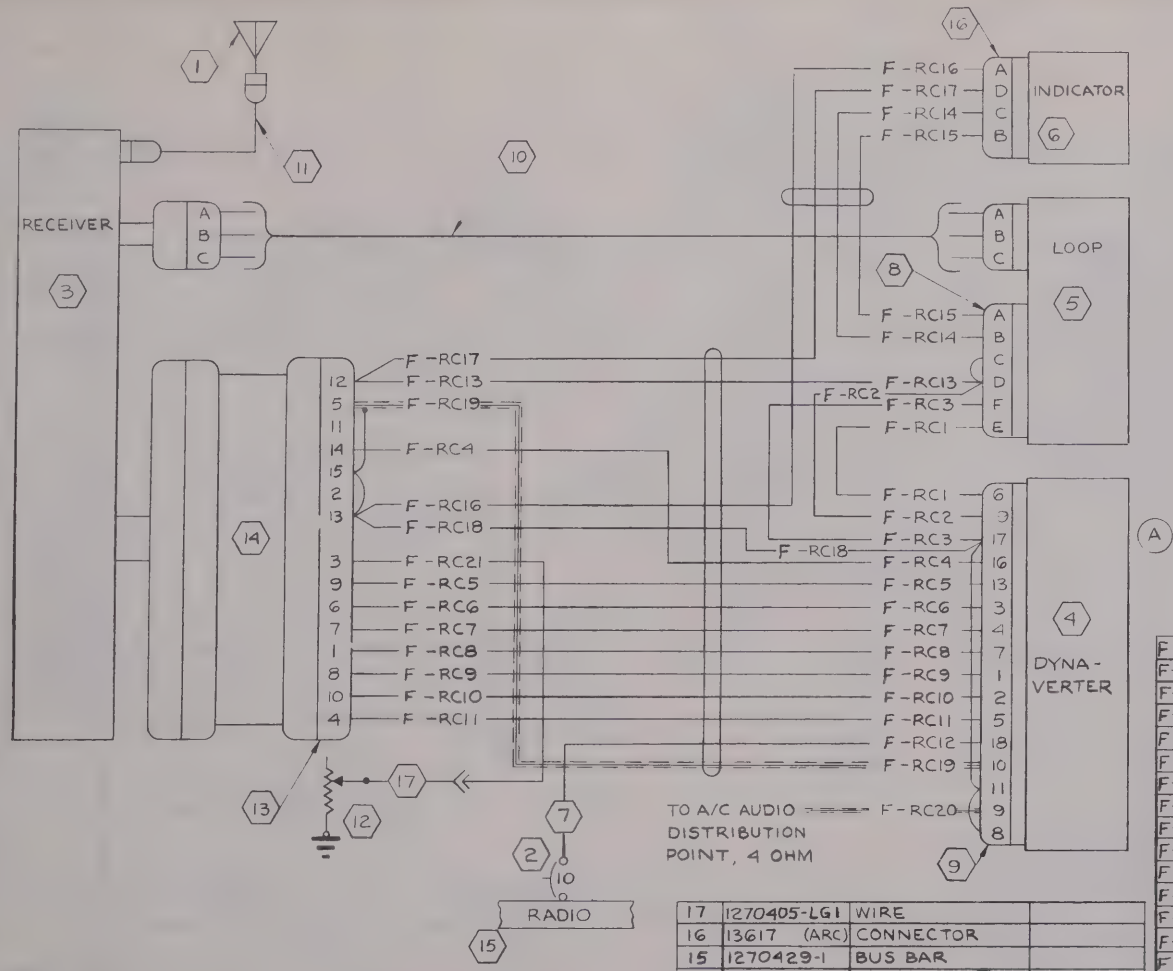


Inactive SER 21058221 W.O.E. 6-19-63 RBS 11mc

1/4 ON

| | | | | | | | |
|---|---|---|---|---|---|---|---|
| F-RC21 | 13 | | | SOLDER | S-341-2 | 1270406 | |
| F-RC20 | 20 S | | | | | | |
| F-RC19 | 22S | | | | SOLDER | | |
| F-RC18 | 16 | | | | | | |
| F-RC17 | 22 | | | | | | |
| F-RC16 | 22 | | | | | | |
| F-RC15 | 22 | | | | | | |
| F-RC14 | 22 | | | | | | |
| F-RC13 | 22 | | | SOLDER | | | |
| F-RC12 | 16 | | | S-1367-2-8 | | | |
| F-RC11 | 22 | | | SOLDER | | | |
| F-RC10 | 22 | | | | | | |
| F-RC9 | 22 | | | | | | |
| F-RC8 | 22 | | | | | | |
| F-RC7 | 22 | | | | | | |
| F-RC6 | 22 | | | | | | |
| F-RC5 | 22 | | | | | | |
| F-RC4 | 16 | | | | | | |
| F-RC3 | 22 | | | | | | |
| F-RC2 | 22 | | | | | | |
| F-RC1 | 22 | | | SOLDER | SOLDER | 1270406 | |
| WIRE CODE NO. | GA | MATERIAL | LG | TERMINALS | | N/A | SERIALS |

WIRE TABLE

| | | |
|---|---|---|
| 17 | 1270405-LG1 | WIRE |
| 16 | 13617 (ARC) | CONNECTOR |
| 15 | 1270429-1 | BUS BAR |
| 14 | 27873 (ARC) | FILTER KIT 1 |
| 13 | 26795 (ARC) | CONNECTOR KIT |
| 12 | 0111-351 (OHM) | RHEOSTAT |
| 11 | 18637 (ARC) | SENSE ANT. CABLE |
| 10 | 17985 | LOOP CABLE ASSY |
| 9 | 27881 | CONNECTOR |
| 8 | 19062 (ARC) | CONNECTOR |
| 7 | 1270405-RD100 | WIRE |
| 6 | IN-318A (ARC) | INDICATOR |
| 5 | L-11 | LOOP |
| 4 | DV-318A | DYNAVERTER |
| 3 | R-318A (ARC) | RECEIVER |
| 2 | S-1232-10 | CIRCUIT BREAKER |
| 1 | 1270420-2 | SENSE ANTENNA |
| ITEM NO. | PART NO. | DESCRIPTION / INSTALLED ON |

NOTES:

1. INSTALL 27873 FILTER KIT ON TSO INSTALLATIONS.
(A) 2. PINS 8, 9, 10, 11 OF (4) DYNAVERTER ARE OPEN EXCEPT WHEN OPTIONAL SPEAKER AMPLIFIER (ARC KIT NO. 27624) IS INSTALLED INSIDE THE DYNAVERTER. PIN 5 OF RECEIVER IS A 300 Ω AUDIO DISTRIBUTION POINT WHEN THE SPEAKER AMP KIT IS NOT USED. SCHEMATIC SHOWN IS FOR ADF SYSTEM WITH SPKR. AMP INSTALLED.

CESSNA AIRCRAFT CO. COMMERCIAL AIRCRAFT DIVISION WICHITA, KANSAS

| | NAME | DATE |
|---|---|---|
| DRAWN | G WOOD | 2-19-62 |
| GROUP | C.V. Martin | 4-20-62 |
| CHECK | R. Stuck | 4-30-62 |
| PROJ | J. McCaten | 5-2-62 |

TITLE: WIRING DIAGRAM — CESSNA ADF 500 (OPT) (ARC TYPE 318A)

Cessna.

DWG NO 1270405

| LET | | DATE | APPD |
|---|---|---|---|
| A | TITLE WAS ARC TYPE 318A ADF (OPT). ITEM NO. 6 WAS 1H-318A, ITEM NO. 5 WAS 6-11, ITEM NO. 9 WAS 3V-318A, ITEM NO. 3 WAS R-318A & ITEM NO. 14 WAS 27875 FILTER KIT | FEB 12-4-63 | RES |

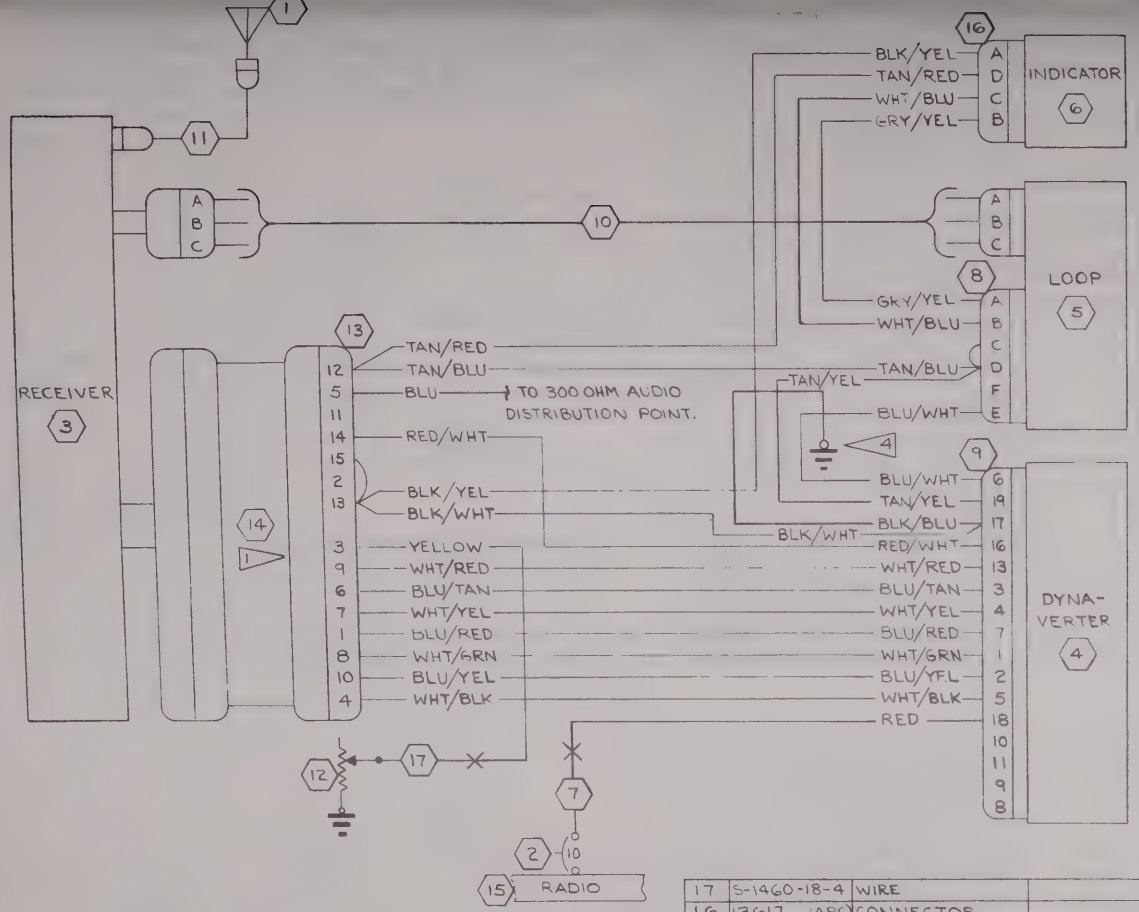


NOTES:

1. INSTALL 27859 FILTER ASSY ON TSO INSTALLATIONS.
2. WHERE WIRE CODE LISTS 2 COLORS, 1ST COLOR IS BASE COLOR & 2ND COLOR IS THE STRIPE.
3. INDICATOR & LOOP CONNECTIONS SHOWN ARE FOR TOP MOUNTED LOOP & SENSE ANTENNA.
4. BLK/BLU WIRE TO BE GROUNDED TO AIRFRAME NEAR LOOP BUT NOT CONNECTED TO LOOP.

| ITEM NO | PART NO | DESCRIPTION | INSTALLED ON |
|---|---|---|---|
| 17 | S-1460-18-4 | WIRE | |
| 16 | 13617 (ARC) | CONNECTOR | |
| 15 | 1270461-1 | BUS BAR | |
| 14 | 27859 (ARC) | FILTER ASSY 1 | |
| 13 | 26795 (ARC) | CONNECTOR KIT | |
| 12 | K-12½-75-RS34 | RHEOSTAT (TRTA) | |
| 11 | 18637 (ARC) | SENSE ANT. CABLE | |
| 10 | 17985 (ARC) | LOOP CABLE ASSY | |
| 9 | 27881 (ARC) | CONNECTOR | |
| 8 | 19062 (ARC) | CONNECTOR | |
| 7 | S-1460-16-2 | WIRE | |
| 6 | 27500 (ARC) | INDICATOR | |
| 5 | 18000 (ARC) | LOOP | |
| 4 | 26960-0014 (ARC) | DYNAVERTER | |
| 3 | 25400-1000 (ARC) | RECEIVER | |
| 2 | S-1360-10 | CIRCUIT BREAKER | |
| 1 | 1270420-2 | SENSE ANTENNA | |

EQUIPMENT TABLE

| WIRE CODE NO | GA | MATERIAL | LG | TERMINALS | | N/A | SERIALS |
|---|---|---|---|---|---|---|---|
| YELLOW | 18 | S-1460-18-4 | | S-1370-1 | SOLDER | 1270406 | |
| BLU | 22 | S-1460-22-6 | | | | | |
| BLK/WHT | 18 | S-1460-18-0-9 | | SOLDER | | | |
| TAN/RED | 22 | S-1460-22-10-2 | | | | | |
| BLK/YEL | 22 | S-1460-22-0-4 | | | | | |
| GRY/YEL | 22 | S-1460-22-8-4 | | | | | |
| WHT/BLU | 22 | S-1460-22-9-6 | | | | | |
| TAN/BLU | 22 | S-1460-22-10-6 | | SOLDER | | | |
| RED | 16 | S-1460-16-2 | | S-1370-2 | | | |
| WHT/BLK | 22 | S-1460-22-9-0 | | SOLDER | | | |
| BLU/YEL | 22 | S-1460-22-6-4 | | | | | |
| WHT/GRN | 22 | S-1460-22-9-5 | | | | | |
| BLU/RED | 22 | S-1460-22-6-2 | | | | | |
| WHT/YEL | 22 | S-1460-22-9-4 | | | | | |
| BLU/TAN | 22 | S-1460-22-6 10 | | | | | |
| WHT/RED | 22 | S-1460 22-9-2 | | | | | |
| RED/WHT | 18 | S-1460-18-2-9 | | SOLDER | | | |
| BLK/BLU | 22 | S-1460-22-0-6 | | S-1367-1-5 | | | |
| TAN/YEL | 22 | S-1460-22-10-4 | | SOLDER | | | |
| BLU/WHT | 22 | S-1460-22-6-9 | | SOLDER | SOLDER | 1270406 | |

WIRE TABLE

CESSNA AIRCRAFT CO., COMMERCIAL AIRCRAFT DIVISION, WICHITA, KANSAS

| | NAME | DATE |
|---|---|---|
| DRAWN | RIDDER | 6-19-63 |
| GROUP | Ed Moody | 7-8-63 |
| CHECK | R. Stuck | 7-3-63 |
| PROJ | M McCarter | 7-8-63 |

TITLE: WIRING DIAGRAM — CESSNA ADF 500 (ARC TYPE 318A) (OPT)

Cessna.

DWG NO 1270405

| SUPERSEDED BY | SUPERSEDES 1270405 PAGE 17.2 | MODEL 210 | REV A | PAGE 17.2.1 |
|---|---|---|---|---|

FORM NO. 80-161

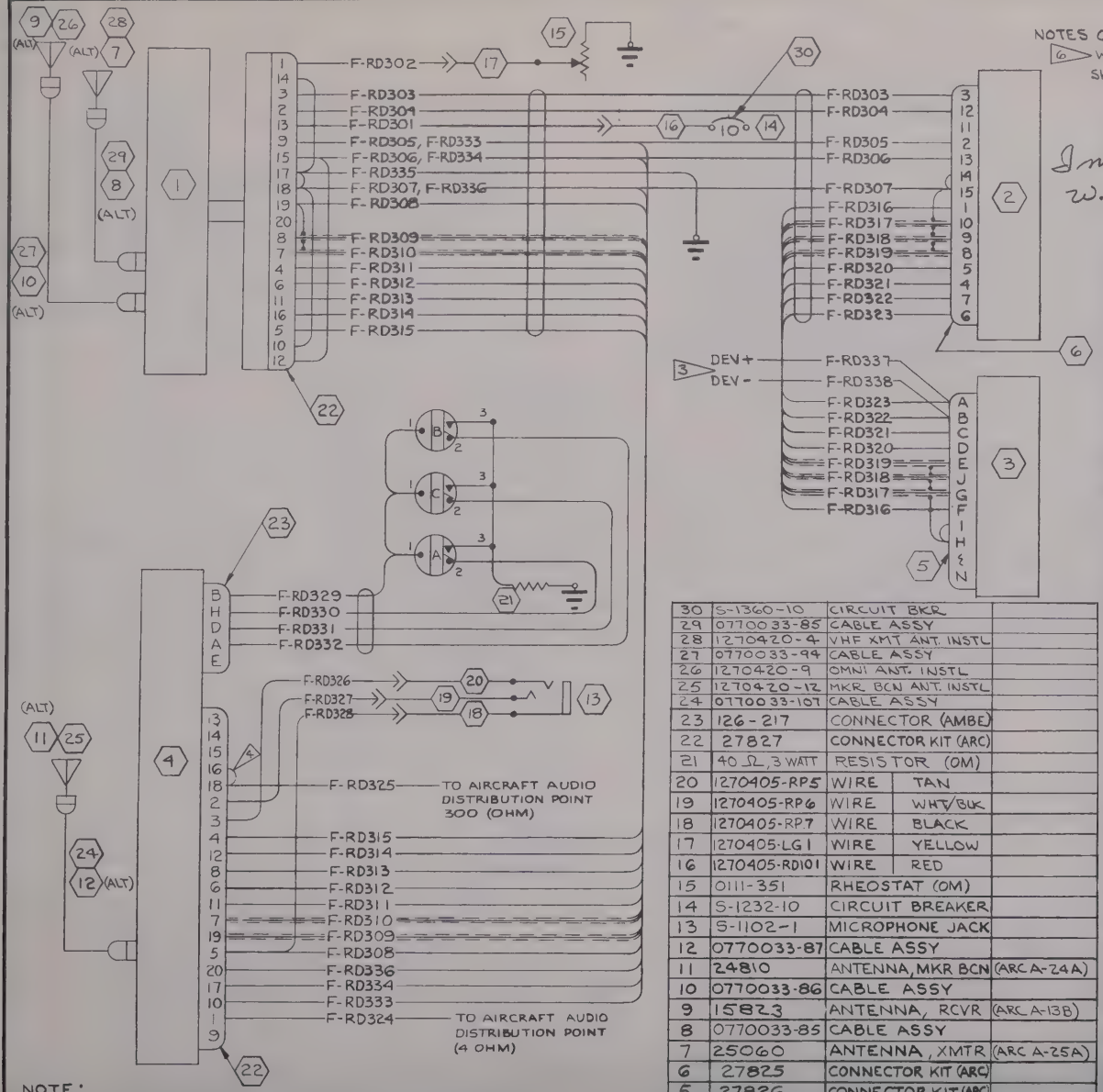


(SR 3786-9)

NOTES CONTINUED:

6 WIRE MATL PER S-1460 SHIELDED WIRE PER S-1461.

| CHG LET | REVISION | BY DATE | CHK APPD |
|---|---|---|---|
| A | BY REV: ADD NOTES 3, 4, 5, 6; ADD ITEMS 24 THRU 30; ADD WIRES F-RD337 & F-RD338; ADDED (ALT) TO FIELD; ADDED COLOR CODE TO WIRE TABLE; F-RD302 18GA WAS 22GA; D-RD306 18GA WAS 16 GA; INACTIVATED DRAWING; REMOVED NOTE 2. TITLE WAS ARC 317A COMM-NAV SYSTEM (SR4309) | WJR 8-6-63 | RRS OKM JM WJC |

Inactive SER (SR4304) & ON
W.J.R. 8-6-63 RRS

| | | | | | | |
|---|---|---|---|---|---|---|
| F-RD338 | 22 | GRY/GRN | — | SOLDER | 1270404 | |
| F-RD337 | 22 | GRY/RED | — | SOLDER | 1270404 | |
| F-RD321 | 22 | BLU/WHT | SOLDER | SOLDER | 1270404 | |
| F-RD336 | 16 | BLACK | SOLDER | SOLDER | | |
| F-RD335 | 16 | BLACK | S-1367-2-8 | SOLDER | | |
| F-RD334 | 16 | RED | SOLDER | | | |
| F-RD333 | 22 | TAN/BLU | | | | |
| F-RD332 | 22 | WHT/YEL | | | | |
| F-RD331 | 22 | WHT/GRN | | | | |
| F-RD330 | 22 | WHT/BLU | | | | |
| F-RD329 | 22 | WHT/TAN | | | | |
| F-RD328 | 22 | BLACK | | | | |
| F-RD327 | 22 | WHT/BLK | | | | |
| F-RD326 | 22 | TAN | | | | |
| F-RD325 | 22 | BLUE | | | | |
| F-RD324 | 20 | GREEN | | | | |
| F-RD323 | 22 | GRY/BLU | | | | |
| F-RD322 | 22 | WHT/RED | | | | |
| F-RD320 | 22 | WHT/TAN | | | | |
| F-RD319 | 22-5 | BLU/WHT | | | | |
| F-RD318 | 22-5 | BLU/RED | | | | |
| F-RD317 | 22-5 | BLU/BLK | | | | |
| F-RD316 | 22 | BLK/YEL | | | | |
| F-RD315 | 22 | WHT/BLU | | | | |
| F-RD314 | 22 | TAN/WHT | | | | |
| F-RD313 | 22 | BLU/GRN | | | | |
| F-RD312 | 22 | GRY/BLU | | | | |
| F-RD311 | 22 | WHT/YEL | | | | |
| F-RD310 | 22-5 | BLU/GRN | | | | |
| F-RD309 | 22-5 | BLU/YEL | | | | |
| F-RD308 | 22 | BLK/BLU | | | | |
| F-RD307 | 22 | BLK/RED | | | | |
| F-RD306 | 18 | RED/BLK | | | | |
| F-RD305 | 22 | TAN/BLU | | | | |
| F-RD304 | 22 | BLU/BLK | | | | |
| F-RD303 | 22 | BLU/YEL | SOLDER | | | |
| F-RD302 | 18 | YELLOW | S-341-2 | | | |
| F-RD301 | 16 | RED | S-341-1 | SOLDER | 1270404 | |
| WIRE CODE NO. | GA | MATERIAL COLOR CODE | LG | TERMINALS | N/A | SERIALS |

6 WIRE TABLE

| | | |
|---|---|---|
| 30 | S-1360-10 | CIRCUIT BKR |
| 29 | 0770033-85 | CABLE ASSY |
| 28 | 1270420-4 | VHF XMT ANT. INSTL |
| 27 | 0770033-94 | CABLE ASSY |
| 26 | 1270420-9 | OMNI ANT. INSTL |
| 25 | 1270420-12 | MKR. BCN ANT. INSTL |
| 24 | 0770033-107 | CABLE ASSY |
| 23 | 126-217 | CONNECTOR (AMBE) |
| 22 | 27827 | CONNECTOR KIT (ARC) |
| 21 | 40 Ω, 3 WATT | RESISTOR (OM) |
| 20 | 1270405-RP5 | WIRE TAN |
| 19 | 1270405-RP6 | WIRE WHT/BLK |
| 18 | 1270405-RP7 | WIRE BLACK |
| 17 | 1270405-LG1 | WIRE YELLOW |
| 16 | 1270405-RD101 | WIRE RED |
| 15 | 0111-351 | RHEOSTAT (OM) |
| 14 | S-1232-10 | CIRCUIT BREAKER |
| 13 | S-1102-1 | MICROPHONE JACK |
| 12 | 0770033-87 | CABLE ASSY |
| 11 | 24810 | ANTENNA, MKR BCN (ARC A-24A) |
| 10 | 0770033-86 | CABLE ASSY |
| 9 | 15823 | ANTENNA, RCVR (ARC A-13B) |
| 8 | 0770033-85 | CABLE ASSY |
| 7 | 25060 | ANTENNA, XMTR (ARC A-25A) |
| 6 | 27825 | CONNECTOR KIT (ARC) |
| 5 | 27826 | CONNECTOR KIT (ARC) |
| 4 | 28490-0014 | DYNAVERTER (ARC DV-317A-1) |
| 3 | 1 (ARC) | INDICATOR |
| 2 | 24660 | CONVERTER (ARC B-317A) |
| 1 | 24650-1000 | RCVR-XMTR (ARC RT-317A) |
| ITEM | PART NO. | DESCRIPTION INSTALLED ON |

NOTE:

1. MAY BE EITHER (ARC) NO. 27490 OR 27510.
2. ~~MAY BE EITHER TYPE DV-317A OR TYPE DV-317A-1 DV-317A DOES NOT INCLUDE MKR BCN LIGHT CIRCUITS.~~
3. OPTIONAL CONNECTION TO 28900 OMNI COUPLER (NAV-O-MATIC 300 SYSTEM)
4. OMIT JUMPER WHEN SPKR OUTPUT FROM PIN 1 IS NOT DESIRED.

CESSNA AIRCRAFT CO COMMERCIAL AIRCRAFT DIVISION, WICHITA, KANSAS

| | NAME | DATE |
|---|---|---|
| DRAWN | G WOOD | 3-29-62 |
| GROUP | C.V. Mart. | 4-24-62 |
| CHECK | P. Stuck | 4-30-62 |
| PROJ | H. McCarta | 5-2-62 |

TITLE: WIRING DIAGRAM — CESSNA NAV/COMM 500 (OPT) (ARC TYPE 317A)

Cessna.

DWG NO. 1270405

SUPERSEDED BY: 17-3 | SUPERSEDES: | MODEL: | REV. | PAGE:

(SR4304)

NOTES:
1. INDICATOR MAY BE EITHER (ARC) NO. 27490 OR 27510.
2. OPTIONAL CONNECTION TO (ARC) NO. 28900 OMNI COUPLER (NAV-O-MATIC 300 SYSTEM).

| CHG LET | REVISION | BY DATE | CHK APPD |
|---|---|---|---|
| A | ADDED JUMPER WIRE FROM PIN 15 TO PIN 14 ON 27825 CONNECTOR KIT; INACTIVATED DRAWING (SR4455)9 | WJR 7-7-64 | FRS 7M 4W |

Inactive SER 21058511 & ON
WJR 7-7-64 RRS HSW

| | | | | | | | |
|---|---|---|---|---|---|---|---|
| BLK/YEL | 22 | S-1460-22-0-4 | | SOLDER | SOLDER | 1270466 | |
| BLU/BLK | 22S | S-1461-22-6-0 | | | | | |
| BLU/RED | 22S | S-1461-22-6-2 | | | | | |
| BLU/WHT | 22S | S-1461-22-6-9 | | | | | |
| WHT/TAN | 22 | S-1460-22-9-10 | | | | | |
| BLU/WHT | 22 | S-1460-22-6-9 | | | | | |
| WHT/RED | 22 | S-1460-229-2 | | | | | |
| GRY/BLU | 22 | S-1460-22-8-6 | | | SOLDER | | |
| GRY/GRN | 22 | S-1460-22-8-5 | | | S-1370-1 | | |
| GRY/RED | 22 | S-1460-22-8-2 | | | S-1370-1 | | |
| BLU/TAN | 22 | S-1460-22-6-10 | | | | | |
| GREEN | 20 | S-1460-20-5 | | | S-1370-1 | | |
| BLACK | 22 | S-1460-22-0 | | | S-1370-1 | | |
| RED/WHT | 18 | S-1460-18-2-9 | | | S-1367-1-6 | | |
| TAN | 22 | S-1460-22-10 | | | S-1370-1 | | |
| WHT/BLK | 22 | S-1460-22-9-0 | | | S-1370-1 | | |
| BLUE | 22 | S-1460-22-6 | | | S-1370-1 | | |
| BLU/WHT | 22 | S-1460-22-6-9 | | | | | |
| BLU/TAN | 22 | S-1460-22-6-10 | | | | | |
| BLU/WHT | 22 | S-1460-22-6-9 | | | | | |
| BLU/TAN | 22 | S-1460-22-6-10 | SOLDER | | | | |
| BLK/WHT | 18 | S-1460-18-0-9 | S-1370-1 | | S-1367-1-8 | | |
| WHT/RED | 22 | S-1460-22-9-2 | SOLDER | | SOLDER | | |
| BLU/YEL | 22S | S-1461-22-6-4 | | | | | |
| WHT/YEL | 22 | S-1460-22-9-4 | | | SOLDER | | |
| WHT/GRN | 22 | S-1460-22-9-5 | | | | | |
| WHT/BLU | 22 | S-1460-22-9-6 | | | | | |
| WHT/TAN | 22 | S-1460-22-9-10 | | | | | |
| WHT/BLU | 22 | S-1460-22-9-6 | | | | | |
| TAN/WHT | 22 | S-1460-22-10-9 | | | | | |
| BLU/GRN | 22 | S-1460-22-6-5 | | | | | |
| GRY/BLU | 22 | S-1460-22-8-6 | | | | | |
| WHT/YEL | 22 | S-1460-22-9-4 | | | | | |
| BLU/GRN | 22S | S-1461-22-6-5 | | | SOLDER | | |
| BLU/YEL | 22S | S-1461-22-6-4 | | | S-1370-1 | | |
| BLK/BLU | 22 | S-1460-22-0-6 | | | SOLDER | | |
| BLACK | 16 | S-1460-16-0 | | | SOLDER | | |
| BLK/RED | 22 | S-1460-22-0-2 | | | SOLDER | | |
| BLACK | 16 | S-1460-16-0 | | | S-1367-2-8 | | |
| RED/BLU | 16 | S-1460-16-2-6 | | | SOLDER | | |
| RED/BLK | 18 | S-1460-18-2-0 | | | | | |
| TAN/BLU | 22 | S-1460-22-10-6 | | | | | |
| TAN/BLU | 22 | S-1460-22-10-6 | | | SOLDER | | |
| RED | 16 | S-1460-16-2 | | | S-1370-2 | | |
| BLU/BLK | 22 | S-1460-22-6-0 | | | SOLDER | | |
| BLU/YEL | 22 | S-1460-22-6-4 | | | SOLDER | | |
| YELLOW | 18 | S-1460-18-4 | | SOLDER | S-1370-1 | 1270466 | |
| WIRE CODE NO | GA | MATERIAL | LG | TERMINALS | | N/A | SERIALS |

WIRE TABLE

| ITEM NO | PART NO | DESCRIPTION | INSTALLED ON |
|---|---|---|---|
| 25 | MS25041-1-328 | LIGHT, CLEAR | |
| 24 | MS25041-10-328 | LIGHT, BLUE | |
| 23 | MS25041-4-328 | LIGHT, AMBER | |
| 22 | S-382-2 | SWITCH | |
| 21 | 40Ω 3 WATT | RESISTER (OM) | |
| 20 | 1270461-1 | BUS BAR | |
| 19 | S-1360-10 | CIRCUIT BREAKER | |
| 18 | RED | WIRE | |
| 17 | R-12½-75-RS34 | RHEOSTAT (TRTA) | |
| 16 | YELLOW | WIRE | |
| 15 | 0770033-107 | CABLE ASSY | |
| 14 | 0770033-85 | CABLE ASSY | |
| 13 | 0770033-94 | CABLE ASSY | |
| 12 | 1270420-12 | ANT. INSTL-MKR BCN | |
| 11 | 25060 | ANT. INSTL-VHF | (ARC |
| 10 | 1270420-9 | ANT. INSTL-OMNI | |
| 9 | S-1360-5 | CIRCUIT BREAKER | |
| 8 | 126-195 | CONNECTOR (AMBE) | |
| 7 | 27826 | CONNECTOR KIT (ARC) | |
| 6 | 27825 | CONNECTOR KIT (ARC) | |
| 5 | 27827 | CONNECTOR KIT (ARC) | |
| 4 | 31630-0014 | DYNAVERTER (ARC) | |
| 3 | 1 | INDICATOR (ARC) | |
| 2 | 24660 | CONVERTER (ARC) | |
| 1 | 24650-1000 | RCVR-XMTR (ARC) | |

EQUIPMENT TABLE

CESSNA AIRCRAFT CO. COMMERCIAL AIRCRAFT DIVISION, WICHITA, KANSAS

| | NAME | DATE |
|---|---|---|
| DRAWN | RIDDER | 8-6-63 |
| GROUP | [illegible] | 10-11-63 |
| CHECK | R. Stuck | 10-10-63 |
| PROJ | W. McCarter | 10-11-63 |

TITLE: WIRING DIAGRAM — CESSNA NAV/COMM 500 (OPT) (ARC TYPE 317A)

Cessna.

DWG NO. 1270405

| SUPERSEDED BY | PAGE | SUPERSEDES | MODEL | REV | PAGE |
|---|---|---|---|---|---|
| 1270475 | 2.41.0 | 1270405 PAGE 17.3 | 210 | A | 17.3.1 |

FORM NO. 80-161

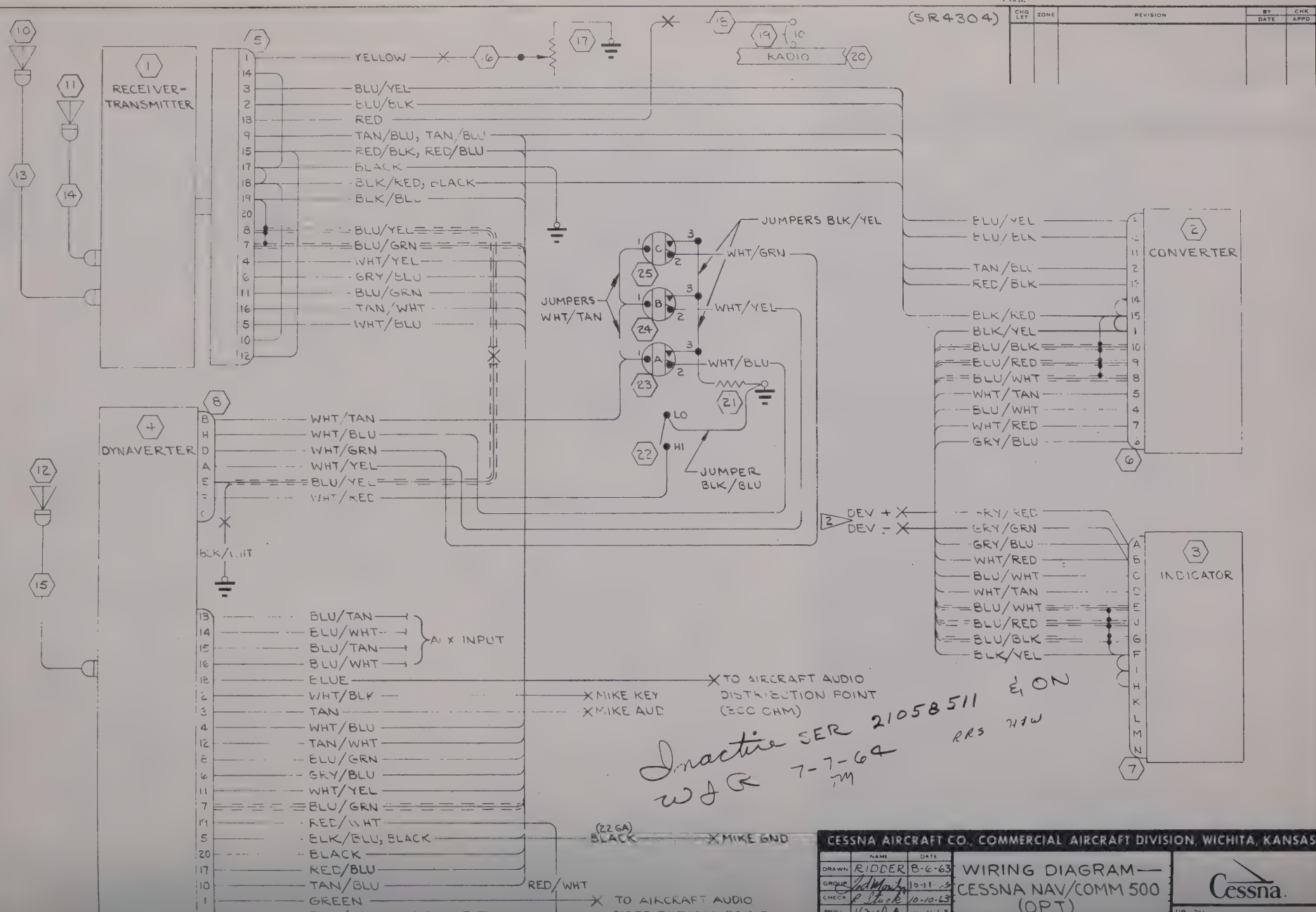


CESSNA AIRCRAFT CO., COMMERCIAL AIRCRAFT DIVISION, WICHITA, KANSAS

| | NAME | DATE |
|---|---|---|
| DRAWN | RIDDER | 8-6-63 |
| GROUP | | 10-11-63 |
| CHECK | R Stack | 10-10-63 |
| PROJ | W McCabe | 10-11-63 |

WIRING DIAGRAM — CESSNA NAV/COMM 500 (OPT)

(ARC TYPE 317A)

Cessna

DW. NO. 1270405

(SR 3936)

| CHG LET | REVISION | BY DATE | CHK APPD |
|---|---|---|---|
| A | TITLE WAS ARC TYPE 302A COMMUNICATION SYSTEM (OPT) | GLW 12-4-63 | RRS |

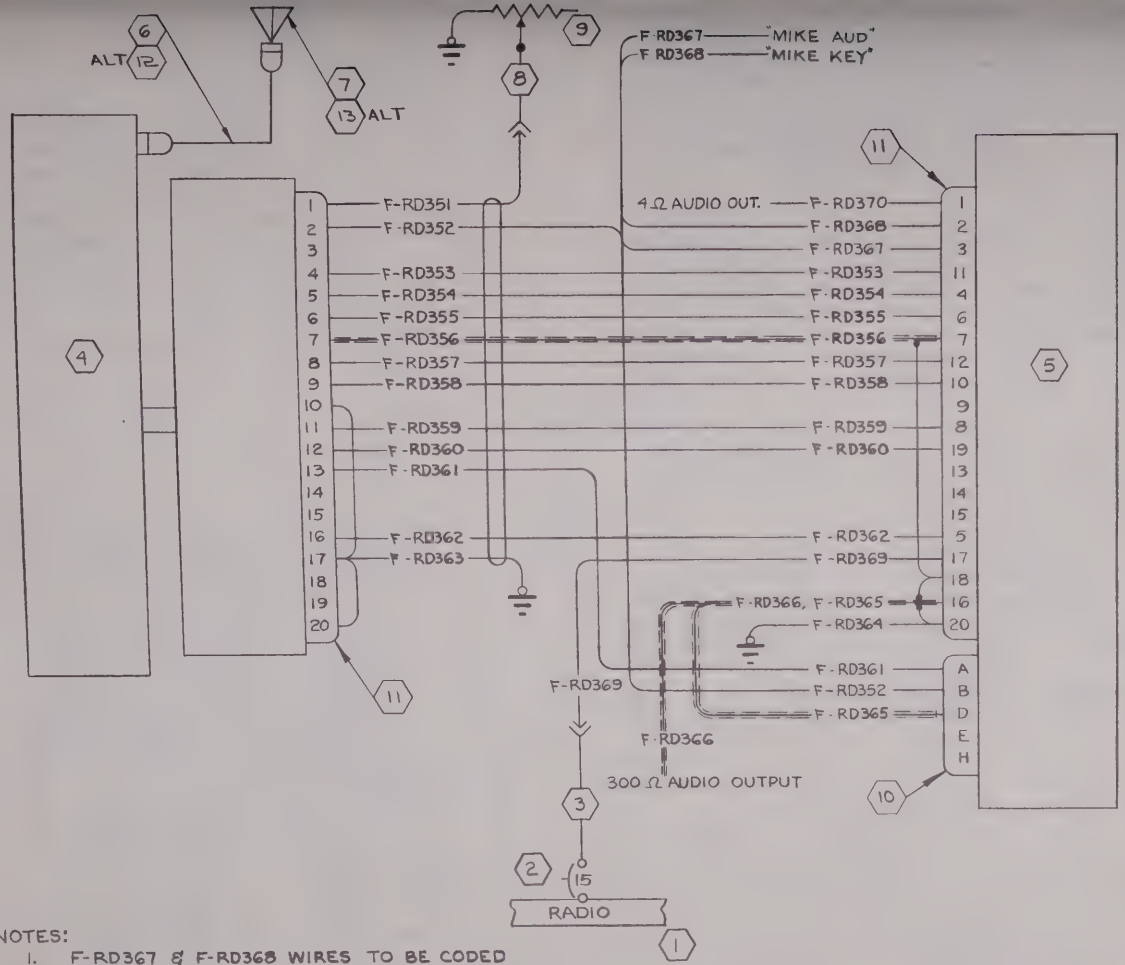


Inactive SER 21058221 & ON 6-25-63 HSW RRS NMC

NOTES:

1. F-RD367 & F-RD368 WIRES TO BE CODED "MIKE AUD" & "MIKE KEY" RESPECTIVELY. NUMERICAL CODING PER CES 1100 IS OPTIONAL ON THESE WIRES.

| ITEM NO | PART NO. | DESCRIPTION | INSTALLED ON |
|---|---|---|---|
| 13 | 1270420-4 | ANTENNA INSTL | |
| 12 | 0770033-56 | R.F. CABLE ASSY | |
| 11 | 28808 | PLUG (ARC) | |
| 10 | 28371 | PLUG (ARC) | |
| 9 | R12½-75-RS34 | RHEOSTAT (TRTA) | |
| 8 | 1210405-LG1 | WIRE | |
| 7 | A-25A | ANTENNA (ARC) | |
| 6 | 0770033-85 | R.F. CABLE ASSY | |
| 5 | DV-302A | DYNAVERTER (ARC) | |
| 4 | RT-302A | TRANSCEIVER (ARC) | |
| 3 | 1270405-RD101 | WIRE | |
| 2 | S-1232-15 | CIRCUIT BREAKER | |
| 1 | 1270429-1 | BUS BAR | |

EQUIPMENT TABLE

| WIRE CODE NO. | GA | MATERIAL | LG | TERMINALS | | N/A | SERIALS |
|---|---|---|---|---|---|---|---|
| F-RD370 | 20 | | | | SOLDER | 1270445 | |
| F-RD369 | 16 | | | S-341-1 | | | |
| F-RD368 | 22 | | | | | | |
| F-RD367 | 22 | | | | | | |
| F-RD366 | 22-5 | | | | | | |
| F-RD365 | 22-5 | | | SOLDER | | | |
| F-RD364 | 16 | | | S-341-1 | | | |
| F-RD363 | 16 | | | S-341-1 | | | |
| F-RD362 | 22 | | | SOLDER | | | |
| F-RD361 | 22 | | | | | | |
| F-RD360 | 18 | | | | | | |
| F-RD359 | 22 | | | | | | |
| F-RD358 | 22 | | | | | | |
| F-RD357 | 22 | | | | | | |
| F-RD356 | 22-5 | | | | | | |
| F-RD355 | 22 | | | | | | |
| F-RD354 | 22 | | | | | | |
| F-RD353 | 22 | | | | | | |
| F-RD352 | 22 | | | SOLDER | | | |
| F-RD351 | 22 | | | S-341-2 | SOLDER | 1270445 | |

WIRE TABLE

CESSNA AIRCRAFT CO COMMERCIAL AIRCRAFT DIVISION, WICHITA KANSAS

| | NAME | DATE |
|---|---|---|
| DRAWN | G. WOOD | 11-6-62 |
| GROUP | [signature] | 11-28-62 |
| CHECK | R. Stuck | 11-27-62 |
| PROJ | H. McCarter | 11-30-62 |

TITLE: WIRING DIAGRAM — CESSNA TRANSCEIVER 500 (OPT) (ARC TYPE 302A)

Cessna.

DWG NO: 1270405

SUPERSEDED BY: 1270405 PAGE 17.4.1 | SUPERSEDES | MODEL: 210 | REV: A | PAGE: 17.4

FORM NO. 80-161

(SR4039- )

| CHG LET | REVISION | BY / DATE | CHK / APPD |
|---|---|---|---|
| 2 | ADDED BLACK "MIKE GND" WIRE FROM PIN 8, N E/T 1470053-1 WAS A-25A ; INACTIVATED DRAWING (SR4455) | JR 7-8-64 | RRS |

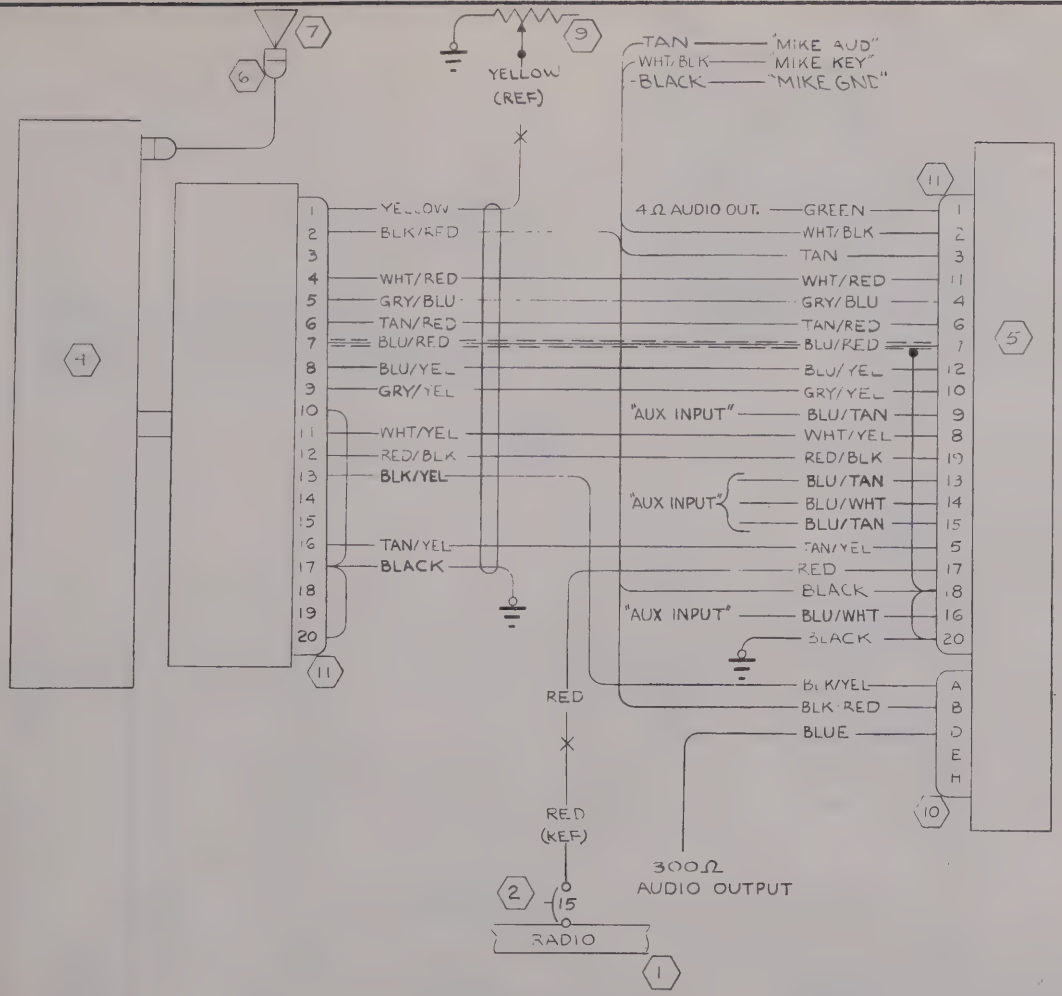


Inactive SER 21058511 & ON
WJR 7-8-64
RRS TM

| | | | | | | | |
|---|---|---|---|---|---|---|---|
| BLACK | 22 | S-1460-22-0 | | SOLDER | | 1270445 | |
| BLU/TAN | 22 | S-1460-22-6-10 | | SOLDER | | 1270445 | |
| BLU/TAN | 22 | S-1460-22-6-10 | | SOLDER | | | |
| BLU/TAN | 22 | S-1460-22-6-10 | | SOLDER | | | |
| BLU/WHT | 22 | S-1460-22-6-9 | | SOLDER | | | |
| BLU/WHT | 22 | S-1460-22-6-9 | | SOLDER | | | |
| BLACK | 16 | S-1460-16-0 | | SOLDER | S-1367-2-8 | | |
| RED/BLK | 18 | S-1460-18-2-0 | | SOLDER | SOLDER | | |
| BLUE | 22 | S-1460-22-[illegible] | | SOLDER | SOLDER | | |
| [illegible]/YEL | 22 | S-1460-22-6-4 | | SOLDER | SOLDER | | |
| BLU/RED | 22S | S-1461-22-[illegible] | | SOLDER | SOLDER | | |
| GREEN | 20 | S-1460-20-5 | | SOLDER | | | |
| WHT/BLK | 22 | S-1460-22-3-0 | | SOLDER | | | |
| TAN | 22 | S-1460-22-10 | | SOLDER | | | |
| TAN/YEL | 22 | S-1460-22-10-4 | | SOLDER | SOLDER | | |
| TAN/RED | 22 | S-1460-22-10-2 | | SOLDER | SOLDER | | |
| GRY/YEL | 22 | S-1460-22-8-4 | | SOLDER | SOLDER | | |
| GRY/BLU | 22 | S-1460-22-8-6 | | SOLDER | SOLDER | | |
| WHT/YEL | 22 | S-1460-22-9-4 | | SOLDER | SOLDER | | |
| WHT/RED | 22 | S-1460-22-9-2 | | SOLDER | SOLDER | | |
| BLK/YEL | 22 | S-1460-22-0-4 | | SOLDER | SOLDER | | |
| BLACK | 16 | S-1460-16-0 | | S-1367-2-8 | SOLDER | | |
| BLK/RED | 22 | S-1460-22-0-2 | | SOLDER | SOLDER | | |
| YELLOW | 18 | S-1460-18-4 | | SOLDER | S-1370-1 | | |
| RED | 16 | S-1460-16-2 | | SOLDER | S-1370-2 | 1270445 | |
| WIRE CODE NO | GA | MATERIAL | LG | TERMINALS | | N/A | SERIALS |

WIRE TABLE

| ITEM | PART NO | DESCRIPTION | INSTALLED ON |
|---|---|---|---|
| 11 | 28808 | PLUG (ARC) | |
| 10 | 28371 | PLUG (ARC) | |
| 9 | R-12½-75-RS34 | RHEOSTAT (TRTA) | |
| 8 | | | |
| 7 | 1470053-1 | ANTENNA | |
| 6 | 0770033-85 | RF CABLE ASSY | |
| 5 | 28420-0014 | DYNAVERTER (ARC) | |
| 4 | 28410-1000 | TRANSCEIVER (ARC) | |
| 3 | | | |
| 2 | S-1360-15 | CIRCUIT BREAKER | |
| 1 | 1270461-1 | BUS BAR | |

CESSNA AIRCRAFT CO., COMMERCIAL AIRCRAFT DIVISION, WICHITA, KANSAS

| | NAME | DATE |
|---|---|---|
| DRAWN | G WOOD | 6-25-63 |
| GROUP | [illegible] | 5-5-63 |
| CHECK | R. Stuck | 2-6-63 |
| PROJ | N. McCarter | 8-8-63 |

WIRING DIAGRAM — CESSNA TRANSCEIVER 500 (TYPE 302A)

Cessna.

DWG NO 1270405

SUPERSEDED BY | SUPERSEDES | MODEL | REV | PAGE

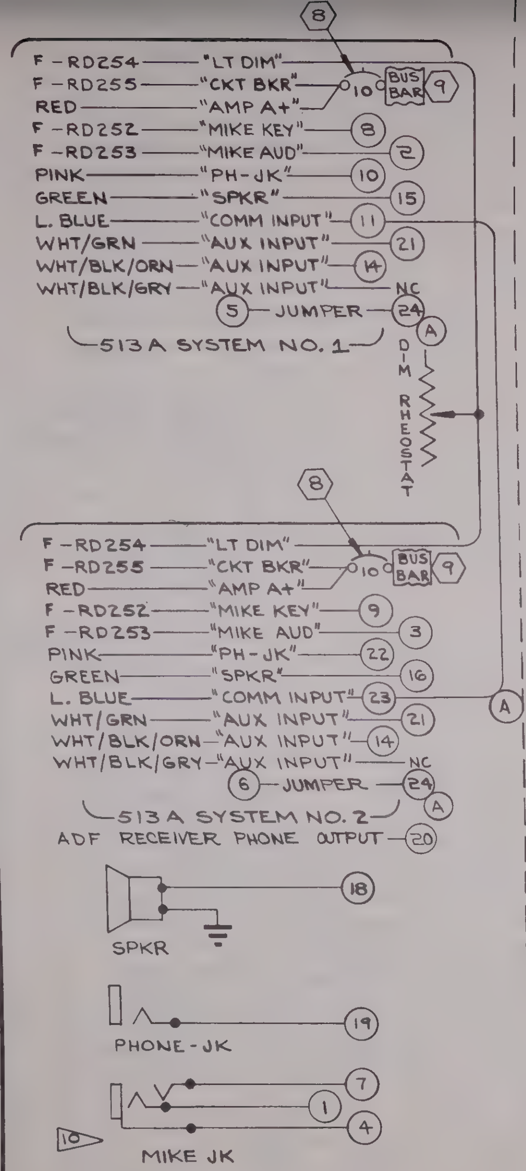


TYPICAL INTERCONNECTION OF DUAL 513A SYSTEM AND AN ADF RECEIVER (521A OR ADF-T12B) 11

NOTES: CONTINUED

7 "PH JK" WIRE IS CONNECTED TO "COMM-INPUT" CIRCUIT AND TO HEADSET JACK BY A SPKR-PHONE SWITCH WHEN AUDIO SWITCHING IS EMPLOYED. WHEN EXTERNAL AUDIO SWITCHING IS NOT REQD, CONNECT "PH JK" WIRE DIRECTLY TO HEADSET JACK AND JUMPER-WIRE PINS "J" & "EE" AT THE ACCESSORY UNIT.

8 TRANSMITTER SELECTOR SWITCH IS DESIGNED FOR USE WITH DUAL 513A SYSTEMS. AUDIO AMPLIFIER SYSTEMS ARE OPERATED "ALWAYS HOT" AS DESCRIBED IN NOTE 6. SPEAKER OUTPUTS FROM EACH SYSTEM DRIVE EITHER A 5 OHM, 5 WATT DUMMY LOAD OR THE SHIP'S SPEAKER AS DETERMINED BY THE TRANSMITTER SELECTED. (1270405 PAGE 17.6)

9 WHEN AN OPTIONAL NAV-O-MATIC AUTOPILOT WITH OMNI COUPLER IS COMBINED WITH A 513A SYSTEM, ADD (2) 22 GA. WIRES AS SHOWN TO PINS "K" AND "P". WIRES TO BE 24 INCH LONG & LABLED "DEV+" & "DEV-" AS SHOWN.

10 (A) MIKE JACK IS GNDED AT TRANS SELECTOR SWITCH ON DUAL INSTL SO MUTING RELAY WILL FUNCTION ONLY WHEN TRANS SEL. SWITCH IS CORRECTLY POSITIONED. I.E. WHEN TRANS #2 IS SELECTED & THERE IS NO 2ND TRANS INSTALLED; AUDIO MUTING WILL NOT OCCUR.

11 CIRCLED NUMBERS "◯" REFER TO TERMINALS ON TRANS-AUDIO SEL SWITCH ASSY (REF 1270405, PAGE 17.6)

(SR3901)

| CHG LET | REVISION | BY / DATE | CHK / APPD |
| --- | --- | --- | --- |
| A | BY REV: ADDED JUMPER BETWEEN (11) & (23) REVISED NOTE 10. ADDED JUMPER WIRES | HLW 10-1-63 | RRS |
| B | TITLE WAS ARC TYPE 513A VHF NAV/COM RADIO SYSTEM OPT | GLW 12-4-63 | RRS |

| WIRE CODE NO. | GA | MATERIAL | LG | TERMINALS | TERMINALS | TERMINALS | SERIALS |
| --- | --- | --- | --- | --- | --- | --- | --- |
| F-RD284 | 22 | | | SOLDER | SOLDER | 1270448 | |
| F-RD283 | 22 | | | | | | |
| F-RD282 | 22S | | | | | | 5 |
| F-RD281 | 22S | | | | | | |
| F-RD280 | 22 | | | | | | |
| F-RD279 | 22 | | | | | | |
| F-RD278 | 22 | | | | | | |
| F-RD277 | 22 | | | | | | |
| F-RD276 | 22 | | | | | | |
| F-RD275 | 16 | | | | | | |
| F-RD274 | 22 | | | | | | |
| F-RD273 | 22 | | | | | | |
| F-RD272 | 18 | | | | | | |
| F-RD271 | 22 | | | | | | |
| F-RD270 | 22 | | | | | | |
| F-RD269 | 22 | | | | | | |
| F-RD268 | 22S | | | | | | |
| F-RD267 | 22 | | | | | | |
| F-RD266 | 22 | | | | | | |
| F-RD265 | 20 | | | | | | |
| F-RD264 | 22 | | | | | | |
| F-RD263 | 16 | | | | | | |
| F-RD262 | 22 | | | | | | |
| F-RD261 | 22S | | | | | | |
| F-RD260 | 22S | | | | | | |
| F-RD259 | 22S | | | | | | |
| F-RD258 | 22S | | | | | | |
| F-RD257 | 22S | | | | | | |
| F-RD256 | 22S | | | | | | 5 |
| F-RD255 | 18 | | | | | | |
| F-RD254 | 20 | | | | | | |
| F-RD253 | 22S | | | | | | |
| F-RD252 | 22 | | | | SOLDER | | |
| F-RD251 | 16 | | | SOLDER | S-1367-2-8 | 1270448 | |

WIRE TABLE

Inactive SAR 2106 [illegible] W.J.R. 8-9-63 RRS

| ITEM NO | PART NO. | DESCRIPTION | INSTALLED ON |
| --- | --- | --- | --- |

EQUIPMENT TABLE

CESSNA AIRCRAFT CO. COMMERCIAL AIRCRAFT DIV. WICHITA KANSAS

| | NAME | DATE |
| --- | --- | --- |
| DRAWN | H WISE | 7-10-62 |
| GROUP | C. Martin | 7-13-62 |
| CHECK | R. Stuck | 7-13-62 |
| PROJ | W. McCosh | 7-17-62 |

TITLE: WIRING DIAGRAM — CESSNA NAV-COM 300 (OPT) (ARC TYPE 513A)

Cessna.

DWG NO: 1270405

SUPERSEDED BY | SUPERSEDES | MODEL: 210 | REV: B | PAGE: 17.5

FORM NO. 80-161

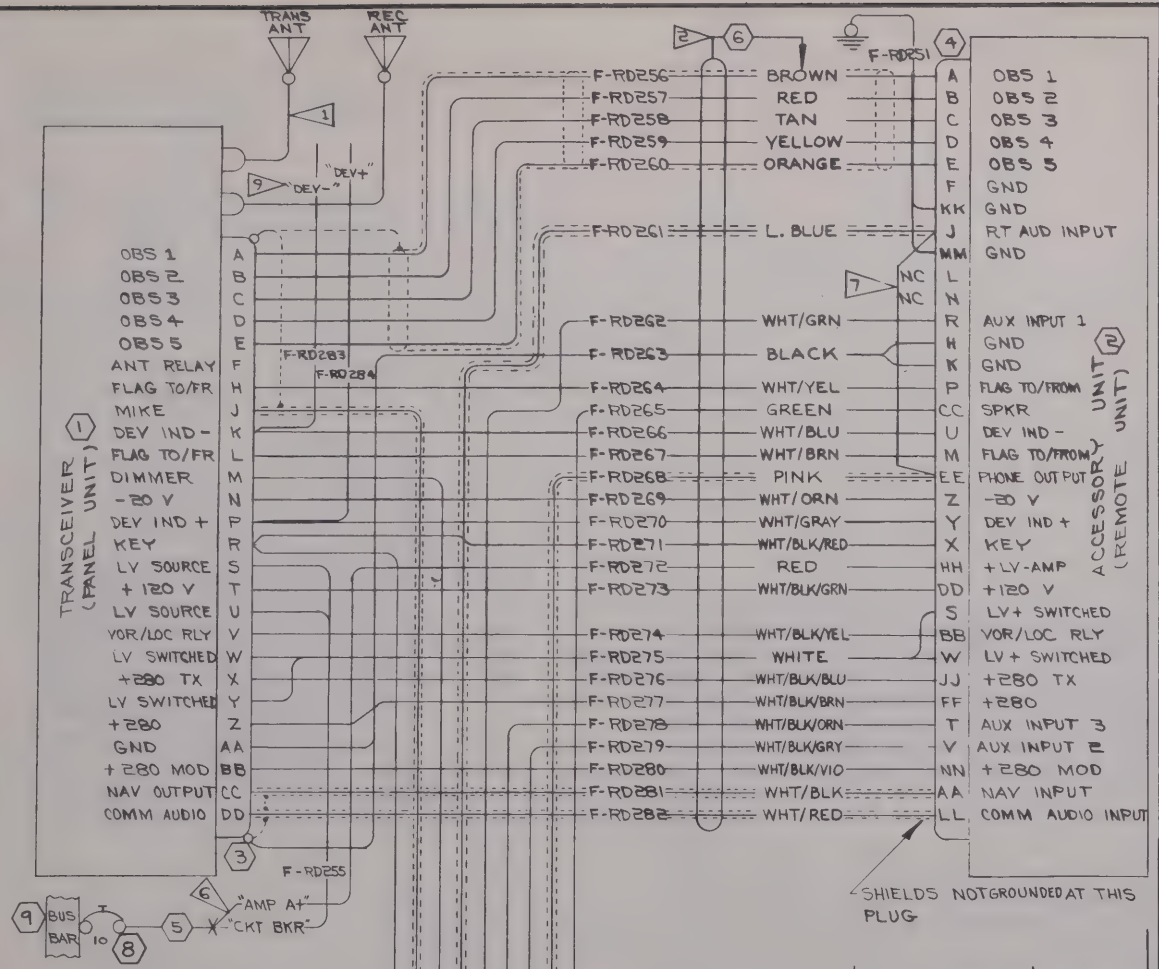


(SR3901)

| CHG LET | REVISION | BY DATE | CHK APPD |
|---|---|---|---|
| A | TITLE WAS ARC TYPE 513A VHF NAV/COM RADIO SYSTEM (OPT) | G L W 12-4-63 | 223 |

NOTES:

1. TRANSMITTING & RECEIVING ANTENNA LEAD-IN CABLES ARE ATTACHED TO DUST COVER CONNECTORS ON INST'L IN AIRPLANE.
2. (6) CABLE MATERIAL IS A SPECIAL 27 CONDUCTOR COLOR CODED CABLE WITH CONDUCTOR GAUGE & SHIELDS AS INDICATED IN B/M FOR INDIVIDUAL WIRES EXCEPT (5) WIRES BETWEEN PINS "A" TO "E" ARE ENCLOSED IN A COMMON SHIELD.
3. WIRES NO. F-RD251 THRU F-RD255 ARE INDIVIDUAL WIRES AND THEY ARE APPLICABLE TO ALL HARNESS ASSYS.
4. WIRES NO. F-RD252 THRU F-RD255 TO BE CODED "MIKE KEY", "MIKE AUD", "LT DIM", & "CKT BKR" RESPECTIVELY. NUMERICAL CODING PER CES 1100 IS OPTIONAL ON THESE WIRES.
5. NUMBERS ARE ASSIGNED TO THESE WIRES TO ALLOW FABRICATION & IDENTIFICATION OF THE HARNESS ASSY USING INDIVIDUAL WIRES WHEN COLOR CODED MULTI-CONDUCTOR CABLE MATERIAL IS NOT USED.
6. WIRE NO F-RD272 IS CONNECTED TO CKT BKR AS SHOWN WHEN AUDIO MODULATION PORTION OF RTA-513A IS UTILIZED AS AN "ALWAYS HOT" AUDIO ISOLATION AMPLIFIER FOR OTHER EQUIPMENT. CONNECT F-RD272 TO PIN W & Y WHEN THE AMPLIFIER IS TO BE ENERGIZED BY THE 513A POWER SWITCH.

(SEE PAGE 17.5 FOR NOTE 7 & HIGHER)

Inactive SER 21058221 & ON
W.J.R. 8-9-63

SEE PAGE 17.5 FOR WIRE TABLE

| ITEM | PART NO | DESCRIPTION | INSTALLED ON |
|---|---|---|---|
| 9 | 1270429-1 | BUS BAR | |
| 8 | S-1232-10 | CIRCUIT BREAKER | |
| 7 | | | |
| 6 | NO 161548 | CABLE MATL (ELAG) | |
| 5 | 1270405-RD101 | WIRE | |
| 4 | MRE39S-G-H/VL | CONNECTOR ASSY (WIQ) | |
| 3 | XMRE26S-G-1B017 | CONNECTOR ASSY (WIQ) | |
| 2 | RTA-513A | ACCESSORY UNIT | |
| 1 | RT-513A | TRANSCEIVER | |

| WIRE CODE NO | GA | MATERIAL | LG | TERMINALS | SERIALS |
|---|---|---|---|---|---|

WIRE TABLE

CESSNA AIRCRAFT CO COMMERCIAL AIRCRAFT DIVISION, WICHITA, KANSAS

| | NAME | DATE |
|---|---|---|
| DRAWN | H WISE | 7-10-62 |
| GROUP | C Martin | 7-13-62 |
| CHECK | R Black | 7-13-62 |
| PROJ | W McCarter | 7-17-62 |

TITLE: WIRING DIAGRAM — CESSNA NAV-COM 300 (OPT) (ARC TYPE 513A)

Cessna.

DWG NO 1270405

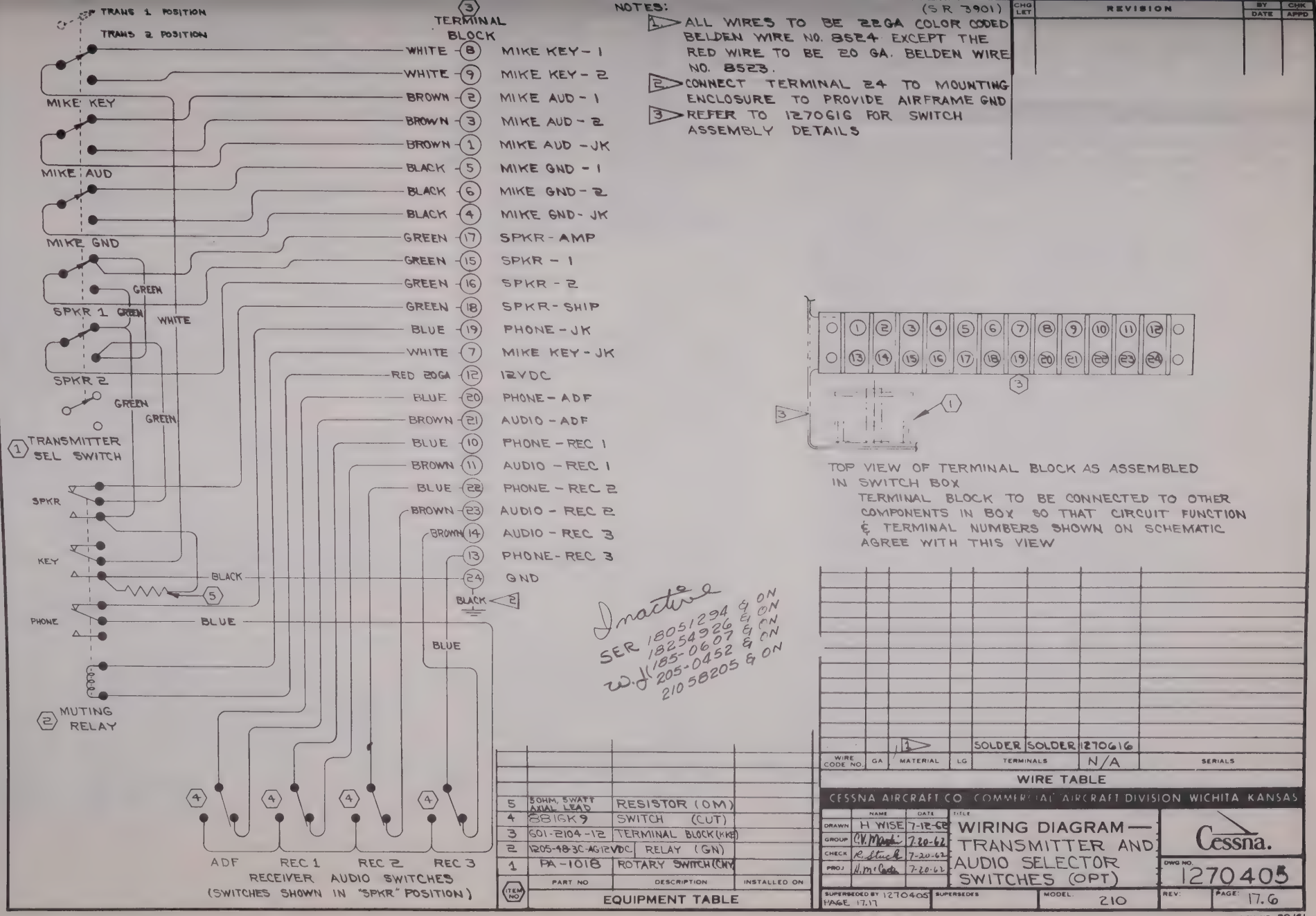


NOTES:

1. ALL WIRES TO BE 22GA COLOR CODED BELDEN WIRE NO. 8524 EXCEPT THE RED WIRE TO BE 20 GA. BELDEN WIRE NO. 8523.
2. CONNECT TERMINAL 24 TO MOUNTING ENCLOSURE TO PROVIDE AIRFRAME GND
3. REFER TO 1270616 FOR SWITCH ASSEMBLY DETAILS

(S R 3901)

| CHG LET | REVISION | BY DATE | CHK APPD |
|---|---|---|---|
| | | | |




TOP VIEW OF TERMINAL BLOCK AS ASSEMBLED IN SWITCH BOX
TERMINAL BLOCK TO BE CONNECTED TO OTHER COMPONENTS IN BOX SO THAT CIRCUIT FUNCTION & TERMINAL NUMBERS SHOWN ON SCHEMATIC AGREE WITH THIS VIEW

Inactive
SER 18051294 & ON
18254326 & ON
W.O. 185-0607 & ON
205-0452 & ON
21058205 & ON

| WIRE CODE NO. | GA | MATERIAL | LG | TERMINALS | | SERIALS |
|---|---|---|---|---|---|---|
| | 1 | | | SOLDER | SOLDER | 1270616 |
| | | | | | N/A | |

WIRE TABLE

| NO | PART NO | DESCRIPTION | INSTALLED ON |
|---|---|---|---|
| 5 | 50HM, 5WATT AXIAL LEAD | RESISTOR (OM) | |
| 4 | 8816K9 | SWITCH (CUT) | |
| 3 | 601-2104-12 | TERMINAL BLOCK (KKE) | |
| 2 | 1205-483C-AG12VDC | RELAY (GN) | |
| 1 | PA-1018 | ROTARY SWITCH (CNV) | |

EQUIPMENT TABLE

CESSNA AIRCRAFT CO COMMERCIAL AIRCRAFT DIVISION WICHITA KANSAS

| | NAME | DATE |
|---|---|---|
| DRAWN | H WISE | 7-12-62 |
| GROUP | C.V. Mauk | 7-20-62 |
| CHECK | R. Stuck | 7-20-62 |
| PROJ | H. McCosh | 7-20-62 |

TITLE: WIRING DIAGRAM — TRANSMITTER AND AUDIO SELECTOR SWITCHES (OPT)

Cessna.

DWG NO. 1270405

SUPERSEDED BY 1270405 PAGE 17.17 | SUPERSEDES | MODEL 210 | REV: | PAGE 17.6

FORM NO. 80-161

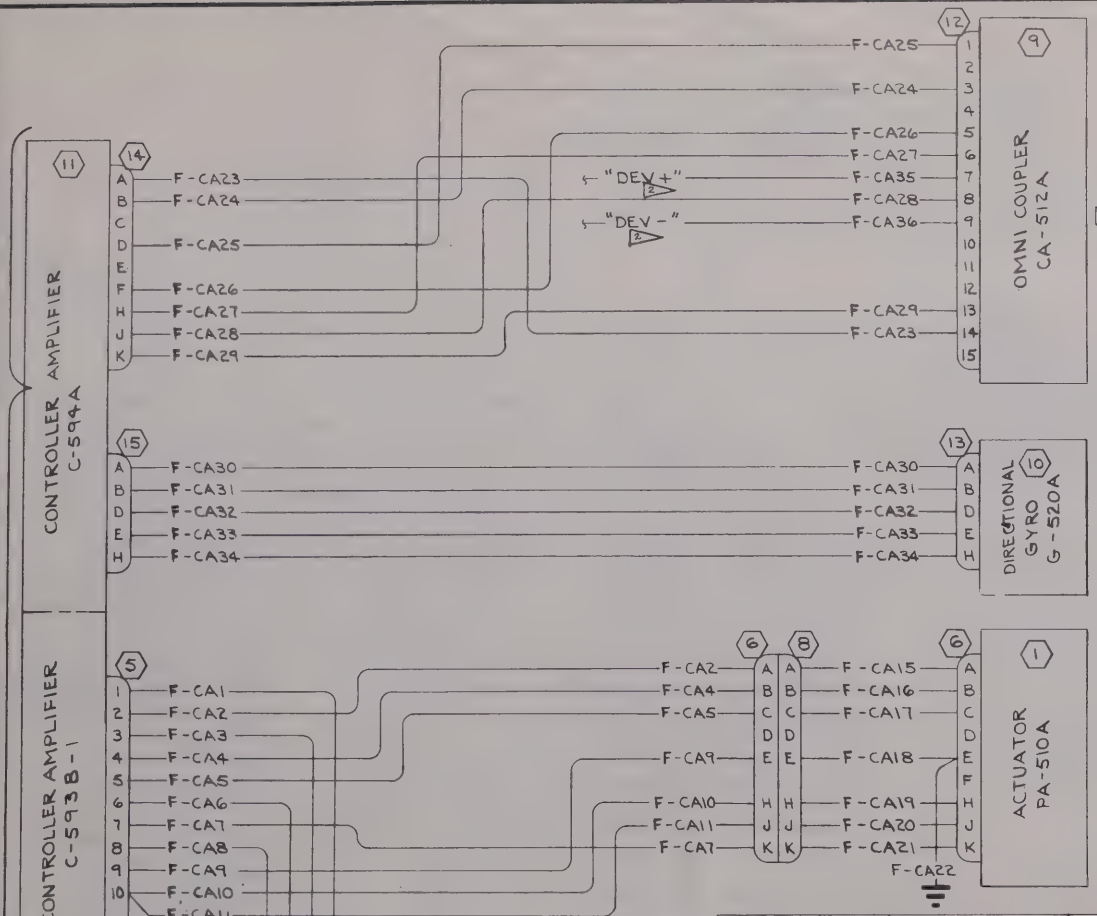


NOTES:

1. CABLE ASSYS MADE PER THIS DRAWING ARE USED ON MODELS OTHER THAN 210. CHANGES MADE TO THIS DRAWING SHOULD ALSO BE MADE TO WIRING DIAGRAMS ON THE OTHER MODELS USING THESE CABLE ASSYS.
2. "DEV+" AND "DEV-" TO BE STAMPED ON THESE WIRES AS SHOWN. NUMERICAL CODE IS OPTIONAL.

| CHG LET | REVISION | BY / DATE | CHK / APPD |
|---|---|---|---|
| A | IN E/T: G-515A RATE GYRO WAS G-520A; G-520A DIRECTIONAL GYRO WAS G-510A & REMOVE JUMPERS FROM 29410 PLUG. (CCC) | WJR 8-29-62 | RRS |

INACTIVE
SERIAL (SR 4240) & ON
H&W 5-6-63
RRS

| WIRE CODE NO. | GA | MATERIAL | LG | TERMINALS | | N/A | SERIALS |
|---|---|---|---|---|---|---|---|
| F-CA36 | 22 | | | SOLDER | SOLDER | 1270449 | |
| F-CA35 | 22 | | | | | | |
| F-CA34 | 22 | | | | | | |
| F-CA33 | 22 | | | | | | |
| F-CA32 | 22 | | | | | | |
| F-CA31 | 22 | | | | | | |
| F-CA30 | 22 | | | | | | |
| F-CA29 | 20 | | | | | | |
| F-CA28 | 22 | | | | | | |
| F-CA27 | 22 | | | | | | |
| F-CA26 | 22 | | | | | | |
| F-CA25 | 22 | | | | | | |
| F-CA24 | 20 | | | | | | |
| F-CA23 | 20 | | | | | | |
| F-CA22 | 22 | | | | | | |
| F-CA21 | 22 | | | | | | |
| F-CA20 | 20 | | | | | | |
| F-CA19 | 20 | | | | | | |
| F-CA18 | 22 | | | | | | |
| F-CA17 | 22 | | | | | | |
| F-CA16 | 22 | | | | | | |
| F-CA15 | 22 | | | SOLDER | | | |
| F-CA14 | 18 | | | S-1367-1-8 | | | |
| F-CA13 | 18 | | | S-1367-1-8 | | | |
| F-CA12 | 16 | | | SOLDER | | | |
| F-CA11 | 20 | | | | | | |
| F-CA10 | 20 | | | | | | |
| F-CA9 | 22 | | | | | | |
| F-CA8 | 22 | | | | | | |
| F-CA7 | 22 | | | | | | |
| F-CA6 | 22 | | | | | | |
| F-CA5 | 22 | | | | | | |
| F-CA4 | 22 | | | | | | |
| F-CA3 | 22 | | | | | | |
| F-CA2 | 22 | | | | | | |
| F-CA1 | 22 | | | SOLDER | SOLDER | 1270449 | |

WIRE TABLE

| | | |
|---|---|---|
| 21 | | |
| 20 | | |
| 19 | | |
| 18 | | |
| 17 | 1270429-1 | BUS BAR |
| 16 | S-1232-10 | CIRCUIT BREAKER |
| 15 | 28371-0005 | PLUG (ARC) |
| 14 | 28371-0009 | PLUG (ARC) |
| 13 | 28326-0005 | PLUG (ARC) |
| 12 | 29410 | PLUG (ARC) |
| 11 | C-594A | CONTROLLER AMP (ARC) |
| 10 | G-520A | DIRECTIONAL GYRO (ARC) |
| 9 | CA-512A | OMNI COUPLER (ARC) |
| 8 | 28505-0009 | PLUG (ARC) |
| 7 | 50328-0002 | PLUG (ARC) |
| 6 | 28326-0009 | PLUG (ARC) |
| 5 | 28336 | PLUG (ARC) |
| 4 | 28460 | PLUG (ARC) |
| 3 | C-593B-1 | CONTROLLER AMP (ARC) |
| 2 | G-515A | RATE GYRO (ARC) |
| 1 | PA-510A | ACTUATOR (ARC) |

CESSNA AIRCRAFT CO COMMERCIAL AIRCRAFT DIVISION WICHITA KANSAS

| | NAME | DATE |
|---|---|---|
| DRAWN | RIDDER | 8-6-62 |
| GROUP | C.V. Martin | 8-10-62 |
| CHECK | R. Stuck | 8-10-62 |
| PROJ | N. McCarter | 8-10-62 |

TITLE: WIRING DIAGRAM — NAV-O-MATIC 200 & 300 SYSTEMS (OPT)

Cessna.

DWG NO. 1270405

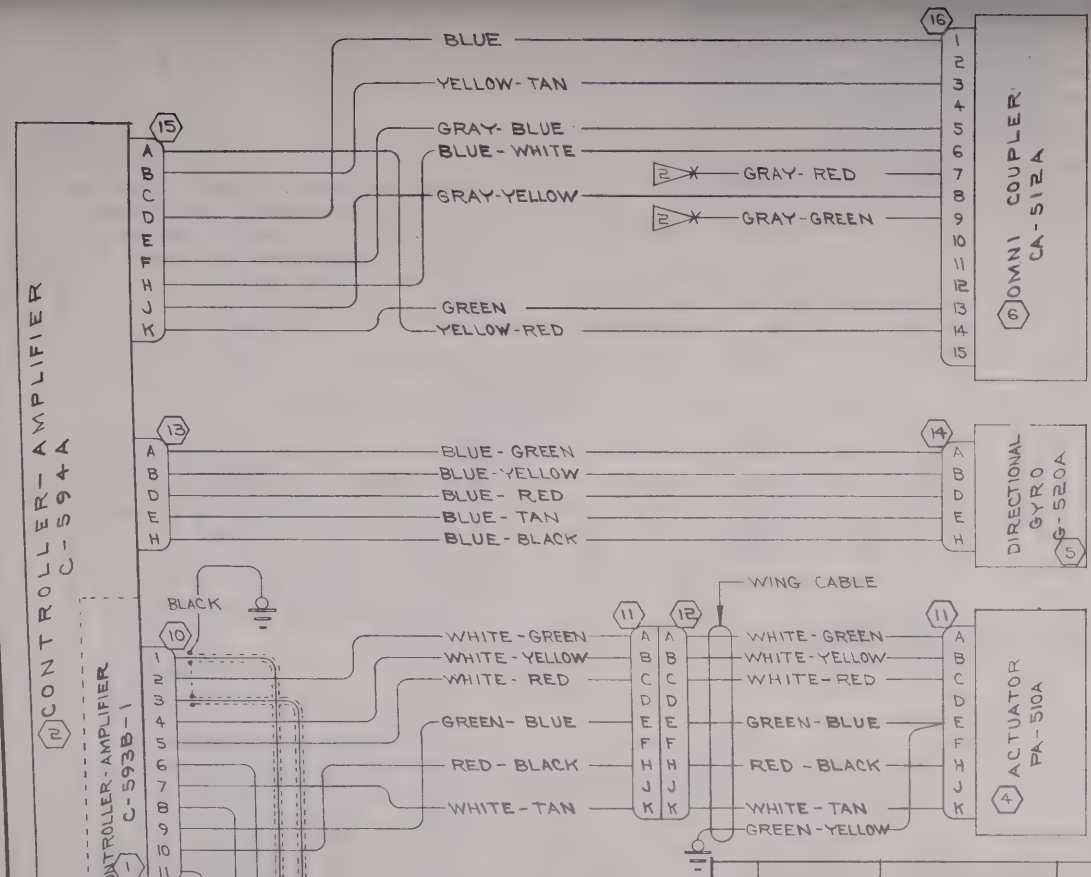


NOTES: (SR4240)

1. WHERE WIRE CODE LISTS 2 COLORS, 1ST COLOR IS BASE COLOR & 2ND COLOR IS THE STRIPE.
2. GRAY-RED WIRE IS "DEV+" CIRCUIT & GRAY-GREEN WIRE IS "DEV-" CIRCUIT FOR CONNECTION TO A VOR INDICATOR.
3. NAV-O-MATIC 300 SYSTEM INCLUDES ALL ITEMS EXCEPT (1). 200 SYSTEM INCLUDES (1)(3)(4)(7) & ASSOCIATED PLUGS & WIRES
4. CABLE ASSYS MADE PER THIS DWG ARE USED ON OTHER MODELS. CHANGES MADE ON THIS DIAGRAM SHOULD ALSO BE MADE TO REFERENCE DIAGRAMS ON THESE MODELS.

| CHG LET | REVISION | BY DATE | CHK APPD |
|---|---|---|---|

| WIRE CODE NO. | GA | MATERIAL | LG | TERMINALS | | NEXT ASSEMBLY | SERIALS |
|---|---|---|---|---|---|---|---|
| BLACK | 16 | S-1460-16-0 | | SOLDER | S-1367-2-8 | 1270449-1 | |
| YELLOW/RED | 20 | S-1460-20-4-2 | | | SOLDER | 1270449-5 | |
| GREEN | 20 | S-1460-20-5 | | | SOLDER | | |
| GRAY/GREEN | 22 | S-1460-22-8-5 | | | S-1370-0 | | |
| GRAY/RED | 22 | S-1460-22-8-2 | | | S-1370-0 | | |
| GRAY/YELLOW | 22 | S-1460-22-8-4 | | | SOLDER | | |
| BLUE/WHITE | 22 | S-1460-22-6-9 | | | | | |
| GRAY/BLUE | 22 | S-1460-22-8-6 | | | | | |
| YELLOW/TAN | 20 | S-1460-20-4-10 | | | | | |
| BLUE | 22 | S-1460-22-6 | | | | 1270449-5 | |
| BLUE/BLACK | 22 | S-1460-22-6-0 | | | | 1270449-4 | |
| BLUE/TAN | 22 | S-1460-22-6-10 | | | | | |
| BLUE/RED | 22 | S-1460-22-6-2 | | | | | |
| BLUE/YELLOW | 22 | S-1460-22-6-4 | | | | | |
| BLUE/GREEN | 22 | S-1460-22-6-5 | | | | 1270449-4 | |
| WHITE/GREEN | 22 | S-1460-22-9-5 | | | | 1270449-2 | |
| WHITE/YELLOW | 22 | S-1460-22-9-4 | | | | | |
| WHITE/RED | 22 | S-1460-22-9-2 | | | | | |
| GREEN/BLUE | 20 | S-1460-20-5-6 | | | | | |
| RED/BLACK | 18 | S-1460-18-2-0 | | | | | |
| WHITE/TAN | 22 | S-1460-22-9-10 | | | SOLDER | | |
| GREEN/YELLOW | 20 | S-1460-20-5-4 | | | S-1367-1-8 | 1270449-2 | |
| BLACK/WHITE | 18 | S-1460-18-0-9 | | | S-1367-1-8 | 1270449-3 | |
| RED/WHITE | 18 | S-1460-18-2-9 | | | S-1367-1-8 | 1270449-3 | |
| RED | 16 | S-1460-16-2 | | | S-1367-2-8 | 1270449-1 | |
| RED/BLACK | 18 | S-1460-18-2-0 | | | SOLDER | | |
| GREEN/BLUE | 20 | S-1460-20-5-6 | | | | | |
| TAN/WHITE | 22 | S-1460-22-10-9 | | | | | |
| WHITE/TAN | 22 | S-1460-22-9-10 | | | | | |
| TAN/BLUE | 22 | S-1460-22-10-6 | | | | | |
| WHITE/RED | 22 | S-1460-22-9-2 | | | | | |
| WHITE/YELLOW | 22 | S-1460-22-9-4 | | | | | |
| BLUE/RED | 22 | S-1461-22-6-2 | | | | | |
| WHITE/GREEN | 22 | S-1460-22-9-5 | | | | | |
| BLUE/YELLOW | 22 | S-1461-22-6-4 | | SOLDER | SOLDER | 1270449-1 | |

WIRE TABLE

| ITEM NO | PART NO. | DESCRIPTION | INSTALLED ON |
|---|---|---|---|
| 16 | 29410 | PLUG (ARC) | |
| 15 | 28371-0009 | PLUG (ARC) | |
| 14 | 28326-0005 | PLUG (ARC) | |
| 13 | 28371-0005 | PLUG (ARC) | |
| 12 | 28505-0009 | PLUG (ARC) | |
| 11 | 28326-0009 | PLUG (ARC) | |
| 10 | 28336 | PLUG (ARC) | |
| 9 | 50328-0002 | PLUG (ARC) | |
| 8 | 28460 | PLUG (ARC) | |
| 7 | S-1360-10 | CIRCUIT BREAKER | |
| 6 | CA-512A | OMNI COUPLER (ARC) | |
| 5 | G-520A | DIRECTION GYRO (ARC) | |
| 4 | PA-510A | ACTUATOR (ARC) | |
| 3 | G-515A | RATE GYRO (ARC) | |
| 2 | C-594A | CONTROLLER-AMP (ARC) | |
| 1 | C-593B-1 | CONTROLLER-AMP (ARC) | |

EQUIPMENT TABLE

CESSNA AIRCRAFT CO. COMMERCIAL AIRCRAFT DIVISION WICHITA KANSAS

| | NAME | DATE |
|---|---|---|
| DRAWN | H. WISE | 5-3-63 |
| GROUP | Ed Mosby | 5-16-63 |
| CHECK | R. Strick | 5-16-63 |
| PROJ | W. McCarter | 5-23-63 |

TITLE: WIRING DIAGRAM — NAV-O-MATIC 200 & 300 SYSTEMS (OPT)

Cessna.

DWG NO. 1270405

SUPERSEDED BY | SUPERSEDES 1270405, PAGE 17.7 | MODEL: 210 | REV: | PAGE: 17.7.1

FORM NO. 80-161

(SR 3900 )

| CHG LET | REVISION | BY / DATE | CHK / APPD |
|---|---|---|---|
| A | TITLE WAS ARC TYPE 521A ADF (OPT) ITEM 3 WAS IN-501A, ITEM 2 WAS L-521A, ITEM 1 WAS R-521A | GLW 12-4-63 | RRS |

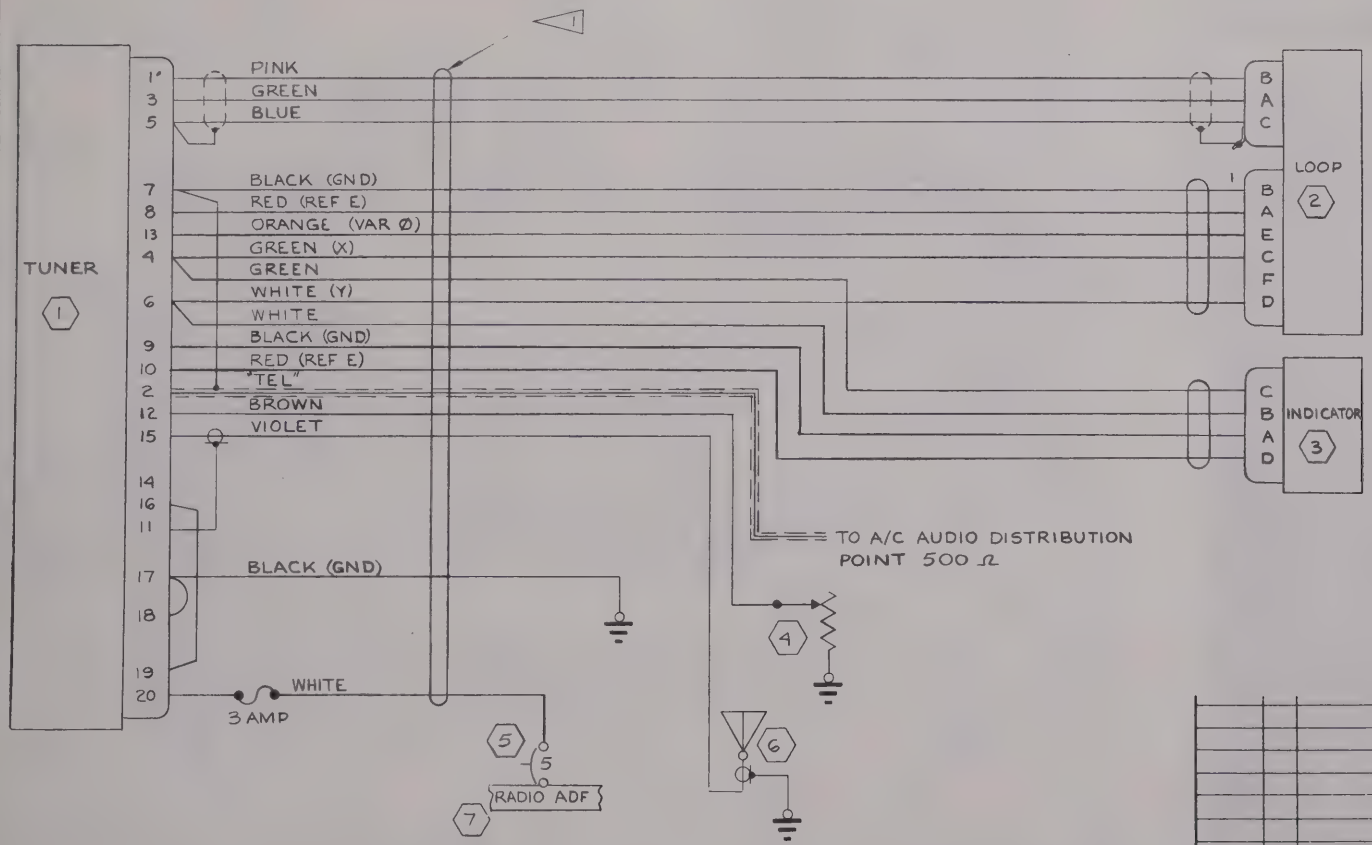


INACTIVE
8-25-64 LPB
SER 21058511 & ON
RRS

NOTES:

1. ALL WIRES ARE PART OF 28340-1000 TUNER. (REF 1270401 )
2. CONNECTIONS SHOWN ARE FOR TOP MOUNTED LOOP & SENSE ANTENNAS.

| | | | |
|---|---|---|---|
| 7 | 1270461-1 | BUS BAR | |
| 6 | 1270420-2 | LF ANTENNA | |
| 5 | S-1360-5 | CIRCUIT BREAKER | |
| 4 | R-12½-75-RS34 | RHEOSTAT (TRTA) | |
| 3 | 50310 | INDICATOR (ARC) | |
| 2 | 28360 | LOOP (ARC) | |
| 1 | 28340-1000 | TUNER (ARC) | |

| WIRE CODE NO | GA | MATERIAL | LG | TERMINALS | | | SERIALS |
|---|---|---|---|---|---|---|---|

WIRE TABLE

CESSNA AIRCRAFT CO. COMMERCIAL AIRCRAFT DIVISION, WICHITA, KANSAS

| | NAME | DATE |
|---|---|---|
| DRAWN | G WOOD | 8-10-62 |
| GROUP | [illegible] | 8-10-62 |
| CHECK | R. Stuck | 8-10-62 |
| PROJ | N. McCarter | 8-10-62 |

TITLE
WIRING DIAGRAM — CESSNA ADF 300 (OPT)
(ARC TYPE 521A)

Cessna.

DWG NO 1270405

(SR 3969)

| CHG LET | REVISION | BY DATE | CHK APPD |
|---|---|---|---|
| | | | |

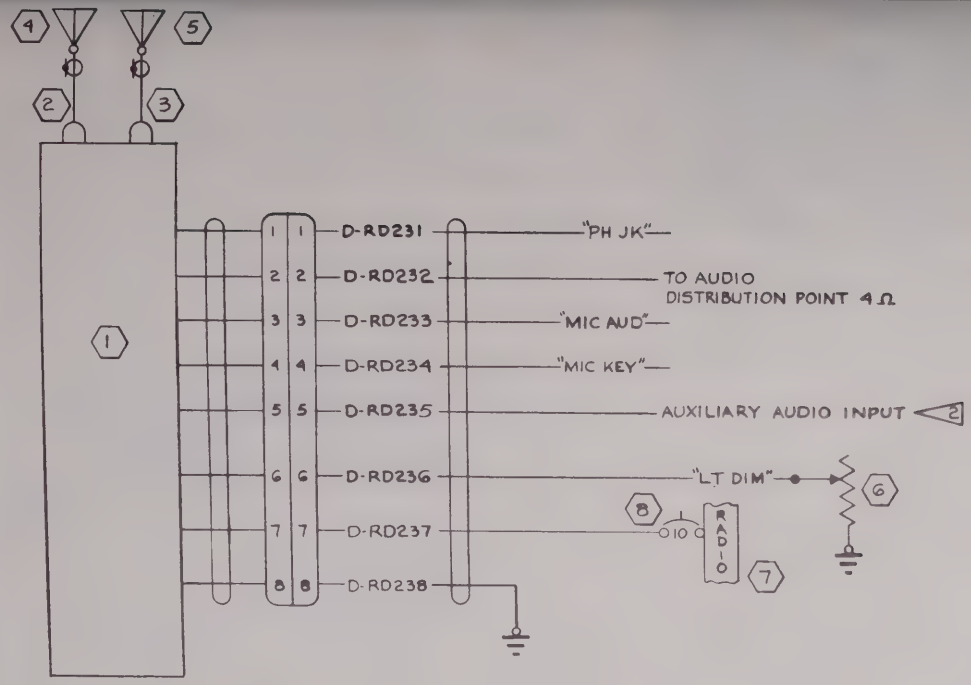


NOTES:

1. D-RD231, D-RD233, D-RD234 & D-RD236 WIRES TO BE CODED "PH-JK","MIKE AUD" "MIKE KEY" & "LT DIM" RESPECTIVELY. NUMERICAL CODING PER CES 1100 IS OPTIONAL ON THESE WIRES.
2. END OF WIRE TO BE COVERED WITH SLEEVING AND TIED INTO CABLE UNTIL USED.
3. "D" PREFIX USED ON THIS DRAWING INSTEAD OF "F" BECAUSE CABLE ASSYS ARE SAME AS THOSE USED IN MODEL 182. THIS DIAGRAM IS SCHEMATICALLY IDENTICAL TO 0770610 PAGE 17.8 WIRING DIAGRAM AND IS FOR REF ONLY.

| ITEM NO | PART NO. | DESCRIPTION | INSTALLED ON |
|---|---|---|---|
| 8 | S-1232-10 | CIRCUIT BREAKER | |
| 7 | 1270429-1 | BUS BAR | |
| 6 | R-12½-75-RS34 | RHEOSTAT (TRTA) | |
| 5 | 1270420-4 | VHF ANT. INSTL | |
| 4 | 1270420-9 | OMNI ANT. INSTL | |
| 3 | 0770033-95 | CABLE ASSY | |
| 2 | 0770033-97 | CABLE ASSY | |
| 1 | KX-150 | DIRECTOR (KG) | |

EQUIPMENT TABLE

| WIRE CODE NO. | GA | MATERIAL | LG | TERMINALS | | | SERIALS |
|---|---|---|---|---|---|---|---|
| D-RD238 | 16 | | | S-1367-28 | SOLDER | | |
| D-RD237 | 16 | | | S-1367-28 | | | |
| D-RD236 | 22 | | | SOLDER | | 1 | |
| D-RD235 | 22 | | | | | | |
| D-RD234 | 22 | | | SOLDER | | 1 | |
| D-RD233 | 22 | | | SOLDER | | 1 | |
| D-RD232 | 22 | | | | | | |
| D-RD231 | 22 | | | SOLDER | SOLDER | 1 | |

WIRE TABLE

CESSNA AIRCRAFT CO. COMMERCIAL AIRCRAFT DIVISION WICHITA KANSAS

| | NAME | DATE |
|---|---|---|
| DRAWN | G WOOD | 8-17-62 |
| GROUP | [illegible] | 9-5-62 |
| CHECK | R Stuck | 9-6-62 |
| PROJ | W McCarter | 9-7-62 |

TITLE: WIRING DIAGRAM — KING KX-150 (OPT)

Cessna.

DWG NO. 1270405

| SUPERSEDED BY | SUPERSEDES | MODEL | REV | PAGE |
|---|---|---|---|---|
| | | 210 | | 17.9 |

FORM NO. 80-161

| CHG LET | REVISION | BY / DATE | CHK / APPD |
|---|---|---|---|
| | | | |

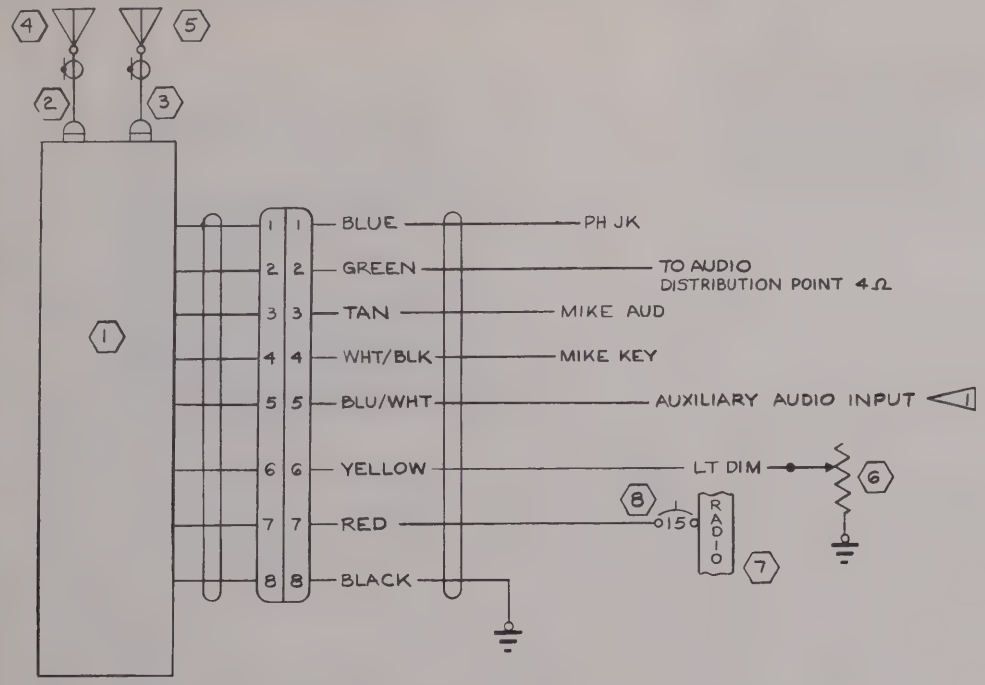


Inactive (SER 4417) & ON 11-21-63 Gw

NOTES:

1. END OF WIRE TO BE COVERED WITH SLEEVING AND TIED INTO CABLE UNTIL USED.
2. THIS DIAGRAM IS SCHEMATICALLY IDENTICAL TO 0770610 PAGE 17.8.1 WIRING DIAGRAM AND IS FOR REF ONLY.

| WIRE CODE NO. | GA | MATERIAL | LG | TERMINALS | | | SERIALS |
|---|---|---|---|---|---|---|---|
| BLU/WHT | 22 | S-1460-22-6-9 | | SOLDER | | | SER 21058221 & ON |
| BLACK | 16 | S-1460-16-0 | | | S-1367-2-8 | | |
| RED | 16 | S-1460-16-2 | | | S-1367-2-6 | | |
| YELLOW | 18 | S-1460-18-4 | | | SOLDER | | |
| WHT/BLK | 22 | S-1460-22-9-0 | | | | | |
| TAN | 22 | S-1460-22-10 | | | | | |
| GREEN | 20 | S-1460-20-5 | | | | | |
| BLUE | 22 | S-1460-22-6 | | SOLDER | | | SER 21058221 & ON |

WIRE TABLE

| KEY | PART NO. | DESCRIPTION | INSTALLED ON |
|---|---|---|---|
| 8 | S-1360-15 | CIRCUIT BREAKER | |
| 7 | 1270461-1 | BUS BAR | |
| 6 | R-12½-75-R534 | RHEOSTAT (TRTA) | |
| 5 | 1270420-4 | VHF ANT. INSTL | |
| 4 | 1270420-9 | OMNI ANT. INSTL | |
| 3 | 0770033-95 | CABLE ASSY | |
| 2 | 0770033-97 | CABLE ASSY | |
| 1 | KX-150 | DIRECTOR (KG) | |

CESSNA AIRCRAFT CO COMMERCIAL AIRCRAFT DIVISION, WICHITA, KANSAS

| | NAME | DATE |
|---|---|---|
| DRAWN | G WOOD | 9-13-63 |
| GROUP | [illegible] | 10-11-63 |
| CHECK | R. Stuck | 10-11-63 |
| PROJ | H. McCarter | 10-17-63 |

TITLE: WIRING DIAGRAM — KING KX-150 (OPT)

Cessna.

DWG NO. 270405

(SR 4417)

| LET | REVISION | DATE | APPD |
|---|---|---|---|
| | | | |

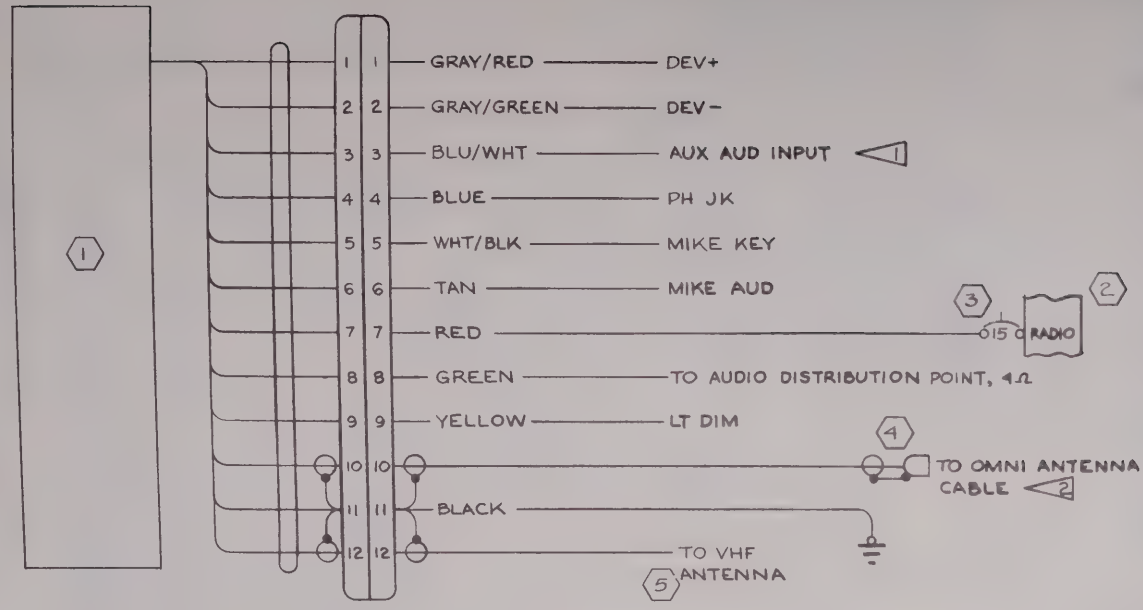


NOTES:

1. END OF WIRE TO BE COVERED WITH SLEEVING AND TIED INTO CABLE UNTIL USED.
2. 0770033-128 CABLE ASSY IS 17.0 LONG. CONNECTS TO OMNI ANT. CABLE ON SINGLE INSTL; CONNECTS TO "T" CONNECTOR ON DUAL INSTL.
3. CABLE ASSYS MADE PER THIS DWG ARE USED ON MODELS OTHER THAN 182. CHANGES MADE TO THIS DWG SHOULD ALSO BE MADE TO WIRING DIAGRAMS ON THE OTHER MODELS USING THESE CABLE ASSYS

| WIRE CODE NO. | GA | MATERIAL | LG | TERMINALS | | N/A | SERIALS |
|---|---|---|---|---|---|---|---|
| GRY/RED | 22 | S-1460-22-8-2 | | SOLDER | | 0770705 | |
| GRY/GRN | 22 | S-1460-22-8-5 | | | | | |
| BLU/WHT | 22 | S-1460-22-8-9 | | | | | |
| BLACK | 16 | S-1460-16-0 | | | S-1367-2-8 | | |
| RED | 16 | S-1460-16-2 | | | S-1367-2-6 | | |
| YELLOW | 18 | S-1460-18-9 | | | SOLDER | | |
| WHT/BLK | 22 | S-1460-22-9-0 | | | | | |
| TAN | 22 | S-1460-22-10 | | | | | |
| GREEN | 20 | S-1460-20-5 | | | | | |
| BLUE | 22 | S-1460-22-6 | | SOLDER | | 0770705 | |

WIRE TABLE

| ITEM NO | PART NO. | DESCRIPTION | INSTALLED ON |
|---|---|---|---|
| 5 | 0770033-131 | CABLE ASSY | |
| 4 | 0770033-128 | CABLE ASSY | |
| 3 | S-1360-15 | CIRCUIT BREAKER | |
| 2 | 0713743-1 | BUS BAR | |
| 1 | KX-150 | DIRECTOR (KG) | |

EQUIPMENT TABLE

CESSNA AIRCRAFT CO COMMERCIAL AIRCRAFT DIVISION WICHITA KANSAS

| | NAME | DATE |
|---|---|---|
| DRAWN | G WOOD | 10-29-63 |
| GROUP | | |
| CHECK | | |
| PROJ | | |

TITLE: WIRING DIAGRAM — KING KX-150A (OPT)

Cessna.

DWG NO: 1270405

SUPERSEDED BY:

SUPERSEDES: 1270405 PAGE 17.9.1

MODEL: 210

REV:

PAGE: 17.9.2

FORM NO. 80-161

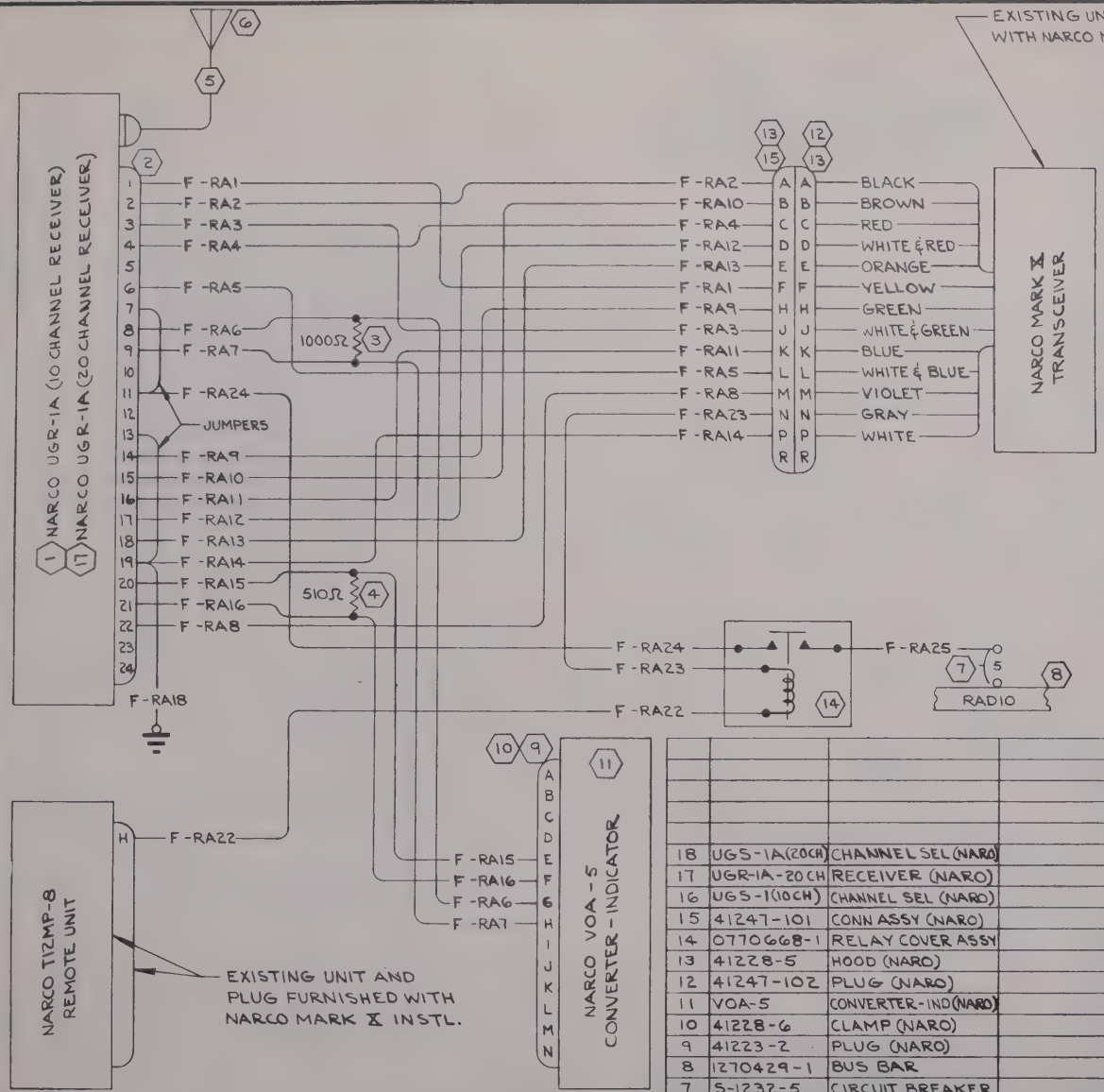


UGR-1A GLIDE SLOPE WITH NARCO MARK X & VOA-5

| ITEM | PART NO. | DESCRIPTION | INSTALLED ON |
|---|---|---|---|
| 18 | UGS-1A(20CH) | CHANNEL SEL (NARO) | |
| 17 | UGR-1A-20CH | RECEIVER (NARO) | |
| 16 | UGS-1(10CH) | CHANNEL SEL (NARO) | |
| 15 | 41247-101 | CONN ASSY (NARO) | |
| 14 | 0770668-1 | RELAY COVER ASSY | |
| 13 | 41228-5 | HOOD (NARO) | |
| 12 | 41247-102 | PLUG (NARO) | |
| 11 | VOA-5 | CONVERTER-IND (NARO) | |
| 10 | 41228-6 | CLAMP (NARO) | |
| 9 | 41223-2 | PLUG (NARO) | |
| 8 | 1270429-1 | BUS BAR | |
| 7 | S-1232-5 | CIRCUIT BREAKER | |
| 6 | 1270420-7 | ANTENNA INSTL | |
| 5 | 0770033-76 | RF CABLE | |
| 4 | 510Ω ± 5% ½ WATT | RES (OM) "LITTLE DEVIL" | |
| 3 | 1000Ω ± 10% ½ WATT | RES (OM) "LITTLE DEVIL" | |
| 2 | 41246-1 | CONN ASSY (NARO) | |
| 1 | UGR-1A-10CH | RECEIVER (NARO) | |

| CHG LET | REVISION | BY / DATE | CHK / APPD |
|---|---|---|---|
| | | | |

Inactive
SER 21058221, & ON
6-4-63
Gw H.P.W. RRS
Tm NMr

| WIRE CODE NO. | GA | MATERIAL | LG | TERMINALS | | N/A | SERIALS |
|---|---|---|---|---|---|---|---|
| F-RA26 | 22 | | | SOLDER | SOLDER | 1270452 | |
| F-RA25 | 18 | | | | S-1367-1-8 | | |
| F-RA24 | 18 | | | | SOLDER | | |
| F-RA23 | 18 | | | | SOLDER | | |
| F-RA22 | 18 | | | SOLDER | SOLDER | 1270452 | |
| F-RA18 | 18 | | | SOLDER | S-1367-1-8 | 1270452 | |
| F-RA17 | 18 | | | | S-1367-1-8 | | |
| F-RA16 | 22 | | | | SOLDER | | |
| F-RA15 | 22 | | | | | | |
| F-RA14 | 22 | | | | | | |
| F-RA13 | 22 | | | | | | |
| F-RA12 | 22 | | | | | | |
| F-RA11 | 22 | | | | | | |
| F-RA10 | 22 | | | | | | |
| F-RA9 | 22 | | | | | | |
| F-RA8 | 18 | | | | | | |
| F-RA7 | 22 | | | | | | |
| F-RA6 | 22 | | | | | | |
| F-RA5 | 22 | | | | | | |
| F-RA4 | 22 | | | | | | |
| F-RA3 | 22 | | | | | | |
| F-RA2 | 22 | | | | | | |
| F-RA1 | 22 | | | SOLDER | SOLDER | 1270452 | |

WIRE TABLE

CESSNA AIRCRAFT CO. COMMERCIAL AIRCRAFT DIVISION WICHITA KANSAS

| | NAME | DATE |
|---|---|---|
| DRAWN | RIDDER | 8-27-62 |
| GROUP | C.V. Martin | 9-20-62 |
| CHECK | R. Stuck | 9-20-62 |
| PROJ | H. McCarter | 9-24-62 |

TITLE: WIRING DIAGRAM — NARCO UGR-1A GLIDE SLOPE WITH NARCO MARK V OR MARK X & VOA-5 (OPT)

Cessna.

DWG NO. 1270405

SUPERSEDED BY | SUPERSEDES | MODEL | REV | PAGE

(SR 3987)

| CHG LET | REVISION | BY DATE | CHK APPD |
|---|---|---|---|
| | | | |

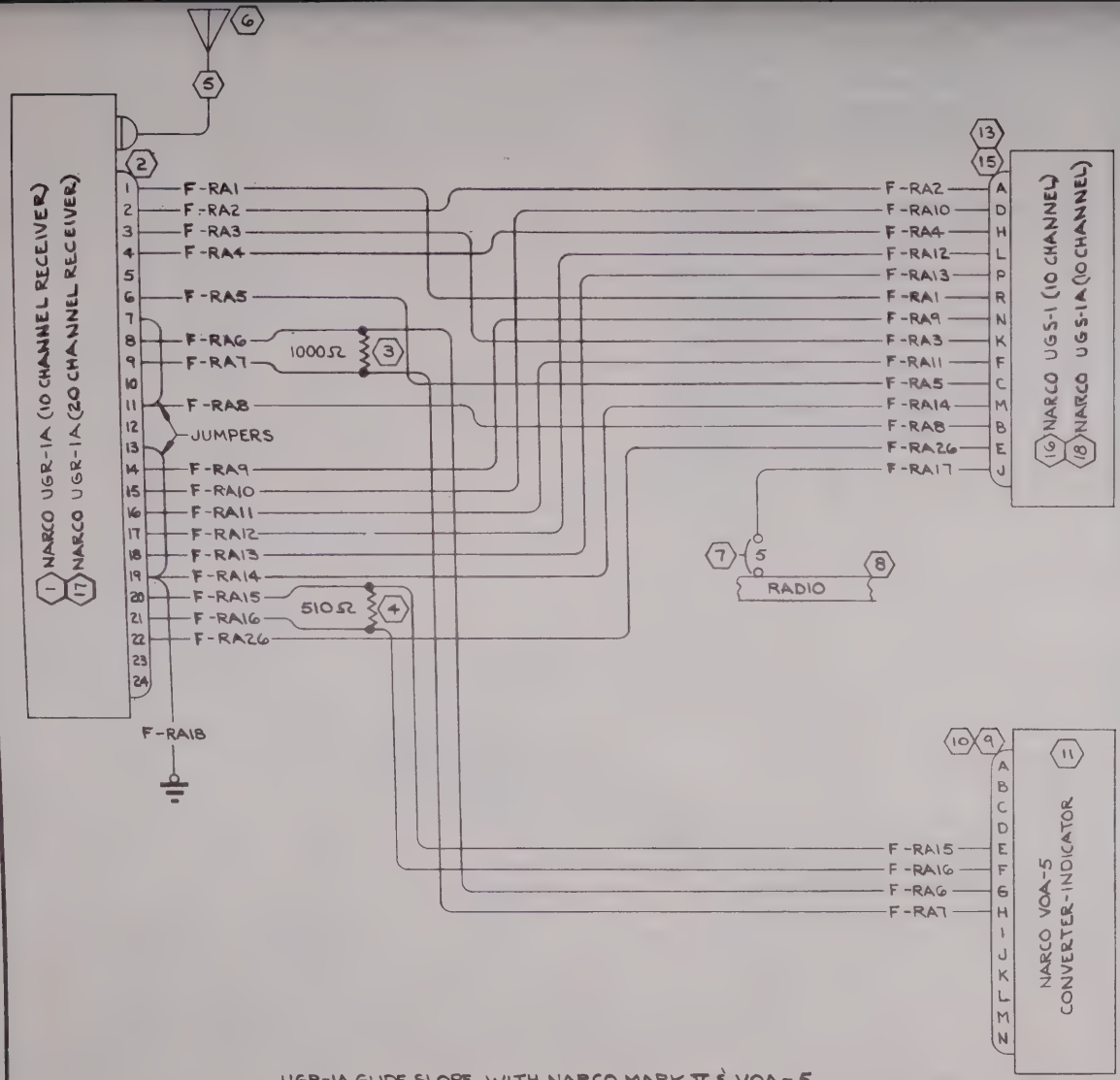


UGR-1A GLIDE SLOPE WITH NARCO MARK V & VOA-5

Inactive
SER 21058221 & ON
6-4-63
Gw HPW RRS
Tm NMC

| WIRE CODE NO. | GA | MATERIAL | LG | TERMINALS | | SERIALS |
|---|---|---|---|---|---|---|

WIRE TABLE

CESSNA AIRCRAFT CO. COMMERCIAL AIRCRAFT DIVISION WICHITA KANSAS

| | NAME | DATE |
|---|---|---|
| DRAWN | RIDDER | 8-27-62 |
| GROUP | C.V. Martin | 9-20-62 |
| CHECK | R. Stuck | 9-20-62 |
| PROJ | N. McCarter | 9-24-62 |

TITLE: WIRING DIAGRAM — NARCO UGR-1A GLIDE SLOPE WITH NARCO MARK V OR MARK X & VOA-5 (OPT)

Cessna.

DWG NO: 1270405

| SUPERSEDED BY | SUPERSEDES | MODEL: | REV: | PAGE: |
|---|---|---|---|---|
| 1270405 PAGE 17.21 | | 210 | | 17.10.1 |

| ITEM NO | PART NO. | DESCRIPTION | INSTALLED ON |
|---|---|---|---|

EQUIPMENT TABLE

FORM NO. 80-161

NOTES:

1. WHEN THE OMNI ANTENNA IS CONNECTED TO 2 NAV RECEIVERS, ADD A DAGE NO. 8002-1 TEE CONNECTOR AT "J102" ON THE R-319 SET & CONNECT THE ANTENNA LEAD-IN TO THIS TEE. CONNECT THE 2ND RECEIVER TO THE TEE CONNECTOR WITH A 27.0 INCH LENGTH OF RG-58A/U CABLE.

| CHG LET | REVISION | BY DATE | CHK APPD |
|---|---|---|---|
| A | TITLE WAS ARC TYPE 319A NAV RECEIVER (OPT) 27 WAS 34.5. | GLW 12-4-63 | RRS |

Inactive SER 2105822 & ON
W.J.R. 6-26-63
RRS in NMC

| | | | | | | | |
|---|---|---|---|---|---|---|---|
| F-RD434 | 18 | | | SOLDER | SOLDER | 1270457 | |
| F-RD433 | 18 | | | | | | |
| F-RD432 | 22 | | | | | | |
| F-RD431 | 22 | | | | | | |
| F-RD430 | 22 | | | | | | |
| F-RD429 | 22 | | | | | | |
| F-RD428 | 22 | | | | | | |
| F-RD427 | 22 | | | | | | |
| F-RD426 | 22 | | | | | | |
| F-RD425 | 22S | | | | | | |
| F-RD424 | 22S | | | | | | |
| F-RD423 | 22S | | | | | | |
| F-RD422 | 22 | | | | | | |
| F-RD421 | 22 | | | | | | |
| F-RD420 | 22 | | | | | | |
| F-RD419 | 22 | | | SOLDER | SOLDER | | |
| F-RD418 | 22S | | | | SOLDER | | |
| F-RD417 | 18 | | | S-1367-1-8 | SOLDER | | |
| F-RD416 | 18 | | | S-341-1 | SOLDER | | |
| F-RD415 | 16 | | | SOLDER | SOLDER | | |
| F-RD414 | 18 | | | | | | |
| F-RD413 | 22 | | | | | | |
| F-RD412 | 22 | | | | | | |
| F-RD411 | 22 | | | | | | |
| F-RD410 | 22 | | | | | | |
| F-RD409 | 22S | | | | | | |
| F-RD408 | 22 | | | | | | |
| F-RD407 | 16 | | | | | | |
| F-RD406 | 22 | | | | | | |
| F-RD405 | 22 | | | | | | |
| F-RD404 | 22 | | | | | | |
| F-RD403 | 22 | | | | | | |
| F-RD402 | 22S | | | SOLDER | SOLDER | | |
| F-RD401 | 20 | | | S-341-2 | SOLDER | 1270457 | |
| WIRE CODE NO. | GA | MATERIAL | LG | TERMINALS | | N/A | SERIALS |

WIRE TABLE

| (ITEM) | PART NO. | DESCRIPTION | INSTALLED ON |
|---|---|---|---|
| 20 | | | |
| 19 | | | |
| 18 | 1270429-1 | BUS BAR | |
| 17 | S-1232-10 | CKT BKR | |
| 16 | 0770033-86 | R F CABLE ASSY | |
| 15 | 0770033-113 | R F CABLE ASSY | |
| 14 | A-13B | ANTENNA (ARC) | |
| 13 | 1270420-9 | ANTENNA-OMNI | |
| 12 | 1270420-7 | ANTENNA-G.S. | |
| 11 | 1270405-RD100 | WIRE | |
| 10 | 0770033-112 | RF CABLE ASSY | |
| 9 | 0770033-94 | RF CABLE ASSY | |
| 8 | 0770033-116 | R F CABLE ASSY | |
| 7 | 27826 | PLUG (ARC) | |
| 6 | 27825 | PLUG (ARC) | |
| 5 | 28822 | PLUG (ARC) | |
| 4 | DY-319A | DYNAVERTER | |
| 3 | B-317A | CONVERTER (ARC) | |
| 2 | IN-319A-1 | INDICATOR (ARC) | |
| 1 | R-319A | RECEIVER (ARC) | |

CESSNA AIRCRAFT CO COMMERCIAL AIRCRAFT DIVISION WICHITA KANSAS

| | NAME | DATE |
|---|---|---|
| DRAWN | H. WISE | 10-10-62 |
| GROUP | | 10-24-62 |
| CHECK | R Stuck | 10-22-62 |
| PROJ | H. McPeak | 10-29-62 |

TITLE: WIRING DIAGRAM — CESSNA NAV-OMNI 500 (OPT) (ARC TYPE 319A)

Cessna.

DWG NO. 1270405

SUPERSEDED BY | SUPERSEDES | MODEL | REV. | PAGE:

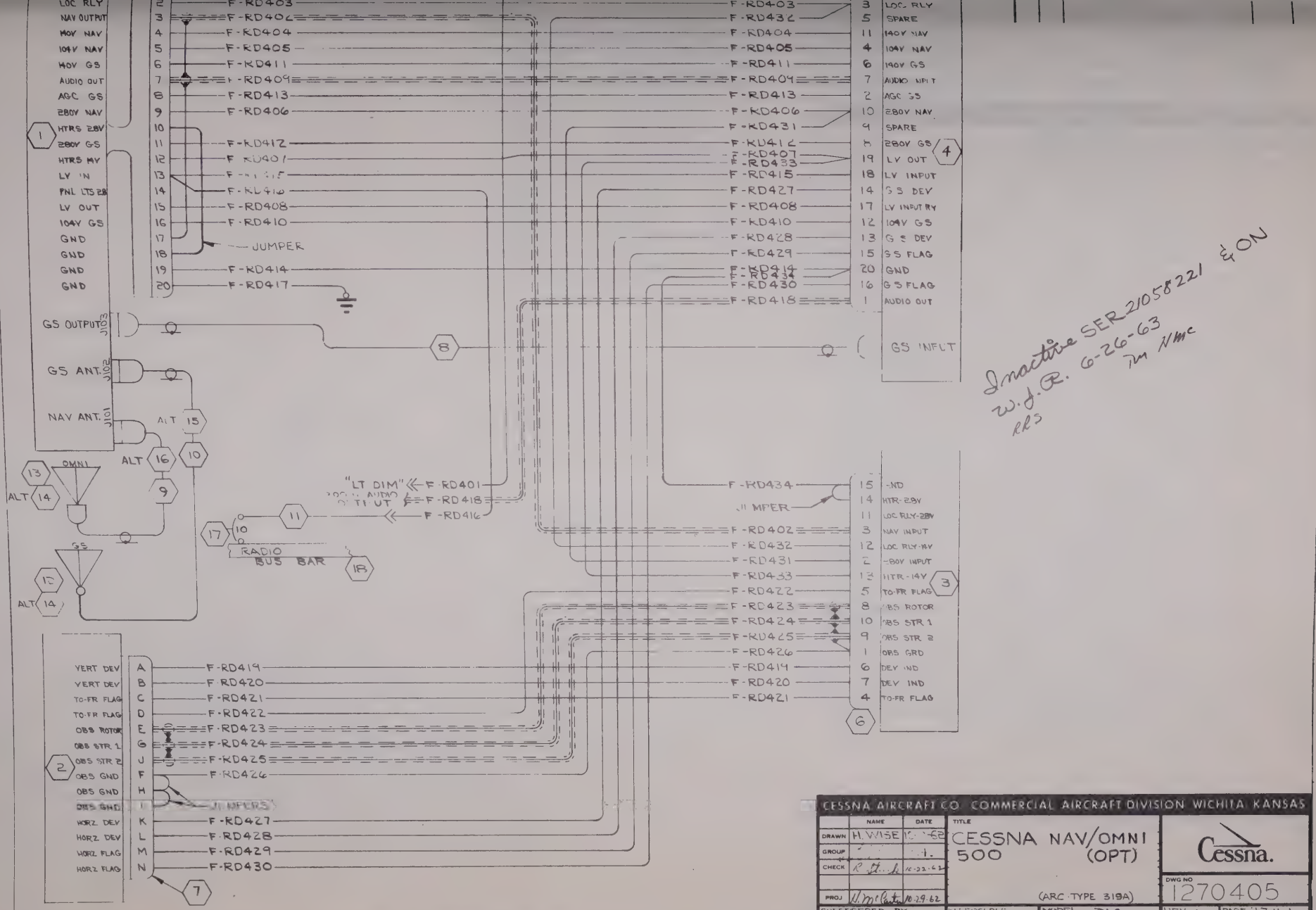


Inactive SER 21058221 & ON
W.J.R. 6-26-63
RLS

| CESSNA AIRCRAFT CO. COMMERCIAL AIRCRAFT DIVISION WICHITA, KANSAS | | | | |
|---|---|---|---|---|
| | NAME | DATE | TITLE | |
| DRAWN | H. WISE | 10-[illegible]-62 | CESSNA NAV/OMNI 500 (OPT) (ARC-TYPE 319A) | Cessna. |
| GROUP | " | " | | |
| CHECK | R. [illegible] | 10-22-62 | | DWG NO 1270405 |
| PROJ | W. McCarty | 10-29-62 | | |
| SUPERSEDED BY 1270405 PAGE 17-11-3 | | | MODEL 210 | REV A / PAGE 17.11.1 |

FORM NO 80-156

(SR4039-9)

| CHG LET | REVISION | BY / DATE | CHK / APPD |
|---|---|---|---|
| | | | |

NOTES:

1. WHEN THE OMNI ANTENNA IS CONNECTED TO 2 NAV RECEIVERS, ADD A DAGE NO. 8002-1 TEE CONNECTOR AT "J102" ON THE R-319 SET & CONNECT THE ANTENNA LEAD-IN TO THIS TEE. CONNECT THE 2ND RECEIVER TO THE TEE CONNECTOR WITH A 27.0 INCH LENGTH OF RG-58 A/U CABLE.
2. WHERE WIRE CODE LISTS 2 COLORS, 1ST COLOR IS BASE COLOR & 2ND COLOR IS THE STRIP.
3. WIRES FLAGGED THUS CONNECT TO 28900 OMNI COUPLER (NAV-O-MATIC 300 SYSTEM) WHEN INSTALLED.

Inactive SER 21058511 & ON
W J R 7-8-64
R.R.S [illegible]

| WIRE CODE NO | GA | MATERIAL | LG | TERMINALS | | N/A | SERIALS |
|---|---|---|---|---|---|---|---|
| GRY/RED | 22 | S-1460-22-8-2 | | S-1370-1 | SOLDER | 1270457 | |
| GRY/GRN | 22 | S-1460-22-8-5 | | S-1370-1 | | | |
| BLK/WHT | 18 | S-1460-18-0-9 | | SOLDER | | | |
| RED/BLK | 18 | S-1460-18-2-0 | | | | | |
| BLU/BLK | 22 | S-1460-22-6-0 | | | | | |
| TAN/BLU | 22 | S-1460-22-10-6 | | | | | |
| BLU/RED | 22 | S-1460-22-6-2 | | | | | |
| TAN/YEL | 22 | S-1460-22-10-4 | | | | | |
| BLU/TAN | 22 | S-1460-22-6-10 | | | | | |
| BLU/YEL | 22 | S-1460-22-6-4 | | | | | |
| BLK/YEL | 22 | S-1460-22-0-4 | | | | | |
| BLU/BLK | 22S | S-1461-22-6-0 | | | | | |
| BLU/RED | 22S | S-1461-22-6-2 | | | | | |
| BLU/WHT | 22S | S-1461-22-6-9 | | | | | |
| WHT/TAN | 22 | S-1460-22-9-10 | | | | | |
| BLU/WHT | 22 | S-1460-22-6-9 | | | | | |
| WHT/RED | 22 | S-1460-22-9-2 | | | | | |
| GRY/BLU | 22 | S-1460-22-8-6 | | SOLDER | | | |
| BLUE | 22 | S-1460-22-6 | | | | | |
| BLK/WHT | 18 | S-1460-18-0-9 | | S-1367-1-8 | | | |
| RED | 16 | S-1460-16-2 | | S-1370-2 | | | |
| RED | 16 | S-1460-16-2 | | SOLDER | | | |
| BLACK | 16 | S-1460-16-0 | | | | | |
| WHT/BLU | 22 | S-1460-22-9-6 | | | | | |
| WHT/BLK | 22 | S-1460-22-9-0 | | | | | |
| WHT/GRN | 22 | S-1460-22-9-5 | | | | | |
| WHT/YEL | 22 | S-1460-22-9-4 | | | | | |
| BLU/TAN | 22S | S-1461-22-6-10 | | | | | |
| RED/GRN | 20 | S-1460-20-2-5 | | | | | |
| RED/WHT | 18 | S-1460-18-2-9 | | | | | |
| BLU/GRN | 22 | S-1460-22-6-5 | | | | | |
| TAN/RED | 22 | S-1460-22-10-2 | | | | | |
| GRY/YEL | 22 | S-1460-22-8-4 | | | | | |
| TAN/WHT | 22 | S-1460-22-10-9 | | | | | |
| BLU/YEL | 22S | S-1461-22-6-4 | | SOLDER | | | |
| YELLOW | 18 | S-1460-18-4 | | S-1370-1 | SOLDER | 1270457 | |

WIRE TABLE

| ITEM | PART NO | DESCRIPTION | INSTALLATION |
|---|---|---|---|
| 17 | 1270461-1 | BUS BAR | |
| 6 | S-1360-10 | CIRCUIT BREAKER | |
| 15 | R-12½-75-RS34 | RHEOSTAT (TRTA) | |
| 14 | YELLOW | WIRE | |
| 13 | 1270420-9 | ANTENNA-OMNI | |
| 12 | 1270420-7 | ANTENNA-G.S. | |
| 11 | RED | WIRE | |
| 10 | 0770033-112 | RF CABLE ASSY | |
| 9 | 0770033-94 | RF CABLE ASSY | |
| 8 | 0770033-116 | RF CABLE ASSY | |
| 7 | 27826 | PLUG (ARC) | |
| 6 | 27825 | PLUG (ARC) | |
| 5 | 28822 | PLUG (ARC) | |
| 4 | 31360-0014 | DYNAVERTER (ARC) | |
| 3 | 24660 | CONVERTER (ARC) | |
| 2 | 27510 | INDICATOR (ARC) | |
| 1 | 28310-1000 | RECEIVER (ARC) | |

CESSNA AIRCRAFT CO., COMMERCIAL AIRCRAFT DIVISION, WICHITA, KANSAS

| | NAME | DATE |
|---|---|---|
| DRAWN | RIDDER | 6-26-63 |
| GROUP | [illegible] | 7-17-63 |
| CHECK | [illegible] | 7-17-63 |
| PROJ | [illegible] | 7-19-63 |

TITLE: WIRING DIAGRAM — CESSNA NAV/OMNI 500 (OPT)

319A

Cessna.

DWG NO 1270405

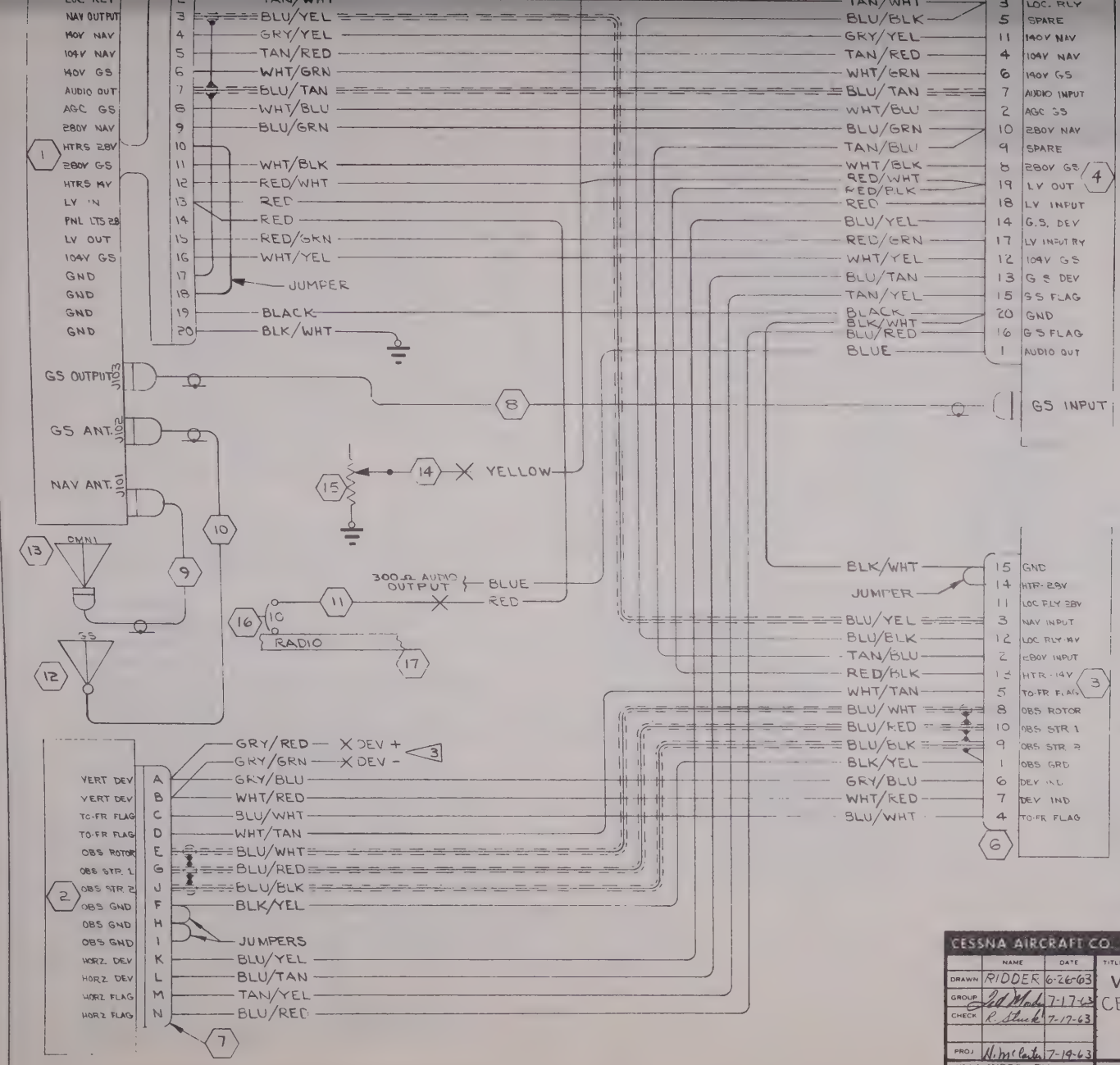


Inactive SER 21058511 & ON
WJR 8-7-64
RRS H&W

CESSNA AIRCRAFT CO. COMMERCIAL AIRCRAFT DIVISION, WICHITA, KANSAS

| | NAME | DATE | TITLE | |
|---|---|---|---|---|
| DRAWN | RIDDER | 6-26-63 | WIRING DIAGRAM — CESSNA NAV/OMNI 500 (OPT) | Cessna. |
| GROUP | Ted Moody | 7-17-63 | | |
| CHECK | R. Stuck | 7-17-63 | | DWG NO 1270405 |
| PROJ | H. McCarter | 7-19-63 | 319A | |
| SUPERSEDED BY 1270475 PG 2.13.1.1 | | | 1270405 PAGE 17.11.1 MODEL 210 | REV PAGE 17.11.3 |

FORM NO 80 156

(SR 3899)

| CHG LET | REVISION | BY DATE | CHK APPD |
|---|---|---|---|
| | | | |

NOTES:

1. REEL ASSY MAY BE EITHER NO. 31-420, GARWIN INC, WICHITA OR SP-10010, STANDARD PRODUCTS INC, WICHITA. NO. 31-402A GARWIN INC IS ALTERNATE.
2. REFER TO 1270625 PAGE 17.9
3. SERIES CAPACITANCE IS REQD ON FREQUENCIES 9.0 MC & ABOVE WHEN A 27 TO 28 FOOT ANT. IS USED. ADD JUMPER WIRE BETWEEN WAFERS FOR LOWER FREQ.
4. 0814308-5 ANTENNA WIRE (120 FEET) REPLACES 0814308-2 (100 FEET) WHEN ANY XMTR-RCVR FREQUENCY TO BE USED IS BELOW 2400 KC.
5. USE ELMENCO TYPE VCM-20, 2500 WVDC, ±5% CAPACITORS FOR SERIES CAPACITANCE BETWEEN WAFERS WHEN REQD (SEE NOTE 3). PARALLEL CONNECT (2) 10 MMFD CAPACITORS FOR FREQ 9.0 MC & HIGHER THEN ADJUST TAP ON LOAD COIL FOR RESONANCE.
6. F-RH64, F-RH60, F-RH74, F-RH75, F-RH62 & F-RH76 WIRES TO BE CODED "PH-UK", "MIKE AUD", "MIKE KEY", "MIKE GND", "SPKR" & "LT DIM" RESPECTIVELY. NUMERICAL CODING SHOWN IS OPTIONAL.
7. WIRES THAT CONNECT TO REEL MOTOR ARE SOLDERED TO PLUG AFTER INSTL IN AIRPLANE.

Inactive SER 21058221 & ON 7-16-63 H.S.W. RRS LE NMP

| ITEM NO. | PART NO. | DESCRIPTION | INSTALLED ON |
|---|---|---|---|
| 46 | 17005 | CONNECTOR | |
| 45 | 17004 | CONNECTOR | |
| 44 | 30D192A1 | CAPACITOR (SPR) | |
| 43 | 1270636-1 | CABLE ASSY | |
| 42 | HIF | FUSEHOLDER (BUS) | |
| 41 | AGA2 | FUSE (BUS) | |
| 40 | 0770033-105 | CABLE ASSY | |
| 4 39 | 0814308-2 | ANTENNA WIRE | |
| 38 | 0770033-101 | CABLE ASSY | |
| 5 37 | TYPE VCM-20 | CAPACITOR | |
| 36 | 0770033-103 | CABLE ASSY | |
| 35 | 0770033-102 | CABLE ASSY | |
| 34 | 0770033-70 | CABLE | |
| 33 | 1270405-RP1 | WIRE | |
| 32 | 1270405-RP7 | WIRE | |
| 31 | 1270405-RP6 | WIRE | |
| 30 | 1270405-RP5 | WIRE | |
| 29 | 1270405-RP4 | WIRE | |
| 2 28 | 1270625-RH9 | WIRE | |
| 27 | 1270625-RH7 | WIRE | |
| 26 | 1270625-RH6 | WIRE | |
| 25 | 1270625-RH4 | WIRE | |
| 24 | 1270625-RH3 | WIRE | |
| 23 | 1270625-RH8 | WIRE | |
| 22 | 1270625-HR1 | WIRE | |
| 21 | 1270625-RH2 | WIRE | |
| 20 | BLUE | WIRE | |
| 2 19 | 1270625-RH5 | WIRE | |
| 18 | 1270405-LG1 | WIRE | |
| 17 | 1270405-LB1 | WIRE | |
| 16 | 1270405-LB2 | WIRE | |
| 15 | 1270429-1 | BUS BAR | |
| 14 | S-1232-15 | CIRCUIT BREAKER | |
| 13 | S-1232-10 | CIRCUIT BREAKER | |
| 12 | 0770033-118 | CABLE ASSY | |
| 11 | 1270420-10 | ANTENNA | |
| 10 | 0411062-9 | SPEAKER | |
| 9 | S-1102-1 | MIKE JACK | |
| 8 | S-1103-1 | PHONE JACK | |
| 7 | 0812509-24 | COIL ASSY | |
| 6 | 1 | REEL ASSY | |
| 5 | 0770630-3 | CONTROL PANEL | |
| 4 | 39001 | ANT. CURRENT SENSE UNIT | (PNTR) |
| 3 | 39002 | ANT. SW ASSY | (PNTR) |
| 2 | DX10-PS | POWER SUPPLY | (PNTR) |
| 1 | DX10-D | PAN. TRANSCEIVER | (PNTR) |

EQUIPMENT TABLE

| WIRE CODE NO. | GA | MATERIAL | LG | TERMINALS | | N/A | SERIALS |
|---|---|---|---|---|---|---|---|
| F-RH81 | 20 | | | S-1370-0 | S-1370-0 | 1270455 | |
| F-RH80 | 20 | | | S-1370-0 | S-1370-0 | ↕ | |
| F-RH79 | 14 | | | SOLDER | S-1367-2-8 | | |
| F-RH78 | 14 | | | SOLDER | S-1367-2-8 | 1270455 | |
| | | | | | | | |
| F-RH76 | 20 | | | SOLDER | S-1370-0 | 1270455 | |
| F-RH75 | 20 | | | SOLDER | S-1370-0 | 1270455 | |
| F-RH74 | 20 | | | SOLDER | S-1370-0 | 1270455 | |
| F-RH73 | 20 | | | SOLDER | CONN TO F-RH54 | 1270454 | |
| F-RH72 | 20 | | | SOLDER | CONN TO F-RH57 | ↕ | |
| F-RH71 | 20 | | | SOLDER | CONN TO F-RH55 | | |
| F-RH70 | 20 | | | SOLDER | CONN TO F-RH53 | | |
| F-RH69 | 20 | | | SOLDER | CONN TO F-RH52 | ↕ | |
| F-RH68 | 20 | | | SOLDER | CONN TO F-RH51 | 1270454 | |
| F-RH67 | 18 | | | SOLDER | SOLDER | 1270455 | |
| F-RH66 | 18 | | | SOLDER | S-1367-1-8 | ↕ | |
| F-RH65 | 20 | | | SOLDER | SOLDER | | |
| F-RH64 | 20 | | | SOLDER | S-1370-0 | | |
| F-RH63 | 20 | | | SOLDER | SOLDER | | |
| F-RH62 | 20 | | | SOLDER | S-1370-0 | | |
| F-RH61 | 20 | | | SOLDER | SOLDER | | |
| F-RH60 | 20 | | | SOLDER | S-1370-0 | | |
| F-RH59 | 20 | | | SOLDER | SOLDER | | |
| F-RH58 | 20 | | | SOLDER | SOLDER | | |
| F-RH57 | 20 | | | SOLDER | S-1370-0 | | |
| F-RH56 | 20 | | | SOLDER | SOLDER | | |
| F-RH55 | 20 | | | SOLDER | S-1370-0 | | |
| F-RH54 | 20 | | | SOLDER | S-1370-0 | | |
| F-RH53 | 20 | | | SOLDER | S-1370-0 | | |
| F-RH52 | 20 | | | SOLDER | S-1370-0 | ↕ | |
| F-RH51 | 20 | | | SOLDER | S-1370-0 | 1270455 | |

WIRE TABLE

| | NAME | DATE |
|---|---|---|
| DRAWN | G WOOD | 9-19-62 |
| GROUP | HEW | 11-7-62 |
| CHECK | R. Stuck | 11-6-62 |
| PROJ | H. McCarter | 11-7-62 |

TITLE: WIRING DIAGRAM — PANTRONICS DX10-D HF TRANSCEIVER INSTALLATION (OPT)

Cessna. WICHITA

DWG NO. 1270405

SUPERSEDED BY | SUPERSEDES | MODEL | REV | PAGE:

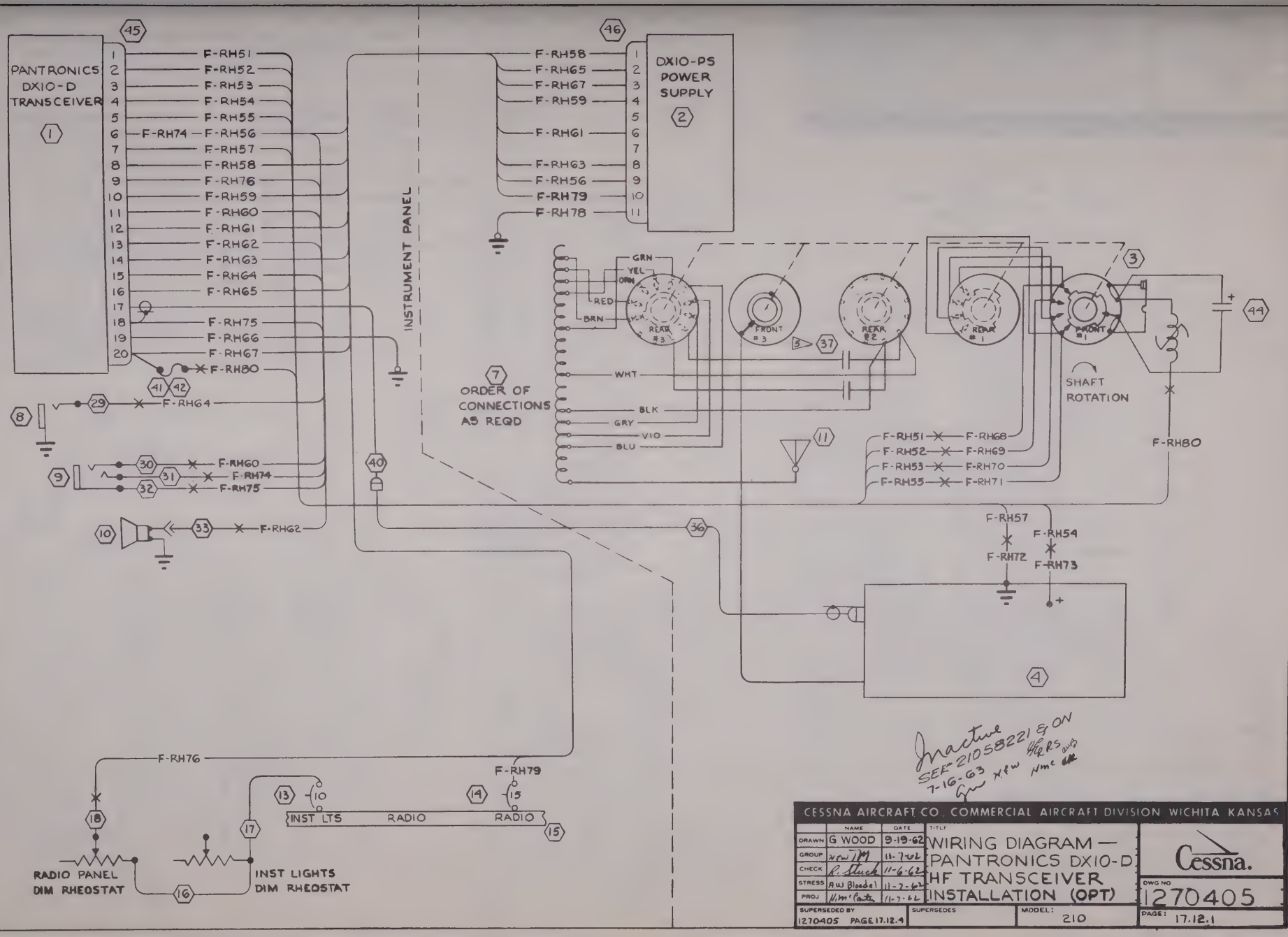


Inactive SER 21058221 & ON 7-16-63

| CESSNA AIRCRAFT CO. COMMERCIAL AIRCRAFT DIVISION WICHITA KANSAS | | | | |
|---|---|---|---|---|
| | NAME | DATE | TITLE | |
| DRAWN | G WOOD | 9-19-62 | WIRING DIAGRAM — PANTRONICS DX10-D HF TRANSCEIVER INSTALLATION (OPT) | Cessna. |
| GROUP | | 11-7-62 | | |
| CHECK | | 11-6-62 | | DWG NO 1270405 |
| STRESS | | 11-7-62 | | |
| PROJ | | 11-7-62 | | |
| SUPERSEDED BY 1270405 PAGE 17.12.4 | SUPERSEDES | MODEL: 210 | | PAGE: 17.12.1 |

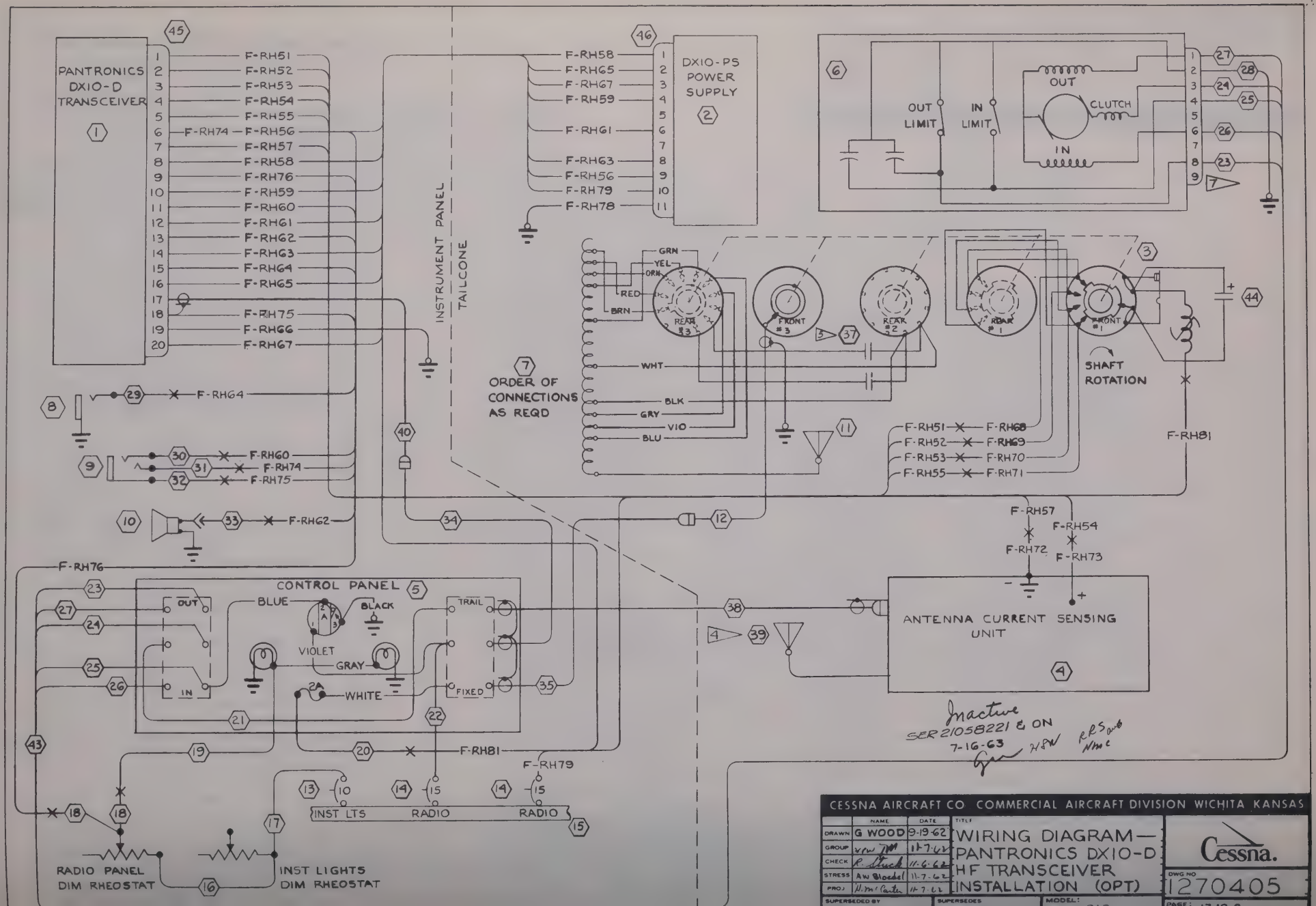


| CESSNA AIRCRAFT CO COMMERCIAL AIRCRAFT DIVISION WICHITA KANSAS | | | | |
|---|---|---|---|---|
| | NAME | DATE | TITLE | |
| DRAWN | G WOOD | 9-19-62 | WIRING DIAGRAM— PANTRONICS DX10-D HF TRANSCEIVER INSTALLATION (OPT) | Cessna. |
| GROUP | | 11-7-62 | | |
| CHECK | | 11-6-62 | | DWG NO 1270405 |
| STRESS | | 11-7-62 | | |
| PROJ | | 11-7-62 | | |
| SUPERSEDED BY | | SUPERSEDES | MODEL: | PAGE |

NOTES:

1. REEL ASSY MAY BE EITHER NO. 31-420, GARWIN INC, WICHITA OR SP-10010, STANDARD PRODUCTS INC, WICHITA. NO. 31-402A GARWIN INC IS ALTERNATE.
2. REFER TO 1270625 PAGE 17.9, 1270405 PAGE 17.1 & 11.2.
3. SERIES CAPACITANCE IS REQD ON FREQUENCIES 8.0 MC & ABOVE WHEN A 27 TO 28 FOOT ANT. IS USED. ADD JUMPER WIRE BETWEEN WAFERS FOR LOWER FREQUENCIES.
4. 0814308-5 ANTENNA WIRE (120 FEET) REPLACES 0814308-2 (100 FEET) WHEN ANY XMTR-RCVR FREQUENCY TO BE USED IS BELOW 2400 KC.
5. USE ELMENCO TYPE VCM-20, 2500 WVDC, ±5% CAPACITORS FOR SERIES CAPACITANCE BETWEEN WAFERS WHEN REQD (SEE NOTE 3). PARALLEL CONNECT (2) 10 MMFD CAPACITORS FOR FREQ 8.0 MC & HIGHER THEN ADJUST TAP ON LOAD COIL FOR RESONANCE.
6. WIRES THAT CONNECT TO REEL MOTOR ARE SOLDERED TO PLUG AFTER INSTL IN AIRPLANE.

(SR 4039- )

| CHG LET | REVISION | BY DATE | CHK APPD |
|---|---|---|---|

| ITEM NO | PART NO | DESCRIPTION | INSTALLED ON |
|---|---|---|---|
| 46 | 17005 | CONNECTOR | (PNTR) |
| 45 | 17004 | CONNECTOR | (PNTR) |
| 44 | 30D192A1 | CAPACITOR (SPR) | |
| 43 | 1270636-1 | CABLE ASSY | |
| 42 | HIF | FUSEHOLDER (BUS) | |
| 41 | AGA2 | FUSE (BUS) | |
| 40 | 0770033-105 | CABLE ASSY | |
| 39 | 0814308-2 | ANTENNA WIRE | |
| 38 | 0770033-55 | CABLE ASSY | |
| 37 | TYPE VCM-20 | CAPACITOR | |
| 36 | 0770033-103 | CABLE ASSY | |
| 35 | 0770033-102 | CABLE ASSY | |
| 34 | 0770033-70 | CABLE ASSY | |
| 33 | GREEN | WIRE | |
| 32 | BLACK | WIRE | |
| 31 | WHITE/BLK | WIRE | |
| 30 | TAN | WIRE | |
| 29 | BLUE | WIRE | |
| 28 | 1270625-RH9 | WIRE | |
| 27 | 1270625-RH7 | WIRE | |
| 26 | 1270625-RH6 | WIRE | |
| 25 | 1270625-RH4 | WIRE | |
| 24 | 1270625-RH3 | WIRE | |
| 23 | 1270625-RH8 | WIRE | |
| 22 | 1270625-RH1 | WIRE | |
| 21 | 1270625-RH2 | WIRE | |
| 20 | BLUE | WIRE (BDN) | |
| 19 | 1270625-RH5 | WIRE | |
| 18 | YELLOW | WIRE | |
| 17 | 1270405-LB1 | WIRE | |
| 16 | YELLOW | WIRE | |
| 15 | 1270461-1 | BUS BAR | |
| 14 | S-1360-15 | CIRCUIT BREAKER | |
| 13 | S-1360-10 | CIRCUIT BREAKER | |
| 12 | 0770033-118 | CABLE ASSY | |
| 11 | 1270420-10 | ANTENNA | |
| 10 | 0911062-9 | SPEAKER | |
| 9 | S-1102-1 | MIKE JACK | |
| 8 | S-1103-1 | PHONE JACK | |
| 7 | 0812509-24 | COIL ASSY | |
| 6 | 1 | REEL ASSY | |
| 5 | 0770630-3 | CONTROL PANEL | |
| 4 | 39001 | ANT. CURRENT SENSE UNIT | (PNTR) |
| 3 | 39002 | ANTENNA SW ASSY | (PNTR) |
| 2 | DX10-P5 | POWER SUPPLY | (PNTR) |
| 1 | DX10-D | PAN. TRANSCEIVER | (PNTR) |

EQUIPMENT TABLE

| WIRE CODE NO. | GA | MATERIAL | LG | TERMINALS | | N/A | SERIALS |
|---|---|---|---|---|---|---|---|
| BLU/WHT | 22 | S-1460-22-69 | | S-1370-0 | S-1370-0 | 1270455 | |
| BLU/TAN | 22 | S-1460-22-610 | | S-1370-0 | S-1370-0 | | |
| WHITE | 14 | | | SOLDER | S-1367-2-6 | | |
| WHITE | 14 | | | SOLDER | S-1367-2-8 | | |
| YELLOW | 18 | S-1460-18-4 | | SOLDER | S-1370-1 | | |
| BLACK | 22 | S-1460-22-0 | | SOLDER | S-1370-0 | | |
| WHT/BLK | 22 | S-1460-229-0 | | SOLDER | S-1370-0 | 1270455 | |
| YEL/RED | 20 | S-1460-20-4-2 | | SOLDER | MATES WITH YEL/RED WIRE | 1270454 | |
| YEL/TAN | 20 | S-1460-20-4-10 | | SOLDER | MATES WITH YEL/TAN WIRE | | |
| GRN/WHT | 20 | S-1460-20-5-9 | | SOLDER | MATES WITH GRN/WHT WIRE | | |
| GRN/BLU | 20 | S-1460-20-5-6 | | SOLDER | MATES WITH GRN/BLU WIRE | | |
| GRN/YEL | 20 | S-1460-20-5-4 | | SOLDER | MATES WITH GRN/YEL WIRE | | |
| GRN/RED | 20 | S-1460 20-5-2 | | SOLDER | MATES WITH GRN/RED WIRE | 1270454 | |
| YEL/BLK | 18 | S-1460-18-4-0 | | SOLDER | SOLDER | 1270455 | |
| BLK/WHT | 18 | S-1460-18-0-9 | | SOLDER | S-1367-1-8 | | |
| YEL/TAN | 20 | S-1460-20-4-10 | | SOLDER | SOLDER | | |
| BLUE | 22 | S-1460-22-6 | | SOLDER | S-1370-0 | | |
| GRN/WHT | 20 | S-1460-20-5-9 | | SOLDER | SOLDER | | |
| GREEN | 20 | S-1460-20-5 | | SOLDER | S-1370-0 | | |
| GRN/BLU | 20 | S-1460-20-5-6 | | SOLDER | SOLDER | | |
| TAN | 22 | S-1460-22-10 | | SOLDER | S-1370-0 | | |
| GRN/YEL | 20 | S-1460-20-5-4 | | SOLDER | SOLDER | | |
| GRN/RED | 20 | S-1460-20-5-2 | | SOLDER | SOLDER | | |
| YEL/RED | 20 | S-1460-20-4-2 | | SOLDER | S-1370-0 | | |
| YEL/GRN | 20 | S-1460-20-4-5 | | SOLDER | SOLDER | | |
| YEL/TAN | 20 | S-1460-20-4-10 | | SOLDER | S-1370-0 | | |
| GRN/WHT | 20 | S-1460-20-5-9 | | SOLDER | S-1370-0 | | |
| GRN/BLU | 20 | S-1460-20-5-6 | | SOLDER | S-1370-0 | | |
| GRN/YEL | 20 | S-1460-20-5-4 | | SOLDER | S-1370-0 | | |
| GRN/RED | 20 | S-1460-20-5-2 | | SOLDER | S-1370-0 | 1270455 | |

WIRE TABLE

CESSNA AIRCRAFT CO. COMMERCIAL AIRCRAFT DIVISION WICHITA KANSAS

| | NAME | DATE |
|---|---|---|
| DRAWN | G WOOD | 7-16-63 |
| GROUP | W&W | |
| CHECK | R. Stuck | 8-8-63 |
| PROJ | N. McCarter | 8-9-63 |

TITLE: WIRING DIAGRAM — PANTRONICS DX10-D HF TRANSCEIVER INSTALLATION (OPT)

Cessna.

DWG NO: 1270405

| SUPERSEDED BY | SUPERSEDES | MODEL | REV: | PAGE |
|---|---|---|---|---|
| | 1270405 PAGE 17.12 | 210 | | 17.12.3 |

FORM NO. 80-161

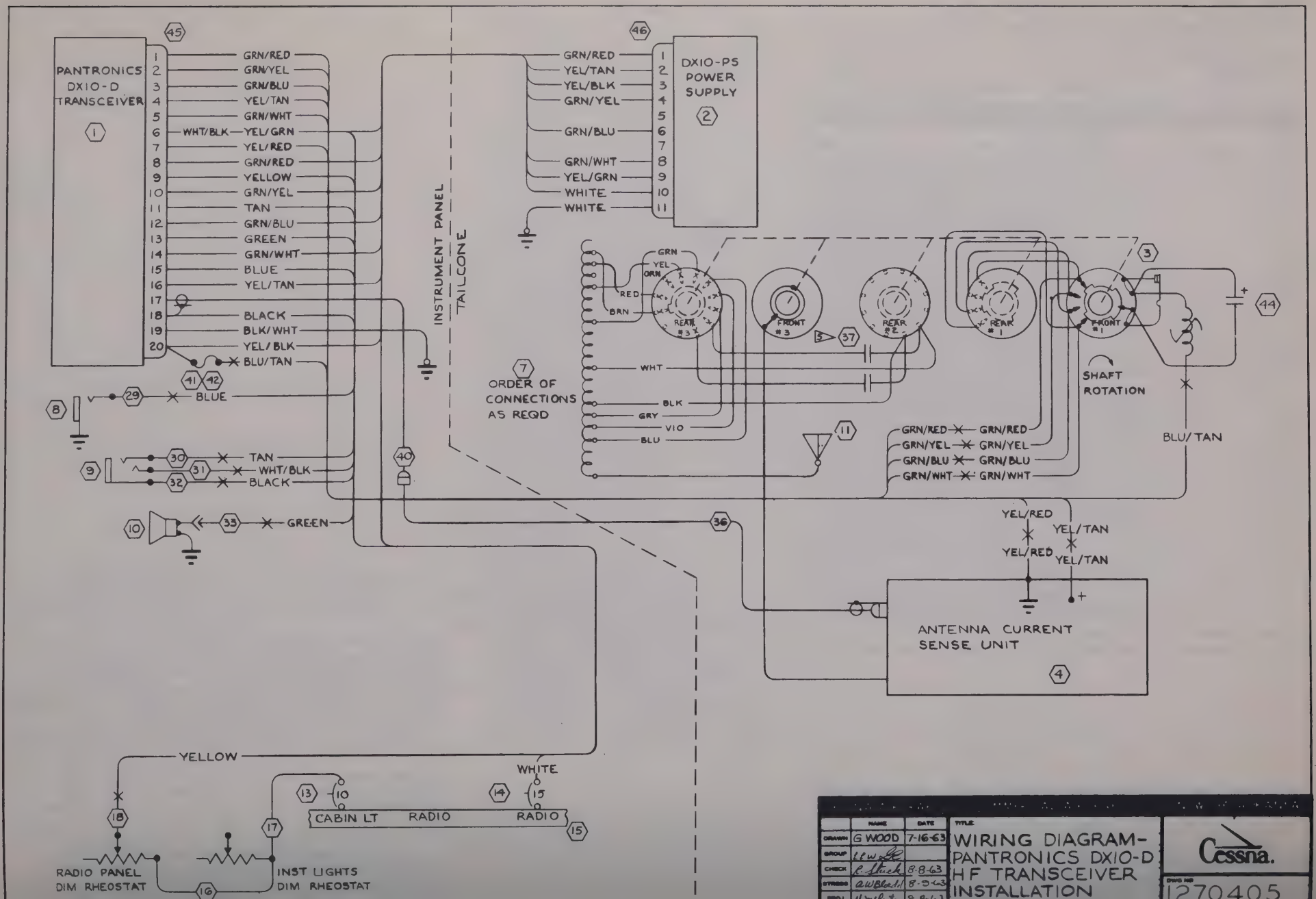


| | NAME | DATE |
|---|---|---|
| DRAWN | G WOOD | 7-16-63 |
| GROUP | | |
| CHECK | | 8-8-63 |
| STRESS | | 8-9-63 |
| ENGR | | 8-9-63 |

TITLE: WIRING DIAGRAM-PANTRONICS DX10-D HF TRANSCEIVER INSTALLATION

Cessna.

DWG NO 1270405

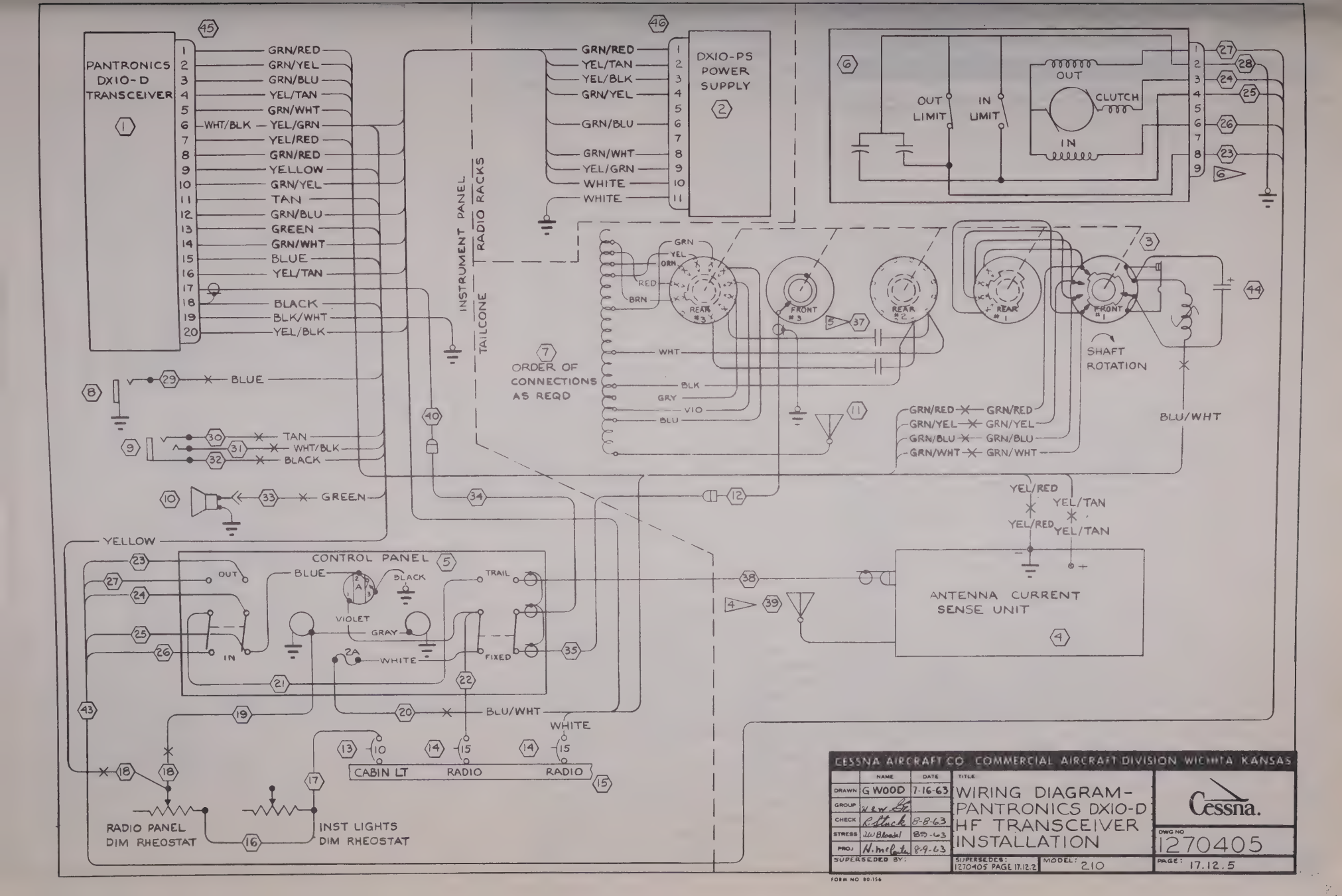


| CESSNA AIRCRAFT CO COMMERCIAL AIRCRAFT DIVISION WICHITA KANSAS | | | | |
|---|---|---|---|---|
| | NAME | DATE | TITLE | |
| DRAWN | G WOOD | 7-16-63 | WIRING DIAGRAM - PANTRONICS DX10-D HF TRANSCEIVER INSTALLATION | Cessna. |
| GROUP | | | | |
| CHECK | R Stuck | 8-8-63 | | |
| STRESS | W Bloedel | 8-9-63 | | DWG NO 1270405 |
| PROJ | N. Mefford | 8-9-63 | | |
| SUPERSEDED BY: | | | SUPERSEDES: 1270405 PAGE 17.12.2 / MODEL: 210 | PAGE: 17.12.5 |

FORM NO 80-156

| CHG LET | REVISION | BY DATE | CHK APPD |
|---|---|---|---|
| | | | |

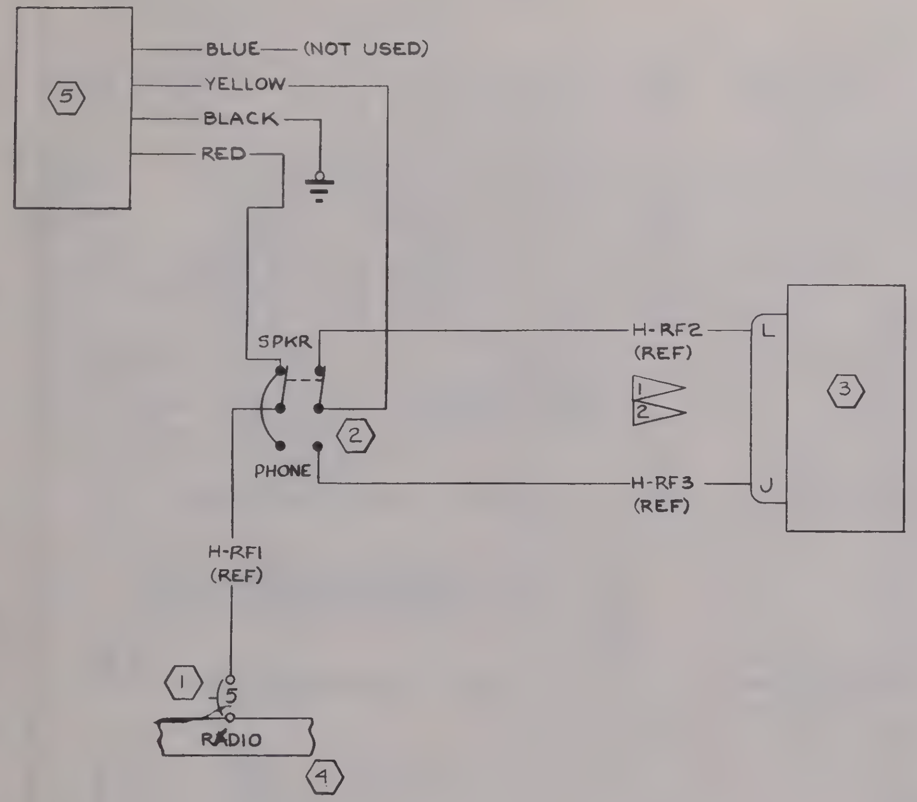


NOTE:

1. WIRE H-RF2 MAY BE CONNECTED TO ANY AUDIO ISOLATION AMPLIFIER WITH A 500 OHM INPUT. WHEN (3) IS NOT USED, WIRE H-RF3 MAY BE CONNECTED DIRECT TO THE PHONE JACK CIRCUIT.
2. WIRES WITH "H" PREFIX SHOWN ON THIS PAGE ARE DERIVED FROM 1270625, PAGE 17.5. THESE WIRES ARE PART OF 0770605 SERIES OPTIONAL MKR BCN RECEIVER INSTL.

| | | | |
|---|---|---|---|
| 5 | MBT-12 | MKR BCN RCVR(NARCO) | |
| 4 | 1270429-1 | BUS BAR | |
| 3 | 0770631-2 | ISOLATION AMP | |
| 2 | 8867K1 | SWITCH (CUT) | |

| WIRE CODE NO. | GA | MATERIAL | LG | TERMINALS | | SERIALS |
|---|---|---|---|---|---|---|
| | | | | | | |

WIRE TABLE

CESSNA AIRCRAFT CO. COMMERCIAL AIRCRAFT DIVISION WICHITA KANSAS

| | NAME | DATE |
|---|---|---|
| DRAWN | G WOOD | 12-7-62 |
| GROUP | [illegible] | 12-19-62 |
| CHECK | [illegible] | [illegible] |

TITLE: WIRING DIAGRAM — MARKER BEACON

Cessna.

| CHG LET | REVISION | BY DATE | CHK APPD |
|---|---|---|---|
| | | | |

NOTES:

1. WIRES F-RD7, 12, 13, 14, 15, & 16 TO BE CODED "LT DIM", "MIKE AUD", "MIKE GND", "MIKE KEY", "SPKR" & "PH-JK" RESPECTIVELY. NUMERICAL CODING PER CES 1100 IS OPTIONAL ON THESE WIRES.
2. "SPKR" CIRCUIT IS CONNECTED TO 5Ω LOAD WHEN AN EXTERNAL AMPLIFIER IS USED.

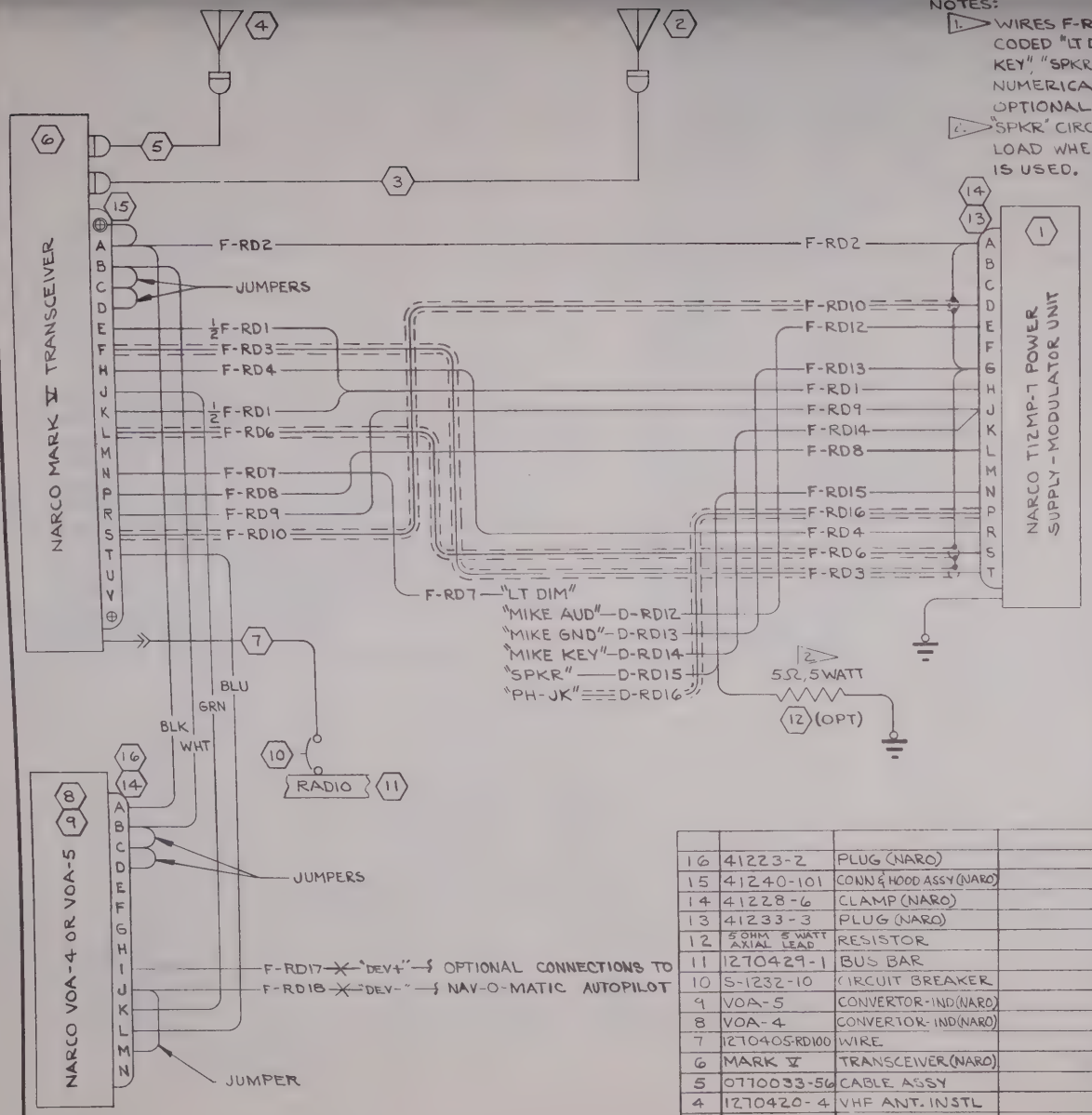


Inactive
SER 21058221 & ON
4-6-63
Gw H.R.W. RRS
JM NMC

| ITEM NO | PART NO. | DESCRIPTION | INSTALLED ON |
|---|---|---|---|
| 16 | 41223-2 | PLUG (NARO) | |
| 15 | 41240-101 | CONN & HOOD ASSY (NARO) | |
| 14 | 41228-6 | CLAMP (NARO) | |
| 13 | 41233-3 | PLUG (NARO) | |
| 12 | 5 OHM 5 WATT AXIAL LEAD | RESISTOR | |
| 11 | 1270429-1 | BUS BAR | |
| 10 | S-1232-10 | CIRCUIT BREAKER | |
| 9 | VOA-5 | CONVERTOR-IND (NARO) | |
| 8 | VOA-4 | CONVERTOR-IND (NARO) | |
| 7 | 1270405-RD100 | WIRE | |
| 6 | MARK V | TRANSCEIVER (NARO) | |
| 5 | 0770033-56 | CABLE ASSY | |
| 4 | 1270420-4 | VHF ANT. INSTL | |
| 3 | 0770033-60 | CABLE ASSY | |
| 2 | 1270420-9 | OMNI ANT. INSTL | |
| 1 | 0770034-4 | MOD-PWR UNIT | |

EQUIPMENT TABLE

| WIRE CODE NO. | GA | MATERIAL | LG | TERMINALS | | | SERIALS |
|---|---|---|---|---|---|---|---|
| F-RD11 | | OMITTED | | | | | |
| F-RD5 | | OMITTED | | | | | |
| F-RD18 | 22 | | | SOLDER | S-1370-0 | 1270459 | |
| F-RD17 | 22 | | | SOLDER | S-1370-0 | 1270459 | |
| BLUE | 22 | BELDEN 8524 | | SOLDER | SOLDER | 1270459 | |
| GREEN | 22 | | | SOLDER | SOLDER | | |
| WHITE | 22 | | | SOLDER | SOLDER | | |
| BLACK | 22 | BELDEN 8524 | | SOLDER | SOLDER | | |
| F-RD16 | 22S | | | SOLDER | 1 | | |
| F-RD15 | 20 | | | SOLDER | 1 | | |
| F-RD14 | 22 | | | SOLDER | 1 | | |
| F-RD13 | 22 | | | SOLDER | 1 | | |
| F-RD12 | 22 | | | SOLDER | 1 | | |
| F-RD10 | 22S | | | SOLDER | SOLDER | | |
| F-RD9 | 22 | | | SOLDER | SOLDER | | |
| F-RD8 | 22 | | | SOLDER | SOLDER | | |
| F-RD7 | 20 | | | SOLDER | 1 | | |
| F-RD6 | 22S | | | SOLDER | SOLDER | | |
| F-RD4 | 22 | | | SOLDER | SOLDER | | |
| F-RD3 | 22S | | | SOLDER | SOLDER | | |
| F-RD2 | 20 | | | SOLDER | SOLDER | | |
| F-RD1 | 16 | | | SOLDER | SOLDER | 1270459 | |

WIRE TABLE

CESSNA AIRCRAFT CO. COMMERCIAL AIRCRAFT DIVISION, WICHITA, KANSAS

| | NAME | DATE |
|---|---|---|
| DRAWN | RIDDER | 12-20-62 |
| GROUP | [illegible] | 1-3-63 |
| CHECK | [illegible] | 1-4-63 |
| PROJ | [illegible] | 1-10-63 |

TITLE: WIRING DIAGRAM — NARCO MARK V WITH VOA-4 OR VOA-5 (OPT)

Cessna.

DWG NO. 1270405

SUPERSEDED BY | SUPERSEDES | MODEL: 210 | REV: | PAGE: 17.14

FORM NO. 80-161

| CHG LET | REVISION | BY / DATE | CHK / APPD |
|---|---|---|---|
| | | | |

NOTES:

1. CIRCUITS SHOWN TRAIL ANTENNA "IN", CHANNEL ONE SELECTED.
2. CUT RF CABLE ON TUNER DUST COVER TO LENGTH REQD BY INSTL AND TERMINATE WITH UG-88C/U CONNECTOR. THIS CONNECTOR MATES WITH UG-89/U CONNECTOR ON CONTROL PANEL.
3. WIRE LENGTHS TO BE DETERMINED ON 0770629
4. "D" PREFIX USED ON THIS DRAWING INSTEAD OF "F" BECAUSE CABLE ASSYS ARE SAME AS THOSE IN MODEL 182. THIS DIAGRAM IS IDENTICAL TO 0770610 PAGE 17.15. THIS WIRING DIAGRAM IS FOR REFERENCE ONLY. COMPLETE WIRE NUMBERS ARE 0770610-XXX.

| | | | |
|---|---|---|---|
| 32 | 1270405-RP5 | WIRE | |
| 31 | 1270405-RP6 | WIRE | |
| 30 | 1270405-RP7 | WIRE | |
| 29 | MS3057-10B | CLAMP | |
| 28 | PL-112 | CONNECTOR | |
| 27 | | | |
| 26 | | | |
| 25 | 26-4200-16S | CONNECTOR (AMBE) | |
| 24 | 0770033-89 | CABLE ASSY | |
| 23 | 0770033-70 | CABLE ASSY | |
| 22 | 0770033-71 | CABLE ASSY | |
| 21 | S-1232-15 | CIRCUIT BREAKER | |
| 20 | S-1232-10 | CIRCUIT BREAKER | |
| 19 | 1270429-1 | BUS BAR | |
| 18 | 1270405-LB1 | WIRE | |
| 17 | 1270405-LB2 | WIRE | |
| 16 | 1270405-LG1 | WIRE | |
| 15 | S-1103-1 | PHONE JACK | |
| 14 | 1270405-RP4 | WIRE | |
| 13 | S-1102-1 | MIKE JACK | |
| 12 | 1270405-RP1 | WIRE | |
| 11 | 0411062-9 | SPEAKER | |
| 10 | 1270420-5 | SUNAIR ANTENNA | |
| 9 | 0770033-55 | CABLE ASSY | |
| 8 | 0770033-39 | CABLE ASSY | |
| 7 | 0814308-2 | ANTENNA WIRE | |
| 6 | 0770630-1 | CONTROL PANEL | |
| 5 | 0812509-24 | COIL ASSY | |
| 4 | 0812800-56 | RF INVERTER | |
| 3 | 1270418-1 | REEL ASSY | |
| 2 | 0770627-2 | MOTOR ASSY | |

| | | | | | | | |
|---|---|---|---|---|---|---|---|
| D-RH15 | | 8899 (BDN) | | 235-860 CLIP (JON) | SOLDER | 0770627 | |
| D-RH14 | | | | | | | |
| D-RH13 | | | | | | | |
| D-RH12 | | | | | | | |
| D-RH11 | | | | | | | |
| D-RH10 | | 8899 (BDN) | | 235-860 CLIP (JON) | | 0770627 | |
| D-RH9 | 14 | | | S-1367-2-6 | | 0770629 | |
| D-RH8 | 14 | | | S-1367-2-6 | | | |
| D-RH7 | 14 | | | S-1367-2-6 | | | |
| D-RH6 | 14 | | | S-1367-2-6 | | | |
| D-RH5 | 20 | | | S-341-2 | | | |
| D-RH4 | 14 | | | S-1367-2-6 | | | |
| D-RH3 | 14 | | | S-1367-2-6 | SOLDER | 0770629 | |
| D-RH2 | 14 | | | S-1367-2-6 | S-1367-2-6 | 0770630 | |
| D-RH1 | 14 | | | S-1367-2-8 | S-1367-2-6 | 0770630 | |
| BLUE | 20 | 8523 (BDN) | 3 | SOLDER | S-1370-0 | 0770629 | |
| GRAY | 20 | | | | | | |
| YELLOW | 20 | | | | | | |
| ORANGE | 20 | | | | | | |
| RED | 20 | | | | | | |
| VIOLET | 20 | 8523 (BDN) | 3 | SOLDER | S-1370-0 | 0770629 | |
| WIRE CODE NO. | GA | MATERIAL | LG | TERMINALS | | N/A | SERIALS |

WIRE TABLE

CESSNA AIRCRAFT CO. COMMERCIAL AIRCRAFT DIVISION WICHITA KANSAS

| | NAME | DATE |
|---|---|---|
| DRAWN | G WOOD | 1-14-63 |
| GROUP | [illegible] | 2-22-63 |

TITLE: WIRING DIAGRAM — SUNAIR T-5-DA

Cessna.

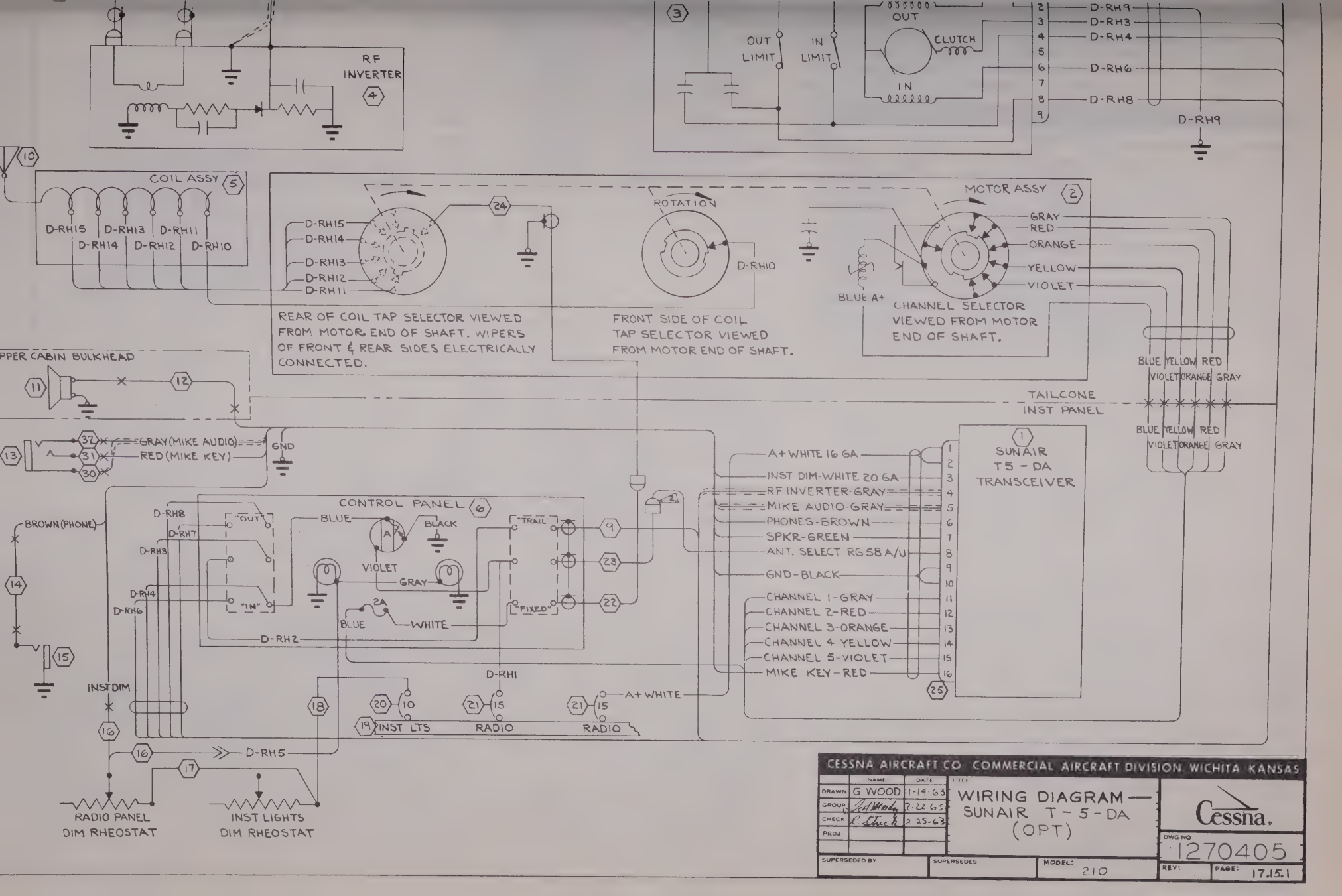


CESSNA AIRCRAFT CO COMMERCIAL AIRCRAFT DIVISION WICHITA KANSAS

| | NAME | DATE |
|---|---|---|
| DRAWN | G WOOD | 1-14-63 |
| GROUP | | 2-22-65 |
| CHECK | | 2-25-63 |
| PROJ | | |

TITLE: WIRING DIAGRAM — SUNAIR T-5-DA (OPT)

Cessna.

DWG NO 1270405

| SUPERSEDED BY | SUPERSEDES | MODEL: | REV: | PAGE: |
|---|---|---|---|---|
| | | 210 | | 17.15.1 |

(SR 4099)

| CHG LET | REVISION | BY / DATE | CHK / APPD |
|---|---|---|---|
| A | PIN 13 ON XMTR WAS PHONE - ADF; PIN 14 ON XMTR WAS AUDIO - ADF (SR 4099) | WJR 3-13-63 | |

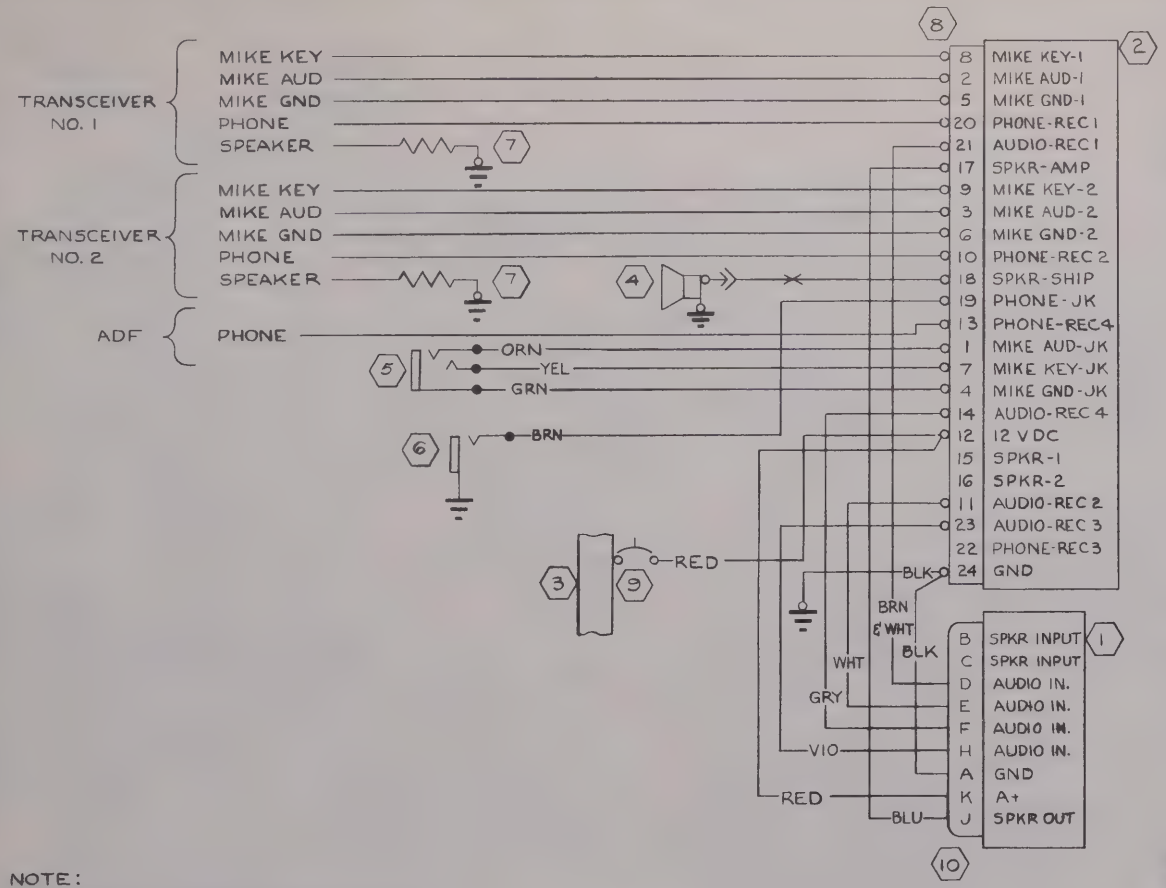


NOTE:

1. BLACK WIRES REQUIRE S-1367-1-6 TERMINALS ON SELECTOR SWITCH END, & S-1367-1-8 TERMINAL ON GND END.
2. RED WIRES REQUIRE S-1367-1-6 TERMINALS ON SELECTOR SWITCH END, & S-1367-1-8 TERMINAL ON CIRCUIT BREAKER END.
3. CONNECT TO RADIO CIRCUIT BREAKER, PREFERABLY THE 5 AMP BREAKER USED ON THE ADF INSTL.

| ITEM NO. | PART NO. | DESCRIPTION | INSTALLED ON |
|---|---|---|---|
| 10 | 126-222 | CONNECTOR (AMBE) | |
| 9 | 3 | CIRCUIT BREAKER | |
| 8 | 601-2104-12 | TERMINAL BLOCK | (KKE) |
| 7 | 50HM 5 WATT AXIAL LEAD | RESISTOR (OM) | |
| 6 | S-1103-1 | PHONE JACK | |
| 5 | S-1102-1 | MIKE JACK | |
| 4 | 0911062-9 | SPEAKER ASSY | |
| 3 | 1270429-1 | BUS BAR | |
| 2 | 1270616-1 | XMTR & AUD SEL SW | |
| 1 | KA-10 | 150 AMPLIFIER (KG) | |

EQUIPMENT TABLE

| WIRE CODE NO. | GA | MATERIAL | LG | TERMINALS | | SERIALS |
|---|---|---|---|---|---|---|
| BROWN & WHITE | 20 | BELDEN 8525 | | S-1367-1-6 | SOLDER | 0770619 |
| WHITE | 20 | | | S-1367-1-6 | SOLDER | |
| GRAY | 20 | | | S-1367-1-6 | SOLDER | |
| VIOLET | 20 | | | S-1367-1-6 | SOLDER | |
| BLUE | 20 | | | S-1367-1-6 | SOLDER | |
| GREEN | 20 | | | S-1367-1-6 | SOLDER | |
| YELLOW | 20 | | | S-1367-1-6 | SOLDER | |
| ORANGE | 20 | | | S-1367-1-6 | SOLDER | |
| RED | 20 | | | 2 | SOLDER | |
| BROWN | 20 | | | S-1367-1-6 | SOLDER | |
| BLACK | 20 | BELDEN 8525 | | 1 | SOLDER | 0770619 |

WIRE TABLE

CESSNA AIRCRAFT CO COMMERCIAL AIRCRAFT DIVISION WICHITA KANSAS

| | NAME | DATE |
|---|---|---|
| DRAWN | G WOOD | 12-20-62 |
| GROUP | | 2-22-63 |
| CHECK | | 2-25-63 |
| PROJ | | 3-1-63 |

TITLE: WIRING DIAGRAM — TRANSMITTER & AUDIO SELECTOR SWITCH WITH KING KA-10 AMPLIFIER

Cessna.

DWG NO. 1270405

SUPERSEDED BY | SUPERSEDES | MODEL: 210 | REV. A | PAGE: 17-16

FORM NO 80-161

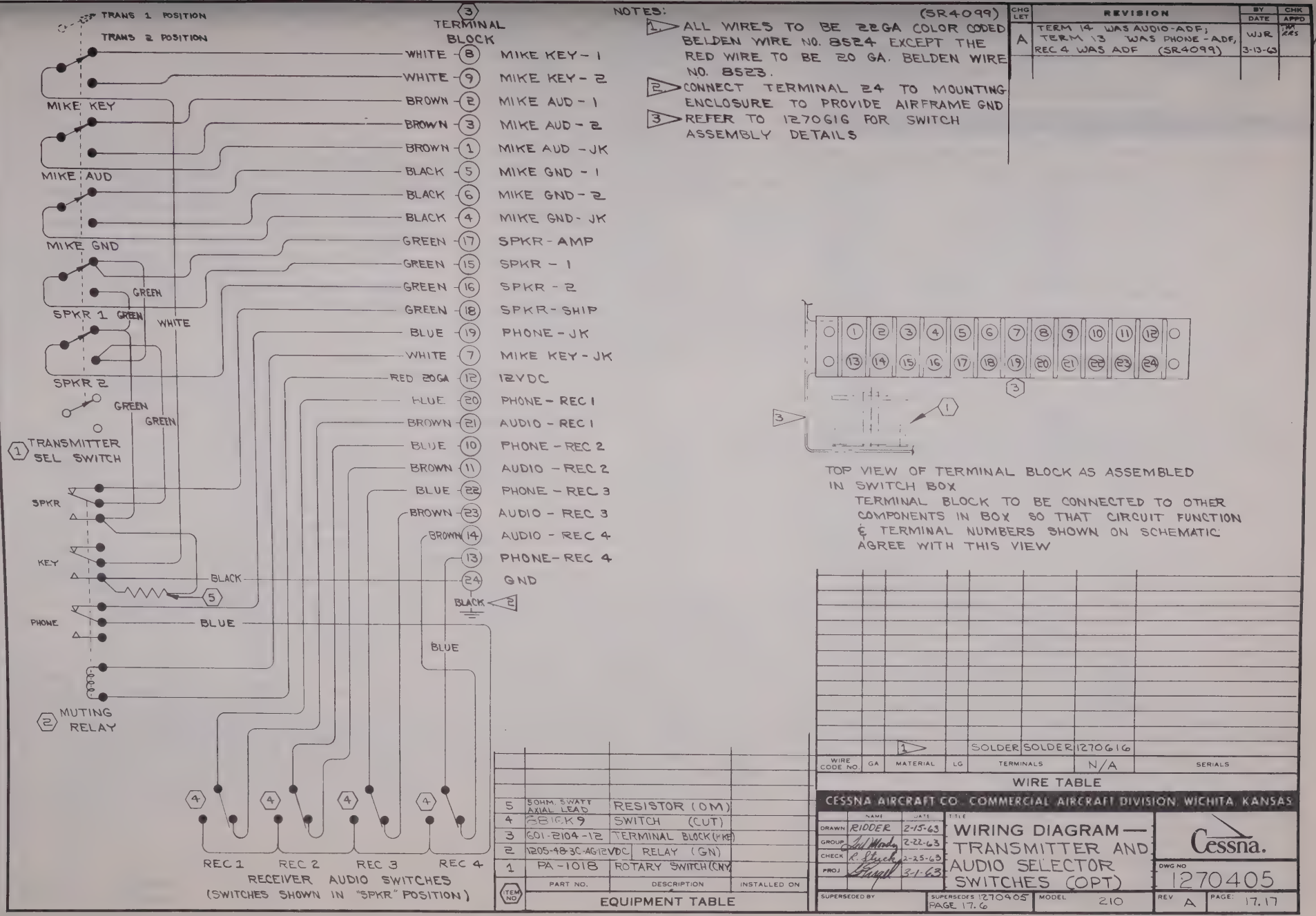


NOTES: (SR4099)

1. ALL WIRES TO BE 22GA COLOR CODED BELDEN WIRE NO. 8524 EXCEPT THE RED WIRE TO BE 20 GA. BELDEN WIRE NO. 8523.
2. CONNECT TERMINAL 24 TO MOUNTING ENCLOSURE TO PROVIDE AIRFRAME GND
3. REFER TO 1270616 FOR SWITCH ASSEMBLY DETAILS

| CHG LET | REVISION | BY DATE | CHK APPD |
|---|---|---|---|
| A | TERM 14 WAS AUDIO-ADF; TERM 13 WAS PHONE-ADF, REC 4 WAS ADF (SR4099) | WJR 3-13-63 | JWA RRS |

AWC




TOP VIEW OF TERMINAL BLOCK AS ASSEMBLED IN SWITCH BOX
TERMINAL BLOCK TO BE CONNECTED TO OTHER COMPONENTS IN BOX SO THAT CIRCUIT FUNCTION & TERMINAL NUMBERS SHOWN ON SCHEMATIC AGREE WITH THIS VIEW

| WIRE CODE NO. | GA | MATERIAL | LG | TERMINALS | | SERIALS |
|---|---|---|---|---|---|---|
| | | 1 | | SOLDER | SOLDER | 1270616 |

WIRE TABLE

| TEM NO | PART NO. | DESCRIPTION | INSTALLED ON |
|---|---|---|---|
| 5 | 50HM 5WATT AXIAL LEAD | RESISTOR (OM) | |
| 4 | 5B16K9 | SWITCH (CUT) | |
| 3 | 601-2104-12 | TERMINAL BLOCK (MKE) | |
| 2 | 1205-98-3C-AG-12VDC | RELAY (GN) | |
| 1 | PA-1018 | ROTARY SWITCH (CNY) | |

EQUIPMENT TABLE

CESSNA AIRCRAFT CO. COMMERCIAL AIRCRAFT DIVISION, WICHITA, KANSAS

| | NAME | DATE |
|---|---|---|
| DRAWN | RIDDER | 2-15-63 |
| GROUP | | 2-22-63 |
| CHECK | R. Stuck | 2-25-63 |
| PROJ | | 3-1-63 |

TITLE: WIRING DIAGRAM — TRANSMITTER AND AUDIO SELECTOR SWITCHES (OPT)

Cessna.

DWG NO 1270405

SUPERSEDED BY | SUPERSEDES 1270405 PAGE 17.6 | MODEL 210 | REV A | PAGE 17.17

FORM NO. 80-161

| CHG LET | REVISION | BY DATE | CHK APPD |
|---|---|---|---|
| | | | |

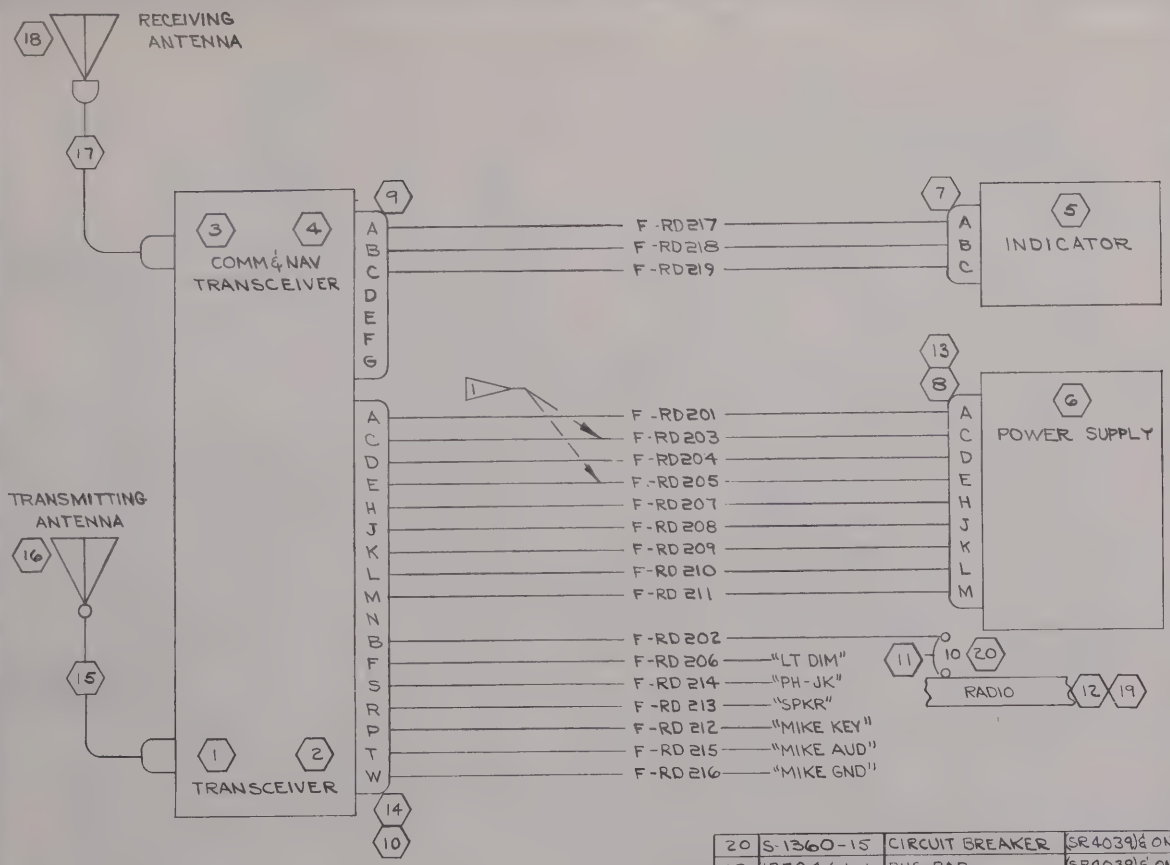


Inactive SER 21058221 & ON
W. J. R. 5-14-63
RRS JM NMC

NOTE:
1. WIRES -RD203 & -RD205 TO BE TWISTED TOGETHER TO FORM A TWISTED PAIR (FOR REDUCED POWER SUPPLY HUM)
2. WIRES -RD206, -212, -213, -214, -215, -216 TO BE CODED "LT DIM", "MIKE KEY", "SPKR", "PH-JK", "MIKE AUD", "MIKE GND" RESPECTIVELY. NUMERICAL CODING PER CES 1100 IS OPTIONAL ON THESE WIRES.
3. WHEN THIS DIAGRAM IS USED IN CONJUNCTION WITH AN ISOLATION AMPLIFIER AND THE SPEAKER CIRCUIT IS NOT USED, F-RD213 IS TO BE CONNECTED TO GND THRU AN OHMITE 5 OHM, 5 WATT AXIAL LEAD RESISTOR OR EQUIVALENT.

| ITEM NO | PART NO. | DESCRIPTION | SERIALS |
|---|---|---|---|
| 20 | S-1360-15 | CIRCUIT BREAKER | (SR4039) & ON |
| 19 | 1270461-1 | BUS BAR | (SR4039) & ON |
| 18 | 1270420-9 | OMNI ANT. INSTL | |
| 17 | 0770033-63 | CABLE ASSY | |
| 16 | 1270420-4 | XMTR ANT. INSTL | |
| 15 | 0770033-56 | CABLE ASSY | |
| 14 | 092-0004-00 | HOOD (KG) | |
| 13 | 092-0003-00 | HOOD (KG) | |
| 12 | 1270429-1 | BUS BAR | THRU (SR4039) |
| 11 | S-1232-15 | CIRCUIT BREAKER | THRU (SR4039) |
| 10 | 030-2002-00 | RECEPTACLE (KG) | |
| 9 | 030-2013-00 | CONNECTOR (KG) | |
| 8 | 030-2000-00 | RECEPTACLE (KG) | |
| 7 | MS3106A10SL-3S | CONNECTOR (KG) | |
| 6 | KS-501 (A) | POWER SUPPLY (KG) | |
| 5 | KI-200 | INDICATOR (KG) | |
| 4 | KX-120 | COMM & NAV XCVR (KG) | |
| 3 | KX-100 | COMM & NAV XCVR (KG) | |
| 2 | KY-95 | TRANSCEIVER (KG) | |
| 1 | KY-90 | TRANSCEIVER (KG) | |

EQUIPMENT TABLE

| WIRE CODE NO. | GA | MATERIAL | LG | TERMINALS | | | SERIALS |
|---|---|---|---|---|---|---|---|
| F-RD219 | 22 | | | SOLDER | SOLDER | 1270413 | |
| F-RD218 | 22 | | | | SOLDER | | |
| F-RD217 | 22 | | | | SOLDER | | |
| F-RD216 | 22 | | | | 2 | | |
| F-RD215 | 22 | | | | | | |
| F-RD214 | 22 | | | | | | |
| F-RD213 | 22 | | | | | | |
| F-RD212 | 22 | | | | 2 | | |
| F-RD211 | 22 | | | | SOLDER | | |
| F-RD210 | 22 | | | | | | |
| F-RD209 | 22 | | | | | | |
| F-RD208 | 22 | | | | | | |
| F-RD207 | 22 | | | | SOLDER | | |
| F-RD206 | 18 | | | | 2 | | |
| F-RD205 | 16 | | | | SOLDER | | |
| F-RD204 | 22 | | | | SOLDER | | |
| F-RD203 | 16 | | | | SOLDER | | |
| F-RD202 | 16 | | | | S-1367-1-8 | | |
| F-RD201 | 22 | | | SOLDER | SOLDER | 1270413 | |

WIRE TABLE

CESSNA AIRCRAFT CO., COMMERCIAL AIRCRAFT DIVISION, WICHITA, KANSAS

| | NAME | DATE |
|---|---|---|
| DRAWN | RIDDER | 3-8-63 |
| GROUP | [illegible] | 3 12 63 |
| CHECK | R. Stuck | 3-28-63 |
| PROJ | N. McCarter | 3-29-63 |

TITLE: WIRING DIAGRAM — KING KY-90, KY-95, KX-100 & KX-120 (OPT)

Cessna.

DWG NO. 1270405

| SUPERSEDED BY | SUPERSEDES | MODEL | REV | PAGE |
|---|---|---|---|---|
| 1270405 PAGE 17.18.1 | | 210 | | 17.18 |

(SR4039-9)

| CHG LET | REVISION | BY / DATE | CHK / APPD |
|---|---|---|---|
| A | BY REVISION: ADD DETAIL A, 030-2038-00 RECEPTACLE (KG) AND GRY/GRN & GRY/RED WIRES. ADD NOTE 3. (SR 4448) | GLW 10-11-63 | RES AHA TM NMC |

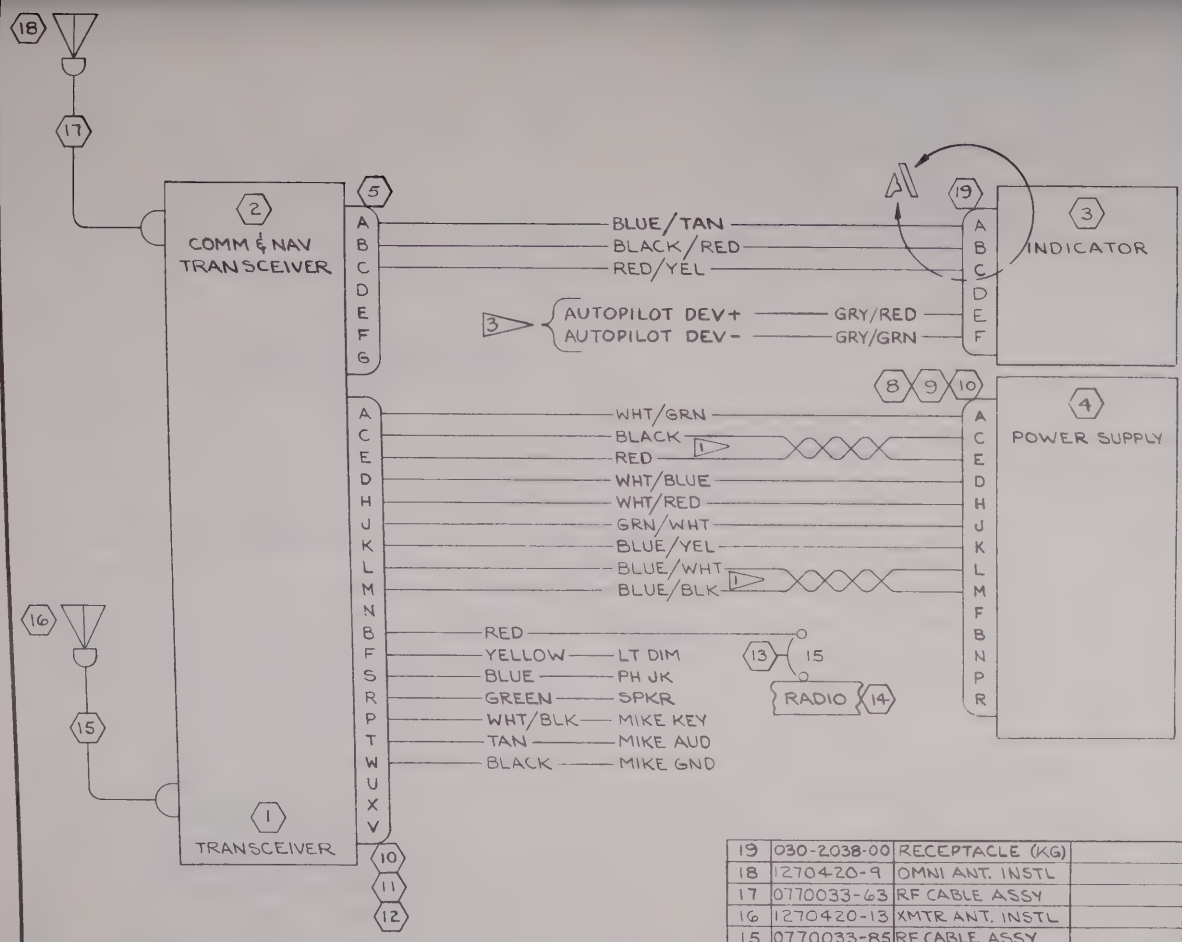


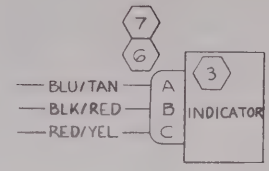


DETAIL A
APPLIES THRU (SR 4448)

NOTES:

1. WIRES FLAGGED THUS TO BE TWISTED TOGETHER TO FORM A TWISTED PAIR.
2. WHEN THIS DIAGRAM IS USED IN CONJUNCTION WITH AN ISOLATION AMPLIFIER AND THE SPEAKER CIRCUIT IS NOT USED, THE GREEN WIRE IS TO BE CONNECTED TO GND THRU AN OHMITE 5 OHM, 5 WATT AXIAL LEAD RESISTOR.
3. END OF WIRES TO BE COVERED WITH SLEEVING & TIED INTO CABLE UNTIL USED.

| ITEM NO | PART NO | DESCRIPTION | INSTALLED ON |
|---|---|---|---|
| 19 | 030-2038-00 | RECEPTACLE (KG) | |
| 18 | 1270420-9 | OMNI ANT. INSTL | |
| 17 | 0770033-63 | RF CABLE ASSY | |
| 16 | 1270420-13 | XMTR ANT. INSTL | |
| 15 | 0770033-85 | RF CABLE ASSY | |
| 14 | 1270461-1 | BUS BAR | |
| 13 | S-1360-15 | CIRCUIT BREAKER | |
| 12 | 030-1010-00 | HOOD (KG) | |
| 11 | 030-2002-00 | RECEPTACLE (KG) | |
| 10 | 030-1008-00 | LEVER & PIVOT ASSY (KG) | |
| 9 | 030-1009-00 | HOOD (KG) | |
| 8 | 030-2000-00 | RECEPTACLE (KG) | |
| 7 | 030-1003-00 | CLAMP (KG) | |
| 6 | 030-2017-00 | RECEPTACLE (KG) | |
| 5 | 030-2013-00 | CONNECTOR (KG) | |
| 4 | KS-501 (A) | POWER SUPPLY (KG) | |
| 3 | KI-200 | INDICATOR (KG) | |
| 2 | KX-120 | TRANSCEIVER (KG) | |
| 1 | KY-95 | TRANSCEIVER (KG) | |

EQUIPMENT TABLE

| WIRE CODE NO | GA | MATERIAL | LG | TERMINALS | | N/A | SERIALS |
|---|---|---|---|---|---|---|---|
| GRY/RED | 22 | S-1460-22-8-2 | | SOLDER | | 1270464 | |
| GRY/GRN | 22 | S-1460-22-8-5 | | | | | |
| RED/YEL | 22 | S-1460-22-2-4 | | | SOLDER | | |
| BLK/RED | 22 | S-1460-22-0-2 | | | SOLDER | | |
| BLU/TAN | 22 | S-1460-22-6-10 | | | SOLDER | | |
| BLACK | 22 | S-1460-22-0 | | | | | |
| TAN | 22 | S-1460-22-10 | | | | | |
| WHT/BLK | 22 | S-1460-22-9-0 | | | | | |
| GREEN | 20 | S-1460-20-5 | | | | | |
| BLUE | 22 | S-1460-22-6 | | | | | |
| YELLOW | 18 | S-1460-18-4 | | | | | |
| RED | 16 | S-1460-16-2 | | | S-1367-1-6 | | |
| BLU/BLK | 22 | S-1460-22-6-0 | | | SOLDER | | |
| BLU/WHT | 22 | S-1460-22-6-9 | | | | | |
| BLU/YEL | 22 | S-1460-22-6-4 | | | | | |
| GRN/WHT | 20 | S-1460-20-5-9 | | | | | |
| WHT/RED | 22 | S-1460-22-9-2 | | | | | |
| WHT/BLU | 22 | S-1460-22-9-6 | | | | | |
| RED | 16 | S-1460-16-2 | | | | | |
| BLACK | 16 | S-1460-16-0 | | | | | |
| WHT/GRN | 22 | S-1460-22-9-5 | | SOLDER | SOLDER | 1270464 | |

WIRE TABLE

CESSNA AIRCRAFT CO. COMMERCIAL AIRCRAFT DIVISION, WICHITA, KANSAS

| | NAME | DATE |
|---|---|---|
| DRAWN | RIDDER | 5-15-63 |
| GROUP | [illegible] | 6-5-63 |
| CHECK | [illegible] | 5-31-63 |
| PROJ | H. McCarter | 6-6-63 |

TITLE: WIRING DIAGRAM — KING KY-95 & KX-120 (OPT)

Cessna.

DWG NO. 1270405

SUPERSEDED BY

SUPERSEDES 1270405 PAGE 17.18

MODEL 210

REV A

PAGE 17.18.1

FORM NO. 80-161

(SR 4039-9)

| CHG LET | REVISION | BY DATE | CHK APPD |
|---|---|---|---|
| A | BY REVISION: TITLE WAS "ARC TYPE R-502B MARKER BEACON RECEIVER (OPT)" S-382-1 WAS S-382-2 WIRE CONNECTIONS CHANGED ON S-382-1 & S-392-1 SER 21058221 & ON | GLW 9-3-63 | |
| B | BY REVISION: PINS 1 & 2 ON MKR BCN LIGHTS HAVE BEEN REVERSED | GLW 10-1-63 | |
| C | BY REVISION: ADD 1K OHM RESISTOR & 470 OHM RESISTOR. ADD BLK/BLU WIRE TO SHIPS GND. BLK/BLU WIRE WAS BLK/BLK GN FLD | GLW 1 29 64 | |

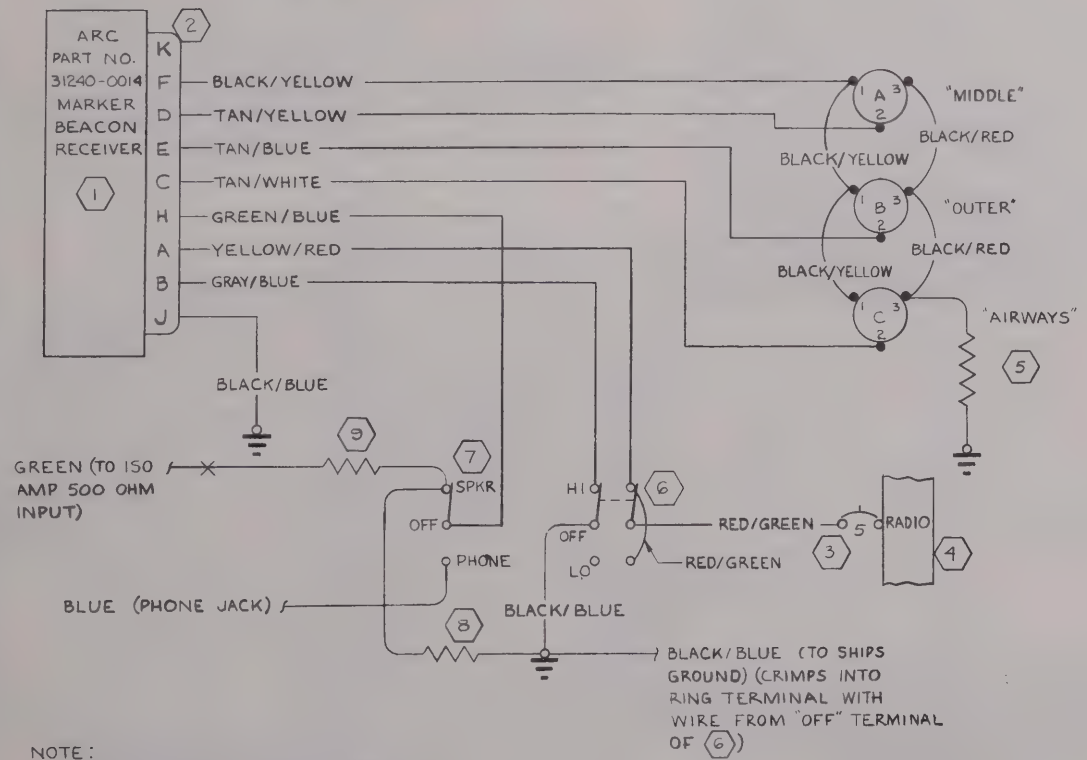


NOTE:

1. WIRE COLOR DESIGNATION AS FOLLOWS: BASE COLOR/STRIPE.

| ITEM NO | PART NO. | DESCRIPTION | INSTALLED ON |
|---|---|---|---|
| 9 | 1K Ω, ½ WATT | RESISTOR (OM) | |
| 8 | 470 Ω, ½ WATT | RESISTOR (OM) | |
| 7 | S-382-1 | SWITCH | |
| 6 | S-392-1 | SWITCH | |
| 5 | 40Ω, 3 WATT | RESISTOR (OM) | |
| 4 | 1270461-1 | BUS BAR | |
| 3 | S-1360-5 | CIRCUIT BREAKER | |
| 2 | 28371-009 | PLUG (ARC) | |
| 1 | 31240-0014 | MARKER BCN RCVR | (ARC) |

EQUIPMENT TABLE

| WIRE CODE NO. | GA | MATERIAL | LG | TERMINALS | | N/A | SERIALS |
|---|---|---|---|---|---|---|---|
| YEL/RED | 20 | S-1460-20-1-2 | | SOLDER | S-1367-1-6 | 0770692 | |
| BLACK/BLUE | 22 | S-1460-22-0-6 | | SOLDER | S-1367-1-8 | | |
| GRAY/BLU | 22 | S-1460-22-8-6 | | S-1367-1-6 | SOLDER | | |
| GREEN/BLU | 20 | S-1460-20-5-6 | | S-1367-1-6 | SOLDER | | |
| TAN/WHT | 22 | S-1460-22-10-9 | | SOLDER | SOLDER | | |
| TAN/BLUE | 22 | S-1460-22-10-6 | | SOLDER | SOLDER | | |
| BLACK/YEL | 22 | S-1460-22-0-9 | | SOLDER | SOLDER | | |
| TAN/YEL | 22 | S-1460-22-10-4 | | SOLDER | SOLDER | | |
| RED/GREEN | 20 | S-1460-20-2-5 | | S-1367-1-6 | S-1367-1-6 | | |
| GREEN | 20 | S-1460-20-5 | | S-1367-1-6 | | | |
| BLUE | 22 | S-1460-22-6 | | S-1367-1-6 | | 0770692 | |

WIRE TABLE

CESSNA AIRCRAFT CO. COMMERCIAL AIRCRAFT DIVISION, WICHITA, KANSAS

| | NAME | DATE |
|---|---|---|
| DRAWN | G WOOD | 9-22-63 |
| GROUP | [illegible] | 6-19-63 |
| CHECK | R Stuck | 5-13-63 |
| PROJ | | |

TITLE: WIRING DIAGRAM — CESSNA MARKER BEACON 300 (OPT) (ARC TYPE 502B)

Cessna.

DWG NO 1270405

REV C

PAGE 17.19

SUPERSEDED BY:

SUPERSEDES:

MODEL: 210

FORM NO 80-161

(SR 4233)

| CHG LET | REVISION | BY DATE | CHK APPD |
|---|---|---|---|
| | | | |

NOTE:

1. COLOR CODE DESIGNATION AS FOLLOWS: BASE COLOR/STRIPE.
2. MACHINE STAMP CIRCUIT FUNCTION ON THESE WIRES.
3. DEV+, DEV- & JUMPER FROM PIN J TO PIN M ARE REQD FOR NAV-O-MATIC 300 AUTOPILOT.
4. WIRE "AUX AUD" TO BE INSULATED ON FREE END WITH VINYL SLEEVING & TIED IN CABLE ASSY UNTIL A RADIO COMBINATION REQUIRES ITS USE.
5. IDENTICAL 16 PIN CONNECTORS ARE PART OF NARCO CONNECTOR KIT EL-2052. KIT EL-2052 NOT SUPPLIED WITH MARK-12 INSTL KIT.
6. NARCO PLUG NO. K-41116-1 SUPPLIED WITH MK 12 INSTL KIT.
7. MS3106A-20-27S PLUG & MS3057-12 CLAMP SUPPLIED WITH VOA-4 OR VOA-5 INDICATOR.

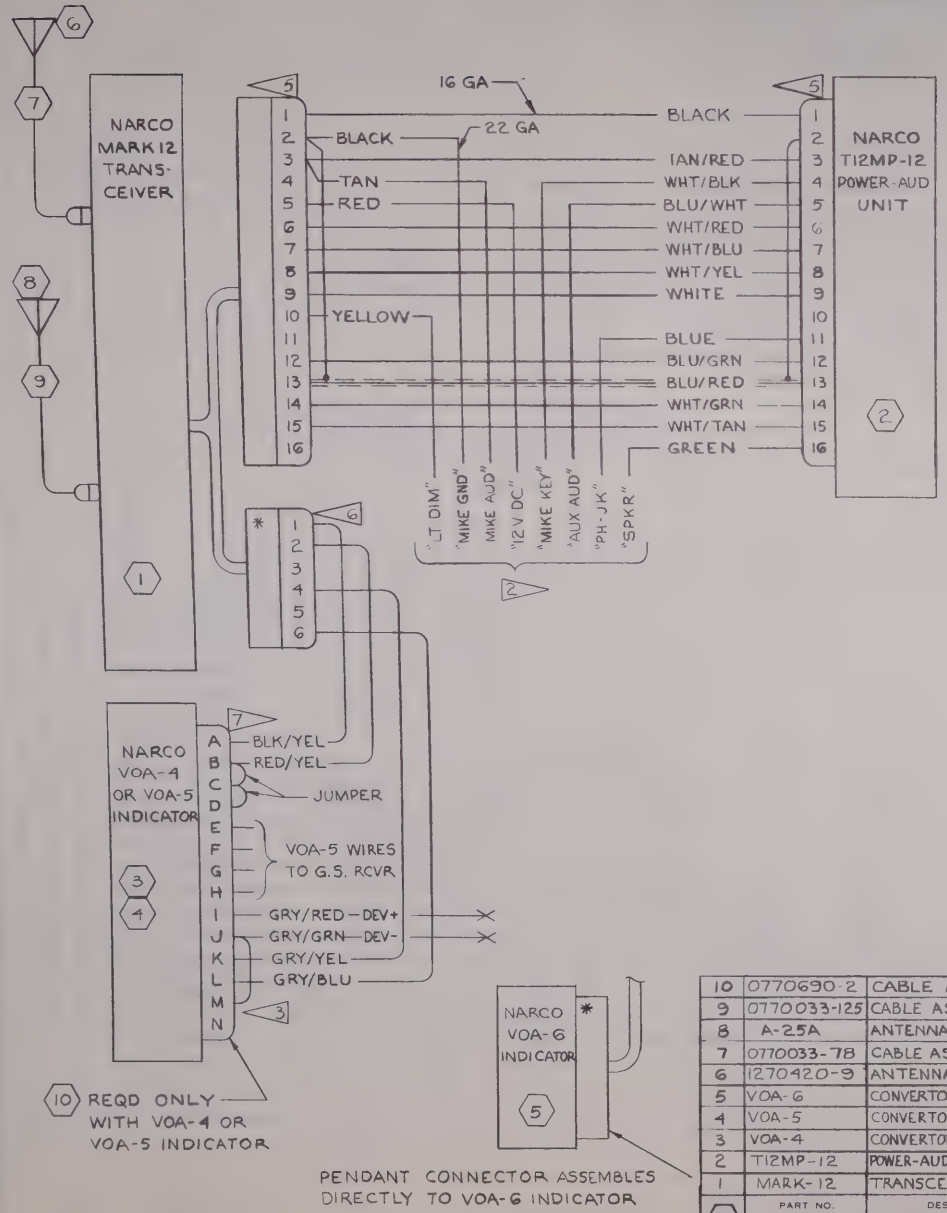


| WIRE CODE NO. | GA | MATERIAL | LG | TERMINALS | | N/A | SERIALS |
|---|---|---|---|---|---|---|---|
| GREEN | 20 | S-1460-20-5 | | SOLDER | | 0770690 | |
| GRY/BLU | 22 | S-1460-22-B6 | | SOLDER | SOLDER | | |
| GRY/YEL | 22 | S-1460-22-8-4 | | SOLDER | SOLDER | | |
| GRY/GRN | 22 | S-1460-22-8-5 | | SOLDER | S-1370-0 | | |
| GRY/RED | 22 | S-1460-22-8-2 | | SOLDER | S-1370-0 | | |
| RED/YEL | 22 | S-1460-22-2-4 | | SOLDER | SOLDER | | |
| BLK/YEL | 22 | S-1460-22-0-4 | | SOLDER | SOLDER | | |
| BLACK | 22 | S-1460-22-0 | | SOLDER | | | |
| TAN | 22 | S-1460-22-10 | | SOLDER | | | |
| WHT/TAN | 22 | S-1460-22-9-10 | | SOLDER | SOLDER | | |
| WHT/GRN | 22 | S-1460-22-9-5 | | SOLDER | SOLDER | | |
| BLU/RED | 22S | S-1461-22-6-2 | | SOLDER | SOLDER | | |
| BLU/GRN | 22 | S-1460-22-6-5 | | SOLDER | SOLDER | | |
| BLUE | 22 | S-1460-22-6 | | SOLDER | | | |
| WHT/YEL | 22 | S-1460-22-9-4 | | SOLDER | SOLDER | | |
| WHT/BLU | 22 | S-1460-22-9-6 | | SOLDER | SOLDER | | |
| WHT/RED | 22 | S-1460-22-9-2 | | SOLDER | SOLDER | | |
| BLU/WHT | 22 | S-1460-22-6-9 | | SOLDER | | | |
| WHT/BLK | 22 | S-1460-22-9-0 | | SOLDER | | | |
| TAN/RED | 22 | S-1460-22-10-2 | | SOLDER | SOLDER | | |
| | | | | | | | |
| YELLOW | 18 | S-1460-18-4 | | SOLDER | | | |
| RED | 16 | S-1460-16-2 | | SOLDER | | | |
| BLACK | 16 | S-1460-16-0 | | SOLDER | SOLDER | | |
| WHITE | 14 | | | SOLDER | SOLDER | 0770690 | |

WIRE TABLE

| ITEM NO. | PART NO. | DESCRIPTION | INSTALLED ON |
|---|---|---|---|
| 10 | 0770690-2 | CABLE ASSY | |
| 9 | 0770033-125 | CABLE ASSY-COMM | |
| 8 | A-25A | ANTENNA INSTL (ARC) | |
| 7 | 0770033-78 | CABLE ASSY-OMNI | |
| 6 | 1270420-9 | ANTENNA INSTL | |
| 5 | VOA-6 | CONVERTOR-IND (NARO) | |
| 4 | VOA-5 | CONVERTOR IND (NARO) | |
| 3 | VOA-4 | CONVERTOR-IND (NARO) | |
| 2 | T12MP-12 | POWER-AUDIO UNIT (NARO) | |
| 1 | MARK-12 | TRANSCEIVER (NARO) | |

EQUIPMENT TABLE

CESSNA AIRCRAFT CO COMMERCIAL AIRCRAFT DIVISION WICHITA KANSAS

| | NAME | DATE |
|---|---|---|
| DRAWN | G WOOD | 4-26-63 |
| GROUP | W. Mark | 5-7-63 |
| CHECK | R. Shuck | 5-13-63 |
| PROJ | N. McClain | 5-17-63 |

TITLE: WIRING DIAGRAM — NARCO MARK-12 WITH VOA-4, VOA-5 OR VOA-6 (OPT)

Cessna.

DWG NO. 1270405

| SUPERSEDED BY | SUPERSEDES | MODEL: | REV: | PAGE: |
|---|---|---|---|---|
| | | 210 | | 17.20 |

FORM NO. 80-161

(SR 4039-9)

| CHG LET | REVISION | BY DATE | CHK APPD |
|---|---|---|---|
| | | | |

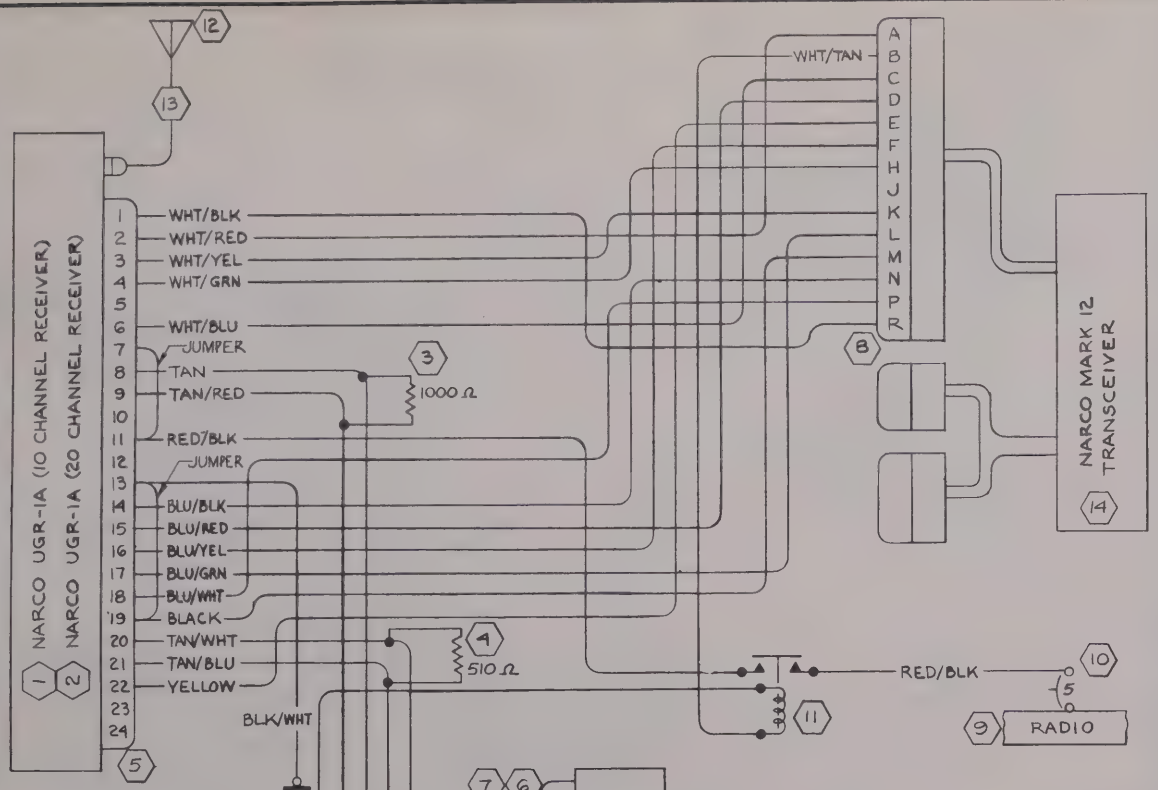


| ITEM NO | PART NO. | DESCRIPTION | INSTALLED ON |
|---|---|---|---|
| 17 | K-41271-1 | CONNECTOR (NARO) | |
| 16 | T12MP-12 | POWER UNIT (NARO) | |
| 15 | VOA-5 | CONVERT.-IND (NARO) | |
| 14 | MARK 12 | TRANSCEIVER (NARO) | |
| 13 | 0770033-66 | RF CABLE ASSY | |
| 12 | 1270420-7 | GLIDESLOPE ANT INSTL | |
| 11 | 0770668-1 | RELAY COVER ASSY | |
| 10 | S-1360-5 | CIRCUIT BREAKER | |
| 9 | 1270461-1 | BUS BAR | |
| 8 | 41247-102 | CONNECTOR (NARO) | |
| 7 | 41228-6 | CLAMP (NARO) | |
| 6 | 41223-2 | PLUG (NARO) | |
| 5 | 41246-1 | CONN ASSY (NARO) | |
| 4 | 510Ω ±5% ½ WATT | RESISTOR (OM) "LITTLE DEVIL" | |
| 3 | 1000Ω ±10% ½ WATT | RESISTOR (OM) "LITTLE DEVIL" | |
| 2 | UGR-1A 20 CH | RECEIVER (NARO) | |
| 1 | UGR-1A 10 CH | RECEIVER (NARO) | |

EQUIPMENT TABLE

| WIRE CODE NO. | GA | MATERIAL | LG | TERMINALS | | N/A | SERIALS |
|---|---|---|---|---|---|---|---|
| TAN/BLU | 22 | S-1460-22-10-6 | | SOLDER | SOLDER | 1270648 | |
| TAN/WHT | 22 | S-1460-22-10-9 | | | | | |
| BLACK | 22 | S-1460-22-0 | | | | | |
| BLU/WHT | 22 | S-1460-22-6-9 | | | | | |
| BLU/GRN | 22 | S-1460-22-6-5 | | | | | |
| BLU/YEL | 22 | S-1460-22-6-4 | | | | | |
| BLU/RED | 22 | S-1460-22-6-2 | | | | | |
| BLU/BLK | 22 | S-1460-22-6-0 | | | | | |
| TAN/RED | 22 | S-1460-22-10-2 | | | | | |
| TAN | 22 | S-1460-22-10 | | | | | |
| WHT/BLU | 22 | S-1460-22-9-6 | | | | | |
| WHT/GRN | 22 | S-1460-22-9-5 | | | | | |
| WHT/YEL | 22 | S-1460-22-9-4 | | | | | |
| WHT/RED | 22 | S-1460-22-9-2 | | | | | |
| WHT/BLK | 22 | S-1460-22-9-0 | | | | | |
| WHT/TAN | 22 | S-1460-22-9-10 | | | | | |
| RED/BLK | 18 | S-1460-18-2-0 | | | | | |
| RED/WHT | 18 | S-1460-18-2-9 | | | | | |
| YELLOW | 18 | S-1460-18-4 | | | SOLDER | | |
| BLK/WHT | 18 | S-1460-18-0-9 | | | S-1367-1-8 | | |
| RED/BLK | 18 | S-1460-18-2-0 | | SOLDER | S-1367-1-6 | 1270648 | |

WIRE TABLE

CESSNA AIRCRAFT CO COMMERCIAL AIRCRAFT DIVISION, WICHITA, KANSAS

| | NAME | DATE |
|---|---|---|
| DRAWN | G WOOD | 5-14-63 |
| GROUP | H.F.W. | 7-1-63 |
| CHECK | R. Slack | 7-1-63 |
| PROJ | W. McCarter | 7-5-63 |

TITLE: WIRING DIAGRAM — NARCO UGR-1A GLIDESLOPE WITH NARCO MARK 12 & VOA-5 (OPT)

Cessna.

DWG NO. 1270405

| SUPERSEDED BY | SUPERSEDES 1270405 PAGES 17.10 & 17.10.1 | MODEL | REV | PAGE |
|---|---|---|---|---|
| | | 210 | | 17.21 |

FORM NO. 80-161

(SR 4039-11)

| CHG LET | REVISION | BY DATE | CHK APPD |
|---|---|---|---|
| A | BY REV: 29752 WAS 29758; 29753 WAS 29752; | HJB 8-14-64 | RRS |

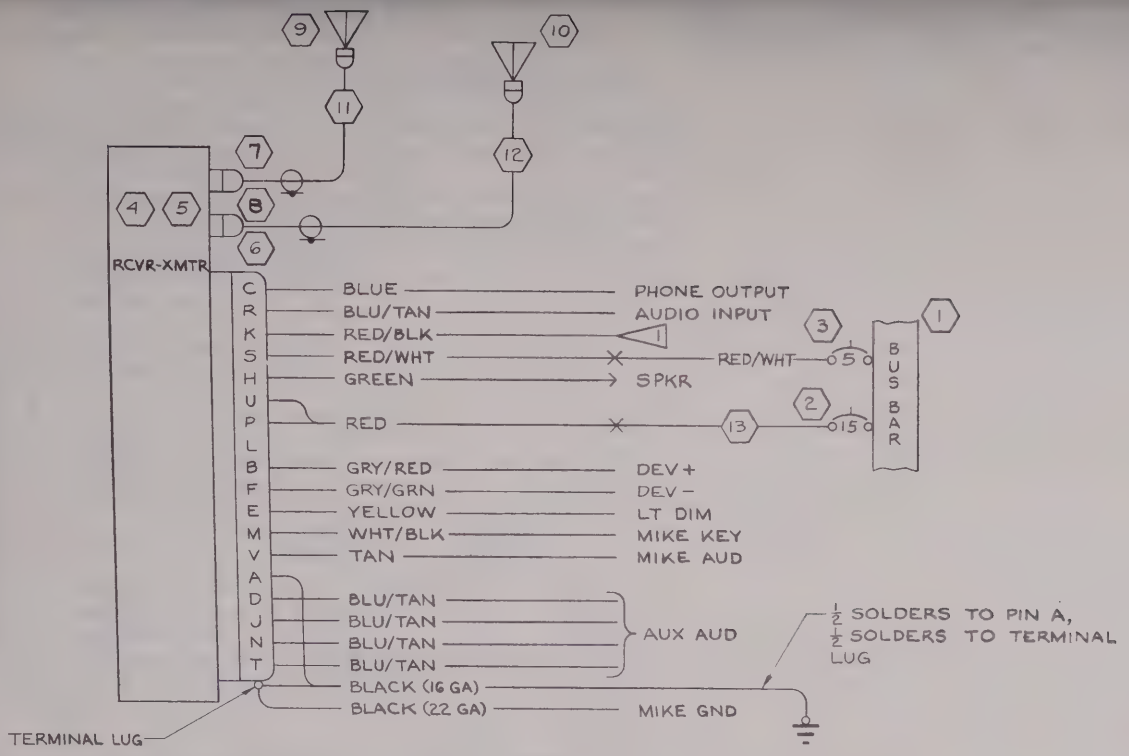


INACTIVE SER 21058511 & ON HJB 8-14-64 RRS

NOTES:

1. ON SINGLE CESSNA NAV/COM 300 INSTL, RED/BLK WIRE (PIN K) IS CONNECTED TO RED/WHT WIRE (PIN S) WITH AN S-1370-1 SPLICE, AND BLUE WIRE (PIN C) IS CONNECTED TO BLU/TAN WIRE (PIN R) WITH AN S-1370-1 SPLICE. WHEN THE NAV/COM 300 IS INSTALLED WITH OTHER RADIO UNITS, RED/WHT WIRE CONNECTS TO CKT BKR AS SHOWN & RED/BLK WIRE IS CUT OFF AT CONNECTOR; BLUE WIRE CONNECTS TO WIPER OF A SPKR-PHONE SWITCH & BLU/TAN WIRE CONNECTS TO SPKR TERMINAL OF SPKR-PHONE SWITCH.
2. WIRES NOT USED TO BE COVERED WITH VINYL SLEEVING & TIED INTO CABLE ASSY.
3. FOR DUAL 514A INSTALLATION, REF 1270405 PAGE 17.22.1.

(SEE PAGE 17.22.1 FOR CONTINUATION OF NOTES)

| ITEM NO | PART NO | DESCRIPTION | INSTALLED ON |
|---|---|---|---|
| 13 | RED | WIRE | |
| 12 | 0770033-129 | RF CABLE ASSY | |
| 11 | 0770033-127 | RF CABLE ASSY | |
| 10 | 1270420-9 | OMNI ANT. INSTL | |
| 9 | 1270420-13 | ANTENNA (ARC) | |
| 8 | 29752 | CONNECTOR (ARC) | |
| 7 | 29753 | CONNECTOR (ARC) | |
| 6 | 29747-0018 | CONNECTOR (ARC) | |
| 5 | 30410-1114 | RCVR-XMTR (360 CH) | (ARC) |
| 4 | 30410-1014 | RCVR-XMTR (100 CH) | (ARC) |
| 3 | S-1360-5 | CIRCUIT BREAKER | |
| 2 | S-1360-15 | CIRCUIT BREAKER | |
| 1 | 1270461-1 | BUS BAR | |

EQUIPMENT TABLE

| WIRE CODE NO. | GA | MATERIAL | LG | TERMINALS | | | SERIALS |
|---|---|---|---|---|---|---|---|
| RED/WHT | 18 | S-1460-18-2-9 | | S-1370-1 | S-1367-1-6 | 0770694 | |
| BLU/TAN | 22 | S-1460-22-6-10 | | SOLDER | | 0770695 | |
| BLU/TAN | 22 | S-1460-22-6-10 | | | | | |
| BLU/TAN | 22 | S-1460-22-6-10 | | | | | |
| BLACK | 16 | S-1460-16-0 | | | S-1367-2-8 | | |
| WHT/BLK | 22 | S-1460-22-9-0 | | | | | |
| GRY/GRN | 22 | S-1460-22-8-5 | | | | | |
| GRY/RED | 22 | S-1460-22-8-2 | | | | | |
| BLU/TAN | 22 | S-1460-22-6-10 | | | | | |
| BLU/TAN | 22 | S-1460-22-6-10 | | | | | |
| RED/WHT | 18 | S-1460-18-2-9 | | | | | |
| RED/BLK | 18 | S-1460-18-2-0 | | | | | |
| BLACK | 22 | S-1460-22-0 | | | | | |
| TAN | 22 | S-1460-22-10 | | | | | |
| BLUE | 22 | S-1460-22-6 | | | | | |
| RED | 16 | S-1460-16-2 | | | S-1370-2 | | |
| YELLOW | 18 | S-1460-18-4 | | | | | |
| GREEN | 20 | S-1460-20-5 | | SOLDER | | 0770695 | |

WIRE TABLE

CESSNA AIRCRAFT CO. COMMERCIAL AIRCRAFT DIVISION, WICHITA, KANSAS

| | NAME | DATE |
|---|---|---|
| DRAWN | G WOOD | 8-13-63 |
| GROUP | [illegible] | 9563 |
| CHECK | R. Stuck | 8-26-63 |
| PROJ | N. McCoy | 9-5-63 |

TITLE: WIRING DIAGRAM — CESSNA NAV/COM 300 (ARC TYPE 514A)

Cessna.

DWG NO. 1270405

| SUPERSEDED BY | PAGE | SUPERSEDES | MODEL | REV | PAGE |
|---|---|---|---|---|---|
| 1270475 | 2.7.1.0 | | 210 | A | 17.22 |

FORM NO. 80-161

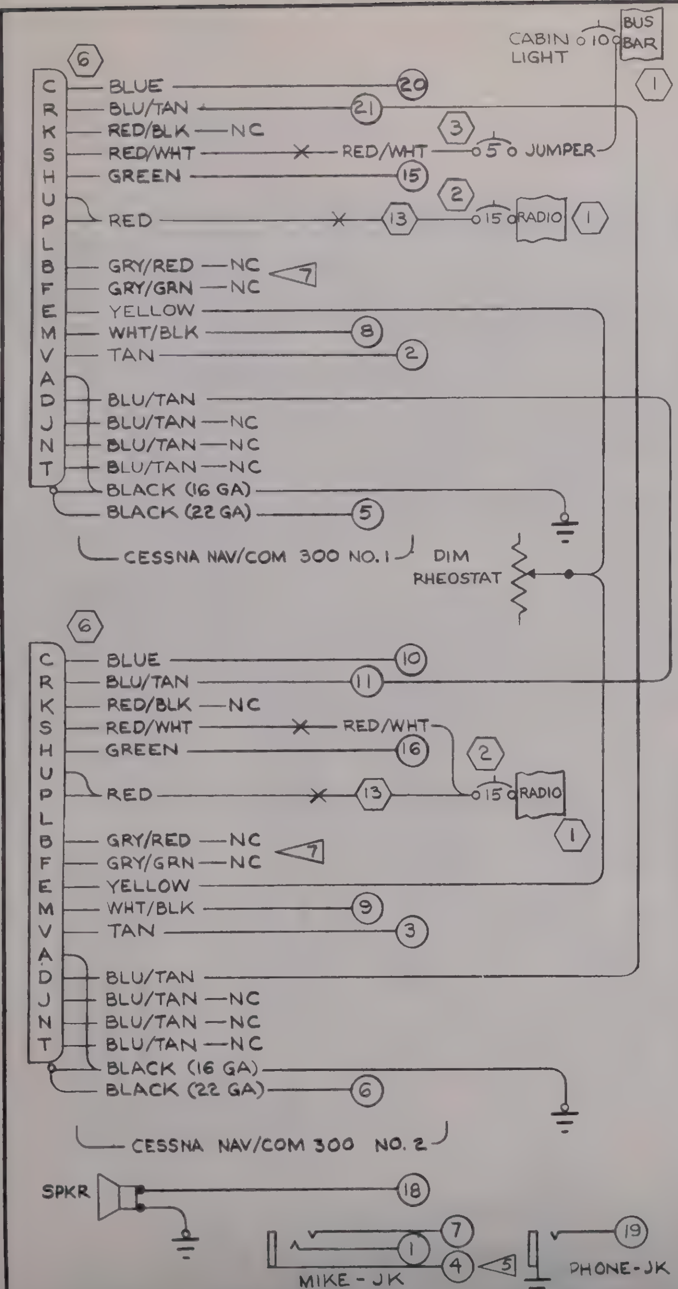


TYPICAL INTERCONNECTION OF DUAL CESSNA NAV/COM 300 SYSTEMS 4

(SR4039-11)

NOTES CONTINUED:

4. CIRCLED NUMBERS "○" REFER TO TERMINALS ON TRANSMITTER AND AUDIO SELECTOR SWITCH ASSY (REF 1270405, PAGE 17.17)
5. MIKE JACK IS GROUNDED AT RCVR-XMTR UNITS SO ON DUAL INSTALLATIONS MUTING RELAY WILL FUNCTION ONLY WHEN XMTR SEL SWITCH IS CORRECTLY POSITIONED. I.E. WHEN XMTR #2 IS SELECTED & THERE IS NO 2ND XMTR INSTALLED, AUDIO MUTING WILL NOT OCCUR.
6. CESSNA NAV/COM 300 AMPLIFIERS ARE "ALWAYS HOT" SPEAKER OUTPUTS FROM EACH SYSTEM DRIVE EITHER A 5 OHM, 10 WATT DUMMY LOAD OR THE SHIP'S SPEAKER AS DETERMINED BY THE TRANSMITTER SELECTED (REF 1270405, PAGE 17.17)
7. WHEN AN OPTIONAL NAV-O-MATIC AUTOPILOT WITH OMNI COUPLER IS COMBINED WITH A CESSNA NAV/COM 300, THE GRY/RED WIRE CONNECTS TO DEV+ CIRCUIT & THE GRY/GRN WIRE CONNECTS TO DEV− CIRCUIT.

INACTIVE SER 21058511 & ON HJB 8-14-64

| CHG LET | REVISION | BY DATE | CHK APPD |
|---|---|---|---|
| | | | |

| WIRE CODE NO. | GA | MATERIAL | LG | TERMINALS | | SERIALS |
|---|---|---|---|---|---|---|

WIRE TABLE

| ITEM NO | PART NO. | DESCRIPTION | INSTALLED ON |
|---|---|---|---|

EQUIPMENT TABLE

CESSNA AIRCRAFT CO COMMERCIAL AIRCRAFT DIVISION WICHITA, KANSAS

| | NAME | DATE |
|---|---|---|
| DRAWN | G WOOD | 8-27-63 |
| GROUP | [signature] | 9-5-63 |
| CHECK | R. Stuck | 9-4-63 |
| PROJ | N. McCartn | 9-5-63 |

TITLE: WIRING DIAGRAM — CESSNA NAV/COM 300 (ARC TYPE 514A)

Cessna.

DWG NO 1270405

SUPERSEDED BY 1270475 PAGE 2.7.1.1 | SUPERSEDES | MODEL 210 | REV | PAGE 17.22.1

FORM NO 80-161

(SR4338)

| CHG LET | REVISION | BY DATE | CHK APPD |
|---|---|---|---|
| | | | |

NOTES:

1. GRY/RED WIRE IS "DEV +" CIRCUIT & GRY/GRN WIRE IS "DEV −" CIRCUIT FOR CONNECTION TO A VOR INDICATOR.
2. CONNECTORS REQUIRED FOR FABRICATING A COMPLETE SET OF INTERCONNECTING CABLES ARE INCLUDED IN ARC CONNECTOR KIT NO. 31682.
3. WING CABLE ASSY AND DIRECTIONAL GYRO CABLE ARE FOR REFERENCE ONLY THESE CABLES ARE IDENTICAL IN LENGTH AND COLOR CODING TO CABLES USED ON NAV-O-MATIC 300 INSTL.

| ITEM NO | PART NO. | DESCRIPTION | INSTALLED ON |
|---|---|---|---|
| 21 | 1270449-4 | CABLE ASSY | |
| 20 | 1270449-6 | CABLE ASSY | |
| 19 | 1270461-1 | BUS BAR | |
| 18 | RED | WIRE | |
| 17 | S-1360-10 | CIRCUIT BREAKER | |
| 16 | R-175-75-RS34 | RHEOSTAT (TRTA) | |
| 15 | YELLOW | WIRE | |
| 14 | 28371-0009 | CONNECTOR (ARC | <2 |
| 13 | 28505-0009 | CONNECTOR (ARC) | |
| 12 | 28326-0009 | CONNECTOR (ARC) | |
| 11 | 28326-0007 | CONNECTOR (ARC) | |
| 10 | 28326-0006 | CONNECTOR (ARC) | |
| 9 | 28371-0005 | CONNECTOR (ARC) | |
| 8 | 28371-0007 | CONNECTOR (ARC) | |
| 7 | 31683-0020 | CONNECTOR ASSY (ARC) | <2 |
| 6 | 30370-0100 | DIRECTIONAL GYRO | (ARC G-520A) |
| 5 | 26360-0000 | ROLL ACTUATOR | (ARC PA-510A) |
| 4 | 26360-0000 | PITCH ACTUATOR | (ARC PA-510A) |
| 3 | 30475-0000 | VERTICAL GYRO | (ARC G-519A) |
| 2 | 30520-0019 | COMPUTER (ARC) | (CA-520A) |
| 1 | 30510-1019 | CONTROL UNIT (ARC) | (C-520A) |

EQUIPMENT TABLE

| WIRE CODE NO | GA | MATERIAL | LG | TERMINALS | | N/A | SERIALS |
|---|---|---|---|---|---|---|---|
| GRY/YEL | 20 | S-1460-20-5-4 | | SOLDER | S-1367-1-B | 0770704 | |
| WHT/BLK | 22 | S-1460-22-9-0 | | | SOLDER | | |
| RED/BLK | 18 | S-1460-18-2-0 | | | | | |
| WHT/RED | 22 | S-1460-22-9-2 | | | | | |
| BLK/BLU | 22 | S-1460-22-0-6 | | | | | |
| WHT/YEL | 22 | S-1460-22-9-4 | | | | | |
| WHT/GRN | 22 | S-1460-22-9-5 | | | | | |
| WHT/BLU | 22 | S-1460-22-9-6 | | | | | |
| WHT/TAN | 22 | S-1460-22-9-10 | | | | | |
| RED/BLK | 18 | S-1460-18-2-0 | | | | | |
| WHT/RED | 22 | S-1460-22-9-2 | | | | | |
| WHT/BLU | 22 | S-1460-22-9-6 | | | | | |
| WHT/TAN | 22 | S-1460-22-9-10 | | | | | |
| WHT/YEL | 22 | S-1460-22-9-4 | | | | | |
| WHT/GRN | 22 | S-1460-22-9-5 | | SOLDER | SOLDER | 0770704 | |
| TAN/WHT | 22 | S-1460-22-10-9 | | SOLDER | SOLDER | 0770704 | |
| TAN/BLU | 22 | S-1460-22-10-6 | | | | | |
| TAN/YEL | 22 | S-1460-22-10-4 | | | | | |
| TAN/RED | 22 | S-1460-22-10-2 | | | SOLDER | | |
| YELLOW | 18 | S-1460-18-4 | | | S-1370-1 | | |
| RED | 16 | S-1460-16-2 | | | S-1370-2 | | |
| WHT/RED | 22 | S-1460-22-9-2 | | | SOLDER | | |
| BLU/TAN | 22 | S-1460-22-6-10 | | | | | |
| RED/WHT | 18 | S-1460-18-2-9 | | | | | |
| WHT/BLK | 22 | S-1460-22-9-0 | | | SOLDER | | |
| GRY/GRN | 22 | S-1460-22-8-5 | | | S-1370-1 | | |
| GRY/RED | 22 | S-1460-22-8-2 | | | S-1370-1 | | |
| BLU/WHT | 22 | S-1460-22-6-9 | | | SOLDER | | |
| RED/BLK | 18 | S-1460-18-2-0 | | | | | |
| TAN/WHT | 22 | S-1460-22-10-9 | | | | | |
| BLU/GRN | 22 | S-1460-22-6-5 | | | | | |
| TAN/BLU | 22 | S-1460-22-10-6 | | | | | |
| TAN/RED | 22 | S-1460-22-10-2 | | | | | |
| BLU/YEL | 22 | S-1460-22-6-4 | | | | | |
| TAN/YEL | 22 | S-1460-22-10-4 | | | | | |
| BLU/RED | 22 | S-1460-22-6-2 | | | | | |
| BLU/BLK | 22 | S-1460-22-6-0 | | | | | |
| TAN | 22 | S-1460-22-10 | | | | | |
| BLUE | 22 | S-1460-22-6 | | SOLDER | SOLDER | 0770704 | |

WIRE TABLE

CESSNA AIRCRAFT CO. COMMERCIAL AIRCRAFT DIVISION WICHITA KANSAS

| | NAME | DATE |
|---|---|---|
| DRAWN | RIDER | 9-5-63 |
| GROUP | | 9-22-63 |
| CHECK | E. Stuck | 9-18-63 |
| PROJ | N. McCarter | 11-14-63 |

TITLE: WIRING DIAGRAM — NAV-O-MATIC 400 SYSTEM (OPT)

Cessna.

DWG NO. 1270405

| SUPERSEDED BY | SUPERSEDES | MODEL: | REV: | PAGE: |
|---|---|---|---|---|
| | | 210 | | 17-23 |

(SR4338)

| CHG LET | ZONE | REVISION | BY DATE | CHK APPD |
|---|---|---|---|---|
| | | | | |

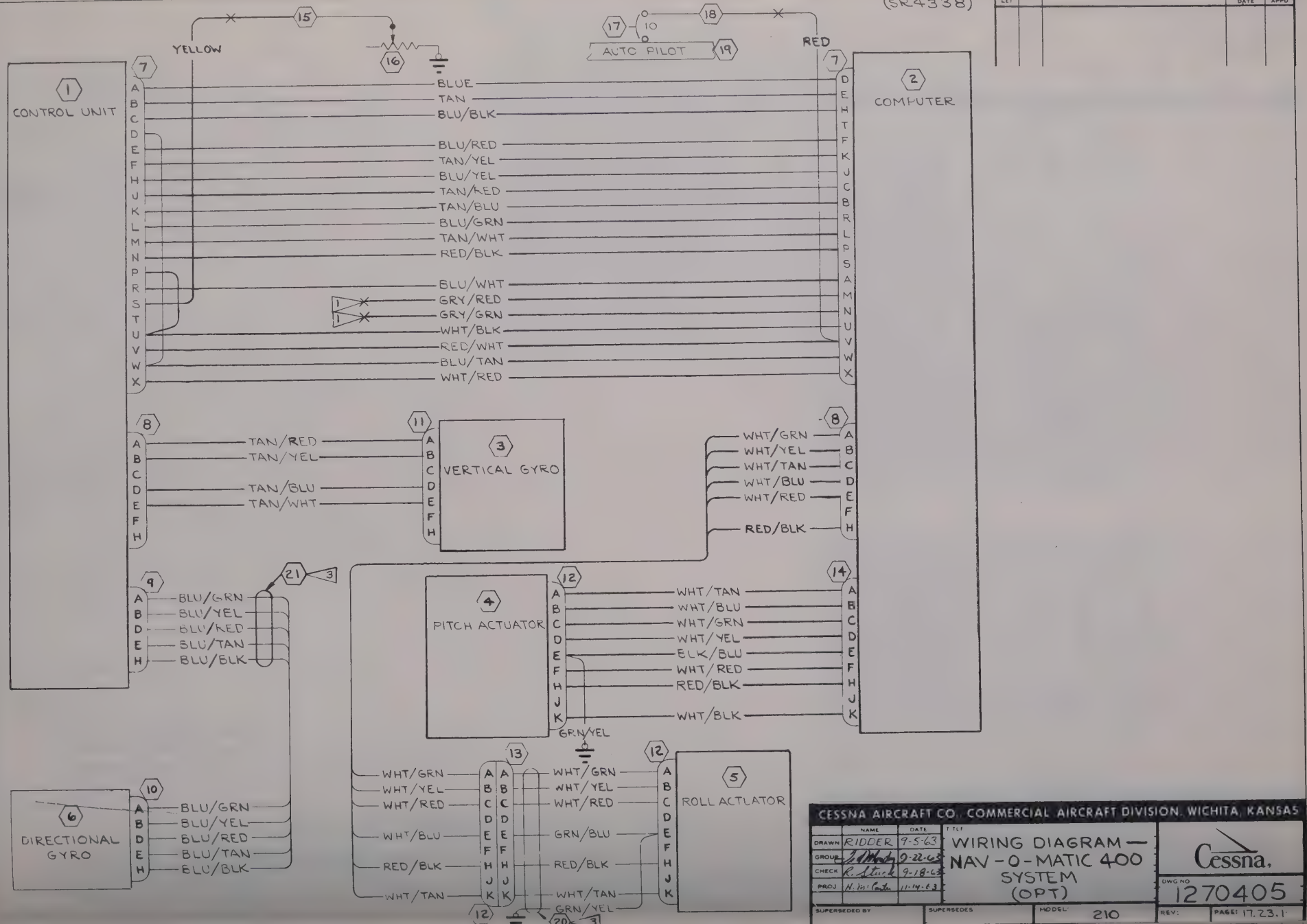


| CESSNA AIRCRAFT CO., COMMERCIAL AIRCRAFT DIVISION, WICHITA, KANSAS | | | | |
|---|---|---|---|---|
| | NAME | DATE | TITLE | |
| DRAWN | RIDDER | 9-5-63 | WIRING DIAGRAM — NAV-O-MATIC 400 SYSTEM (OPT) | Cessna. |
| GROUP | | 9-22-63 | | |
| CHECK | | 9-18-63 | | DWG NO 1270405 |
| PROJ | | 11-14-63 | | |
| SUPERSEDED BY | | SUPERSEDES | MODEL: 210 | REV: PAGE: 17.23.1 |

# TABLE OF CONTENTS


| PAGE NO. | TITLE | DATE ISSUED | REV |
|---|---|---|---|
| | **1965 & ON SERIALS<br>21058511 & ON<br>T210-0001 & ON** | | |
| 2.0.1 | Radio Audio, Power & Lighting | 6-28-65 | A |
| 2.3.1.0 | Wiring Diagram-Cessna Nav/Com 300R (ARC Type 514R, 515R) | 6-14-65 | A |
| 2.3.1.1 | Wiring Diagram-Cessna Nav/Com 300R (ARC Type 514R) | 6-14-65 | A |
| 2.4.1 | Wiring Diagram-Cessna Marker Beacon 300 (ARC Type 502B) | | |
| 2.6.1 | Wiring Diagram - Audio Selector Switches | | |
| 2.6.2 | Wiring Diagram-Omni Switch, Terminal Block & Muting Relay | | |
| 2.6.3 | W.D. -XMTR Selector Switch | | |
| 2.6.4 | W.D. -Typical Switching-Narco Mark 12 & ADF | 2-1-65 | |
| 2.6.5 | W.D.-Typical Switching-Partial "A", ISO Amp & ADF; H.F. Transceiver & Comm 300 | 2-22-65 | |
| 2.6.6 | W.D. -Trans. Selector Switch & Terminal Block | 12-7-65 | |
| 2.7.1.0 | W.D.-Cessna Nav/Com 300 (ARC Type 514A) | 6-14-65 | Inac. |
| 2.7.1.1 | W.D.-Cessna Nav/Com 300 (ARC Type 514A) | 6-14-65 | Inac. |
| 2.7.2 | Cessna Com 300 (ARC Type 524A) | 8-20-64 | |
| 2.8.1 | W.D.-Cessna Nav/Omni 300 (ARC Type 525A) | 12-7-64 | A |
| 2.10.1 | Cessna Transceiver 500 (ARC Type 302G) | 8-20-64 | |
| 2.12 | Cessna ADF 300 (ARC Type 521B) | 10-20-65 | A |
| 2.13.1.1 | Cessna Nav/Omni 500 (ARC Type 319G) | 9-11-64 | |
| 2.14.1.1 | Cessna Nav/Com 500 (ARC Type 317G) | 9-11-64 | |
| 2.15.1 | Cessna ADF 500 (ARC Type 318G) | 5-24-65 | A Inac. |
| 2.18.1.2 | W.D. -Pantronics DX10-D HF Trans. Installation | 11-17-64 | |
| 2.18.1.3 | W.D. -Pantronics DX10-D HF Trans. Installation | 11-17-64 | |
| 2.19 | King KA-10 Isolation Amplifier | 12-7-65 | Inac. |
| 2.20.1 | W.D. -King KN-60 DME | 12-7-64 | |
| 2.21.2 | W.D. -Pantronics DX10-DA | 4-27-65 | A |
| 2.21.3 | W.D. -Pantronics DX10-DA | 11-2-65 | C |
| 2.21.4 | W.D. -Pantronics DX10-DA | 11-2-65 | C |
| 2.24.1 | W.D. -King KX-150A or KX-150AE | 2-25-65 | A |
| 2.25.1 | W.D. -Narco Mark 12 with VOA-4, VOA-5, VOA-6 | 1-21-65 | |
| 2.26.1 | W.D. -Narco UGR-1A Glideslope with Narco Mark 12 & VOA-5 | 1-11-65 | |
| 2.27.1 | W.D. -King KY-95E | 2-1-65 | |
| 2.28 | Auxiliary Microphone Jack & Control Wheel Key | 7-12-65 | A |
| 2.30.1 | W.D. -Marker Beacon Cessna Nav/Omni (ARC Type 525A) | 5-27-65 | |
| 2.31.1 | W.D. -Cessna ADF 500 (Goniometer) (ARC 318G) | 10-20-65 | A |
| 2.32.1.0 | Cessna Nav/Comm 300 (ARC Type 516A) | 6-14-65 | |
| 2.32.1.1 | Cessna Nav/Com 300 | 6-14-65 | |

# TABLE OF CONTENTS


| PAGE NO. | TITLE | DATE ISSUED | REV |
|---|---|---|---|
| 2.33.1 | W.D. King KX-160E Nav/Com | 7-28-65 | |
| 2.34 | Wiring Diagram - Bendix ADF-T-12C | 8-30-65 | |
| 2.35.1 | W.D. -King KA-25C Audio Amplifier | 12-7-65 | |
| | DRAWING NUMBER 1270405 | | |
| 17.7 | Nav-O-Matic 200 & 300 Systems (Opt.) | 5-27-63 | Inac. |
| 17.7.1 | Nav-O-Matic 200 & 300 Systems (Opt.) | 11-17-64 | A |
| 17.23 | Nav-O-Matic 400 System (Opt.) | 11-14-63 | |
| 17.23.1 | Nav-O-Matic 400 System (Opt.) | 11-14-63 | |

NOTE: (SR 4455)

1. WIRES TO BE OF SUFFICIENT LENGTH TO ALLOW CONNECTION TO ALL POSSIBLE RADIO COMBINATIONS. TERMINALS TO BE ATTACHED TO WIRES AS REQD BY THE VARIOUS RADIO INSTALLATIONS.
2. WIRE MATERIAL PER S- 4LC.
3. S-1635-1 PIN & S-1637-1 HOUSING-CAP

| CHG LET | REVISION | BY / DATE | CHK / APPD |
|---|---|---|---|
| A | ADDED DETAIL "A" & GREEN WIRE, INACTIVATED GRN, BLK & GRN WIRES; ADD T210 TO MODEL (SR4839) | WJK 6-9-65 | |

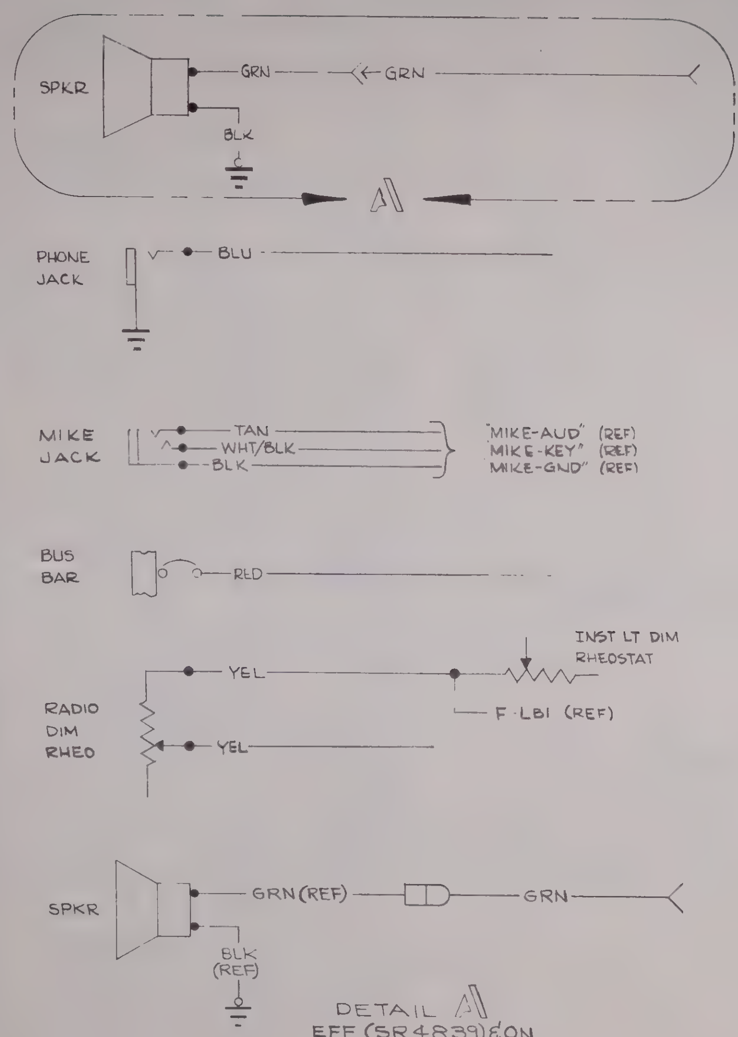


| | | | | | | |
|---|---|---|---|---|---|---|
| GREEN | 20 | -20-5 | 118 | S-341-2 | 3 (note) | (SR4839) & ON |
| BLACK | 22 | -22-0 | 8 | SOLDER | S-1367-1-8 | INACTIVE (SR4839) & ON |
| GREEN | 20 | -20-5 | 8 | SOLDER | S-341-2 | INACTIVE (SR4839) & ON |
| RED | 16 | -16-2 | 60 | 1 (note) | S-1367-2-6 | |
| YELLOW | 18 | -18-4 | 60 | | SOLDER | |
| YELLOW | 18 | -18-4 | | SOLDER | SOLDER | |
| BLACK | 22 | -22-0 | 72 | 1 (note) | SOLDER | |
| WHT/BLK | 22 | -22-9-0 | 72 | 1 (note) | SOLDER | |
| TAN | 22 | -22-10 | 72 | 1 (note) | SOLDER | |
| BLUE | 22 | -22-6 | 65 | 1 (note) | SOLDER | |
| GREEN | 20 | -20-5 | 118 | S-341-2 | S-341-2 | INACTIVE (SR4839) & ON |

2 WIRE TABLE

| ITEM NO | PART NO | DESCRIPTION | INSTALLED ON |
|---|---|---|---|

EQUIPMENT TABLE

CESSNA AIRCRAFT CO., COMMERCIAL AIRCRAFT DIVISION, WICHITA, KANSAS

WIRING DIAGRAM — RADIO SPEAKER, PHONE JACK, MIKE, LIGHT RHEO. & POWER CIRCUITS

DRAWN BALES 7-2-64

Cessna.

DWG NO 1270475

MODEL 210 & T210 — REV A — PAGE 2.01

FORM NO 80-161

(SR 4455)

| CHG LET | REVISION | BY / DATE | CHK / APPD |
|---|---|---|---|
| A | ADD ARC TYPE 515R TO TITLE. IN NOTE 3, 300R WAS 514R. (SR 4812) | GLW 5-28-65 | |

NOTES:

1. ON SINGLE NAV/COM 300R INSTL, RED/BLK WIRE (PIN K) IS CONNECTED TO RED/WHT WIRE (PIN S) WITH AN S-1370-1 SPLICE AND BLUE WIRE (PIN C) IS CONNECTED TO BLU/TAN WIRE (PIN R, D, J, N, OR T) WITH AN S-1370-1 SPLICE. WHEN THE NAV/COM 300R IS INSTALLED WITH OTHER RADIO UNITS, RED/WHT WIRE CONNECTS TO CKT BKR AS SHOWN & RED/BLK WIRE IS CUT OFF AT CONNECTOR; BLUE WIRE CONNECTS TO WIPER OF A SPKR-PHONE SWITCH & BLU/TAN WIRE CONNECTS TO SPKR TERMINAL OF SPKR-PHONE SWITCH.
2. S-1557-1 CAP REPLACED WITH S-1367-1-8 TERMINAL WHEN COMBINED WITH OTHER RADIOS.
3. FOR DUAL 300R INSTALLATION, REF PAGE 2.3.1.1.
4. WIRE MATERIAL PER S-1460 EXCEPT AS NOTED.

(NOTES CONT. ON 2.3.1.1)

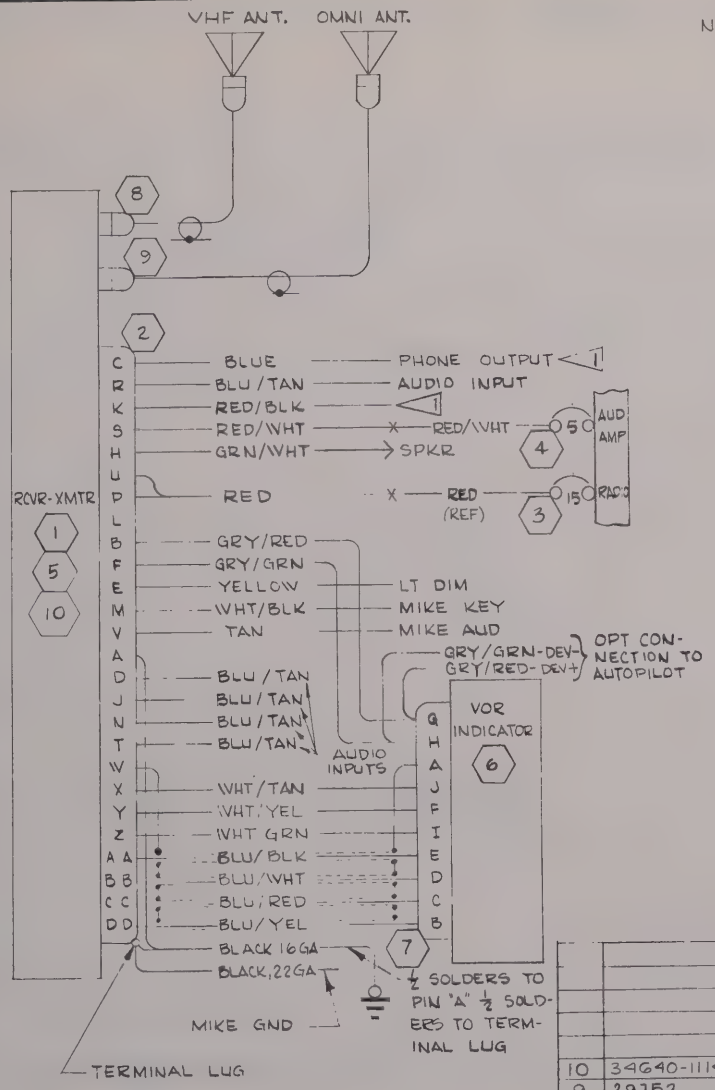


| WIRE CODE NO | GA | MATERIAL | LG | TERMINALS | | SERIALS |
|---|---|---|---|---|---|---|
| RED/WHT | 18 | -18-2-9 | | S-1367-1-8 | | |
| BLU/YEL | 22 | S-1461-22-6-4 | | SOLDER | SOLDER | |
| BLU/RED | 22 | S-1461-22-6-2 | | | | |
| BLU/WHT | 22 | S-1461-22-6-9 | | | | |
| BLU/BLK | 22 | S-1461-22-6-0 | | | | |
| WHT/GRN | 22 | -22-9-5 | | | | |
| WHT/YEL | 22 | -22-9-4 | | | | |
| WHT/TAN | 22 | -22-9-10 | | | SOLDER | |
| BLACK | 16 | -16-0 | | | S-1367-2-8 | |
| WHT/BLK | 22 | -22-9-0 | | | | |
| GRY/GRN | 22 | -22-8-5 | | | S-1557-1 | |
| GRY/GRN | 22 | -22-8-5 | | | SOLDER | |
| GRY/RED | 22 | -22-8-2 | | | S-1557-1 | |
| GRY/RED | 22 | -22-8-2 | | | SOLDER | |
| BLU/TAN | 22 | -22-6-10 | | | S-1557-1 | 2 |
| BLU/TAN | 22 | -22-6-10 | | | | 2 |
| BLU/TAN | 22 | -22-6-10 | | | | 2 |
| BLU/TAN | 22 | -22-6-10 | | | | 2 |
| BLU/TAN | 22 | -22-6-10 | | | S-1557-1 | 2 |
| RED/WHT | 18 | -18-2-9 | | | S-1370-1 | |
| RED/BLK | 18 | -18-2-0 | | | | |
| BLACK | 22 | -22-0 | | | | |
| TAN | 22 | -22-10 | | | | |
| BLUE | 22 | -22-6 | | | | |
| RED | 16 | -16-2 | | | S-1370-2 | |
| YELLOW | 18 | -18-4 | | | | |
| GRN/WHT | 20 | -20-5-9 | | SOLDER | S-341-2 | |

4 WIRE TABLE

| ITEM NO | PART NO | DESCRIPTION | INSTALLED ON |
|---|---|---|---|
| 10 | 34640-1114 | RCVR/XMTR (ARC) | |
| 9 | 29752 | CONNECTOR (ARC) | |
| 8 | 29753 | CONNECTOR (ARC) | |
| 7 | 32604 | CONNECTOR (ARC) | |
| 6 | 31640 | INDICATOR | (ARC) |
| 5 | 32580-1614 | RCVR/XMTR 360 CH EXP | (ARC) |
| 4 | S-1360-5 | CIRCUIT BREAKER | |
| 3 | S-1360-15 | CIRCUIT BREAKER | |
| 2 | 29747-0026 | CONNECTOR (ARC) | |
| 1 | 32580-1114 | RCVR/XMTR (360 CH) | (ARC) |

EQUIPMENT TABLE

CESSNA AIRCRAFT CO., COMMERCIAL AIRCRAFT DIVISION, WICHITA, KANSAS

| | NAME | DATE |
|---|---|---|
| DRAWN | BALES | 7-2-64 |
| GROUP | R.E. MOORE | 8-15 ltr |
| CHECK | | |
| PROJ | | |

TITLE: WIRING DIAGRAM — CESSNA NAV/COM 300R (ARC TYPE 515R) (ARC TYPE 514R)

Cessna.

DWG NO 1270475

REV A

PAGE 2.3.1.0

SUPERSEDED BY

SUPERSEDES 1270405 PAGE 11.24

MODEL 210, T210

FORM NO 80-161

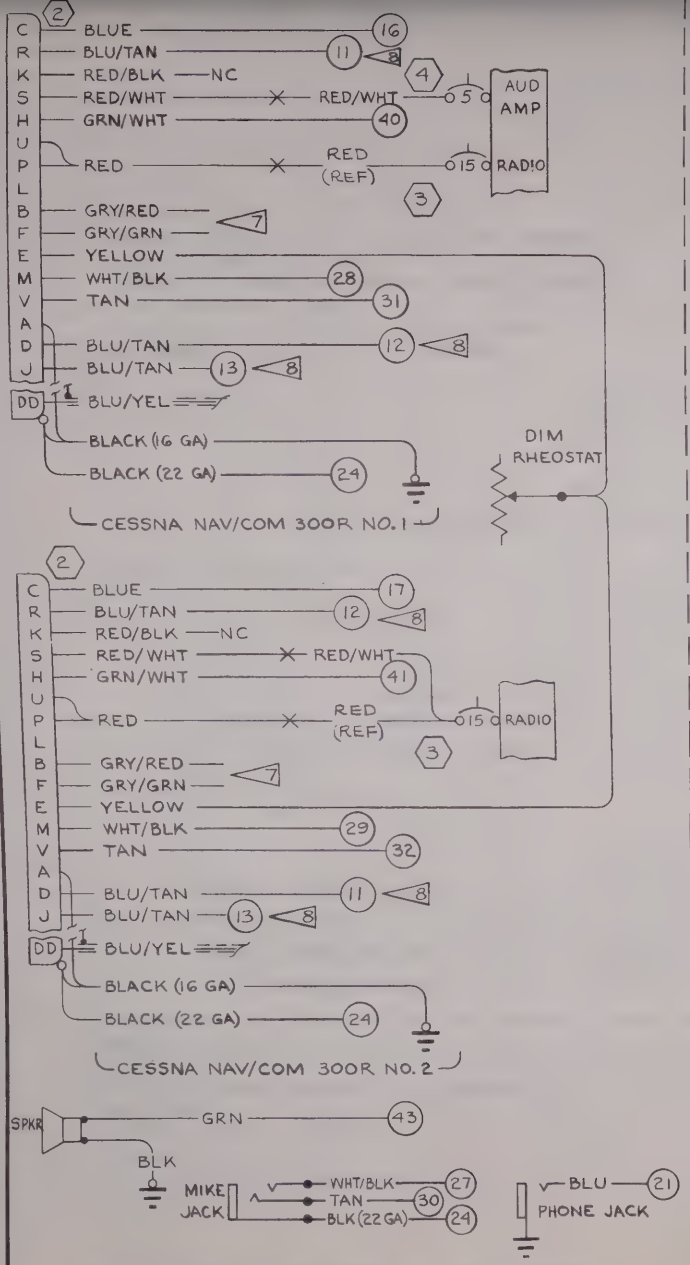


TYPICAL INTERCONNECTION OF DUAL CESSNA NAV/COM 300R SYSTEMS

NOTES CONTINUED: (SR 4455)

5. CIRCLED NUMBERS ◯ REFER TO TERMINALS ON TERMINAL BOARD ASSY REF PAGES 2.6.1, 2.6.2, 2.6.3.
6. CESSNA NAV/COM 300R AMPLIFIERS ARE OPERATED "ALWAYS HOT". SPEAKER OUTPUTS FROM EACH SYSTEM DRIVE EITHER A 5 OHM, 10 WATT DUMMY LOAD OR THE SHIP'S SPEAKER AS DETERMINED BY THE TRANSMITTER SELECTED (REF PAGE 2.6.3)
7. WHEN AN OPTIONAL NAV-O-MATIC AUTOPILOT WITH OMNI COUPLER IS COMBINED WITH A CESSNA NAV/COM 300R, THE GRY/RED WIRE CONNECTS TO DEV + CIRCUIT & THE GRY/GRN WIRE CONNECTS TO DEV - CIRCUIT.
8. THE (5) BLU/TAN WIRES (150 AMP INPUTS) FROM EACH NAV/COM SET TO BE CONNECTED TO TERMINALS 11 THRU 15 ON TERMINAL BOARD IN ANY SEQUENCE. CAUTION: DO NOT CONNECT (2) BLU/TAN WIRES FROM SAME SET TO SAME TERMINAL!

| CHG LET | REVISION | BY DATE | CHK APPD |
|---|---|---|---|
| | (SEE PAGE 2.3.1.0) | | |

| ITEM NO | PART NO. | DESCRIPTION | INSTALLED ON |
|---|---|---|---|

EQUIPMENT TABLE

| WIRE CODE NO. | GA | MATERIAL | LG | TERMINALS | | SERIALS |
|---|---|---|---|---|---|---|
| | | | | | | |

WIRE TABLE

CESSNA AIRCRAFT CO. COMMERCIAL AIRCRAFT DIVISION, WICHITA, KANSAS

| | NAME | DATE |
|---|---|---|
| DRAWN | G WOOD | 3-10-69 |
| GROUP | [illegible] | 8-5-64 |
| CHECK | [illegible] | 7-16-69 |
| PROJ | [illegible] | 8-5-69 |

TITLE: WIRING DIAGRAM — CESSNA NAV/COM 300R (ARC TYPE 514R) (ARC TYPE 515R)

Cessna.

DWG NO: 1270475

| SUPERSEDED BY | SUPERSEDES | MODELS | REV | PAGE |
|---|---|---|---|---|
| | | 210, T210 | A | 2.3.1.1 |

FORM NO. 80-16

(SR 4455)

| CHG LET | REVISION | BY DATE | CHK APPD |
|---|---|---|---|
| | | | |

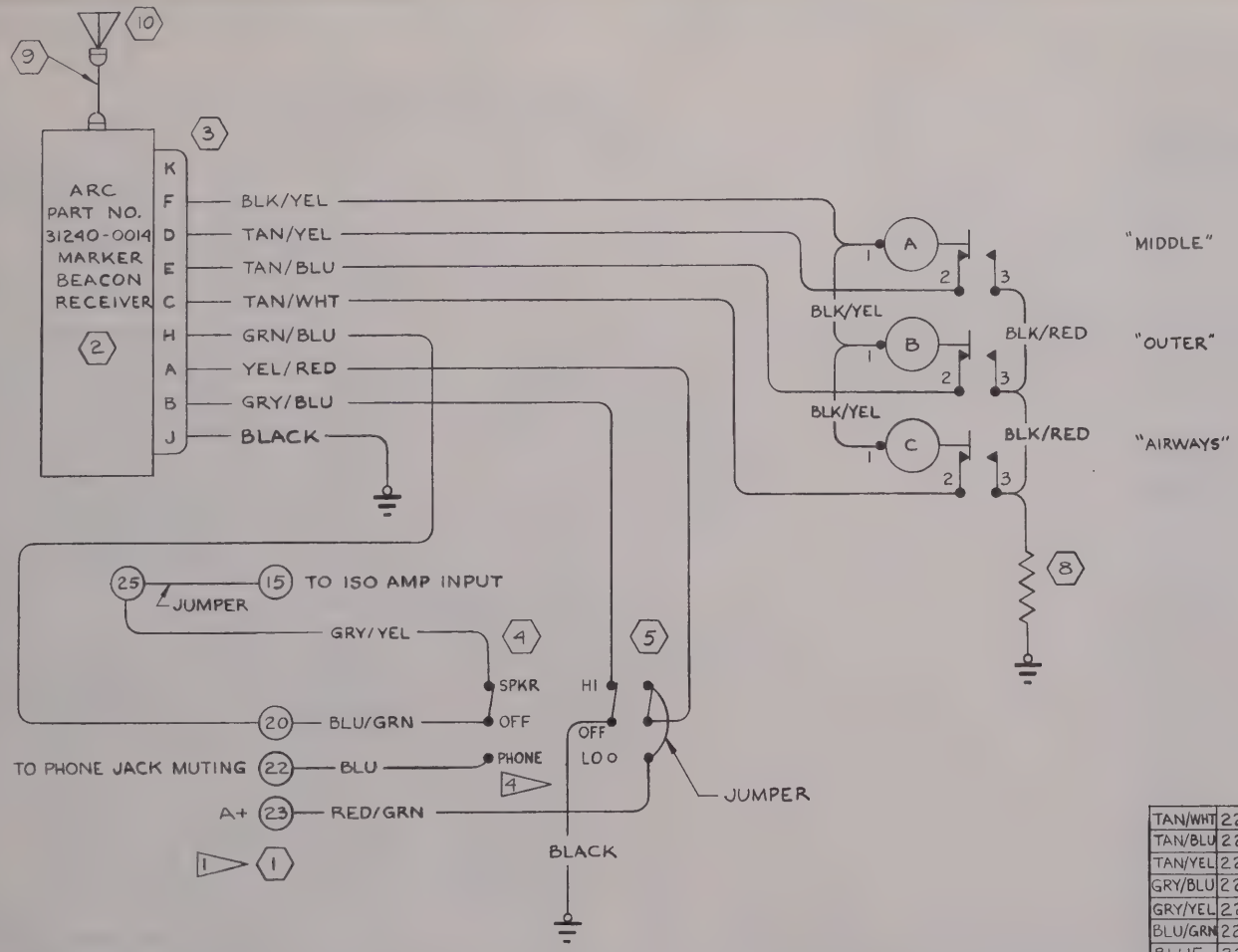


NOTES:

1. NUMBERS IN CIRCLES ARE NUMBERS ON 0770714-1 TERMINAL BLOCK ASSY.
2. WIRE MATERIAL PER S-1460.
3. TERMINAL BLOCK NUMBERS TO BE STAMPED ON WIRE PER CES-1015.
4. "PHONE" & "LO" FUNCTION TO BE ON KEYWAY SIDE OF SWITCH.

| ITEM NO | PART NO | DESCRIPTION | INSTALLED ON |
|---|---|---|---|
| 10 | -611 | MARKER BCN ANT. | |
| 9 | -205 | CABLE ASSY | |
| 8 | 40Ω, 3 WATT | RESISTOR (OM) | |
| 7 | | | |
| 6 | | | |
| 5 | MST-205P | SWITCH (AELM) | |
| 4 | MST-105E | SWITCH (AELM) | |
| 3 | 28371-009 | PLUG (ARC) | |
| 2 | 31240-0014 | MKR BCN RCVR | (ARC) |
| 1 | 0770714-1 | TERM. BLOCK ASSY | |

EQUIPMENT TABLE

| WIRE CODE NO. | GA | MATERIAL | LG | TERMINALS | | SERIALS |
|---|---|---|---|---|---|---|
| TAN/WHT | 22 | -22-10-9 | | SOLDER | SOLDER | |
| TAN/BLU | 22 | -22-10-6 | | | SOLDER | |
| TAN/YEL | 22 | -22-10-4 | | | SOLDER | |
| GRY/BLU | 22 | -22-8-6 | | | SOLDER | |
| GRY/YEL | 22 | -22-8-4 | | | S-1367-1-8 | |
| BLU/GRN | 22 | -22-6-5 | | | S-1367-1-8 | |
| BLUE | 22 | -22-6 | | | S-1367-1-8 | |
| GRN/BLU | 20 | -20-5-6 | | | SOLDER | |
| YEL/RED | 20 | -20-4-2 | | | SOLDER | |
| RED/GRN | 20 | -20-2-5 | | | S-1367-1-8 | |
| BLACK | 22 | -22-0 | | | S-1367-1-8 | |
| BLACK | 22 | -22-0 | | | S-1367-1-8 | |
| BLK/YEL | 22 | -22-0-9 | | SOLDER | SOLDER | |

2 WIRE TABLE

CESSNA AIRCRAFT CO., COMMERCIAL AIRCRAFT DIVISION, WICHITA, KANSAS

| | NAME | DATE |
|---|---|---|
| DRAWN | G WOOD | 2-25-64 |
| GROUP | | 3-5-64 |
| CHECK | | 3-10-64 |
| PROJ | | 3-5-64 |

TITLE: WIRING DIAGRAM — CESSNA MARKER BEACON 300 (OPT) (ARC TYPE 502B)

Cessna.

DWG NO 1270475

REV

PAGE 2.4.1

SUPERSEDED BY

SUPERSEDES

MODEL 210

FORM NO. 80-161

(SR 4455)

| CHG LET | REVISION | BY DATE | CHK APPD |
|---|---|---|---|
| | | | |

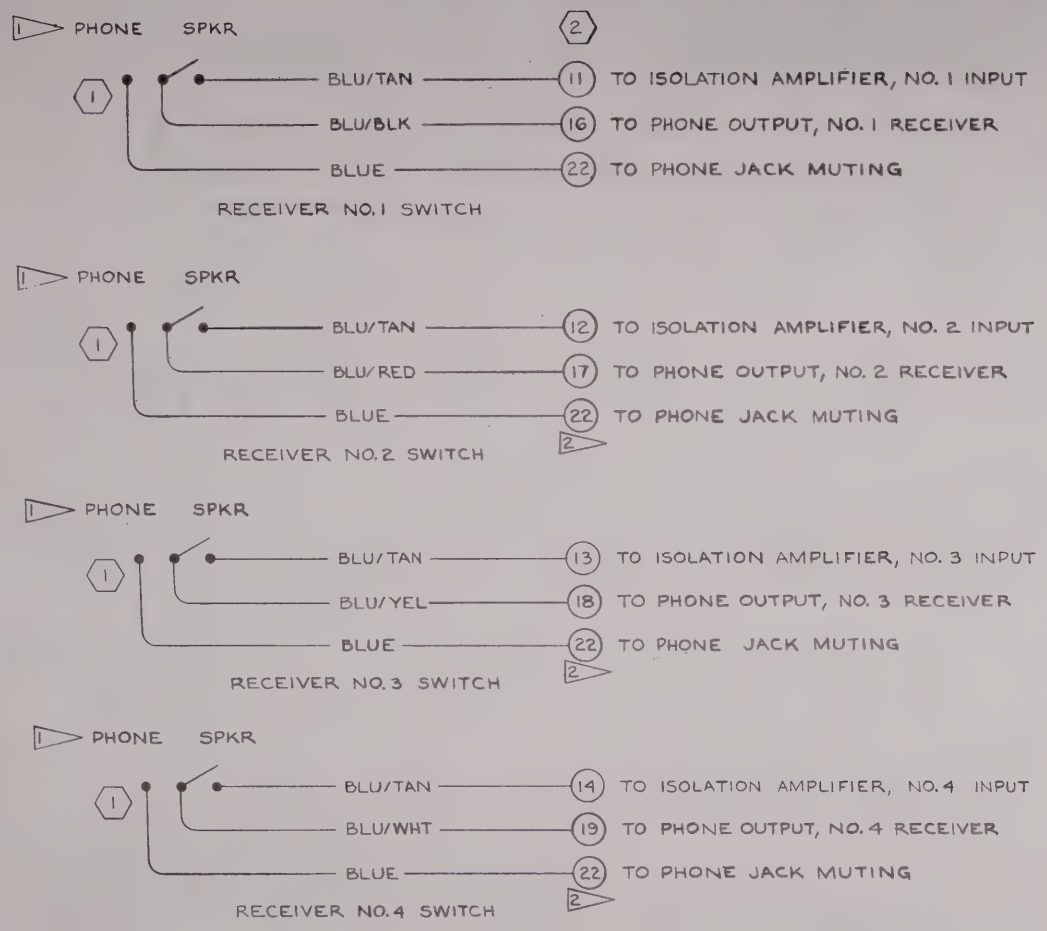


NOTES:
1. "PHONE" FUNCTION ON KEYWAY SIDE OF SWITCH.
2. PHONE TERMINAL MAY BE JUMPERED TO ADJACENT AUDIO SWITCH PHONE TERMINAL INSTEAD OF BEING ROUTED TO TERMINAL BLOCK.
3. WIRE MATERIAL PER S-1460.
4. TERMINAL BLOCK NUMBERS TO BE STAMPED ON WIRE PER CES-1015.

| WIRE CODE NO | GA | MATERIAL | LG | TERMINALS | | SERIALS |
|---|---|---|---|---|---|---|
| BLU/TAN | 22 | -22-G-10 | | SOLDER | S-1367-1-8 | |
| BLU/TAN | 22 | -22-G-10 | | | | |
| BLU/TAN | 22 | -22-G-10 | | | | |
| BLU/TAN | 22 | -22-G-10 | | | | |
| BLU/WHT | 22 | -22-G-9 | | | | |
| BLU/YEL | 22 | -22-G-4 | | | | |
| BLU/RED | 22 | -22-G-2 | | | | |
| BLU/BLK | 22 | -22-G-0 | | | | |
| BLUE | 22 | -22-G | | | | |
| BLUE | 22 | -22-G | | | | |
| BLUE | 22 | -22-G | | | | |
| BLUE | 22 | -22-G | | SOLDER | S-1367-1-8 | |

3 WIRE TABLE

| ITEM NO | PART NO. | DESCRIPTION | INSTALLED ON |
|---|---|---|---|
| 2 | 0770714-1 | TERM. BLOCK ASSY | |
| 1 | MST-105D | SWITCH (AELM) | |

EQUIPMENT TABLE

CESSNA AIRCRAFT CO. COMMERCIAL AIRCRAFT DIVISION, WICHITA, KANSAS

| | NAME | DATE |
|---|---|---|
| DRAWN | G WOOD | 2-21-64 |
| GROUP | [illegible] | 8-5-64 |
| CHECK | R. Stuck | 7-10-64 |
| PROJ | N. McCarter | 8-5-64 |

TITLE: WIRING DIAGRAM — AUDIO SELECTOR SWITCHES

Cessna.

DWG NO. 1270475

| SUPERSEDED BY | SUPERSEDES | MODEL: | REV: | PAGE: |
|---|---|---|---|---|
| | | 210 | | 2.6.1 |

FORM NO. 80-161

(SR 4455)

| CHG LET | REVISION | BY DATE | CHK APPD |
|---|---|---|---|
| | | | |

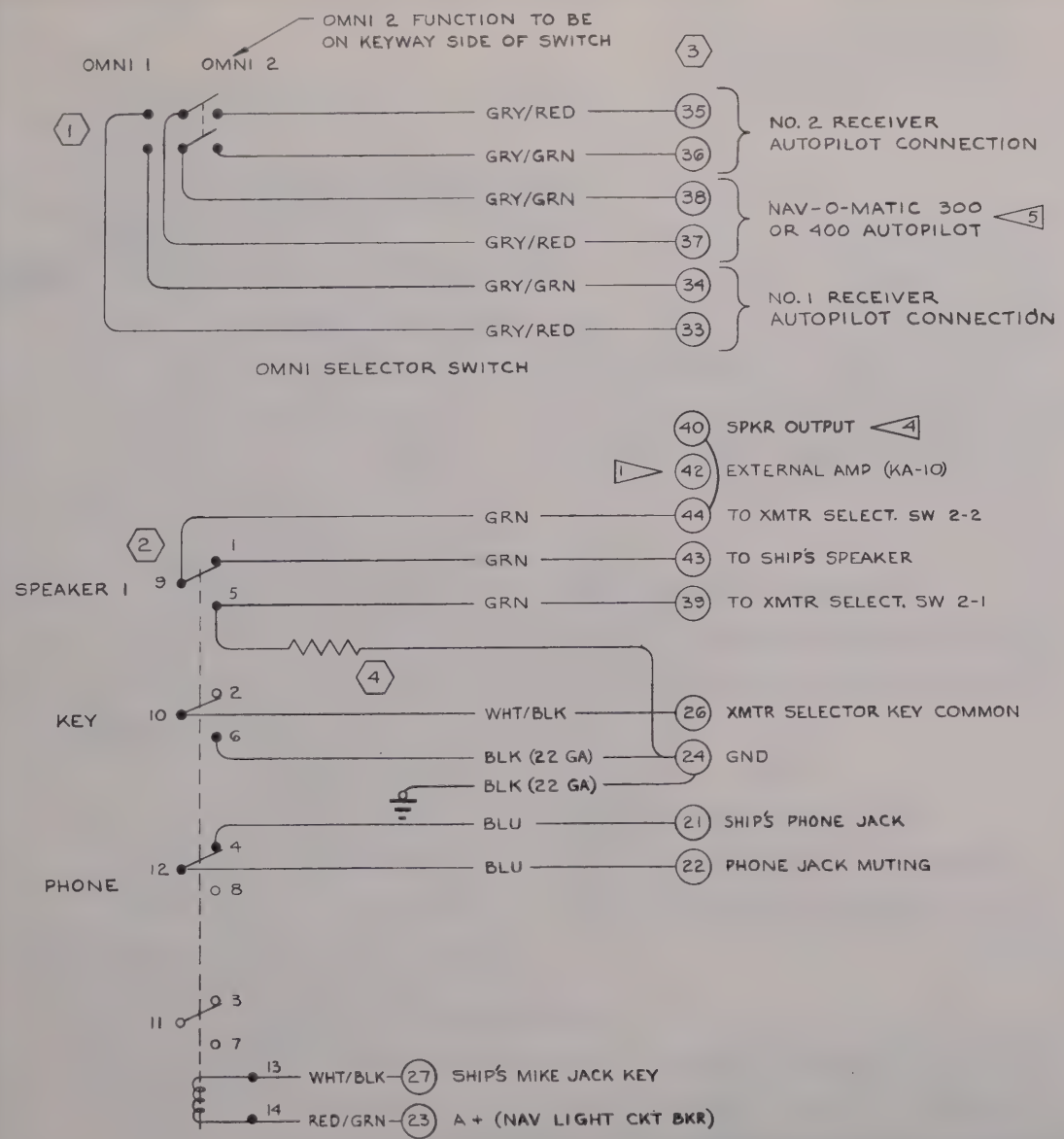


INTERNAL WIRING OF TERMINAL BOARD & MUTING RELAY

NOTES:

1. JUMPER BETWEEN (42) & (44) TO COMPLETE CIRCUIT FOR KA-10 AMPLIFIER.
2. WIRE MATL PER S-1460.
3. TERMINAL BLOCK NUMBERS TO BE STAMPED ON WIRE PER CES-1015.
4. WHEN A SINGLE TRANSCEIVER IS INSTALLED WITH ANY RECEIVING UNIT, THE SPKR OUTPUT OF THE TRANSCEIVER CONNECTS TO TERMINAL (40) & A JUMPER IS REQD BETWEEN (40) & (44). JUMPERS ARE ALSO REQD BETWEEN (26) & (28) FOR MIKE KEYING AND BETWEEN (30) & (31) FOR MIKE AUDIO CIRCUITS.
5. WHEN SINGLE OMNI INSTALLATION IS MADE WITH AN AUTOPILOT, JUMPERS ARE REQD BETWEEN (33) & (37) AND BETWEEN (34) & (38).

| WIRE CODE NO. | GA | MATERIAL | LG | TERMINALS | | SERIALS |
|---|---|---|---|---|---|---|
| BLACK | 22 | -22-0 | | S-1367-1-8 | S-1367-1-8 | |
| WHT/BLK | 22 | -22-9-0 | | SOLDER | S-1367-1-8 | |
| WHT/BLK | 22 | -22-9-0 | | | | |
| GRY/RED | 22 | -22-8-2 | | | | |
| GRY/RED | 22 | -22-8-2 | | | | |
| GRY/RED | 22 | -22-8-2 | | | | |
| GRY/GRN | 22 | -22-8-5 | | | | |
| GRY/GRN | 22 | -22-8-5 | | | | |
| GRY/GRN | 22 | -22-8-5 | | | | |
| BLUE | 22 | -22-6 | | | | |
| BLUE | 22 | -22-6 | | | | |
| GRN | 20 | -20-5 | | | | |
| GRN | 20 | -20-5 | | | | |
| GRN | 20 | -20-5 | | | | |
| BLACK | 22 | -22-0 | | | | |
| RED/GRN | 20 | -20-2-5 | | SOLDER | S-1367-1-8 | |

2 WIRE TABLE

| ITEM NO. | PART NO. | DESCRIPTION | INSTALLED ON |
|---|---|---|---|
| 4 | 5 OHM 10 WATT AXIAL LEAD | RESISTOR (OM) | |
| 3 | 0770714-1 | TERM. BLOCK ASSY | |
| 2 | KHP17D11 | RELAY (PBR) | |
| 1 | MST-205N | SWITCH (AELM) | |

EQUIPMENT TABLE

CESSNA AIRCRAFT CO. COMMERCIAL AIRCRAFT DIVISION, WICHITA, KANSAS

| | NAME | DATE |
|---|---|---|
| DRAWN | G WOOD | 2-22-64 |
| GROUP | | 8-5-64 |
| CHECK | | 7-10-64 |
| PROJ | | 8-5-64 |

TITLE: WIRING DIAGRAM — OMNI SWITCH, TERMINAL BLOCK & MUTING RELAY

Cessna.

DWG NO. 1270475

| SUPERSEDED BY | SUPERSEDES | MODEL | REV | PAGE |
|---|---|---|---|---|
| | | 210 | | 2.6.2 |

FORM NO. 80-151

(SR 4455)

| CHG LET | REVISION | BY DATE | CHK APPD |
|---|---|---|---|
| | | | |

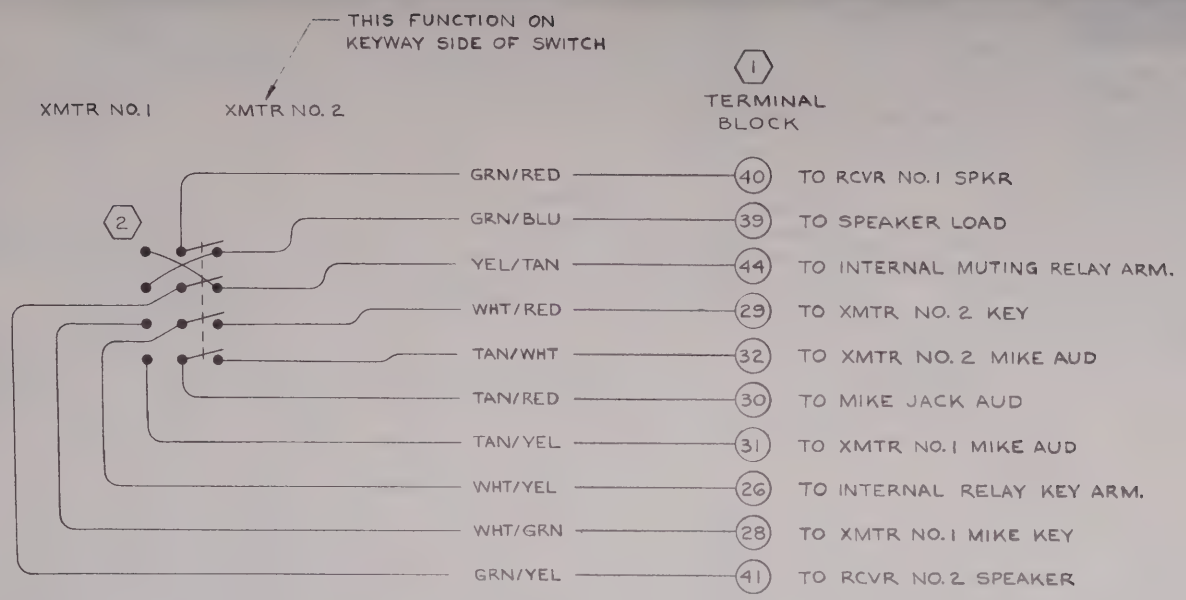


NOTES:
1. ALL WIRE MATL PER S-1460.
2. TERMINAL BLOCK NUMBERS TO BE STAMPED ON WIRE PER CES-1015.

| WIRE CODE NO | GA | MATERIAL | LG | TERMINALS | | SERIALS |
|---|---|---|---|---|---|---|
| TAN/WHT | 22 | -22-10-9 | | SOLDER | S-1367-1-8 | |
| TAN/YEL | 22 | -22-10-4 | | | | |
| TAN/RED | 22 | -22-10-2 | | | | |
| WHT/GRN | 22 | -22-9-5 | | | | |
| WHT/YEL | 22 | -22-9-4 | | | | |
| WHT/RED | 22 | -22-9-2 | | | | |
| GRN/BLU | 20 | -20-5-6 | | | | |
| GRN/YEL | 20 | -20-5-4 | | | | |
| GRN/RED | 20 | -20-5-2 | | | | |
| YEL/TAN | 20 | -20-4-10 | | SOLDER | S-1367-1-8 | |

1 WIRE TABLE

| | PART NO | DESCRIPTION | INSTALLED ON |
|---|---|---|---|
| 2 | MST 405N | SWITCH (AELM) | |
| 1 | 0770714-1 | TERM. BLOCK ASSY | |

EQUIPMENT TABLE

CESSNA AIRCRAFT CO. COMMERCIAL AIRCRAFT DIVISION, WICHITA, KANSAS

| | NAME | DATE |
|---|---|---|
| DRAWN | G WOOD | 2-20-64 |
| GROUP | [illegible] | [illegible] |
| CHECK | R Stuck | 7-10-64 |
| PROJ | H. McCarter | 8-5-64 |

TITLE: WIRING DIAGRAM — TRANSMITTER SELECTOR SWITCH

Cessna.

DWG NO. 1270475

| SUPERSEDES | SUPERSEDES | MODEL | REV | PAGE |
|---|---|---|---|---|
| | | 210 | | 2.6.3 |

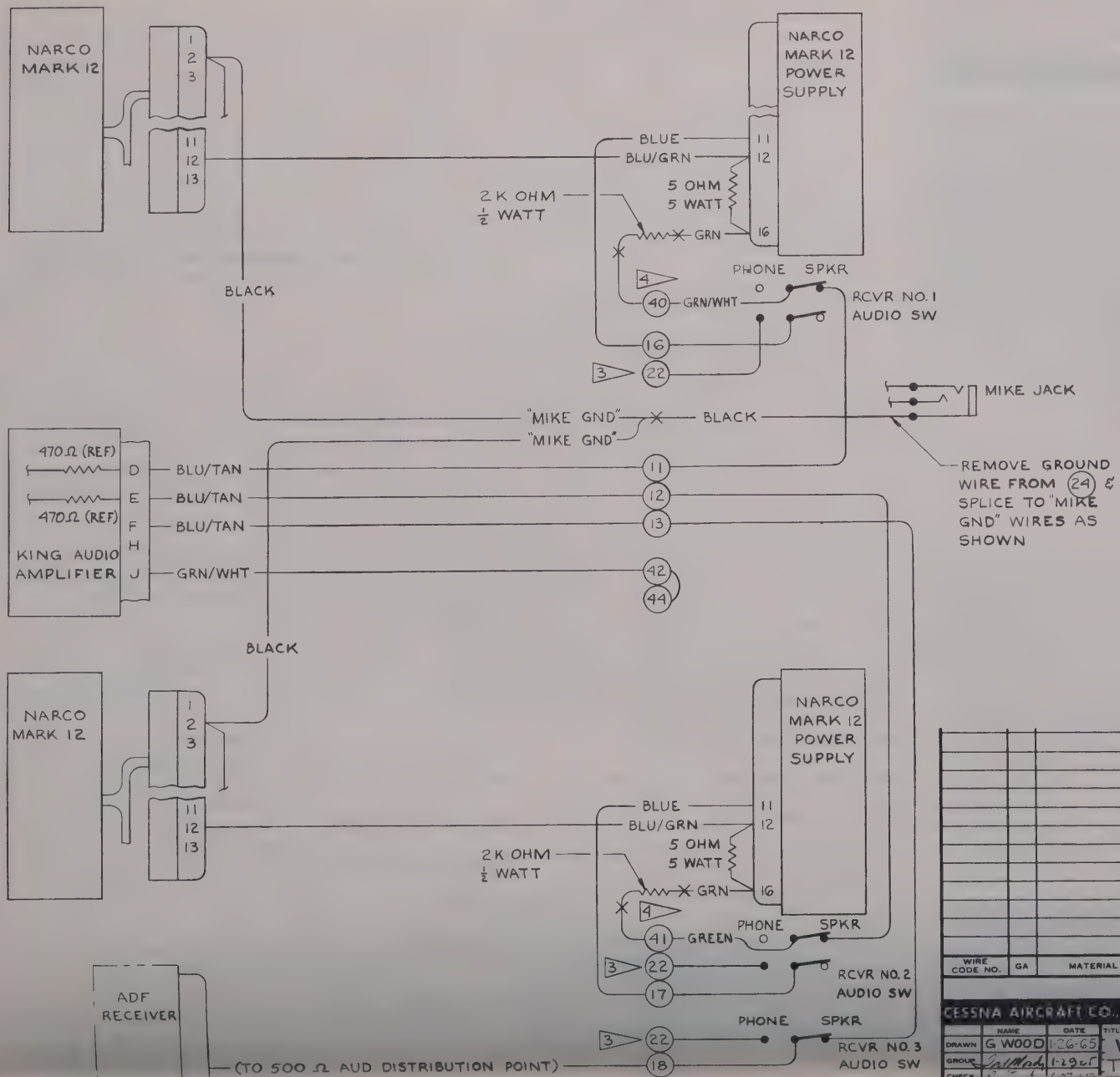


| CHG LET | REVISION | BY DATE | CHK APPD |
|---|---|---|---|
| | | | |

NOTES:

1. ◯ ARE NUMBERS ON TERMINAL BOARD.
2. ON SINGLE MARK 12 & ADF INSTL, AUDIO SW NO. 3 WILL NOT BE USED.

3 PHONE TERMINAL MAY BE JUMPERED TO ADJACENT AUDIO SWITCH PHONE TERMINAL INSTEAD OF BEING ROUTED TO TERMINAL BOARD.

4 REMOVE EXISTING WIRES FROM (40) & (41) (GRN/RED & GRN/YEL RESPECTIVELY) & TERMINATE WITH S-1557-1 CAP.

5. THIS IS A REFERENCE PRINT ONLY.

| WIRE CODE NO. | GA | MATERIAL | LG | TERMINALS | | SERIALS |
|---|---|---|---|---|---|---|
| | | | | | | |

WIRE TABLE

CESSNA AIRCRAFT CO., COMMERCIAL AIRCRAFT DIVISION, WICHITA KANSAS

| | NAME | DATE |
|---|---|---|
| DRAWN | G WOOD | 1-26-65 |
| GROUP | | 1-29-65 |
| CHECK | | |

TITLE: WIRING DIAGRAM— TYPICAL SWITCHING-

Cessna

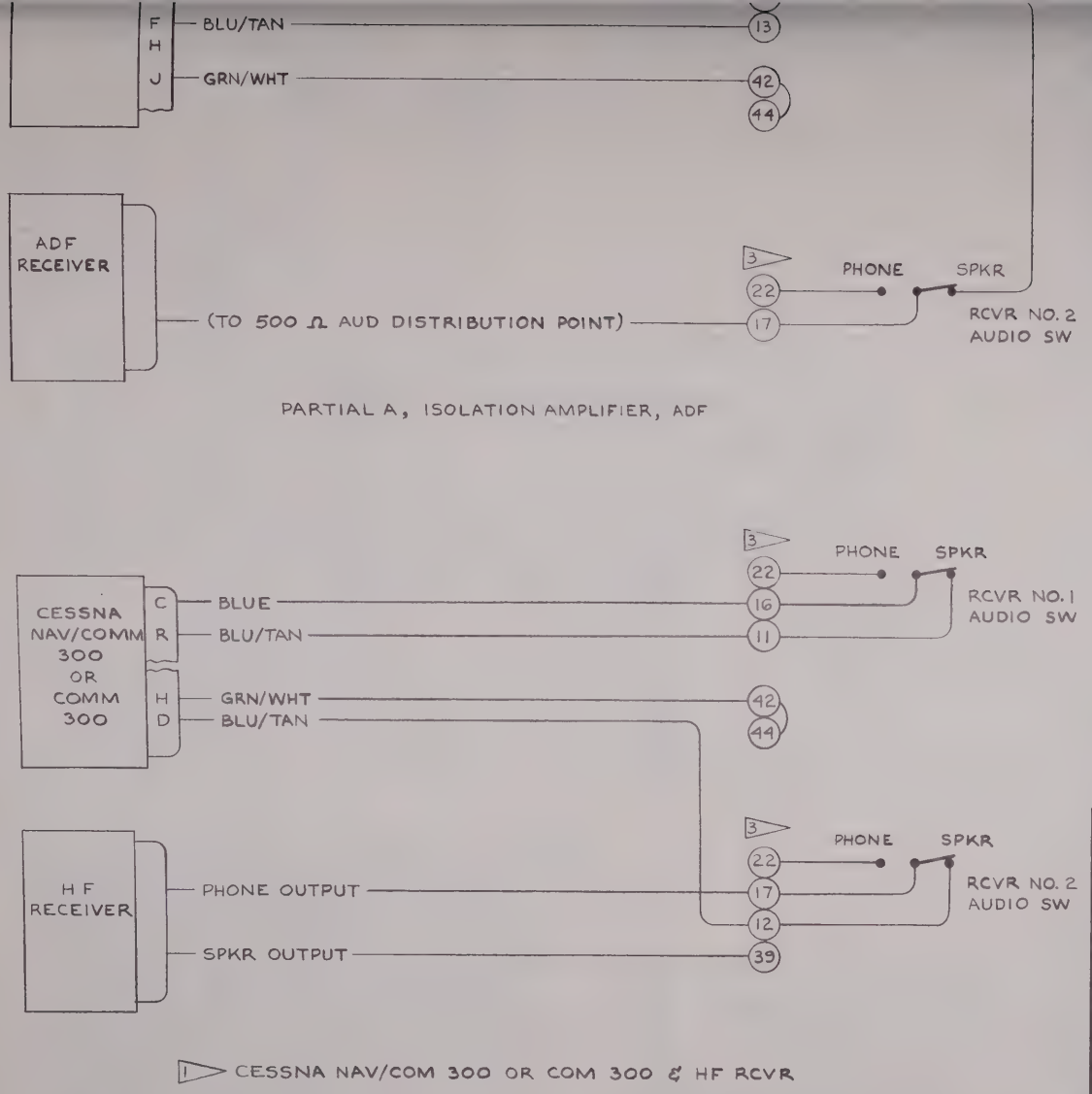


PARTIAL A, ISOLATION AMPLIFIER, ADF

NOTES:

1. SPKR OUTPUT OF RCVR'S WILL NOT CONNECT TO (40) OR (41) ON TERMINAL BOARD.
2. ( ) ARE NUMBERS ON TERMINAL BOARD.
3. PHONE TERMINAL MAY BE JUMPERED TO ADJACENT AUDIO SWITCH PHONE TERMINAL INSTEAD OF BEING ROUTED TO TERMINAL BOARD.
4. THIS IS A REF PRINT ONLY.

1 CESSNA NAV/COM 300 OR COM 300 & HF RCVR

| WIRE CODE NO. | GA | MATERIAL | LG | TERMINALS | | SERIALS |
|---|---|---|---|---|---|---|
| | | | | | | |

WIRE TABLE

| ITEM NO | PART NO. | DESCRIPTION | INSTALLED ON |
|---|---|---|---|
| | | | |

EQUIPMENT TABLE

CESSNA AIRCRAFT CO., COMMERCIAL AIRCRAFT DIVISION, WICHITA, KANSAS

| | NAME | DATE |
|---|---|---|
| DRAWN | G WOOD | 2-15-65 |
| GROUP | [illegible] | 2-16-65 |
| CHECK | [illegible] | 2-16-65 |
| PROJ | W. McCarter | 2-19-65 |
| | [illegible] | |

TITLE: WIRING DIAGRAM— TYPICAL SWITCHING - PARTIAL "A", ISO AMP & ADF; H F TRANSCEIVER & COMM 300

Cessna.

DWG NO: 1270475

SUPERSEDED BY: | SUPERSEDES: | MODEL: 210 | REV: | PAGE: 2.6.5

FORM NO 80-1614

(SR4938)

| CHG LET | REVISION | BY DATE | CHK APPD |
|---|---|---|---|
| | | | |

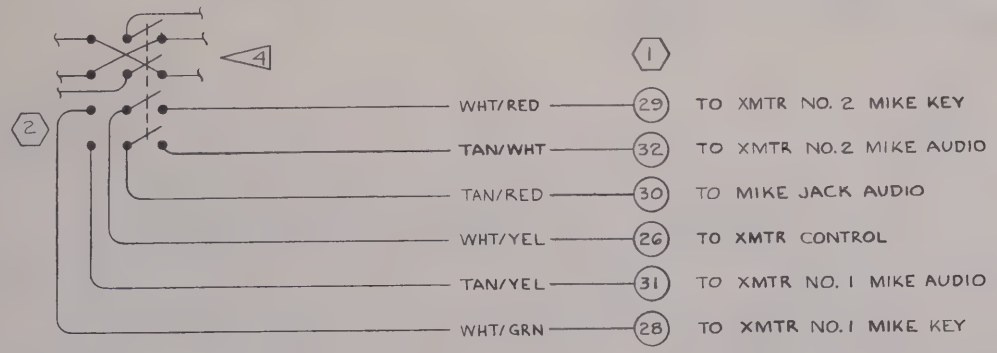


NOTE:

1. INFORMATION ON THIS PAGE IS TO BE USED ONLY WITH KING KA-25C AUDIO AMPLIFIER.
2. TERMINAL BLOCK NUMBERS TO BE STAMPED ON WIRE PER CES-1015.
3. WHEN A SINGLE TRANSCEIVER IS INSTALLED WITH ANY RECEIVING UNIT, JUMPERS ARE REQD BETWEEN (26) & (28) FOR MIKE KEYING, AND BETWEEN (30) & (31) FOR MIKE AUDIO.

4 > REF PAGE 2.6.3 FOR COMPLETE SWITCH WIRING. TERMINALS OF WIRES NOT USED ARE TO BE COVERED WITH VINYL SLEEVING & WIRES TO BE TIED INTO WIRE BUNDLE.

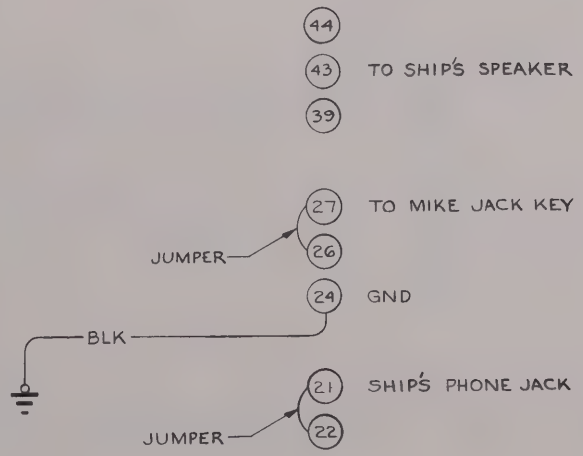


| WIRE CODE NO. | GA | MATERIAL | LG | TERMINALS | | SERIALS |
|---|---|---|---|---|---|---|
| TAN/YEL | 22 | S-1460-22-10-9 | | SOLDER | S-1367-1-8 | |
| TAN/WHT | 22 | -22-10-5 | | | | |
| TAN/RED | 22 | -22-10-2 | | | | |
| WHT/YEL | 22 | -22-9-9 | | | | |
| WHT/GRN | 22 | -22-9-5 | | | | |
| WHT/RED | 22 | -22-9-2 | | SOLDER | | |
| BLACK | 22 | S-1460-22-0 | | S-1367-1-8 | S-1367-1-8 | |

WIRE TABLE

CESSNA AIRCRAFT CO. COMMERCIAL AIRCRAFT DIVISION WICHITA KANSAS

| | NAME | DATE |
|---|---|---|
| DRAWN | G WOOD | 11-24-65 |
| GROUP | N. Wise | 11-29-65 |

TITLE: WIRING DIAGRAM— TRANSMITTER

Cessna

(SR 4455)

| CHG LET | REVISION | BY DATE | CHK APPD |
|---|---|---|---|
| | | | |

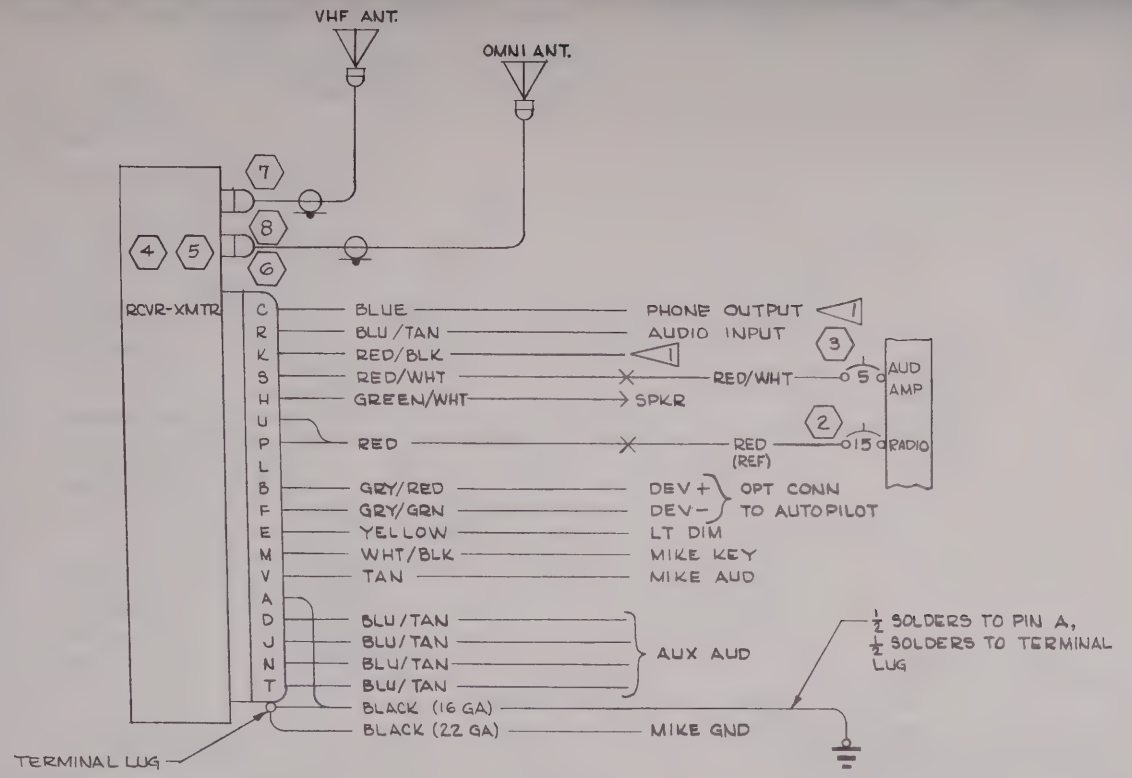


Mactive
21058716 & on
GLW 5-24-65
HJW 6-7-65
RRS JM
[illegible]

NOTES:

1. ON SINGLE CESSNA NAV/COM 300 INSTL, RED/BLK WIRE (PIN K) IS CONNECTED TO RED/WHT WIRE (PIN S) WITH AN S-1370-1 SPLICE, AND BLUE WIRE (PIN C) IS CONNECTED TO BLU/TAN WIRE (PIN R, D, J, N, OR T) WITH AN S-1370-1 SPLICE. WHEN THE NAV/COM 300 IS INSTALLED WITH OTHER RADIO UNITS, RED/WHT WIRE CONNECTS TO CKT BKR AS SHOWN & RED/BLK WIRE IS CUTOFF AT CONNECTOR; BLUE WIRE CONNECTS TO WIPER OF A SPKR-PHONE SWITCH & BLU/TAN WIRE CONNECTS TO SPKR TERMINAL OF SPKR-PHONE SWITCH.
2. S-1557-1 CAP REPLACED WITH S-1367-1-8 TERMINAL WHEN COMBINED WITH OTHER RADIOS.
3. FOR DUAL 514A INSTALLATIONS, REF PAGE 2.7.1.1

(SEE PAGE 2.7.1.1 FOR CONTINUATION OF NOTES)

| ITEM NO | PART NO. | DESCRIPTION | INSTALLED ON |
|---|---|---|---|
| 8 | 29752 | CONNECTOR (ARC) | |
| 7 | 29753 | CONNECTOR (ARC) | |
| 6 | 29747-0018 | CONNECTOR (ARC) | |
| 5 | 30410-1314 | RCVR-XMTR (360 CH) | (ARC) |
| 4 | 30410-1214 | RCVR-XMTR (100 CH) | (ARC) |
| 3 | S-1360-5 | CIRCUIT BREAKER | |
| 2 | S-1360-15 | CIRCUIT BREAKER | |
| 1 | | | |

EQUIPMENT TABLE

| WIRE CODE NO. | GA | MATERIAL | LG | TERMINALS | | | SERIALS |
|---|---|---|---|---|---|---|---|
| RED/WHT | 18 | -18-2-9 | | S-1370-1 | S-1367-1-6 | | |
| BLU/TAN | 22 | -22-6-10 | | SOLDER | S-1557-1 | 2 | |
| BLU/TAN | 22 | -22-6-10 | | | S-1557-1 | 2 | |
| BLU/TAN | 22 | -22-6-10 | | | S-1557-1 | 2 | |
| BLACK | 16 | -16-0 | | | S-1367-2-8 | | |
| WHT/BLK | 22 | -22-9-0 | | | | | |
| GRY/GRN | 22 | -22-8-5 | | | S-1557-1 | | |
| GRY/RED | 22 | -22-8-2 | | | S-1557-1 | | |
| BLU/TAN | 22 | -22-6-10 | | | S-1557-1 | 2 | |
| BLU/TAN | 22 | -22-6-10 | | | S-1557-1 | 2 | |
| RED/WHT | 18 | -18-2-9 | | | | | |
| RED/BLK | 18 | -18-2-0 | | | | | |
| BLACK | 22 | -22-0 | | | | | |
| TAN | 22 | -22-10 | | | | | |
| BLUE | 22 | -22-6 | | | | | |
| RED | 16 | -16-2 | | | S-1370-2 | | |
| YELLOW | 18 | -18-4 | | | | | |
| GRN/WHT | 20 | -20-5-9 | | SOLDER | S-341-2 | | |

8

WIRE TABLE

CESSNA AIRCRAFT CO. COMMERCIAL AIRCRAFT DIVISION, WICHITA, KANSAS

| | NAME | DATE |
|---|---|---|
| DRAWN | BALES | 7-6-64 |
| GROUP | R.E. MOORE | 8-15-64 |
| CHECK | R Stuck | 8-15-64 |
| PROJ | H Wise | 8-17-64 |

TITLE: WIRING DIAGRAM — CESSNA NAV/COM 300 (ARC TYPE 314A)

Cessna.

DWG NO. 1270475

SUPERSEDED BY 1270475 PAGE 2.32.1.0 | SUPERSEDES 1270405 PAGE 17.22 | MODEL 210 | REV | PAGE 2.7.1.0

FORM NO. 80-161

(SR 4455)

| CHG LET | REVISION | BY / DATE | CHK / APPD |
|---|---|---|---|
| | | | |

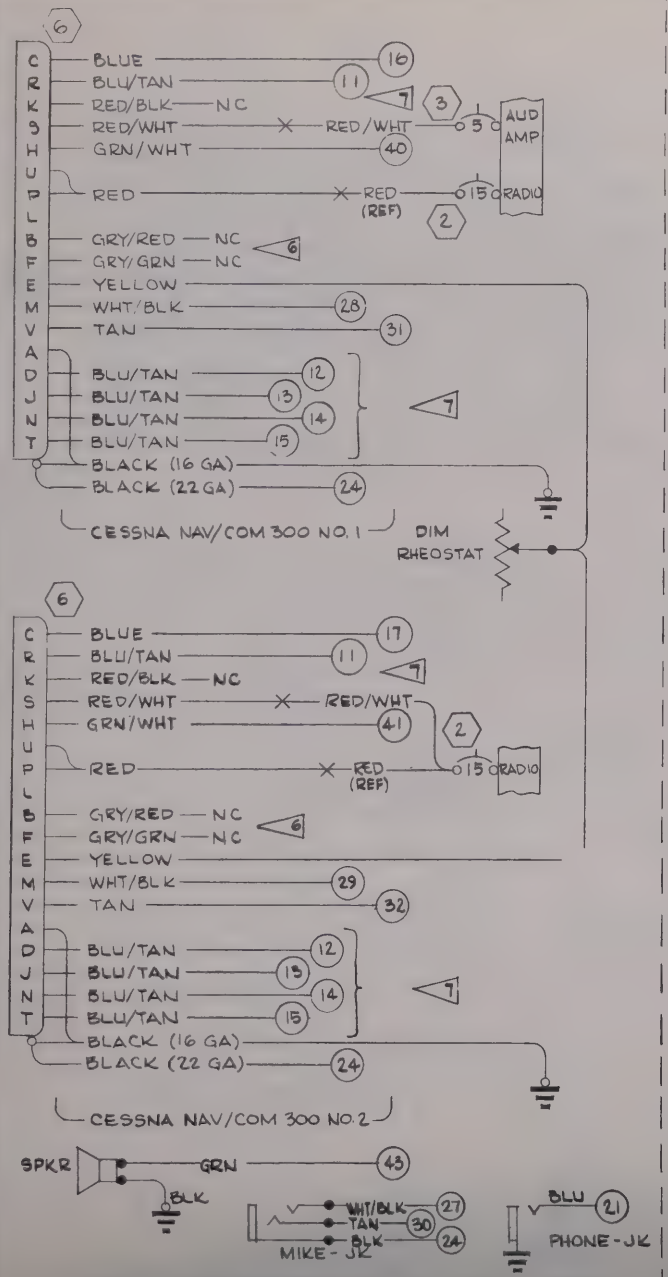


TYPICAL INTERCONNECTION OF DUAL CESSNA NAV/COM 300 SYSTEMS

NOTES CONTINUED:

4. CIRCLED NUMBERS "◯" REFER TO TERMINALS ON TERMINAL BOARD ASSY (REF PAGE 2.6.1, 2.6.2, 2.6.3)
5. CESSNA NAV/COM 300 AMPLIFIERS ARE OPERATED "ALWAYS HOT". SPEAKER OUTPUTS FROM EACH SYSTEM DRIVE EITHER A 5 OHM, 10 WATT DUMMY LOAD OR THE SHIP'S SPEAKER AS DETERMINED BY THE TRANSMITTER SELECTED (REF PAGE 2.6.3)

6 WHEN AN OPTIONAL NAV-O-MATIC AUTOPILOT WITH OMNI COUPLER IS COMBINED WITH A CESSNA NAV/COM 300, THE GRY/RED WIRE CONNECTS TO DEV + CIRCUIT & THE GRY/GRN WIRE CONNECTS TO DEV − CIRCUIT.

7 THE (5) BLU/TAN (1.50 AMP INPUTS) FROM EACH NAV/COM SET TO BE CONNECTED TO TERMINALS 11 THRU 15 ON TERMINAL BOARD IN ANY SEQUENCE. CAUTION: DO NOT CONNECT (2) BLU/TAN WIRES FROM SAME SET TO SAME TERMINAL.

8 WIRE MATERIAL PER S-1460.

Inactive
21058716 & on
GLW 5-24-65
H&W 6-7-65
RRS
MM
HMC

| WIRE CODE NO. | GA | MATERIAL | LG | TERMINALS | | SERIALS |
|---|---|---|---|---|---|---|

WIRE TABLE

| ITEM NO | PART NO. | DESCRIPTION | INSTALLED ON |
|---|---|---|---|

EQUIPMENT TABLE

CESSNA AIRCRAFT CO. COMMERCIAL AIRCRAFT DIVISION WICHITA, KANSAS

| | NAME | DATE |
|---|---|---|
| DRAWN | BALES | 7-6-64 |
| GROUP | R.E. Moore | 8-15-64 |
| CHECK | R. Stuck | 8-15-64 |
| PROJ | H. Wise | 8-17-64 |

TITLE: WIRING DIAGRAM — CESSNA NAV/COM 300 (ARC TYPE 514A)

Cessna.

DWG NO 1270475

SUPERSEDED BY 1270475 PAGE 2.32.1.1 | SUPERSEDES 1270405 PAGE 17.22.1 | MODEL 210 | REV | PAGE 2.7.1.1

FORM NO 80-161

(SR 4455)

| CHG LET | REVISION | BY DATE | CHK APPD |
|---|---|---|---|
| | | | |

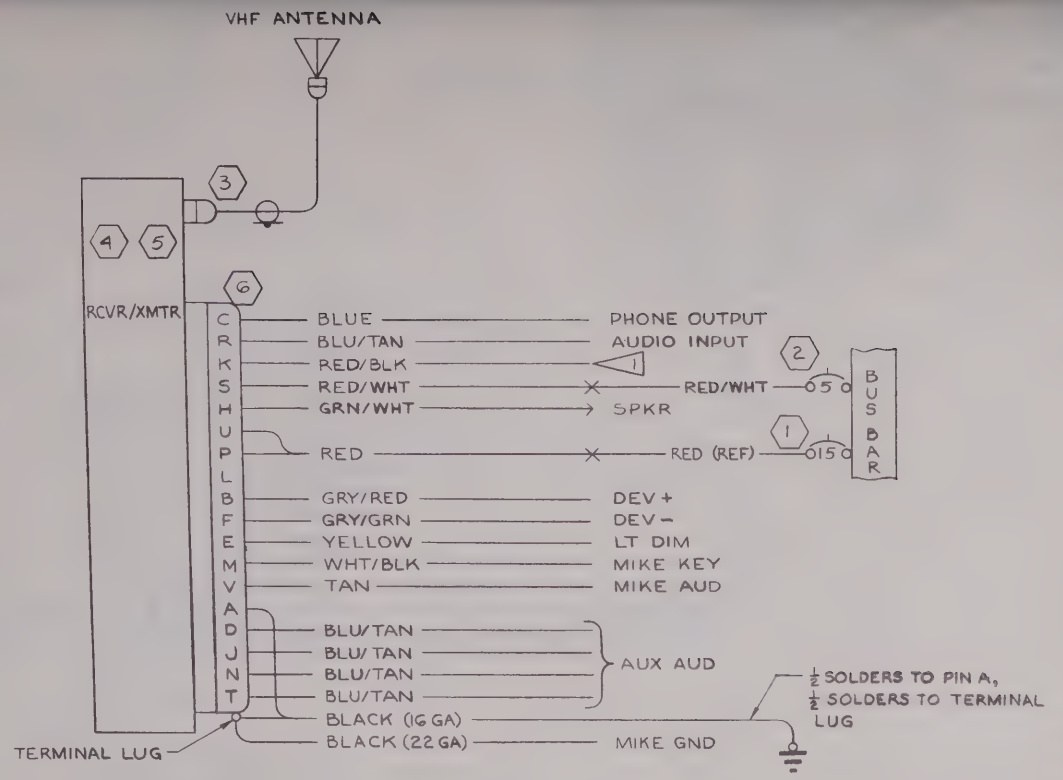


NOTES:

1. ON SINGLE CESSNA COM 300 INSTL, RED/BLK WIRE (PIN K) IS CONNECTED TO RED/WHT WIRE (PIN S) WITH AN S-1370-1 SPLICE, AND BLUE WIRE (PIN C) IS CONNECTED TO BLU/TAN WIRE (PIN R) WITH AN S-1370-1 SPLICE. WHEN THE COM 300 IS INSTALLED WITH OTHER RADIO UNITS, RED/WHT WIRE CONNECTS TO CKT BKR AS SHOWN & RED/BLK WIRE IS TERMINATED WITH S-1557-1 CAP; BLUE WIRE CONNECTS TO WIPER OF A SPKR-PHONE SWITCH & BLU/TAN WIRE CONNECTS TO SPKR TERMINAL OF SPKR-PHONE SWITCH.
2. S-1557-1 CAP REPLACED WITH S-1367-1-8 TERMINAL WHEN COMBINED WITH OTHER RADIOS.
3. WIRE MATL PER S-1460.

| ITEM NO | PART NO. | DESCRIPTION | INSTALLED ON |
|---|---|---|---|
| 6 | 29747-0018 | CONNECTOR (ARC) | |
| 5 | 31390-1614 | RCVR/XMTR (EXP)(ARC) | |
| 4 | 31390-1114 | RCVR/XMTR (ARC) | |
| 3 | 29753 | CONNECTOR (ARC) | |
| 2 | S-1360-5 | CIRCUIT BREAKER | |
| 1 | S-1360-15 | CIRCUIT BREAKER | |

EQUIPMENT TABLE

| WIRE CODE NO. | GA | MATERIAL | LG | TERMINALS | | | SERIALS |
|---|---|---|---|---|---|---|---|
| RED/WHT | 18 | -18-2-9 | | S-1370-1 | S-1367-1-6 | | |
| BLU/TAN | 22 | -22-6-10 | | SOLDER | S-1557-1 | 2 | |
| BLU/TAN | 22 | -22-6-10 | | | S-1557-1 | 2 | |
| BLU/TAN | 22 | -22-6-10 | | | S-1557-1 | 2 | |
| BLACK | 16 | -16-0 | | | S-1367-2-8 | | |
| WHT/BLK | 22 | -22-9-0 | | | | | |
| GRY/GRN | 22 | -22-8-5 | | | S-1557-1 | | |
| GRY/RED | 22 | -22-8-2 | | | S-1557-1 | | |
| BLU/TAN | 22 | -22-6-10 | | | S-1557-1 | 2 | |
| BLU/TAN | 22 | -22-6-10 | | | | | |
| RED/WHT | 18 | -18-2-9 | | | | | |
| RED/BLK | 18 | -18-2-0 | | | | | |
| BLACK | 22 | -22-0 | | | | | |
| TAN | 22 | -22-10 | | | | | |
| BLUE | 22 | -22-6 | | | | | |
| RED | 16 | -16-2 | | | S-1370-2 | | |
| YELLOW | 18 | -18-4 | | | | | |
| GRN/WHT | 20 | -20-5-9 | | SOLDER | S-341-2 | | |

WIRE TABLE

CESSNA AIRCRAFT CO. COMMERCIAL AIRCRAFT DIVISION WICHITA KANSAS

| | NAME | DATE |
|---|---|---|
| DRAWN | G WOOD | 7-16-64 |
| GROUP | [illegible] | 8-17-64 |
| CHECK | R. Stuck | 8-15-64 |
| PROJ | H. Wise | 8-18-64 |

TITLE: WIRING DIAGRAM — CESSNA COM 300 (ARC TYPE 524A)

Cessna.

DWG NO: 1270475

SUPERSEDED BY: | SUPERSEDES: | MODEL: 210 | REV: | PAGE: 2.7.2

FORM NO. 80-161

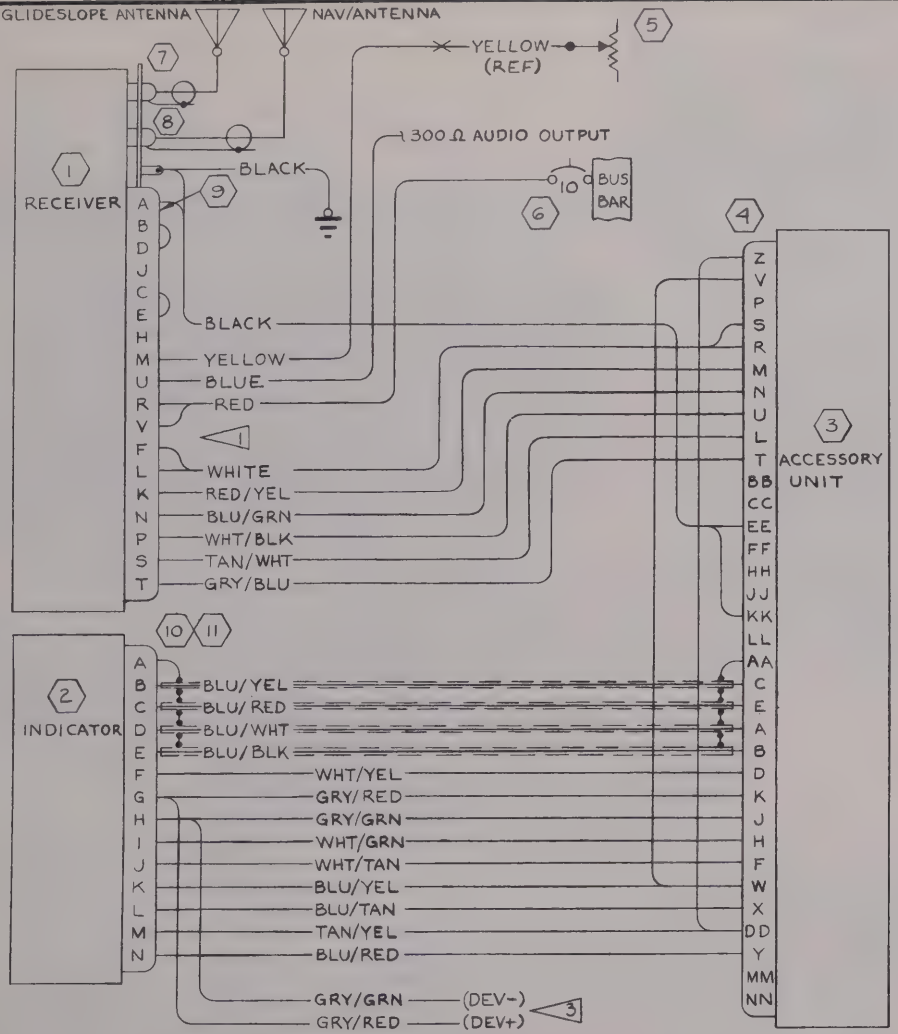


NOTES: (SR 4455)

1. RED, WHITE & BLACK 16 GA WIRES TO BE HALVED & SOLDERED TO PINS AS SHOWN.
2. WIRE MATERIAL PER S-1460 EXCEPT FOR SHIELDED WIRE.
3. TERMINALS NOT REQD WHEN RADIO IS INSTALLED WITH AN AUTOPILOT.

| CHG LET | REVISION | BY DATE | CHK APPD |
|---|---|---|---|
| A | BY REVISION: ADD BLACK WIRE FROM PIN A OF RCVR TO PIN EE & KK OF ACCESSORY UNIT. REMOVED JUMPER FROM PIN P TO PIN Z OF ACCESSORY UNIT. REMOVED BLACK WIRE FROM PIN Z TO GND ON ACCESSORY UNIT. ADD JUMPER FROM PIN Z TO PIN DD OF ACCESSORY UNIT. ADD JUMPER FROM PIN V TO PIN W | G L W 11-7-64 | RRS JM KLW |

| | | | | | | | |
|---|---|---|---|---|---|---|---|
| BLACK | 16 | -16-0 | | SOLDER | SOLDER | | |
| BLACK | 16 | -16-0 | | S-1367-2-8 | SOLDER | | |
| BLU/WHT | 22-S | S-1461-22-6-9 | | SOLDER | SOLDER | | |
| BLU/YEL | 22-S | S-1461-22-6-4 | | ↑ | ↑ | | |
| BLU/BLK | 22-S | S-1461-22-6-0 | | | | | |
| BLU/RED | 22-S | S-1461-22-6-2 | | | | | |
| WHT/BLK | 22 | -22-9-0 | | | | | |
| TAN/WHT | 22 | -22-10-9 | | | | | |
| TAN/YEL | 22 | -22-10-4 | | | | | |
| WHT/TAN | 22 | -22-9-10 | | | | | |
| WHT/GRN | 22 | -22-9-5 | | | ↓ | | |
| WHT/YEL | 22 | -22-9-4 | | ↑ | SOLDER | | |
| GRY/GRN | 22 | -22-8-5 | | SOLDER | S-1557-1 | | |
| GRY/GRN | 22 | -22-8-5 | | SOLDER | SOLDER | | |
| GRY/RED | 22 | -22-8-2 | | ↑ | S-1557-1 | | |
| GRY/RED | 22 | -22-8-2 | | | SOLDER | | |
| GRY/BLU | 22 | -22-8-6 | | | ↑ | | |
| BLU/TAN | 22 | -22-6-10 | | | | | |
| BLU/GRN | 22 | -22-6-5 | | | | | |
| BLU/YEL | 22 | -22-6-4 | | | | | |
| BLU/RED | 22 | -22-6-2 | | | ↓ | | |
| RED/YEL | 22 | -22-2-4 | | | | | |
| WHITE | 16 | -16-9 | | | SOLDER | | |
| BLUE | 22 | -22-6 | | | | | |
| YELLOW | 18 | -18-4 | | ↑ | S-1370-1 | | |
| RED | 16 | -16-2 | | SOLDER | S-1367-2-6 | | |
| WIRE CODE NO. | GA | MATERIAL | LG | TERMINALS | | | SERIALS |

2 WIRE TABLE

| ITEM NO | PART NO. | DESCRIPTION | INSTALLED ON |
|---|---|---|---|
| 11 | MS3057-12A | CLAMP | |
| 10 | MS3106A-20-27S | PLUG | |
| 9 | 29747-001B | CONNECTOR (ARC) | |
| 8 | 29752 | CONNECTOR (ARC) | |
| 7 | 29753 | CONNECTOR (ARC) | |
| 6 | S-1360-10 | CIRCUIT BREAKER | |
| 5 | R-12½-75-RS34 | RHEOSTAT (TRTA) | |
| 4 | 29747-0034 | CONNECTOR (ARC) | |
| 3 | 32890-0014 | ACCESSORY UNIT (ARC RA-525A) | |
| 2 | 32350 | INDICATOR (ARC IN-525A) | |
| 1 | 31380-1000 | RCVR (ARC R-525A-10) | |

EQUIPMENT TABLE

CESSNA AIRCRAFT CO., COMMERCIAL AIRCRAFT DIVISION, WICHITA, KANSAS

| | NAME | DATE |
|---|---|---|
| DRAWN | G WOOD | 4-30-64 |
| GROUP | [illegible] | 8-5-64 |
| CHECK | [illegible] | 7-14-64 |
| PROJ | [illegible] | 8-5-64 |

TITLE: WIRING DIAGRAM — CESSNA NAV/OMNI 300 (ARC TYPE 525A)

Cessna.

DWG NO 1270475

| SUPERSEDED BY | SUPERSEDES | MODEL | REV | PAGE |
|---|---|---|---|---|
| | | 210 | A | 2.8.1 |

FORM NO. 80-161

(SR4455)

| CHG LET | REVISION | BY DATE | CHK APPD |
|---|---|---|---|
| | | | |

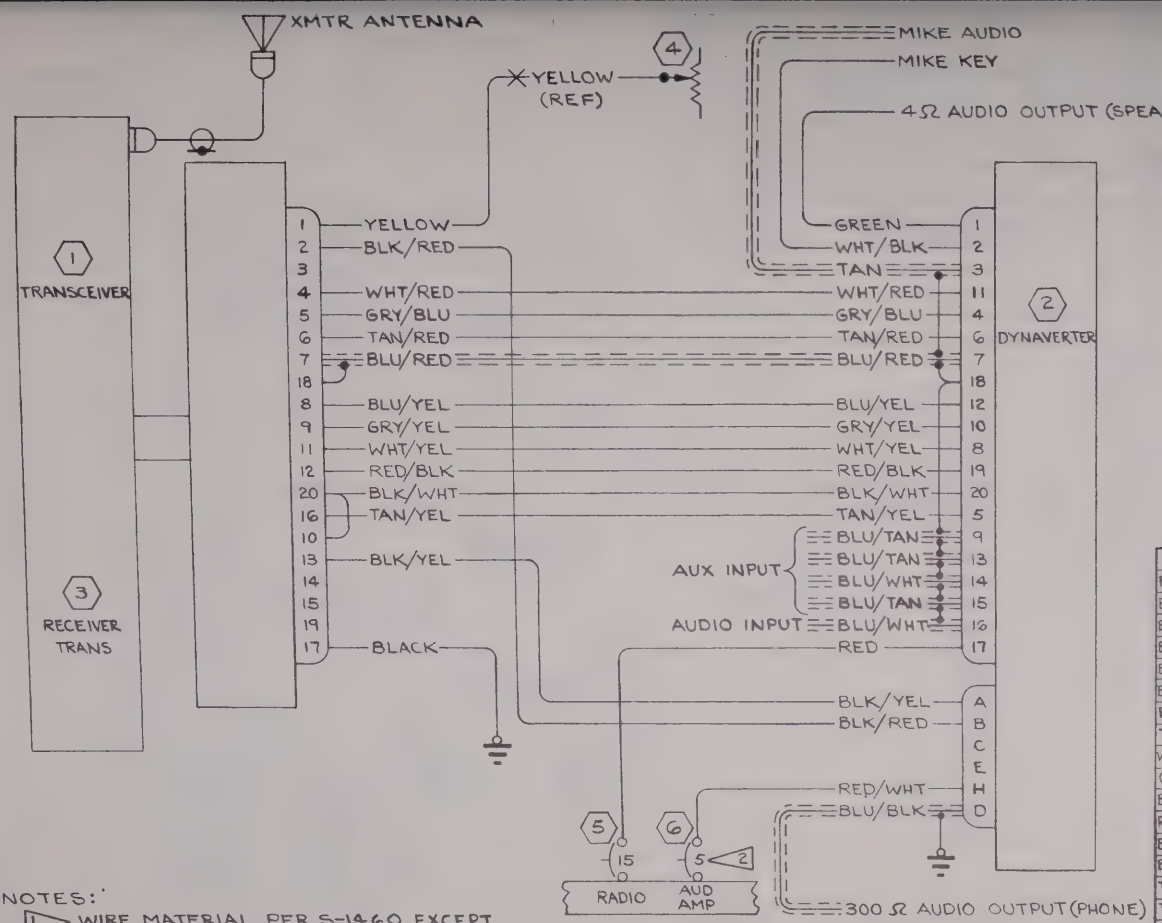


NOTES:

1. WIRE MATERIAL PER S-1460 EXCEPT FOR SHIELDED WIRE.
2. RED/WHT WIRE (ISO-AMP POWER) MAY BE CONNECTED TO A DIFFERENT BREAKER WHEN THIS SYSTEM IS COMBINED WITH OTHER 500 SERIES EQUIPMENT.

| WIRE CODE NO | GA | MATERIAL | LG | TERMINALS | | SERIALS |
|---|---|---|---|---|---|---|
| BLACK | 16 | -16-0 | | SOLDER | S-1367-2-8 | |
| RED/WHT | 18 | -18-2-9 | | | S-1367-1-6 | |
| BLU/BLK | 22S | S-1461-22-6-0 | | | | |
| BLU/WHT | 22S | S-1961-22-6-9 | | | | |
| BLU/WHT | 22S | S-1461-22-6-9 | | | | |
| BLU/TAN | 22S | S-1461-22-6-10 | | | | |
| BLU/TAN | 22S | S-1461-22-6-10 | | | | |
| BLU/TAN | 22S | S-1461-22-6-10 | | | | |
| TAN | 22S | S-1461-22-10 | | | | |
| WHT/BLK | 22 | -22-9-0 | | | | |
| GREEN | 20 | -20-5 | | | | |
| BLK/WHT | 18 | -18-0-9 | | | SOLDER | |
| RED/BLK | 18 | -18-2-0 | | | | |
| BLU/YEL | 22 | -22-6-4 | | | | |
| BLU/RED | 22S | S-1461-22-6-2 | | | | |
| TAN/YEL | 22 | -22-10-4 | | | | |
| TAN/RED | 22 | -22-10-2 | | | | |
| GRY/YEL | 22 | -22-8-4 | | | | |
| GRY/BLU | 22 | -22-8-6 | | | | |
| WHT/YEL | 22 | -22-9-4 | | | | |
| WHT/RED | 22 | -22-9-2 | | | | |
| BLK/YEL | 22 | -22-0-4 | | | | |
| BLK/RED | 22 | -22-0-2 | | | SOLDER | |
| YELLOW | 18 | -18-4 | | | S-1370-1 | |
| RED | 16 | -16-2 | | SOLDER | S-1367-2-6 | |

1 WIRE TABLE

| ITEM NO | PART NO. | DESCRIPTION | INSTALLED ON |
|---|---|---|---|
| 6 | S-1360-5 | CIRCUIT BREAKER | |
| 5 | S-1360-15 | CIRCUIT BREAKER | |
| 4 | R-12½-75-RS34 | RHEOSTAT (TRTA) | |
| 3 | 33580-1000 | RECEIVER/TRANS (ARC TYPE RT-302H) | |
| 2 | 32380-0014 | DYNAVERTER (ARC TYPE DV-302B) | |
| 1 | 33200-1000 | TRANSCEIVER (ARC TYPE RT-3026-10) | |

EQUIPMENT TABLE

CESSNA AIRCRAFT CO., COMMERCIAL AIRCRAFT DIVISION, WICHITA, KANSAS

| | NAME | DATE |
|---|---|---|
| DRAWN | RIDDER | 7-13-64 |
| GROUP | JM | 8-17-64 |
| CHECK | R. Stuck | 8-7-64 |
| PROJ | H Wu | 8-17-64 |

TITLE: WIRING DIAGRAM — CESSNA TRANSCEIVER 500 (ARC TYPE 3026)

Cessna.

DWG NO. 1270475

| SUPERSEDED BY | SUPERSEDES | MODEL: | REV. | PAGE |
|---|---|---|---|---|
| | 1270405 | 210 | | 2.10.1 |

(SR 4455)

| CHG LET | REVISION | BY / DATE | CHK / APPD |
|---|---|---|---|
| A | ADDED A2C3 CHOKE IN A+LINE & ADDED TO NOTE 2. ADDED 33827. 32680-0000 WAS 3268-0000 | SKH 9-10-65 | RR 5 ALA 7 H/W |

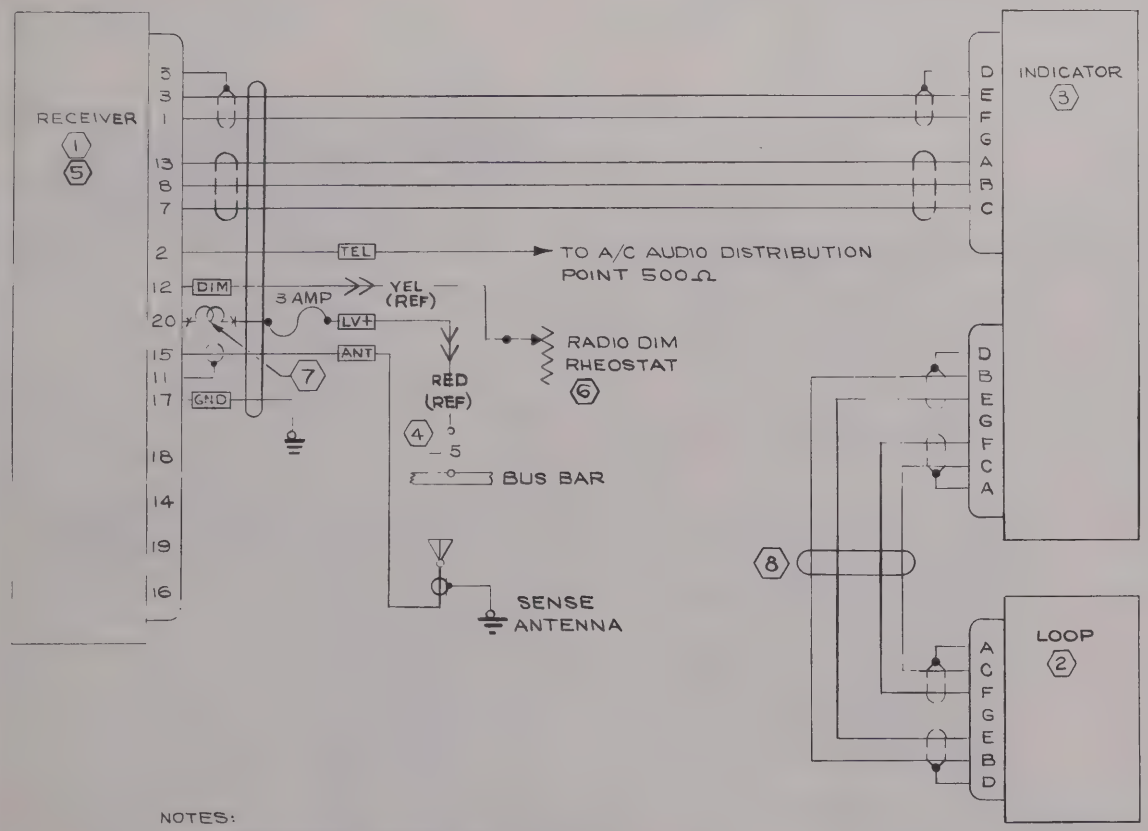


NOTES:

1. CONNECTIONS SHOWN ARE FOR TOP MOUNTED SENSE & BOTTOM MOUNTED LOOP ANTENNA.
2. ALL WIRES VENDOR FURNISHED WITH RCVR EXCEPT CHOKE BETWEEN PIN 20 & FUSEHOLDER WHICH MUST BE ADDED ON INSTL IN ACFT.

| ITEM NO | PART NO | DESCRIPTION | INSTALLED ON |
|---|---|---|---|
| 8 | 33827 | LOOP CABLE (ARC) | |
| 7 | A-263 | CHOKE (CTAT) | |
| 6 | R-12½-75-RS34 | RHEOSTAT (TRTA) | |
| 5 | 28340-1400 | RCVR (WITH BFO) | (ARC R-521A-14) |
| 4 | S-1360-5 | CIRCUIT BREAKER | |
| 3 | 32680-0000 | INDICATOR (ARC) | (ARC IN-521B) |
| 2 | 32880-1000 | LOOP (ARC) | (ARC L-521B-10) |
| 1 | 28340-1500 | RCVR (WITHOUT BFO) | (ARC R-521A-15) |

EQUIPMENT TABLE

| WIRE CODE NO | GA | MATERIAL | LG | TERMINALS | | SERIALS |
|---|---|---|---|---|---|---|

WIRE TABLE

CESSNA AIRCRAFT CO., COMMERCIAL AIRCRAFT DIVISION, WICHITA, KANSAS

| | NAME | DATE |
|---|---|---|
| DRAWN | BREEN | 8-5-64 |
| GROUP | [illegible] | 8-3-64 |
| CHECK | R. Stuck | 8-25-64 |
| PROJ | H. Wise | 8-24-64 |

TITLE: WIRING DIAGRAM — CESSNA ADF 300 (ARC TYPE 521B)

Cessna.

DWG NO 1270475

SUPERSEDED BY

SUPERSEDES 1270405 PAGE 17B

MODEL 210

REV A

PAGE 2.12

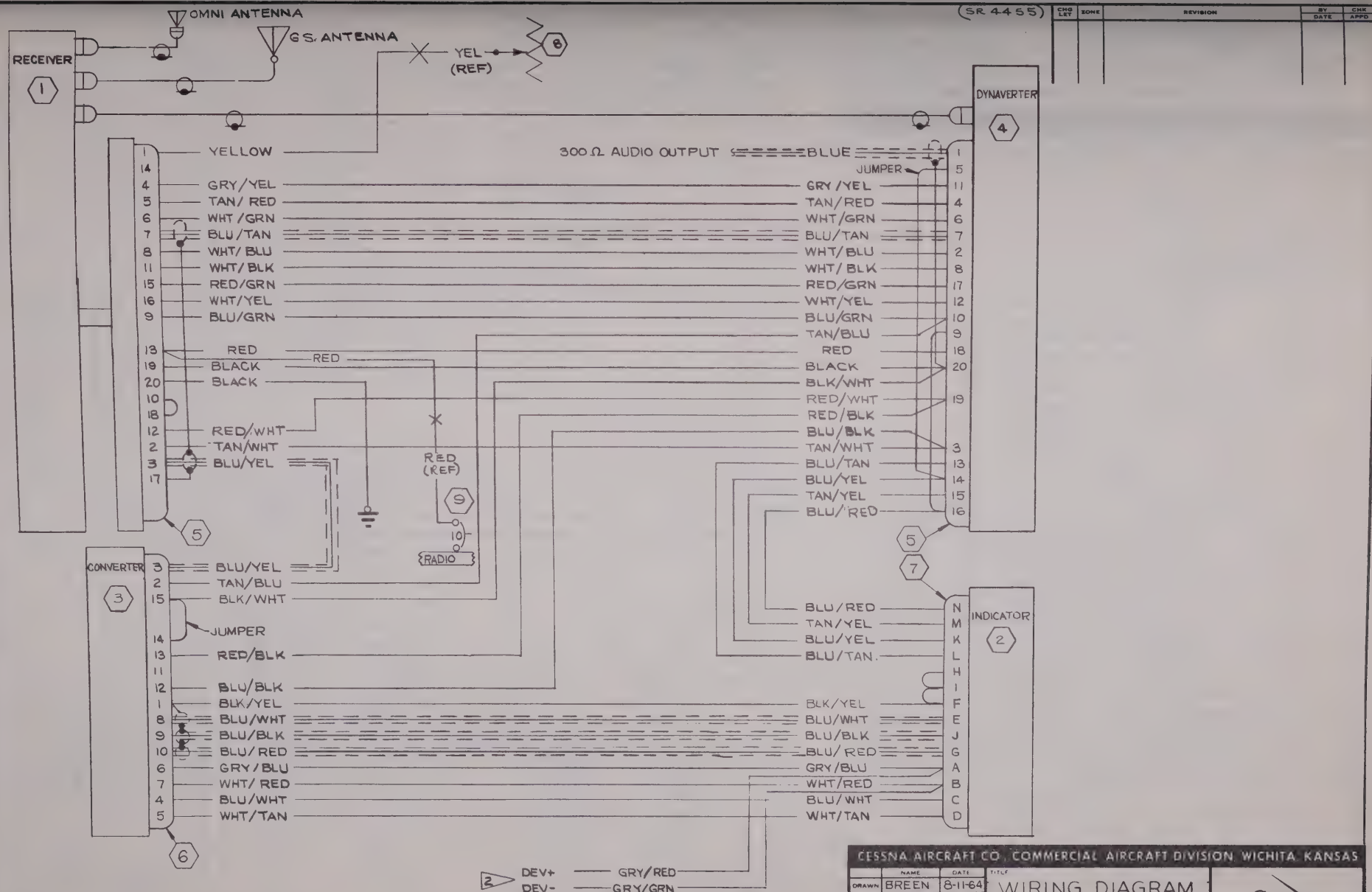


CESSNA AIRCRAFT CO. COMMERCIAL AIRCRAFT DIVISION WICHITA, KANSAS

| | NAME | DATE |
|---|---|---|
| DRAWN | BREEN | 8-11-64 |
| GROUP | Ed Mady | 9-3-64 |
| CHECK | R. Stuck | 9-3-64 |
| STRESS | Dw Clark | 9-4-64 |
| PROJ | J. Wise | 9-4-64 |

TITLE: WIRING DIAGRAM CESSNA NAV/OMNI 500 (ARC TYPE 319C)

Cessna.

DWG NO 1270475

SUPERSEDED BY

SUPERSEDES 1270A05 PAGE 17.11.3

MODEL: 210

REV:

PAGE: 2.13.1.1.

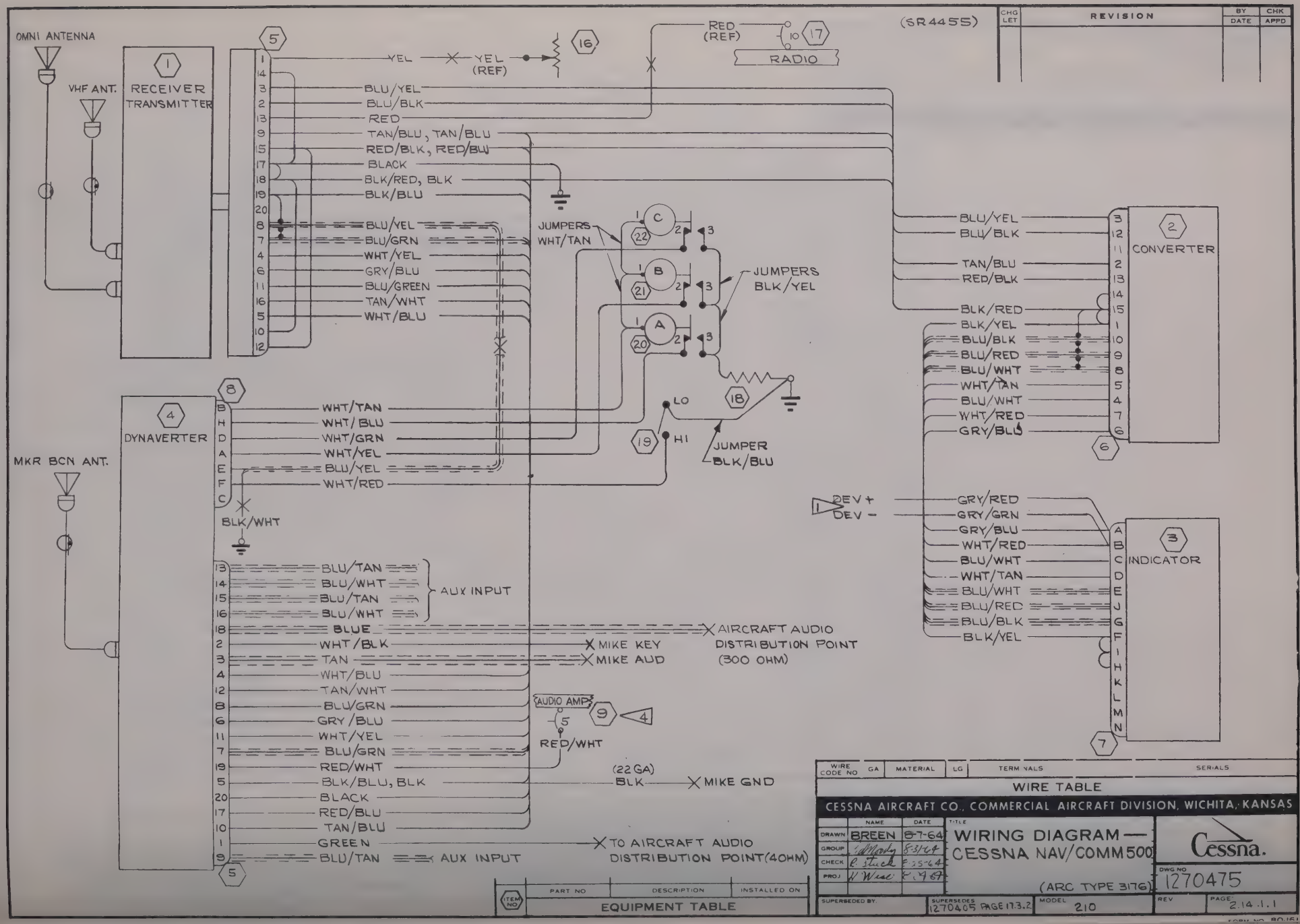
(SR4455)
CHG LET
REVISION
BY
DATE
CHK
APPD
OMNI ANTENNA
VHF ANT.
RECEIVER TRANSMITTER
MKR BCN ANT.
DYNAVERTER
CONVERTER
INDICATOR
RADIO
YEL
YEL (REF)
RED (REF)
BLU/YEL
BLU/BLK
RED
TAN/BLU, TAN/BLU
RED/BLK, RED/BLU
BLACK
BLK/RED, BLK
BLK/BLU
BLU/GRN
WHT/YEL
GRY/BLU
BLU/GREEN
TAN/WHT
WHT/BLU
JUMPERS WHT/TAN
JUMPERS BLK/YEL
JUMPER BLK/BLU
LO
HI
WHT/TAN
WHT/GRN
WHT/RED
BLK/WHT
BLU/TAN
BLU/WHT
AUX INPUT
BLUE
WHT/BLK
TAN
AIRCRAFT AUDIO DISTRIBUTION POINT (300 OHM)
MIKE KEY
MIKE AUD
AUDIO AMP
RED/WHT
(22 GA) BLK
MIKE GND
GREEN
TO AIRCRAFT AUDIO DISTRIBUTION POINT (4OHM)
BLK/BLU, BLK
BLK/RED
BLU/RED
BLU/WHT
GRY/BLU
GRY/RED
GRY/GRN
DEV +
DEV −
WIRE CODE NO
GA
MATERIAL
LG
TERMINALS
SERIALS
WIRE TABLE
CESSNA AIRCRAFT CO., COMMERCIAL AIRCRAFT DIVISION, WICHITA, KANSAS
NAME
DATE
DRAWN BREEN 8-7-64
GROUP 8-31-64
CHECK 8-25-64
PROJ 8-4-64
TITLE
WIRING DIAGRAM — CESSNA NAV/COMM 500
(ARC TYPE 3176)
Cessna.
DWG NO 1270475
SUPERSEDED BY
SUPERSEDES 1270405 PAGE 17.3.2
MODEL 210
REV
PAGE 2.14.1.1
ITEM NO
PART NO
DESCRIPTION
INSTALLED ON
EQUIPMENT TABLE

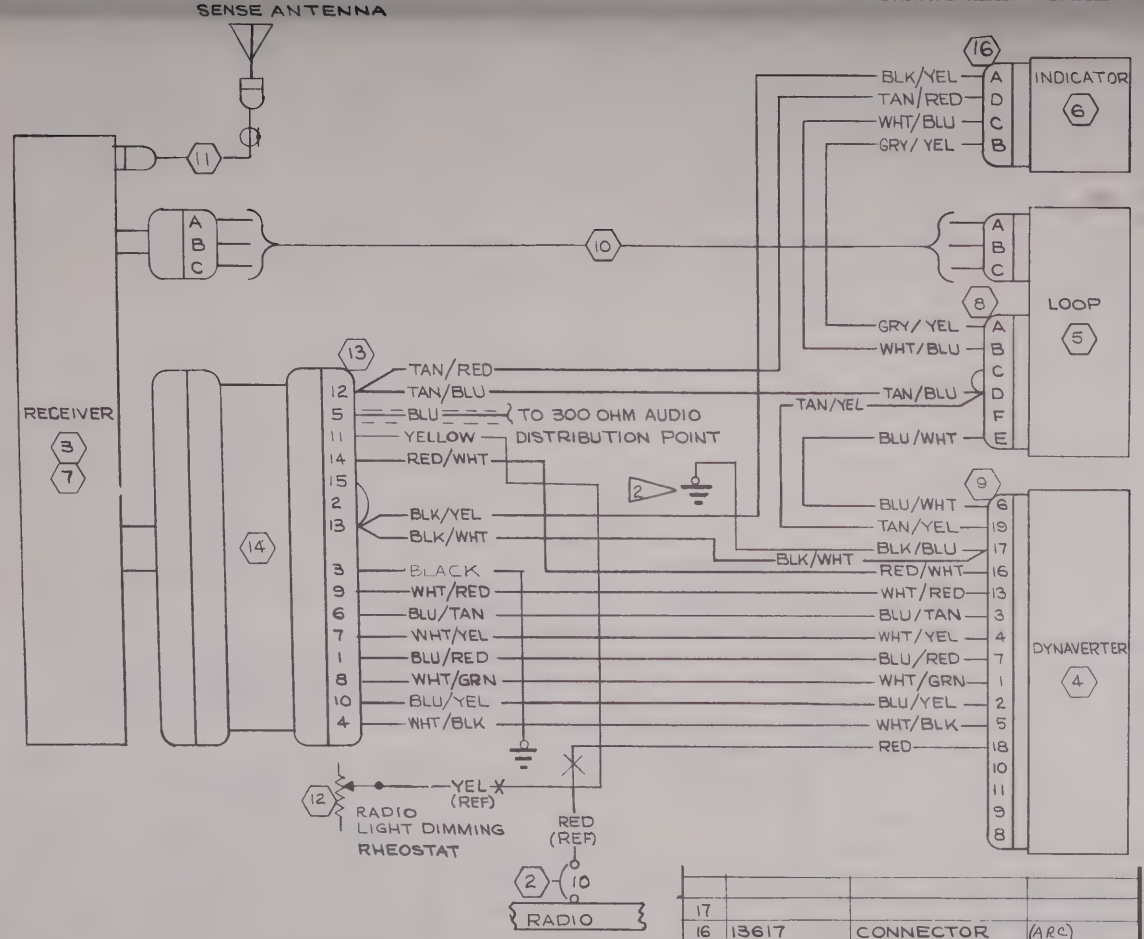


(SR4455)

| CHG LET | REVISION | BY DATE | CHK APPD |
|---|---|---|---|
| A | REMOVED YELLOW WIRE FROM PIN 3 OF 26795. ADD BLACK WIRE FROM PIN 3 TO GND. ADD WIRE FROM PIN 11 OF 26795 TO RHEOSTAT. (SR 4455) | GLW 9-22-64 | RRS TM NWC |

INACTIVE EFF THRU SER 21058715 SER 337-0239

W.J.R. 4-22-65
" " 5-19-65
RRS 5-17-65
TM NWC

NOTES:
1. INDICATOR & LOOP CONNECTIONS SHOWN ARE FOR TOP MOUNTED LOOP & SENSE ANTENNA.
2. BLK/BLU WIRE TO BE GROUNDED TO AIRFRAME NEAR LOOP BUT NOT CONNECTED TO LOOP.
3. ALL WIRE MATERIAL PER S-1460 EXCEPT AS SHOWN.

| ITEM NO | PART NO | DESCRIPTION | INSTALLED ON |
|---|---|---|---|
| 17 | | | |
| 16 | 13617 | CONNECTOR | (ARC) |
| 15 | | | |
| 14 | 27859 | FILTER ASSY | (ARC) |
| 13 | 26795 | CONNECTOR | (ARC) |
| 12 | R-12½-75-RS34 | RHEOSTAT (TRTA) | |
| 11 | 18637 | SENSE ANT. CABLE | (ARC) |
| 10 | 17985 | LOOP CABLE ASSY | (ARC) |
| 9 | 27881 | CONNECTOR | (ARC) |
| 8 | 19062 | CONNECTOR | (ARC) |
| 7 | 33230-1000 | RECEIVER (WITHOUT BFO) | ARC R318G-10 |
| 8 | 27500 | INDICATOR | (ARC IN-318A-1) |
| 5 | 18000 | LOOP | (ARC L-11) |
| 4 | 26969-0014 | DYNAVERTER | (ARC TYPE DV-318A) |
| 3 | 33230-1200 | RECEIVER (WITH BFO) | (ARC TYPE R-318G12) |
| 2 | S-1360-10 | CIRCUIT BREAKER | |
| 1 | | | |

EQUIPMENT TABLE

| WIRE CODE NO. | GA | MATERIAL | LG | TERMINALS | | SERIALS |
|---|---|---|---|---|---|---|
| BLACK | 18 | -18-0 | | S-1367-1-8 | SOLDER | |
| YELLOW | 18 | -18-4 | | S-1370-1 | SOLDER | |
| BLUE | 22 | SS-1461-22-6 | | | | |
| BLK/WHT | 18 | -18-0-9 | | SOLDER | | |
| TAN/RED | 22 | -22-10-2 | | | | |
| BLK/YEL | 22 | -22-0-4 | | | | |
| GRY/YEL | 22 | -22-8-4 | | | | |
| WHT/BLU | 22 | -22-9-6 | | | | |
| TAN/BLU | 22 | -22-10-6 | | SOLDER | | |
| RED | 16 | -16-2 | | S-1370-2 | | |
| WHT/BLK | 22 | -22-9-0 | | SOLDER | | |
| BLU/YEL | 22 | -22-6-4 | | | | |
| WHT/GRN | 22 | -22-9-5 | | | | |
| BLU/RED | 22 | -22-6-2 | | | | |
| WHT/YEL | 22 | -22-9-4 | | | | |
| BLU/TAN | 22 | -22-8-10 | | | | |
| WHT/RED | 22 | -22-9-2 | | | | |
| RED/WHT | 18 | -18-2-9 | | | | |
| BLK/BLU | 22 | -22-0-6 | | | SOLDER | |
| TAN/YEL | 22 | -22-10-4 | | | S-1367-1-8 | |
| BLU/WHT | 22 | -22-6-9 | | SOLDER | SOLDER | |

3 WIRE TABLE

CESSNA AIRCRAFT CO. COMMERCIAL AIRCRAFT DIVISION WICHITA KANSAS

| | NAME | DATE |
|---|---|---|
| DRAWN | BREEN | 8-10-64 |
| GROUP | ,,1 | 8-25-64 |
| CHECK | R. Stuck | 8-24-64 |
| PROJ | H. Wine | 8-25-64 |

TITLE: WIRING DIAGRAM — CESSNA ADF 500 (ARC TYPE 318G)

Cessna.

DWG NO. 1270475

| SUPERSEDED BY | SUPERSEDES | MODEL | REV. | PAGE |
|---|---|---|---|---|
| 1270475 PAGE 2.31.1 | 0770610 PAGE 17.2.1 | 210 | A | 2.15.1 |

FORM NO. 80-161

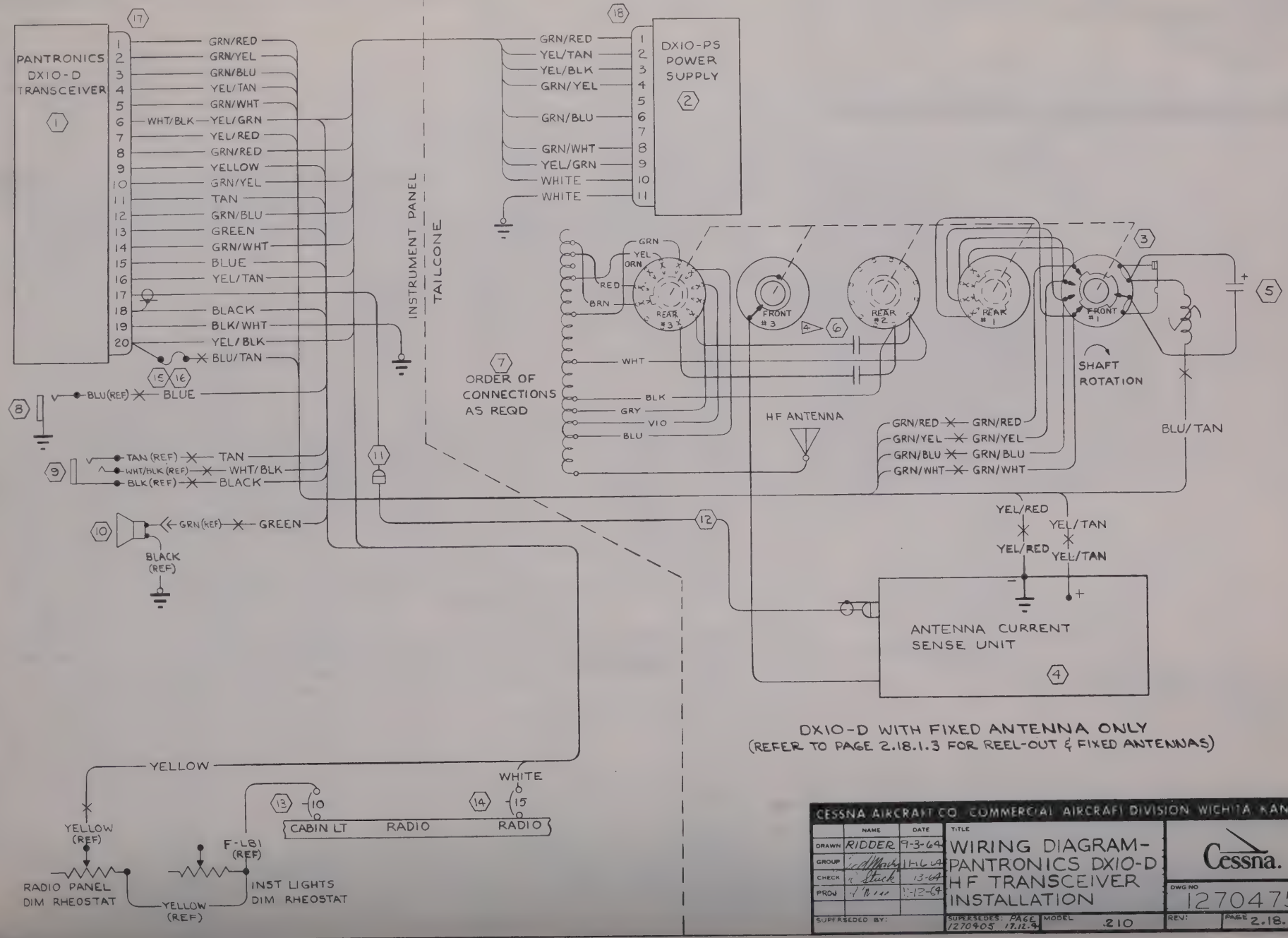


CESSNA AIRCRAFT CO. COMMERCIAL AIRCRAFT DIVISION WICHITA KANSAS

| | NAME | DATE |
|---|---|---|
| DRAWN | RIDDER | 9-3-64 |
| GROUP | | 11-6-64 |
| CHECK | Stuck | 13-64 |
| PROJ | | 11-12-64 |

SUPERSEDED BY:

TITLE: WIRING DIAGRAM-PANTRONICS DX10-D H F TRANSCEIVER INSTALLATION

SUPERSEDES: PAGE 1270405 17.12.4 | MODEL 210

Cessna.

DWG NO 1270475

REV:

PAGE 2.18.1.2

FORM NO 80156

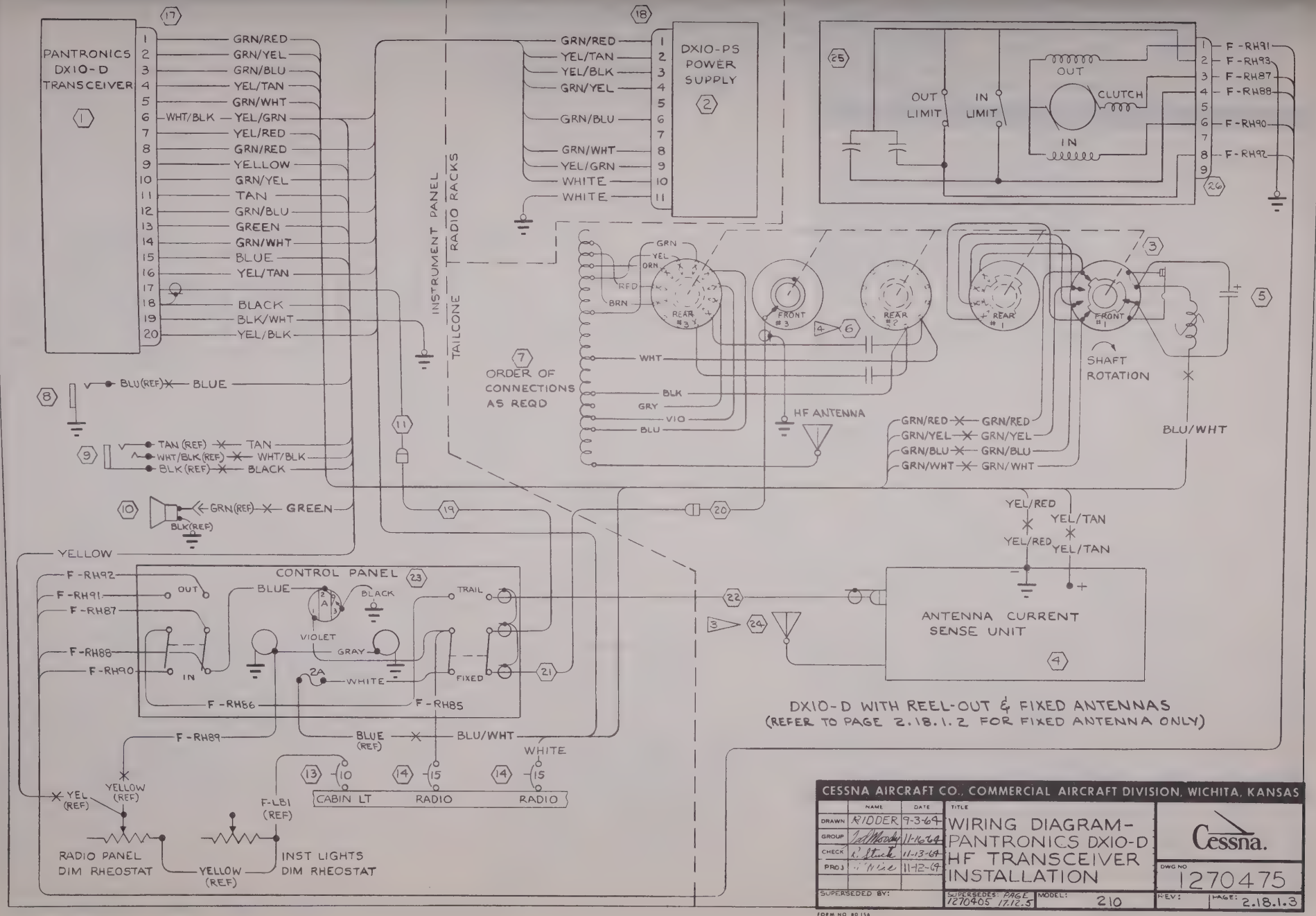


CESSNA AIRCRAFT CO., COMMERCIAL AIRCRAFT DIVISION, WICHITA, KANSAS

| | NAME | DATE |
|---|---|---|
| DRAWN | RIDDER | 9-3-69 |
| GROUP | Ted Moody | 11-16-69 |
| CHECK | C. Stuck | 11-13-69 |
| PROJ | [illegible] | 11-12-69 |

SUPERSEDED BY:

TITLE: WIRING DIAGRAM- PANTRONICS DX10-D HF TRANSCEIVER INSTALLATION

Cessna.

DWG NO 1270475

SUPERSEDES: PAGE 1270405 17.12.5 | MODEL: 210 | REV: | PAGE: 2.18.1.3

FORM NO 80156

(SR4455)

| CHG LET | REVISION | BY DATE | CHK APPD |
|---|---|---|---|
| | | | |

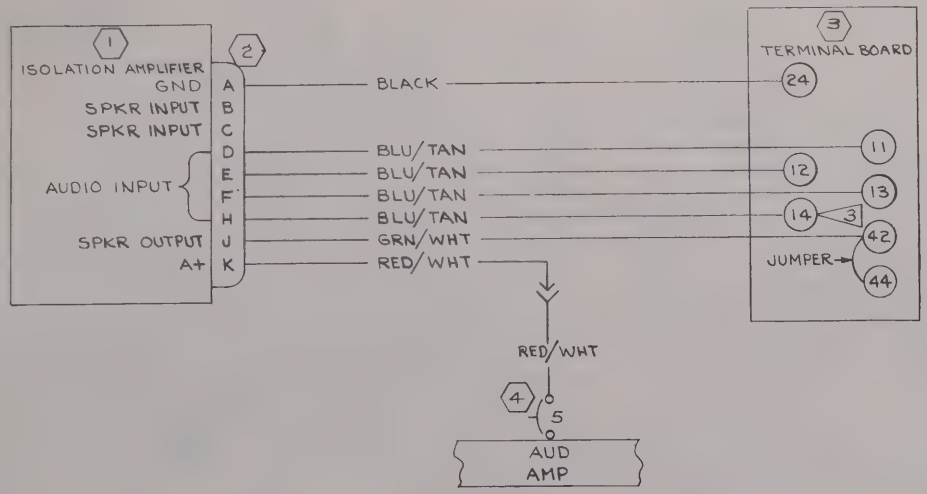


Inactive EARLY 1966 & ON
(SR4938) & ON
GLW 10-26-65
HLW 11-24-65
RRS 11-30-65
TM
H.M. 12-6-65

NOTES:

1. WIRE MATERIAL PER S-1460.
2. CONNECTOR IS FURNISHED WITH KA-10 AMP.
3. WHEN MKR BCN (ARC R-502B) IS INSTL, BLUE/TAN WIRE CONNECTS TO TERMINAL 15 ON TERMINAL BOARD.
4. TERMINAL BLOCK NUMBERS TO BE STAMPED ON WIRE PER CES 1015.

| WIRE CODE NO | GA | MATERIAL | LG | TERMINALS | | | SERIALS |
|---|---|---|---|---|---|---|---|
| RED/WHT | 18 | -18-2-9 | | S-341-2 | S-1367-1-6 | | |
| RED/WHT | 18 | -18-2-9 | | SOLDER | S-341-2 | | |
| GRN/WHT | 20 | -20-5-9 | | SOLDER | S-1367-1-8 | | |
| BLU/TAN | 22 | -22-6-10 | | SOLDER | S-1367-1-8 | | |
| BLU/TAN | 22 | -22-6-10 | | SOLDER | S-1367-1-8 | | |
| BLU/TAN | 22 | -22-6-10 | | SOLDER | S-1367-1-8 | | |
| BLU/TAN | 22 | -22-6-10 | | SOLDER | S-1367-1-8 | | |
| BLACK | 22 | -22-0 | | SOLDER | S-1367-1-8 | | |

1 WIRE TABLE

| ITEM NO | PART NO | DESCRIPTION | INSTALLED ON |
|---|---|---|---|
| 4 | S-1360-5 | CIRCUIT BREAKER | |
| 3 | 0770714-1 | TERMINAL BOARD | |
| 2 | 126-222 | CONNECTOR (AMBE) | |
| 1 | KA-10 | ISOLATION AMP | (KG) |

2

EQUIPMENT TABLE

CESSNA AIRCRAFT CO., COMMERCIAL AIRCRAFT DIVISION, WICHITA, KANSAS

| | NAME | DATE |
|---|---|---|
| DRAWN | RIDDER | 9-18-64 |
| GROUP | Ted Moody | 9-29-64 |
| CHECK | C. Stuck | 9-28-64 |
| PROJ | [illegible] | 9-28-64 |

TITLE: WIRING DIAGRAM — KING KA-10 ISOLATION AMPLIFIER

Cessna.

DWG NO 1270475

SUPERSEDED BY 1270475 PAGE 2.35.1 | SUPERSEDES 1270405 PAGE 17.16 | MODEL 210 | REV | PAGE 2.19

FORM NO. 80-161

NOTES:
1. ITEMS 6, 7, & 8 ARE SUPPLIED AS PART OF KN-60 INSTL KIT NO. 050-1052-00.

| CHG LET | REVISION | BY DATE | CHK APPD |
|---|---|---|---|
| | | | |

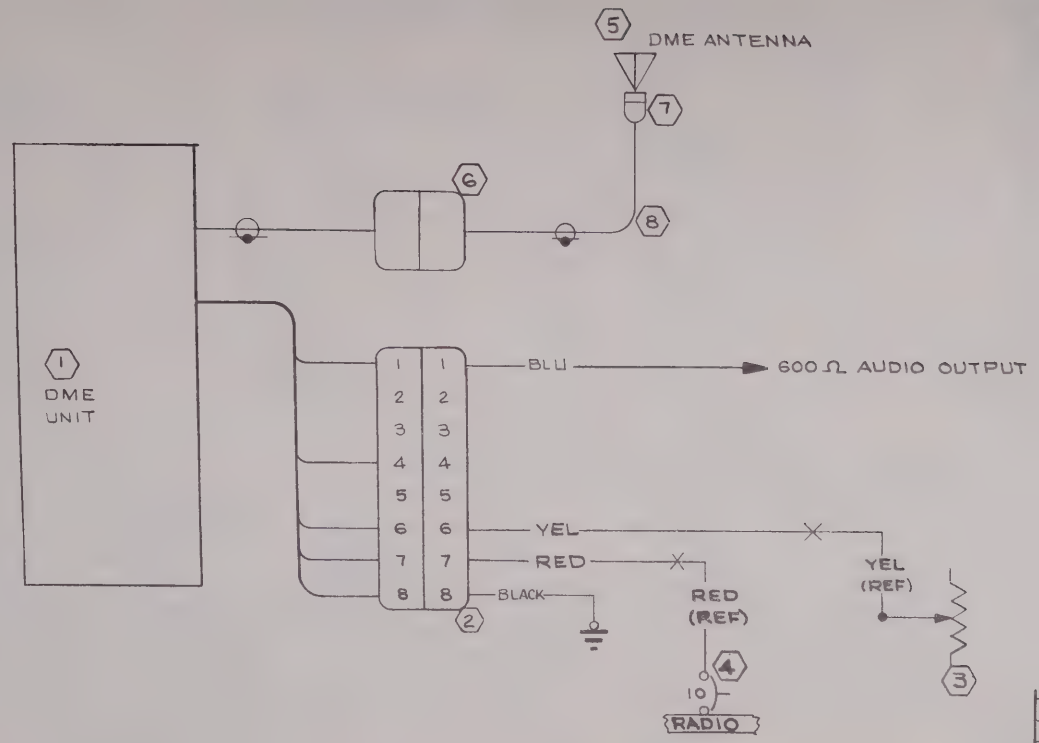


| WIRE CODE NO. | GA | MATERIAL | LG | TERMINALS | | SERIALS |
|---|---|---|---|---|---|---|
| BLU | 22 | -22-6 | | SOLDER | | |
| RED | 16 | -16-2 | | | S-1370-2 | |
| YEL | 18 | -18-4 | | | S-1370-1 | |
| BLACK | 16 | -16-0 | | SOLDER | S-1367-28 | |

WIRE TABLE

| ITEM NO | PART NO. | DESCRIPTION | INSTALLED ON |
|---|---|---|---|
| 8 | 024-0001-00 | R.F. CABLE (KG) | |
| 7 | 030-24-00 | CONNECTOR RT ANGLE (KG) | |
| 6 | 030-0021-01 | CONNECTOR (KG) | |
| 5 | KA-15 | ANTENNA (KG) | |
| 4 | S-1360-10 | CIRCUIT BKR | |
| 3 | R-12[illegible]-75-R534 | RHEOSTAT (TRTA) | |
| 2 | 030-2043-00 | CONNECTOR (KG) | |
| 1 | KN-60 | DME UNIT (KG) | |

EQUIPMENT TABLE

CESSNA AIRCRAFT CO. COMMERCIAL AIRCRAFT DIVISION WICHITA KANSAS

| | NAME | DATE |
|---|---|---|
| DRAWN | BREEN | 8-30-64 |
| GROUP | [illegible] | 12-5-64 |
| CHECK | R. Stuck | 11-21-64 |
| PROJ | H. Wise | 11-2-64 |

TITLE: WIRING DIAGRAM — KING KN-60 DME

Cessna.

DWG NO 1270475

| SUPERSEDED BY | SUPERSEDES | MODEL: 210 | REV: | PAGE: 2.20.1 |
|---|---|---|---|---|

FORM NO 80-161

| CHG LET | REVISION | BY DATE | CHK APPD |
|---|---|---|---|
| | SEE PG. 2.21-1 | | |

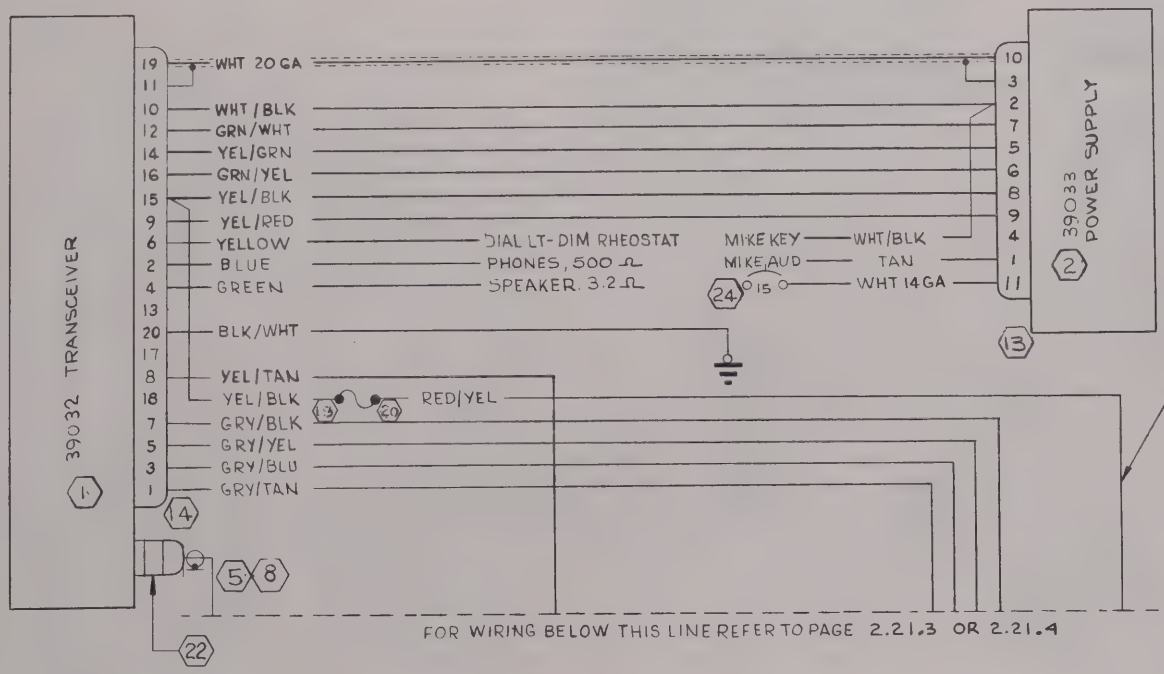


| WIRE CODE NO. | GA | MATERIAL | LG | TERMINALS | | SERIALS |
|---|---|---|---|---|---|---|
| | | | | | | |

WIRE TABLE

| ITEM NO | PART NO | DESCRIPTION | INSTALLED ON |
|---|---|---|---|
| | | | |

EQUIPMENT TABLE

CESSNA AIRCRAFT CO., COMMERCIAL AIRCRAFT DIVISION, WICHITA, KANSAS

| | NAME | DATE |
|---|---|---|
| DRAWN | G WOOD | 10-17-64 |
| GROUP | | 11-16-64 |
| CHECK | | 11-11-64 |
| PROJ | | 11-16-64 |

TITLE: WIRING DIAGRAM — PANTRONICS DX10-DA

Cessna.

DWG NO. 1270475

| SUPERSEDED BY | SUPERSEDES | MODEL | REV | PAGE |
|---|---|---|---|---|
| | | 210 | A | 2.21.2 |

FORM NO. 80-161

| CHG LET | REVISION | BY DATE | CHK APPD |
|---|---|---|---|
| | SEE PG 2.21.1 | | |

FOR WIRING ABOVE THIS LINE REFER TO PAGE 2.21.2

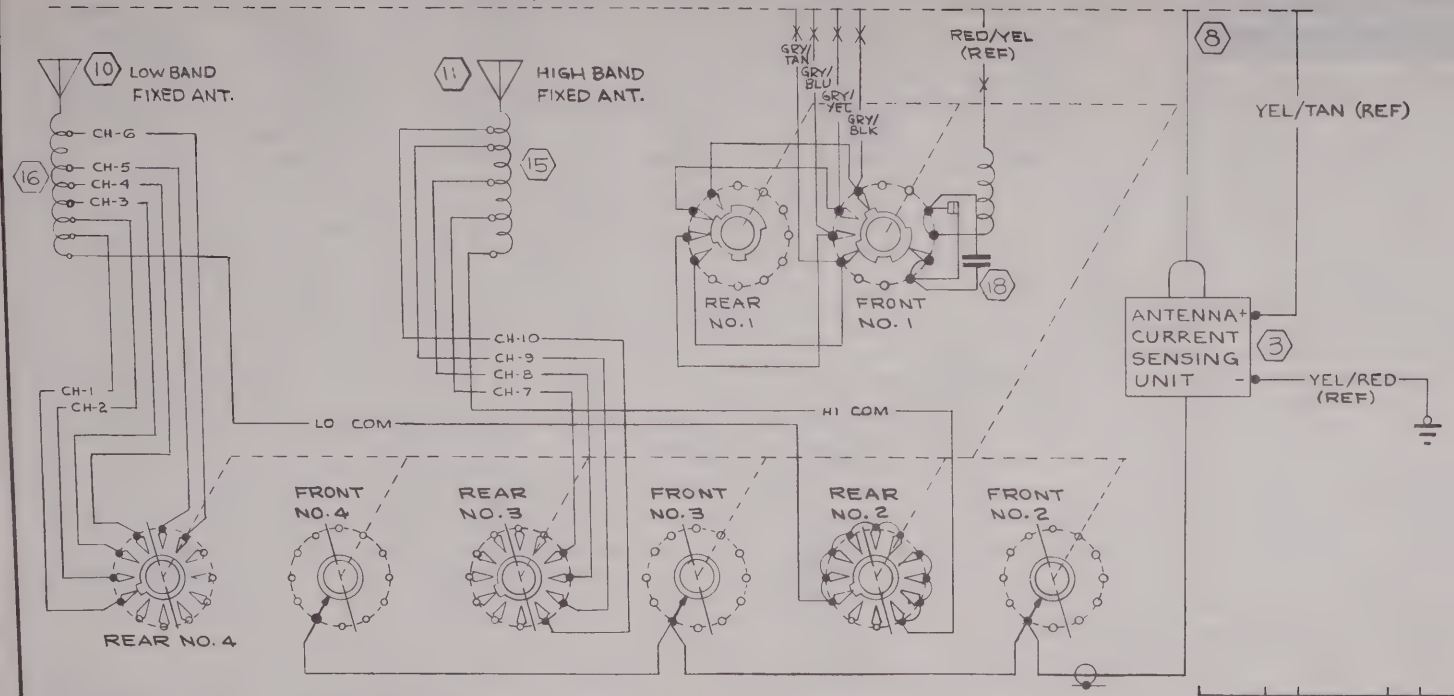


17 SWITCH
(SHOWN IN CHANNEL 1 POS)
(WAFFERS SHOWN AS VIEWED FROM MOTOR SIDE)

| WIRE CODE NO. | GA | MATERIAL | LG | TERMINALS | | SERIALS |
|---|---|---|---|---|---|---|
| | | | | | | |

WIRE TABLE

| ITEM NO | PART NO. | DESCRIPTION | INSTALLED ON |
|---|---|---|---|
| | | | |

EQUIPMENT TABLE

CESSNA AIRCRAFT CO. COMMERCIAL AIRCRAFT DIVISION WICHITA, KANSAS

| | NAME | DATE |
|---|---|---|
| DRAWN | G WOOD | 10-8-64 |
| GROUP | Ted Mardy | 11-16-64 |
| CHECK | R. Stuck | 11-11-64 |
| PROJ | R. Wise | 11-16-64 |

TITLE: WIRING DIAGRAM — PANTRONICS DX10-DA

Cessna.

DWG NO. 1270475

| SUPERSEDED BY | SUPERSEDES | MODEL: 210 | REV: C | PAGE: 2.21.3 |
|---|---|---|---|---|
| | | | | |

FORM NO. 80-161

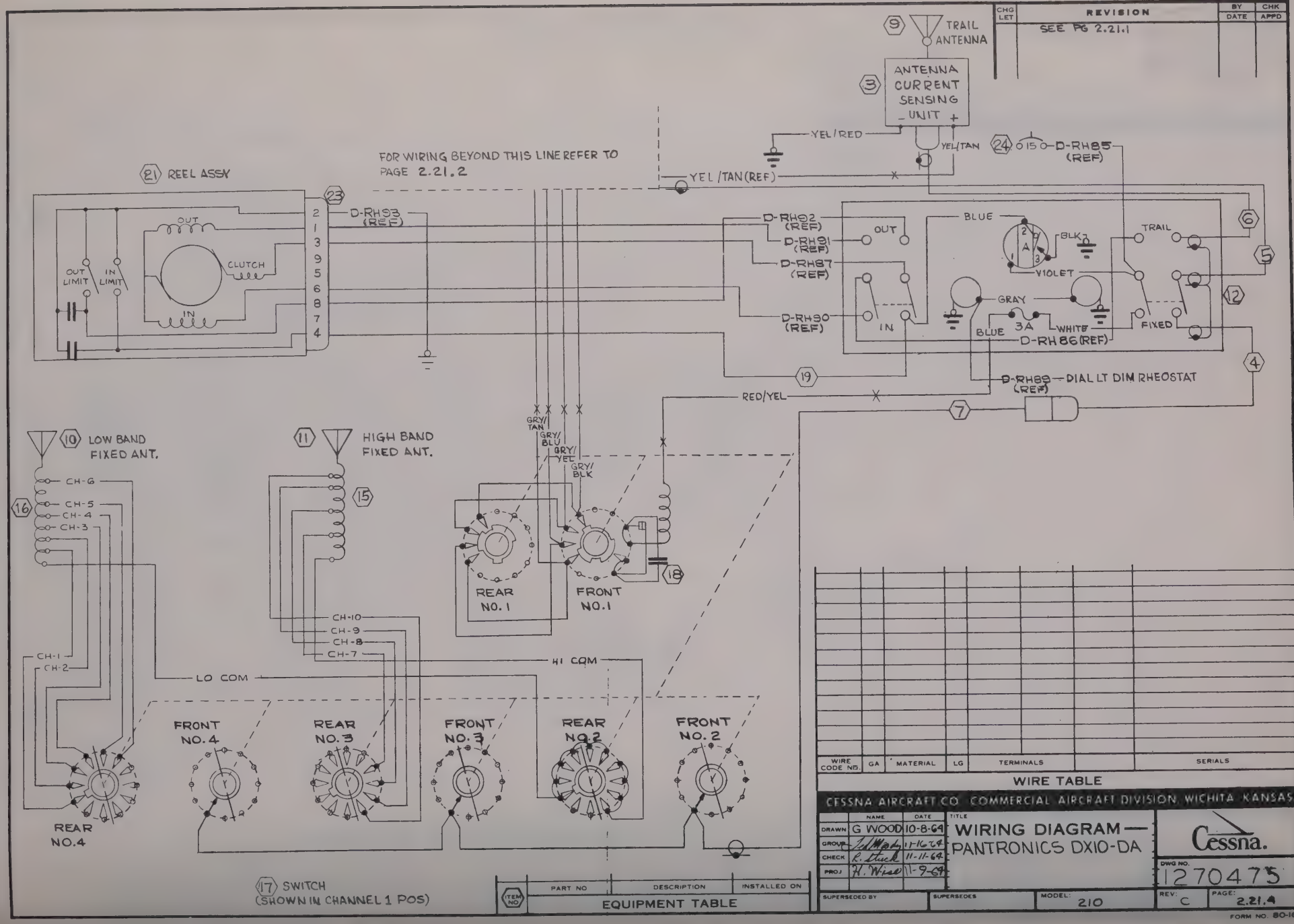


| CHG LET | REVISION | BY DATE | CHK APPD |
|---|---|---|---|
| | SEE PG 2.21.1 | | |

| ITEM NO | PART NO | DESCRIPTION | INSTALLED ON |
|---|---|---|---|

EQUIPMENT TABLE

| WIRE CODE NO. | GA | MATERIAL | LG | TERMINALS | SERIALS |
|---|---|---|---|---|---|

WIRE TABLE

CESSNA AIRCRAFT CO COMMERCIAL AIRCRAFT DIVISION, WICHITA KANSAS

| | NAME | DATE |
|---|---|---|
| DRAWN | G WOOD | 10-8-69 |
| GROUP | | 11-16-69 |
| CHECK | R. Stuck | 11-11-69 |
| PROJ | H. Wise | 11-9-69 |

TITLE: WIRING DIAGRAM — PANTRONICS DX10-DA

Cessna.

DWG NO. 1270475

| SUPERSEDED BY | SUPERSEDES | MODEL: 210 | REV: C | PAGE: 2.21.4 |
|---|---|---|---|---|

FORM NO. 80-161

| | | | |
|---|---|---|---|
| NOTE 2. | (SR 4731) | | |

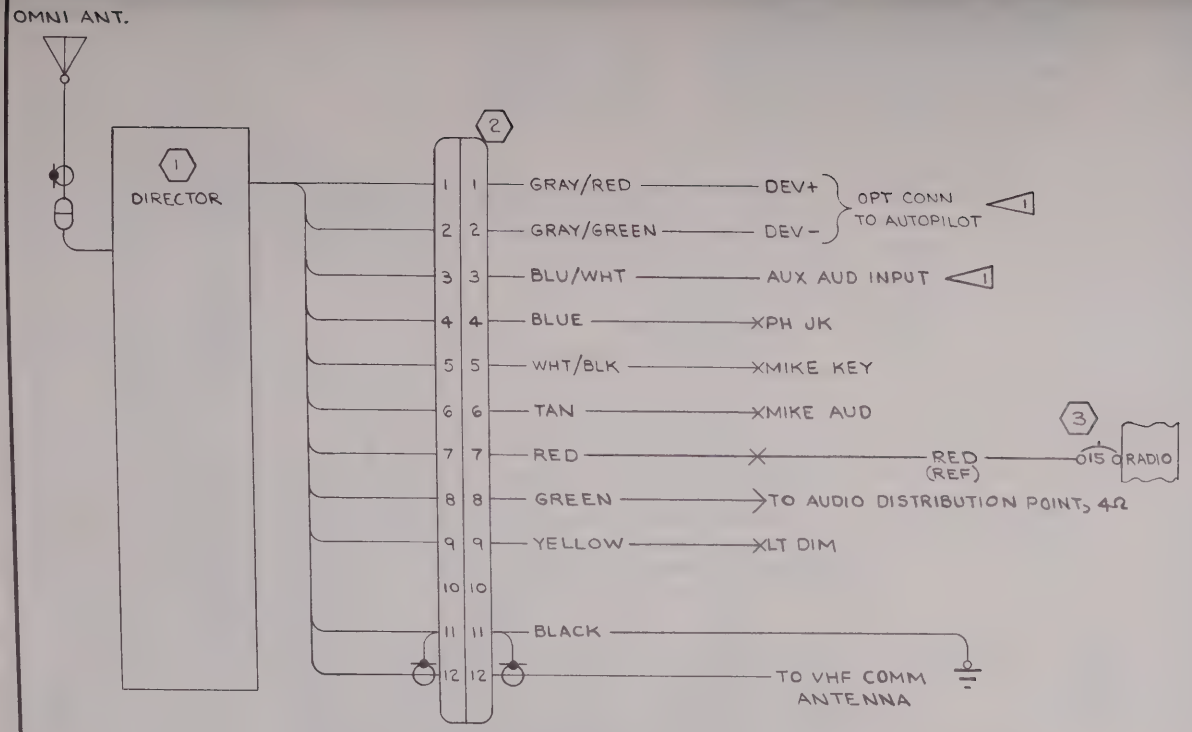


NOTES:

1. S-1557-1 CAP REPLACED WITH S-1367-1-8 TERMINAL WHEN COMBINED WITH OTHER RADIOS.
2. THE KX-150B & KX-150BE ARE ELECTRICALLY & MECHANICALLY INTERCHANGEABLE WITH KX-150A & KX-150AE.

| WIRE CODE NO. | GA | MATERIAL | LG | TERMINALS | | SERIALS |
|---|---|---|---|---|---|---|
| GRY/RED | 22 | S-1460-22-8-2 | | SOLDER | S-1557-1 | |
| GRY/GRN | 22 | S-1460-22-8-5 | | | S-1557-1 | |
| BLU/WHT | 22 | S-1460-22-6-9 | | | S-1557-1 | |
| BLACK | 16 | S-1460-16-0 | | | S-1367-2-8 | |
| RED | 16 | S-1460-16-2 | | | S-1370-2 | |
| YELLOW | 18 | S-1460-18-4 | | | S-1370-1 | |
| WHT/BLK | 22 | S-1460-22-9-0 | | | S-1370-1 | |
| TAN | 22 | S-1460-22-10 | | | S-1370-1 | |
| GREEN | 20 | S-1460-20-5 | | | S-341-2 | |
| BLUE | 22 | S-1460-22-6 | | SOLDER | S-1370-1 | |

WIRE TABLE

| ITEM NO | PART NO. | DESCRIPTION | INSTALLED ON |
|---|---|---|---|
| 3 | S-1360-15 | CIRCUIT BREAKER | |
| 2 | 0501046-01 | INSTL KIT (KG) | |
| 1 | KX-150B | DIRECTOR (KG) | |

EQUIPMENT TABLE

CESSNA AIRCRAFT CO., COMMERCIAL AIRCRAFT DIVISION, WICHITA, KANSAS

| | NAME | DATE |
|---|---|---|
| DRAWN | KIDDER | 11-13-64 |
| GROUP | | |
| CHECK | R. Stuck | 11-24-64 |
| PROJ | H. Wise | 11-24-64 |

TITLE: WIRING DIAGRAM— KING KX-150B OR KX-150BE

Cessna

DWG NO: 1270475

| SUPERSEDED BY: | SUPERSEDES: 1270405 | PAGE: 17-9-2 | MODEL: 210 | REV: A | PAGE: 2.24.1 |
|---|---|---|---|---|---|

FORM NO 80 161A

NOTE:

1. CONNECTORS ARE PART OF NARCO CONNECTOR KIT EL-2052. KIT EL-2052 NOT SUPPLIED WITH MARK 12 INSTL KIT.
2. NARCO PLUG NO. K-91116-1 SUPPLIED WITH MARK 12 INSTL KIT.
3. MS3106A-20-27S PLUG & MS3057-12 CLAMP SUPPLIED WITH VOA-4 OR VOA-5 INDICATOR.
4. WIRE MATERIAL PER S-1460 EXCEPT AS NOTED.

| CHG LET | REVISION | BY / DATE | CHK / APPD |
|---|---|---|---|
| | | | |

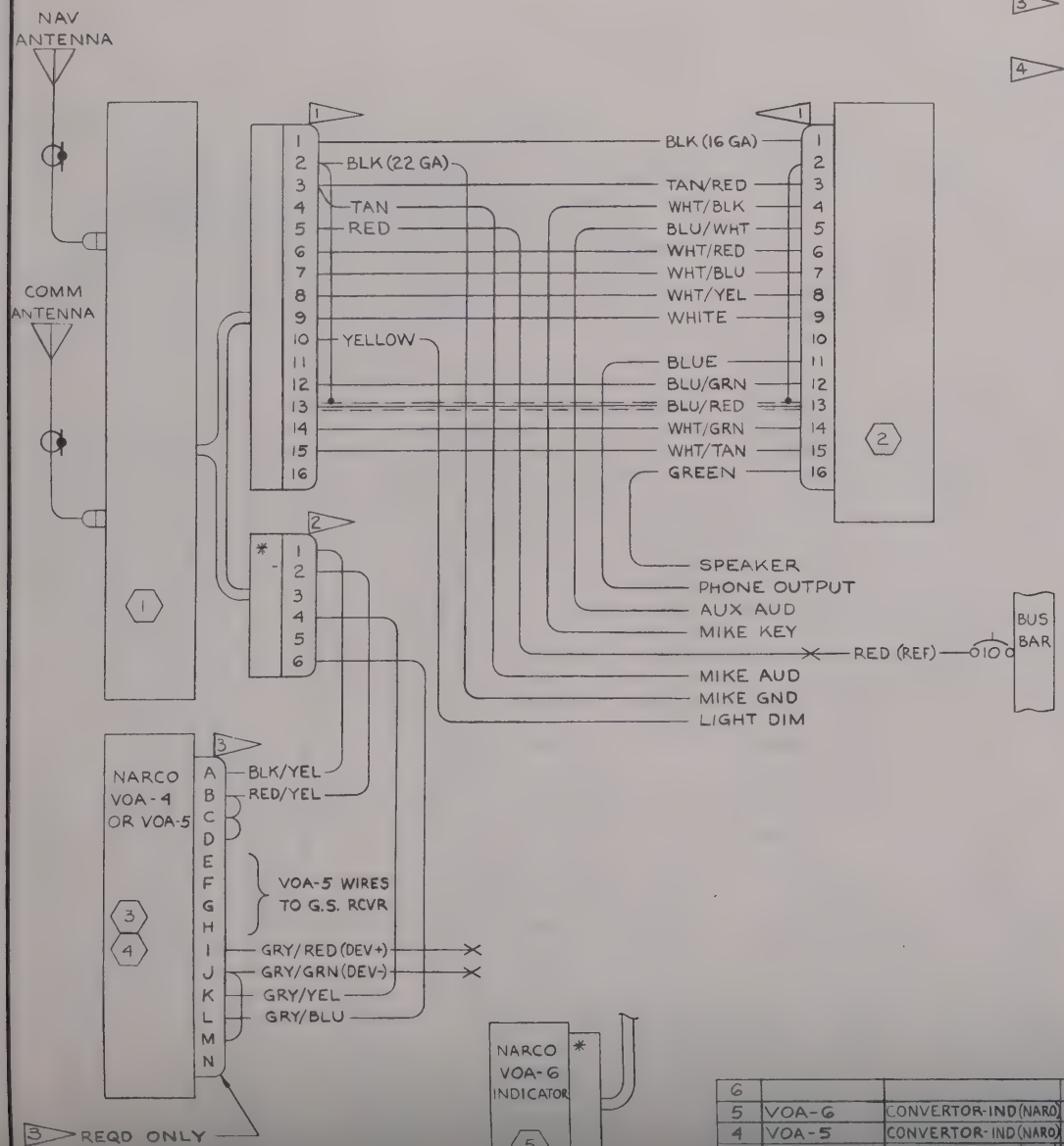


| | | | | | | | | |
|---|---|---|---|---|---|---|---|---|
| GREEN | 20 | -20-5 | | SOLDER | | | | |
| GRY/BLU | 22 | -22-8-6 | | | SOLDER | | | |
| GRY/YEL | 22 | -22-8-4 | | | SOLDER | | | |
| GRY/GRN | 22 | -22-8-5 | | | S-1557-1 | | | |
| GRY/RED | 22 | -22-8-2 | | | S-1557-1 | | | |
| RED/YEL | 22 | -22-2-4 | | | SOLDER | | | |
| BLK/YEL | 22 | -22-0-4 | | | SOLDER | | | |
| BLACK | 22 | -22-0 | | | | | | |
| TAN | 22 | -22-10 | | | | | | |
| WHT/TAN | 22 | -22-9-10 | | | SOLDER | | | |
| WHT/GRN | 22 | -22-9-5 | | | SOLDER | | | |
| BLU/RED | 22S | S-1461-22-6-2 | | | SOLDER | | | |
| BLU/GRN | 22 | -22-6-5 | | | SOLDER | | | |
| BLUE | 22 | -22-6 | | | | | | |
| WHT/YEL | 22 | -22-9-4 | | | SOLDER | | | |
| WHT/BLU | 22 | -22-9-6 | | | SOLDER | | | |
| WHT/RED | 22 | -22-9-2 | | | SOLDER | | | |
| BLU/WHT | 22 | -22-6-9 | | | S-1557-1 | | | |
| WHT/BLK | 22 | -22-9-0 | | | | | | |
| TAN/RED | 22 | -22-10-2 | | | SOLDER | | | |
| YELLOW | 18 | -18-4 | | | | | | |
| RED | 16 | -16-2 | | | S-1370-2 | | | |
| BLACK | 16 | -16-0 | | | SOLDER | | | |
| WHITE | 14 | -14-9 | | SOLDER | SOLDER | | | |
| WIRE CODE NO. | GA | MATERIAL | LG | TERMINALS | | | | SERIALS |

4 WIRE TABLE

| | | |
|---|---|---|
| 6 | | |
| 5 | VOA-6 | CONVERTOR-IND (NARO) |
| 4 | VOA-5 | CONVERTOR-IND (NARO) |
| 3 | VOA-4 | CONVERTOR-IND (NARO) |

CESSNA AIRCRAFT CO., COMMERCIAL AIRCRAFT DIVISION, WICHITA, KANSAS

| | NAME | DATE |
|---|---|---|
| DRAWN | G WOOD | 12-8-64 |
| GROUP | | 1-16-65 |

TITLE: WIRING DIAGRAM— NARCO MARK 12

(SR4455)

| CHG LET | REVISION | BY DATE | CHK APPD |
|---|---|---|---|
| | | | |

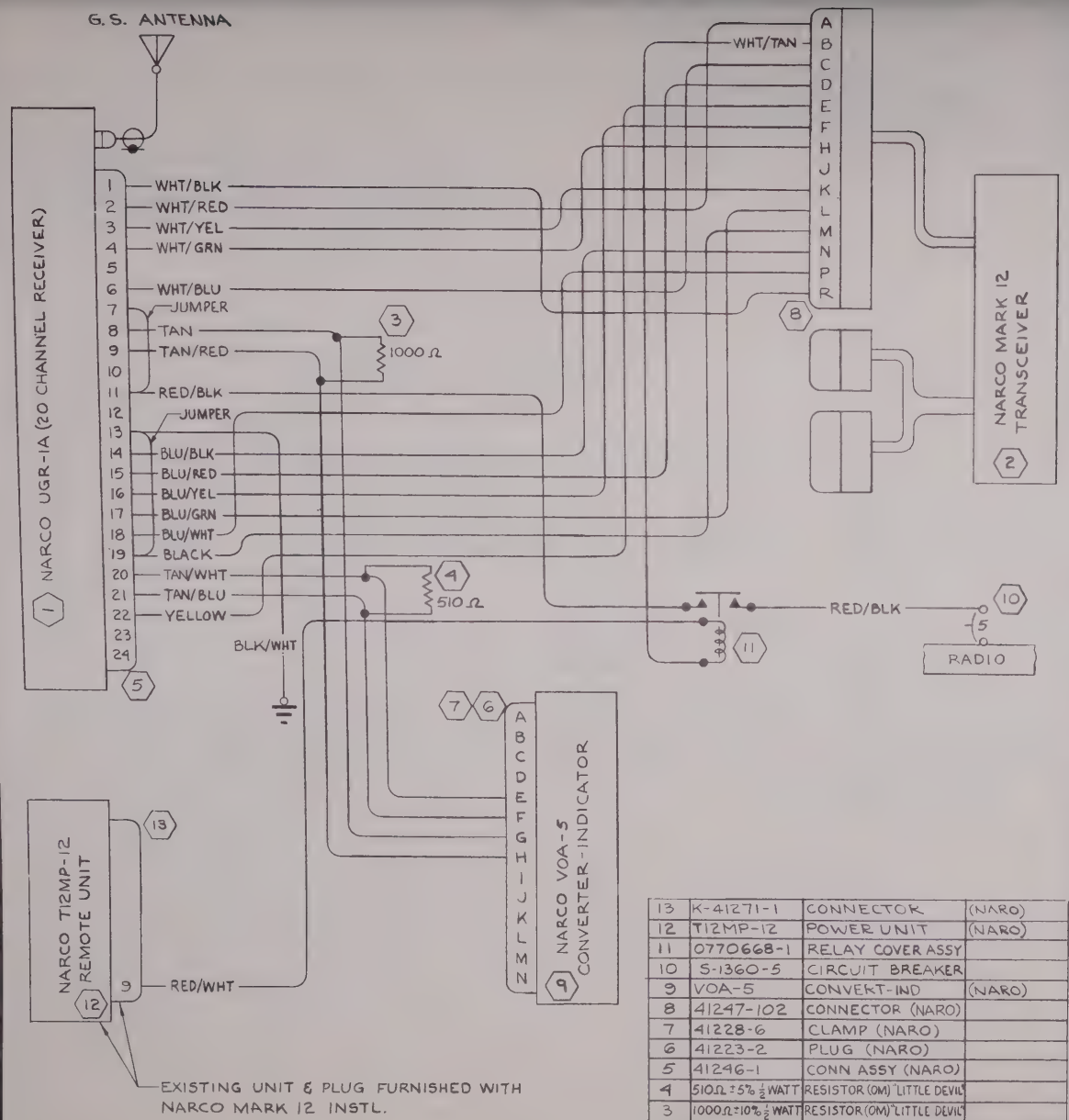


| ITEM NO | PART NO. | DESCRIPTION | INSTALLED ON |
|---|---|---|---|
| 13 | K-41271-1 | CONNECTOR | (NARO) |
| 12 | T12MP-12 | POWER UNIT | (NARO) |
| 11 | 0770668-1 | RELAY COVER ASSY | |
| 10 | S-1360-5 | CIRCUIT BREAKER | |
| 9 | VOA-5 | CONVERT-IND | (NARO) |
| 8 | 41247-102 | CONNECTOR (NARO) | |
| 7 | 41228-6 | CLAMP (NARO) | |
| 6 | 41223-2 | PLUG (NARO) | |
| 5 | 41246-1 | CONN ASSY (NARO) | |
| 4 | 510Ω ±5% ½ WATT | RESISTOR (OM) "LITTLE DEVIL" | |
| 3 | 1000Ω ±10% ½ WATT | RESISTOR (OM) "LITTLE DEVIL" | |
| 2 | MARK 12 | TRANSCEIVER | (NARO) |
| 1 | UGR-1A 20CH | RECEIVER (NARO) | |

EQUIPMENT TABLE

| WIRE CODE NO | GA | MATERIAL | LG | TERMINALS | | | SERIALS |
|---|---|---|---|---|---|---|---|
| TAN/BLU | 22 | S-1460-22-10-6 | | SOLDER | SOLDER | | |
| TAN/WHT | 22 | S-1460-22-10-9 | | | | | |
| BLACK | 22 | S-1460-22-0 | | | | | |
| BLU/WHT | 22 | S-1460-22-6-9 | | | | | |
| BLU/GRN | 22 | S-1460-22-6-5 | | | | | |
| BLU/YEL | 22 | S-1460-22-6-4 | | | | | |
| BLU/RED | 22 | S-1460-22-6-2 | | | | | |
| BLU/BLK | 22 | S-1460-22-6-0 | | | | | |
| TAN/RED | 22 | S-1460-22-10-2 | | | | | |
| TAN | 22 | S-1460-22-10 | | | | | |
| WHT/BLU | 22 | S-1460-22-9-6 | | | | | |
| WHT/GRN | 22 | S-1460-22-9-5 | | | | | |
| WHT/YEL | 22 | S-1460-22-9-4 | | | | | |
| WHT/RED | 22 | S-1460-22-9-2 | | | | | |
| WHT/BLK | 22 | S-1460-22-9-0 | | | | | |
| WHT/TAN | 22 | S-1460-22-9-10 | | | | | |
| RED/BLK | 18 | S-1460-18-2-0 | | | | | |
| RED/WHT | 18 | S-1460-18-2-9 | | | | | |
| YELLOW | 18 | S-1460-18-4 | | | SOLDER | | |
| BLK/WHT | 18 | S-1460-18-0-9 | | | S-1367-1-8 | | |
| RED/BLK | 18 | S-1460-18-2-0 | | SOLDER | S-1367-1-6 | | |

WIRE TABLE

CESSNA AIRCRAFT CO. COMMERCIAL AIRCRAFT DIVISION, WICHITA, KANSAS

| | NAME | DATE |
|---|---|---|
| DRAWN | RIDDER | 11-21-64 |
| GROUP | Ted Moody | 1-9-65 |
| CHECK | R. Stuck | 1-6-65 |
| PROJ | Y. Wise | 1-5-65 |

TITLE: WIRING DIAGRAM — NARCO UGR-1A GLIDESLOPE WITH NARCO MARK 12 & VOA-5

Cessna.

DWG NO 1270475

| SUPERSEDED BY | SUPERSEDE | PAGE | MODEL | REV | PAGE |
|---|---|---|---|---|---|
| | 1270405 | 17.21 | 210 | | 2.26.1 |

FORM NO. 80-161

| CHG LET | REVISION | BY / DATE | CHK / APPD |
|---|---|---|---|
| | | | |

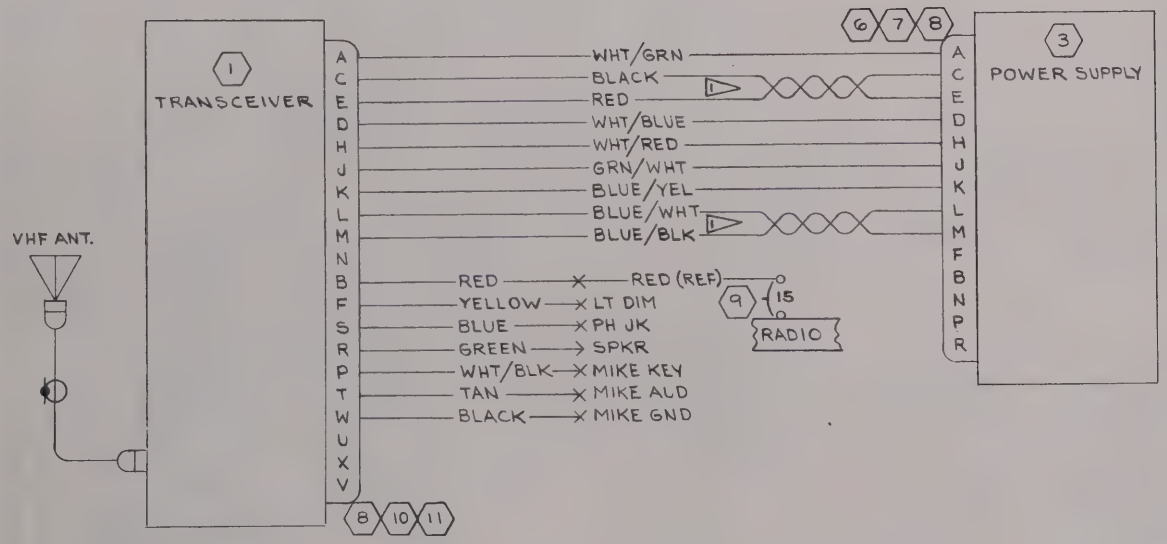


NOTES:

1. WIRES FLAGGED THUS TO BE TWISTED TOGETHER TO FORM A TWISTED PAIR.
2. WIRE MATERIAL PER S-1460.

| | | | |
|---|---|---|---|
| 11 | 030-1010-00 | HOOD (KG) | |
| 10 | 030-2002-00 | RECEPTACLE (KG) | |
| 9 | S-1360-15 | CIRCUIT BREAKER | |
| 8 | 030-1008-00 | LEVER & PIVOT ASSY (KG) | |
| 7 | 030-1009-00 | HOOD (KG) | |
| 6 | 030-2000-00 | RECEPTACLE (KG) | |
| 5 | | | |
| 4 | | | |

| WIRE CODE NO. | GA | MATERIAL | LG | TERMINALS | | SERIALS |
|---|---|---|---|---|---|---|
| BLACK | 22 | -22-0 | | SOLDER | S-1370-1 | |
| TAN | 22 | -22-10 | | | S-1370-1 | |
| WHT/BLK | 22 | -22-9-0 | | | S-1370-1 | |
| GREEN | 20 | -20-5 | | | S-341-2 | |
| BLUE | 22 | -22-6 | | | S-1370-1 | |
| YELLOW | 18 | -18-4 | | | S-1370-1 | |
| RED | 16 | -16-2 | | | S-1370-2 | |
| BLU/BLK | 22 | -22-6-0 | | | SOLDER | |
| BLU/WHT | 22 | -22-6-9 | | | | |
| BLU/YEL | 22 | -22-6-4 | | | | |
| GRN/WHT | 20 | -20-5-9 | | | | |
| WHT/RED | 22 | -22-9-2 | | | | |
| WHT/BLU | 22 | -22-9-6 | | | | |
| RED | 16 | -16-2 | | | | |
| BLACK | 16 | -16-0 | | | | |
| WHT/GRN | 22 | -22-9-5 | | SOLDER | SOLDER | |

2 WIRE TABLE

CESSNA AIRCRAFT CO., COMMERCIAL AIRCRAFT DIVISION, WICHITA, KANSAS

| | NAME | DATE | TITLE |
|---|---|---|---|
| DRAWN | KIDDER | 12-11-64 | WIRING DIAGRAM— |

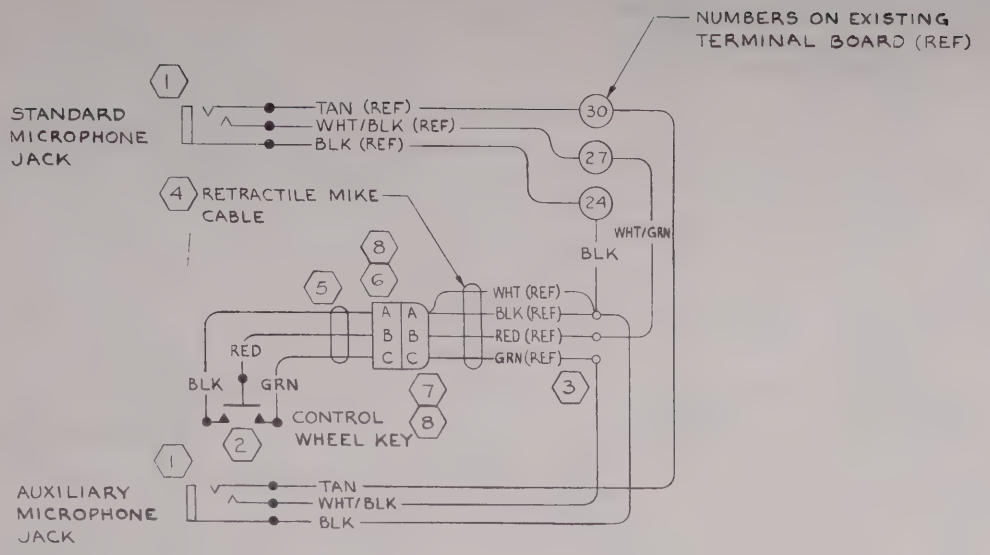


NOTES:

1. WIRE MATERIAL PER S-1460 EXCEPT AS NOTED.

| ITEM NO | PART NO. | DESCRIPTION | INSTALLED ON |
|---|---|---|---|
| 8 | SM2H | HOOD (WIQ) | |
| 7 | SM3S | RECEPTACLE (WIQ) | |
| 6 | SM3P | PLUG (WIQ) | |
| 5 | 8443 | CABLE (BDN) | |
| 4 | 8409 | RETRACTILE CABLE (BDN) | |
| 3 | AN3436-2-3 | TERMINAL BLOCK | |
| 2 | A8002 | SWITCH (HETH) | |
| 1 | S-1102-1 | JACK | |

EQUIPMENT TABLE

| WIRE CODE NO. | GA | MATERIAL | LG | TERMINALS | | SERIALS |
|---|---|---|---|---|---|---|
| WHT/BLK | 22 | -22-9-0 | | SOLDER | S-1367-1-6 | |
| TAN | 22 | -22-10 | | SOLDER | S-1367-1-8 | |
| WHT/GRN | 22 | -22-9-5 | | S-1367-1-6 | S-1367-1-8 | |
| BLACK | 22 | -22-0 | | S-1367-1-8 | S-1367-1-6 | |
| BLACK | 22 | -22-0 | | SOLDER | S-1367-1-6 | |

WIRE TABLE

CESSNA AIRCRAFT CO., COMMERCIAL AIRCRAFT DIVISION, WICHITA, KANSAS

| | NAME | DATE |
|---|---|---|
| DRAWN | G WOOD | 4-1-65 |
| GROUP | [illegible] | 4-2-65 |
| CHECK | [illegible] | 4-2-65 |
| PROJ | [illegible] | 4-5-65 |

TITLE: WIRING DIAGRAM— AUXILIARY MICROPHONE JACK & CONTROL WHEEL KEY

Cessna

DWG NO: 1270475

SUPERSEDED BY:

SUPERSEDES:

MODEL: 210, T210

REV: A

PAGE: 2.28

FORM NO 80-161A

(SR4832)

| CHG LET | REVISION | BY / DATE | CHK / APPD |
|---|---|---|---|
| | | | |

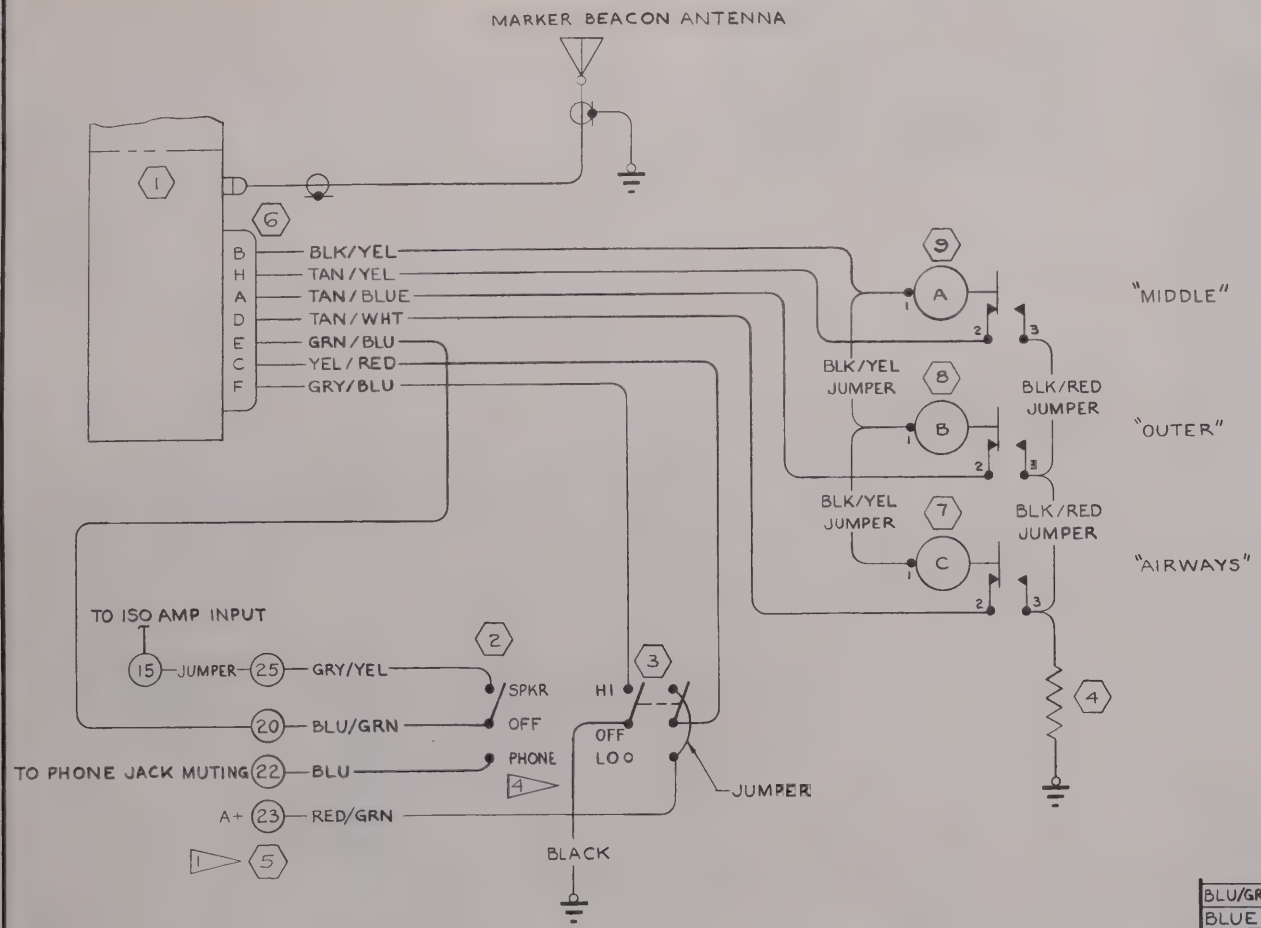


NOTES:

1. NUMBERS IN CIRCLES ARE NUMBERS ON 0770714-1 TERMINAL BLOCK ASSY.
2. WIRE MATERIAL PER S-1460.
3. TERMINAL BLOCK NUMBERS TO BE STAMPED ON WIRE PER CES-1015.
4. "PHONE" & "LO" FUNCTION TO BE ON KEYWAY SIDE OF SWITCH.

| | | | |
|---|---|---|---|
| 9 | MS25041-4-328 | LIGHT ASSY | |
| 8 | MS25041-10-328 | LIGHT ASSY | |
| 7 | MS25041-1-328 | LIGHT ASSY | |
| 6 | 28371-0007 | PLUG (ARC) | |
| 5 | 0770714-1 | TERM. BLOCK ASSY | |
| 4 | 40Ω, 3 WATT | RESISTOR (OM) | |
| 3 | MST-205P | SWITCH (AELM) | |

| WIRE CODE NO. | GA | MATERIAL | LG | TERMINALS | | SERIALS |
|---|---|---|---|---|---|---|
| BLU/GRN | 22 | -22-6-5 | | SOLDER | S-1367-1-8 | |
| BLUE | 22 | -22-6 | | SOLDER | S-1367-1-8 | |
| BLACK | 22 | -22-0 | | SOLDER | S-1367-1-8 | |
| RED/GRN | 20 | -20-2-5 | | | S-1367-1-8 | |
| GRY/YEL | 22 | -22-8-4 | | | S-1367-1-8 | |
| GRY/BLU | 22 | -22-8-6 | | | SOLDER | |
| YEL/RED | 20 | -20-4-2 | | | SOLDER | |
| GRN/BLU | 20 | -20-5-6 | | | S-1367-1-8 | |
| TAN/WHT | 22 | -22-10-9 | | | SOLDER | |
| TAN/BLU | 22 | -22-10-6 | | | SOLDER | |
| TAN/YEL | 22 | -22-10-4 | | | SOLDER | |
| BLK/YEL | 22 | -22-0-4 | | SOLDER | SOLDER | |

2

WIRE TABLE

CESSNA AIRCRAFT CO., COMMERCIAL AIRCRAFT DIVISION, WICHITA, KANSAS

| | NAME | DATE |
|---|---|---|
| DRAWN | J. WOOD | 5-18-65 |
| GROUP | H. Wire | 5-19-65 |

TITLE: WIRING DIAGRAM—MARKER BEACON

Cessna

CONNECTIONS SHOWN ARE FOR BOTTOM-MOUNTED LOOP ANTENNA & TOP-MOUNTED SENSE ANTENNA.

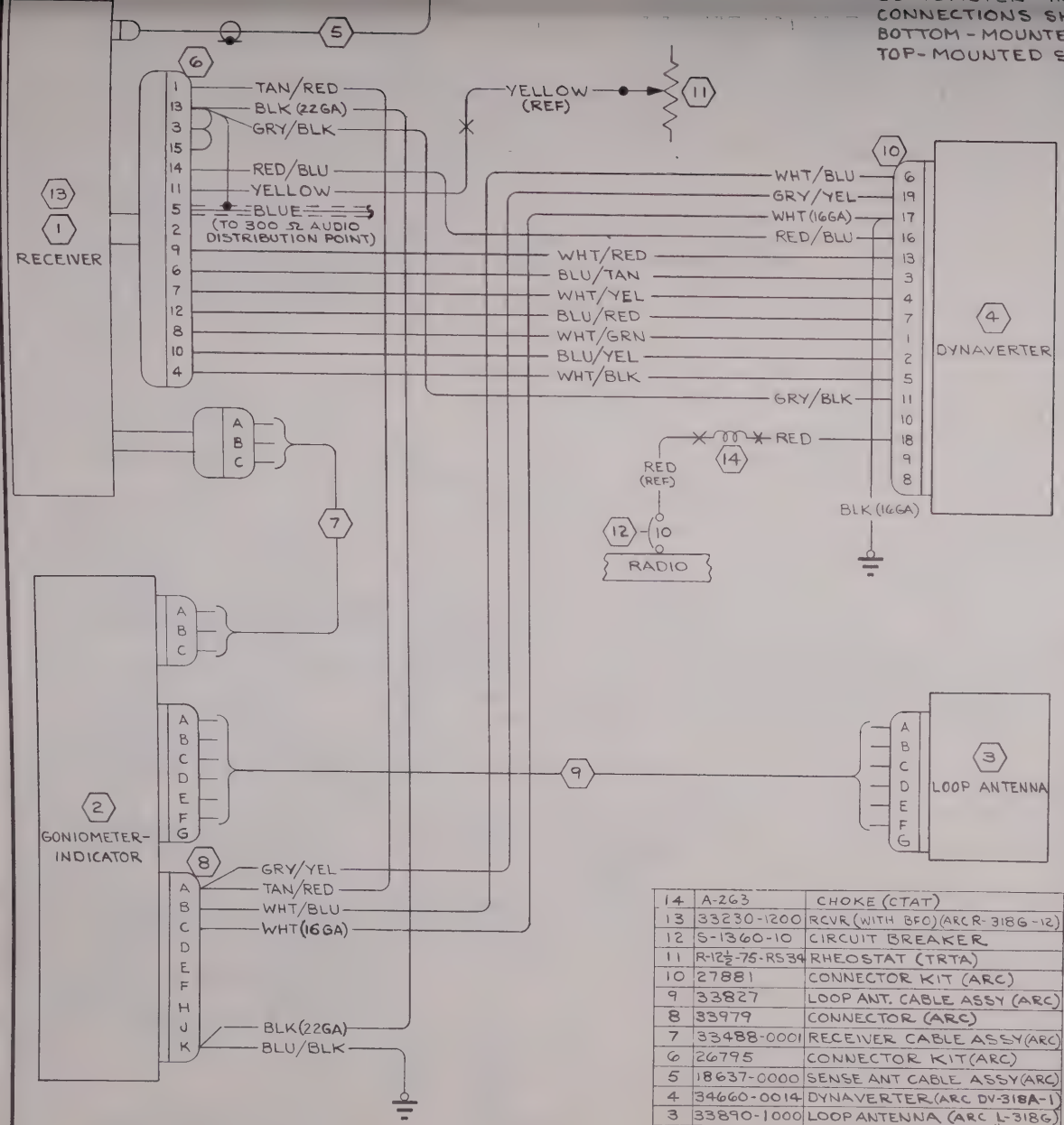


| ITEM NO | PART NO. | DESCRIPTION | INSTALLED ON |
|---|---|---|---|
| 14 | A-263 | CHOKE (CTAT) | |
| 13 | 33230-1200 | RCVR (WITH BFO) (ARC R-318G-12) | |
| 12 | S-1360-10 | CIRCUIT BREAKER | |
| 11 | R-12½-75-RS34 | RHEOSTAT (TRTA) | |
| 10 | 27881 | CONNECTOR KIT (ARC) | |
| 9 | 33827 | LOOP ANT. CABLE ASSY (ARC) | |
| 8 | 33979 | CONNECTOR (ARC) | |
| 7 | 33488-0001 | RECEIVER CABLE ASSY (ARC) | |
| 6 | 26795 | CONNECTOR KIT (ARC) | |
| 5 | 18637-0000 | SENSE ANT CABLE ASSY (ARC) | |
| 4 | 34660-0014 | DYNAVERTER (ARC DV-318A-1) | |
| 3 | 33890-1000 | LOOP ANTENNA (ARC L-318G) | |
| 2 | 33550 | GONIOMETER-INDICATOR (ARC TYPE IN-21C) | |
| 1 | 33230-1000 | RECEIVER (ARC TYPE R-318G-10) | |

EQUIPMENT TABLE

| WIRE CODE NO. | GA | MATERIAL | LG | TERMINALS | | | SERIALS |
|---|---|---|---|---|---|---|---|
| BLACK | 16 | -16-0 | | SOLDER | S-1367-2-8 | | |
| RED | 16 | -16-2 | | | S-1370-2 | | |
| WHT/BLK | 22 | -22-9-0 | | | SOLDER | | |
| BLU/YEL | 22 | -22-6-4 | | | | | |
| WHT/GRN | 22 | -22-9-5 | | | | | |
| BLU/RED | 22 | -22-6-2 | | | | | |
| WHT/YEL | 22 | -22-9-4 | | | | | |
| BLU/TAN | 22 | -22-6-10 | | | | | |
| WHT/RED | 22 | -22-9-2 | | | | | |
| GRY/BLK | 22 | -22-8-0 | | | | | |
| RED/BLU | 16 | -16-2-6 | | | SOLDER | | |
| YELLOW | 20 | -20-4 | | | S-1370-1 | | |
| BLUE | 22S | S-1461-22-6 | | | | | |
| GRY/YEL | 22 | -22-8-4 | | | SOLDER | | |
| TAN/RED | 22 | -22-10-2 | | | | | |
| WHT/BLU | 22 | -22-9-6 | | | | | |
| BLACK | 22 | -22-0 | | | | | |
| WHITE | 16 | -16-9 | | | SOLDER | | |
| BLU/BLK | 22 | -22-6-0 | | SOLDER | S-1367-1-8 | | |

1 WIRE TABLE

CESSNA AIRCRAFT CO., COMMERCIAL AIRCRAFT DIVISION, WICHITA, KANSAS

| | NAME | DATE |
|---|---|---|
| DRAWN | RIDDER | 4-3-65 |
| GROUP | H. Wise | 5-14-65 |
| CHECK | [illegible] | 5-17-65 |
| PROJ | [illegible] | 5-21-65 |

TITLE: WIRING DIAGRAM— CESSNA ADF 500 (GONIOMETER) (ARC TYPE 318G)

Cessna®

DWG NO: 1270475

SUPERSEDED BY:

SUPERSEDES: 1270475 PAGE 2.15.1

MODEL: 210 & T210

REV: A

PAGE: 2.31.1

(SR4661)
(SR4637)

| CHG LET | REVISION | BY / DATE | CHK / APPD |
|---|---|---|---|
| | | | |

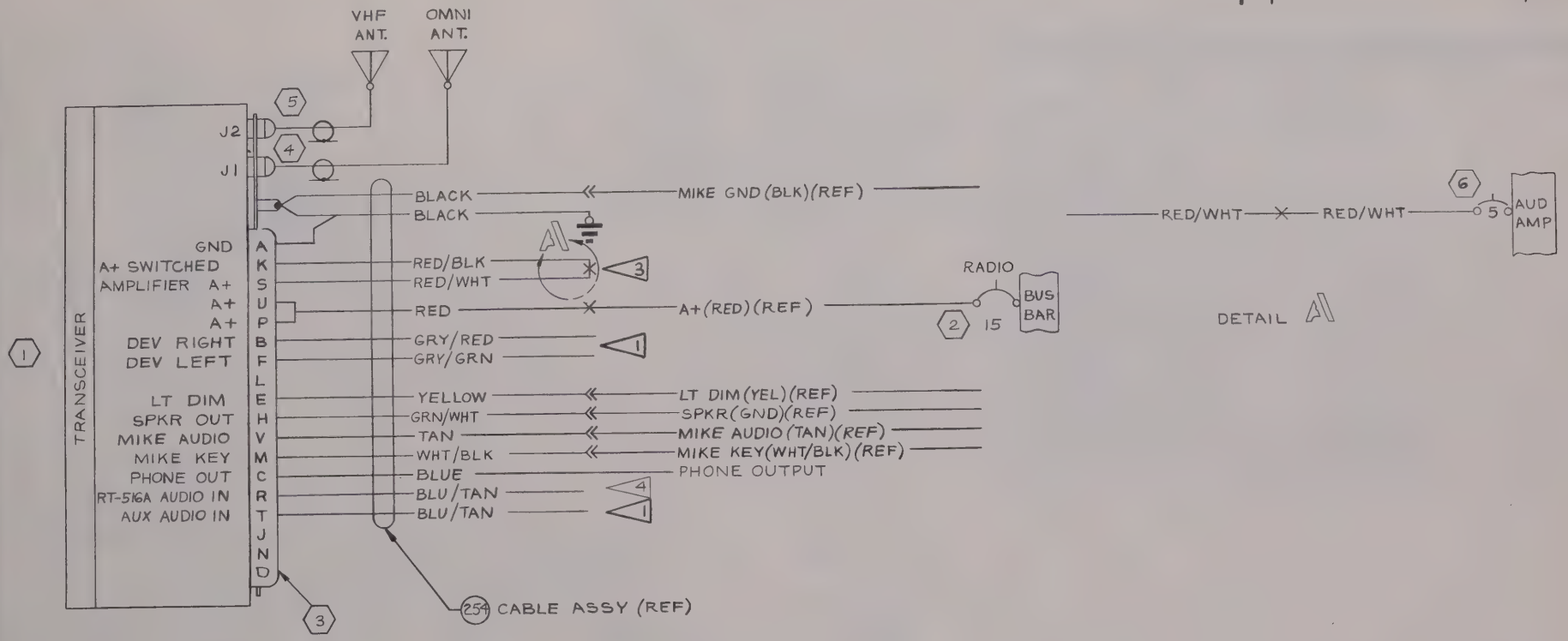


NOTES:

1. WIRES NOT USED SHALL BE CAPPED AND TIED INTO A BUNDLE
2. WIRE MATERIAL PER S-1460
3. WHEN THIS SET IS INSTALLED AS A SINGLE RADIO, CONNECT PINS "S" & "K" TOGETHER AS SHOWN. WHEN INSTALLED IN CONJUNCTION WITH ANOTHER RADIO SET SUCH AS AN ADF OR A NAV-OMNI, CONNECT PIN "S" AS SHOWN IN DETAIL "A"
4. WHEN THE NAV/COM IS INSTALLED WITH OTHER RADIO UNITS, THE BLUE WIRE CONNECTS TO THE WIPER OF A SPKR PHONE SWITCH & BLU/TAN WIRE (PIN R) CONNECTS TO THE SPKR TERMINAL OF SPKR-PHONE SWITCH. ON SINGLE INSTALLATIONS, THE BLU/TAN WIRE (PIN R) CONNECTS TO BLU WIRE.

(SEE PAGE 2.32.1.1 FOR CONTINUATION OF NOTES)

| | | | |
|---|---|---|---|
| 6 | S-1360-5 | CKT BKR | |
| 5 | 29753 | CONNECTOR (ARC) | |
| 4 | 29752 | CONNECTOR (ARC) | |
| 3 | 29747-0018 | CONNECTOR (ARC) | |

| WIRE CODE NO. | GA | MATERIAL | LG | TERMINALS | | SERIALS |
|---|---|---|---|---|---|---|
| BLU/TAN | 22 | -22-6-10 | | SOLDER | S-1557-1 | |
| BLU/TAN | 22 | -22-6-10 | | | | |
| BLUE | 22 | -22-6 | | | | |
| WHT/BLK | 22 | -22-9-0 | | | S-341-2 | |
| TAN | 22 | -22-10 | | | | |
| GRN/WHT | 20 | -20-5-9 | | | | |
| YELLOW | 18 | -18-4 | | | S-341-2 | |
| GRY/GRN | 22 | -22-8-5 | | | S-1557-1 | |
| GRY/RED | 22 | -22-8-2 | | | S-1557-1 | |
| RED | 16 | -16-2 | | | S-1370-2 | |
| RED/BLK | 18 | -18-2-0 | | | S-1370-1 | |
| RED/WHT | 18 | -18-2-9 | | | | |
| BLACK | 16 | -16-0 | | | S-1367-1-10 | |
| BLACK | 22 | -22-0 | | SOLDER | S-341-2 | |

2 WIRE TABLE

CESSNA AIRCRAFT CO. COMMERCIAL AIRCRAFT DIVISION WICHITA KANSAS

| | NAME | DATE |
|---|---|---|
| DRAWN | G WOOD | 6-4-65 |
| GROUP | | 6-7-65 |

TITLE: WIRING DIAGRAM— CESSNA NAV-COMM

Cessna

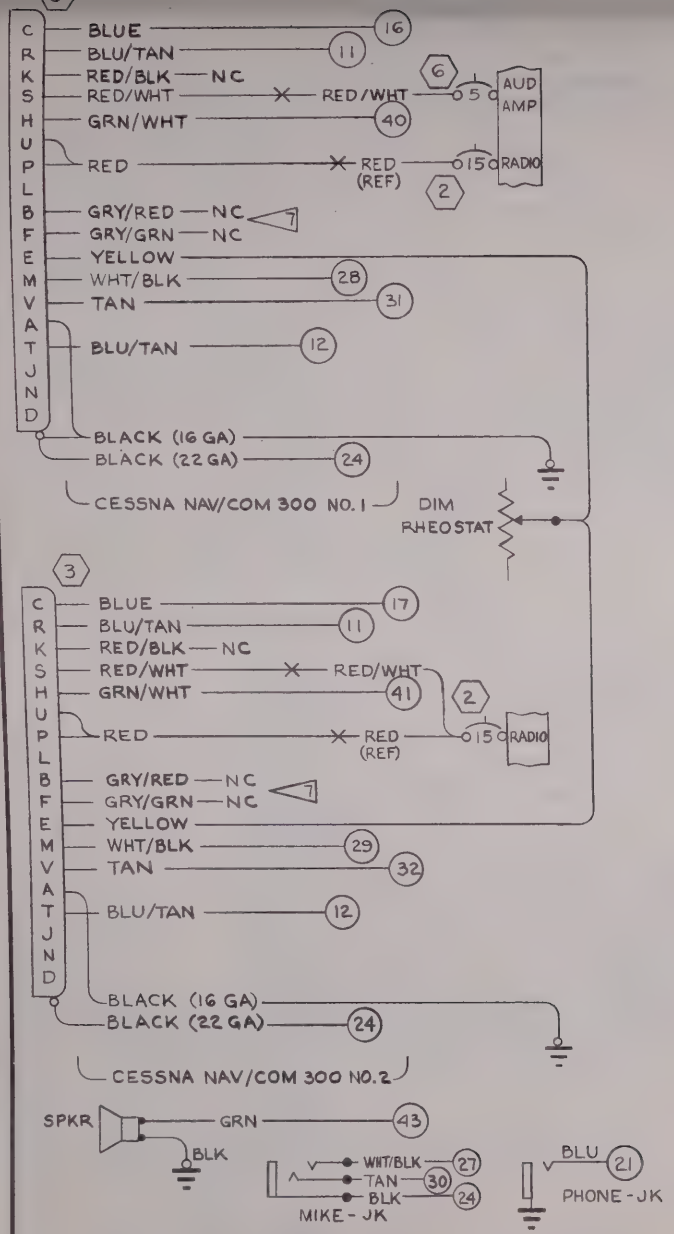


TYPICAL INTERCONNECTION OF DUAL CESSNA NAV/COM 300 SYSTEMS

6. CESSNA NAV/COM 300 AMPLIFIERS ARE OPERATED "ALWAYS HOT". SPEAKER OUTPUT FROM EACH SYSTEM CONNECTS EITHER TO A 5 OHM 10 WATT DUMMY LOAD OR THE SHIPS SPEAKER AS DETERMINED BY THE TRANSMITTER SELECTOR SWITCH.
7. WHEN AN OPTIONAL NAV-O-MATIC AUTOPILOT WITH OMNI COUPLER IS COMBINED WITH A CESSNA NAV/COM 300, THE GRY/RED WIRE CONNECTS TO DEV + CIRCUIT & THE GRY/GRN WIRE CONNECTS TO DEV- CIRCUIT.

| WIRE CODE NO. | GA | MATERIAL | LG | TERMINALS | | SERIALS |
|---|---|---|---|---|---|---|
| | | | | | | |

WIRE TABLE

| ITEM NO | PART NO. | DESCRIPTION | INSTALLED ON |
|---|---|---|---|
| | | | |

EQUIPMENT TABLE

CESSNA AIRCRAFT CO COMMERCIAL AIRCRAFT DIVISION WICHITA KANSAS

| | NAME | DATE |
|---|---|---|
| DRAWN | G WOOD | 6-7-65 |
| GROUP | J. Wine | 6-7-65 |
| CHECK | R. Hyde | 6-9-65 |
| PROJ | W. McCarter | 6-11-65 |

TITLE: WIRING DIAGRAM— CESSNA NAV/COM 300 (ARC TYPE 51GA)

Cessna.

DWG NO: 1270475

| SUPERSEDED BY: | SUPERSEDES: | MODEL: | REV: | PAGE: |
|---|---|---|---|---|
| | | 210, T210 | | 2.32.1.1 |

FORM NO 80-161A

(SR4637)
(SR4661)

| CHG LET | REVISION | BY DATE | CHK APPD |
|---|---|---|---|
| | | | |

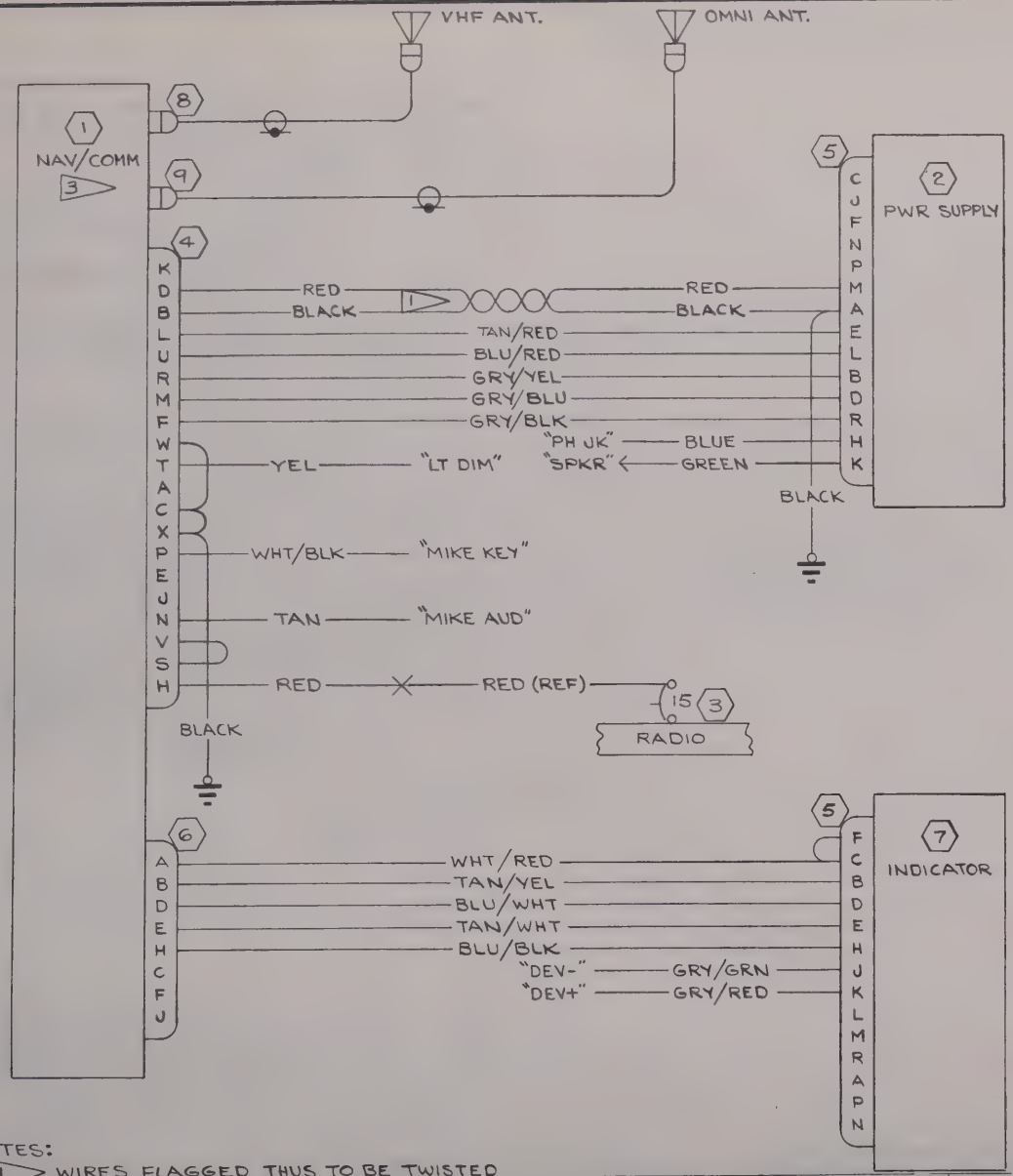


NOTES:

1. WIRES FLAGGED THUS TO BE TWISTED TOGETHER TO FORM A TWISTED PAIR.
2. WIRE MATERIAL PER S-1460.
3. THE KX-160E PANEL UNIT INCLUDES A 14 PIN CONNECTOR FOR DME CHANNELING THAT IS NOT SHOWN ON THIS DIAGRAM.

| | | | |
|---|---|---|---|
| 9 | 030-0028-00 | CONNECTOR (KG) | |
| 8 | 030-0005-00 | CONNECTOR (KG) | |
| 7 | KI-201 | INDICATOR (KG) | |
| 6 | 030-2044-00 | CONNECTOR (KG) | |
| 5 | 030-2000-00 | CONNECTOR (KG) | |
| 4 | 030-2002-00 | CONNECTOR (KG) | |
| 3 | S-1360-15 | CIRCUIT BREAKER | |

| WIRE CODE NO. | GA | MATERIAL | LG | TERMINALS | | SEALS |
|---|---|---|---|---|---|---|
| GRY/RED | 22 | -22-8-2 | | SOLDER | S-1557-1 | |
| GRY/GRN | 22 | -22-8-5 | | | S-1557-1 | |
| BLU/BLK | 22 | -22-6-0 | | | SOLDER | |
| TAN/WHT | 22 | -22-10-9 | | | | |
| BLU/WHT | 22 | -22-6-9 | | | | |
| TAN/YEL | 22 | -22-10-4 | | | | |
| WHT/RED | 22 | -22-9-2 | | | SOLDER | |
| BLACK | 22 | -22-0 | | | S-1367-1-8 | |
| RED | 16 | -16-2 | | | S-1370-2 | |
| TAN | 22 | -22-10 | | | | |
| WHT/BLK | 22 | -22-9-0 | | | | |
| YELLOW | 18 | -18-4 | | | | |
| BLACK | 22 | -22-0 | | | S-1367-1-8 | |
| GREEN | 20 | -20-5 | | | S-341-2 | |
| BLUE | 22 | -22-6 | | | | |
| GRY/BLK | 22 | -22-8-0 | | | SOLDER | |
| GRY/BLU | 22 | -22-8-6 | | | | |
| GRY/YEL | 22 | -22-8-4 | | | | |
| BLU/RED | 22 | -22-6-2 | | | | |
| TAN/RED | 22 | -22-10-2 | | | | |
| BLACK | 16 | -16-0 | | | | |
| RED | 16 | -16-2 | | SOLDER | SOLDER | |

2 WIRE TABLE

CESSNA AIRCRAFT CO. COMMERCIAL AIRCRAFT DIVISION WICHITA, KANSAS

| | NAME | DATE |
|---|---|---|
| DRAWN | RIDDER | 6-21-65 |
| GROUP | H. Wine | 7-1-65 |

TITLE: WIRING DIAGRAM— KING KX-160E

Cessna.

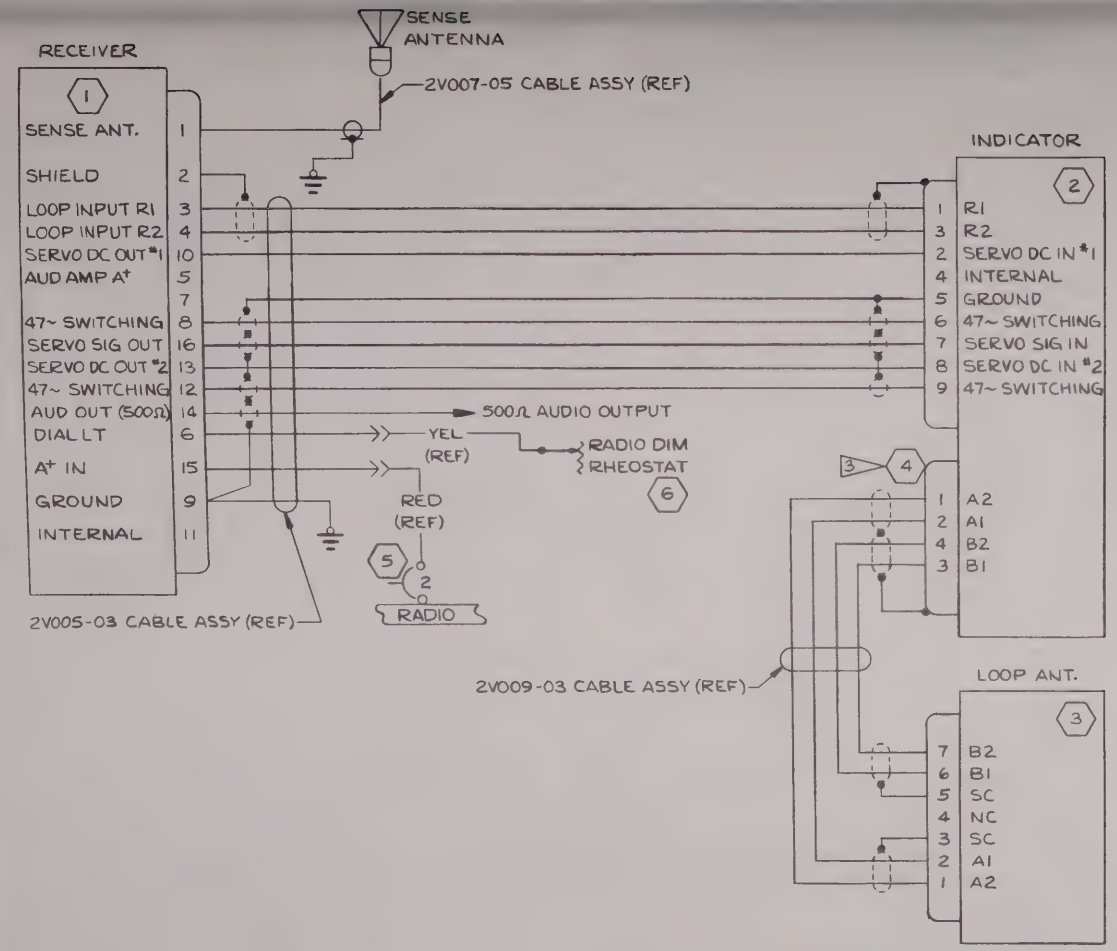


NOTES:

1. CONNECTIONS SHOWN ARE FOR TOP MOUNTED SENSE & BOTTOM MOUNTED LOOP ANTENNA.
2. ALL WIRES ARE VENDOR FURNISHED WITH INSTL KIT

3. (4) IS SUPPLIED LOOSE BY VENDOR & IS TO BE ATTACHED TO LOOP ANT. CABLE AS SHOWN. FLAGS ON WIRES INDICATE PIN NOS. ON LOOP ANT. END OF CABLE.

| ITEM NO | PART NO. | DESCRIPTION | INSTALLED ON |
|---|---|---|---|
| 6 | R-12½-75-RS34 | RHEOSTAT (TRTA) | |
| 5 | S-1360-2 | CIRCUIT BREAKER | |
| 3 4 | WK-4-21C-5/16 | PLUG (CED) | |
| 3 | 2321E | LOOP ANT. (BX) | |
| 2 | 551A | INDICATOR (BX) | |
| 1 | 201D | RCVR (BX) | |

EQUIPMENT TABLE

| WIRE CODE NO. | GA | MATERIAL | LG | TERMINALS | | SERIALS |
|---|---|---|---|---|---|---|
| | | | | | | |

WIRE TABLE

CESSNA AIRCRAFT CO., COMMERCIAL AIRCRAFT DIVISION, WICHITA, KANSAS

| | NAME | DATE |
|---|---|---|
| DRAWN | HOLFORD | 7-20-65 |
| GROUP | V. Wise | 8-23-65 |
| CHECK | R. Stuck | 8-24-65 |
| PROJ | W. McCants | 8-24-65 |

TITLE: WIRING DIAGRAM— BENDIX ADF-T-12C

Cessna

DWG NO: 1270475

| SUPERSEDED BY: | SUPERSEDES: | MODEL: 210, T210 | REV: | PAGE: 2.34 |
|---|---|---|---|---|

FORM NO 80-161A

(SR4938)

| CHG LET | REVISION | BY / DATE | CHK / APPD |
|---|---|---|---|
| | | | |

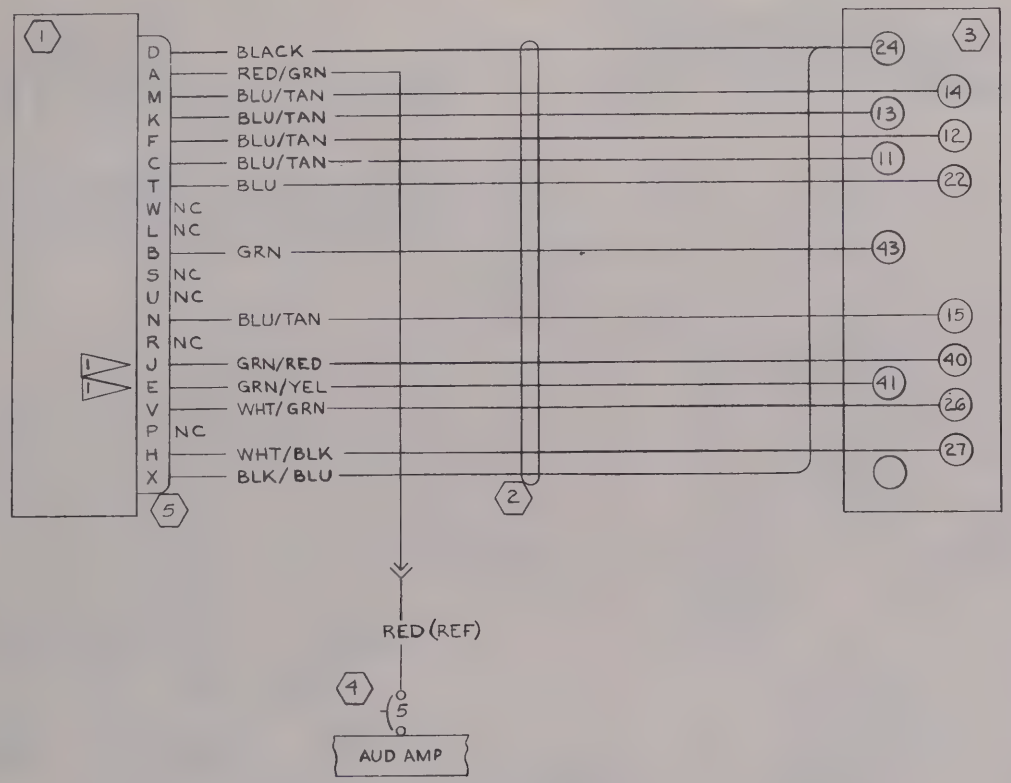


1. THESE CIRCUITS PROVIDE A 4 Ω, 5 WATT SPEAKER LOAD WHEN REQD BY THE RADIO INSTALLATION.
2. CONNECTOR IS FURNISHED WITH KA-25C.
3. TERMINAL BLOCK NUMBERS TO BE STAMPED ON WIRES PER CES 1015.

| | | | | |
|---|---|---|---|---|
| 2 | 5 | 030-2002-00 | PLUG (KG) | |
| | 4 | S-1360-5 | CIRCUIT BREAKER | |
| | 3 | 0770714-2 | TERMINAL BOARD | |

| WIRE CODE NO. | GA | MATERIAL | LG | TERMINALS | | | SERIALS |
|---|---|---|---|---|---|---|---|
| BLU/TAN | 22 | S-1460-22-6-10 | | S-1367-1-8 | SOLDER | | |
| WHT/GRN | 22 | S-1460-22-9-5 | | S-1367-1-8 | SOLDER | | |
| BLACK | 18 | -18-0 | | S-1367-1-8 | | | |
| RED/GRN | 20 | -20-2-5 | | S-341-2 | | | |
| BLU/TAN | 22 | -22-6-10 | | S-1367-1-8 | | | |
| BLU/TAN | 22 | -22-6-10 | | | | | |
| BLU/TAN | 22 | -22-6-10 | | | | | |
| BLU/TAN | 22 | -22-6-10 | | | | | |
| BLU | 22 | -22-6 | | | | | |
| GRN | 20 | -20-5 | | | | | |
| GRN/RED | 20 | -20-5-2 | | | | | |
| GRN/YEL | 20 | -20-5-4 | | | | | |
| WHT/BLK | 22 | -22-9-0 | | | | | |
| BLK/BLU | 22 | S-1460-22-0-6 | | S-1367-1-8 | SOLDER | | |

WIRE TABLE

CESSNA AIRCRAFT CO. COMMERCIAL AIRCRAFT DIVISION, WICHITA, KANSAS

| | NAME | DATE |
|---|---|---|
| DRAWN | G WOOD | 11-23-65 |
| GROUP | H. Wise | 11-24-65 |

TITLE: WIRING DIAGRAM— KING KA-25C AUDIO

Cessna

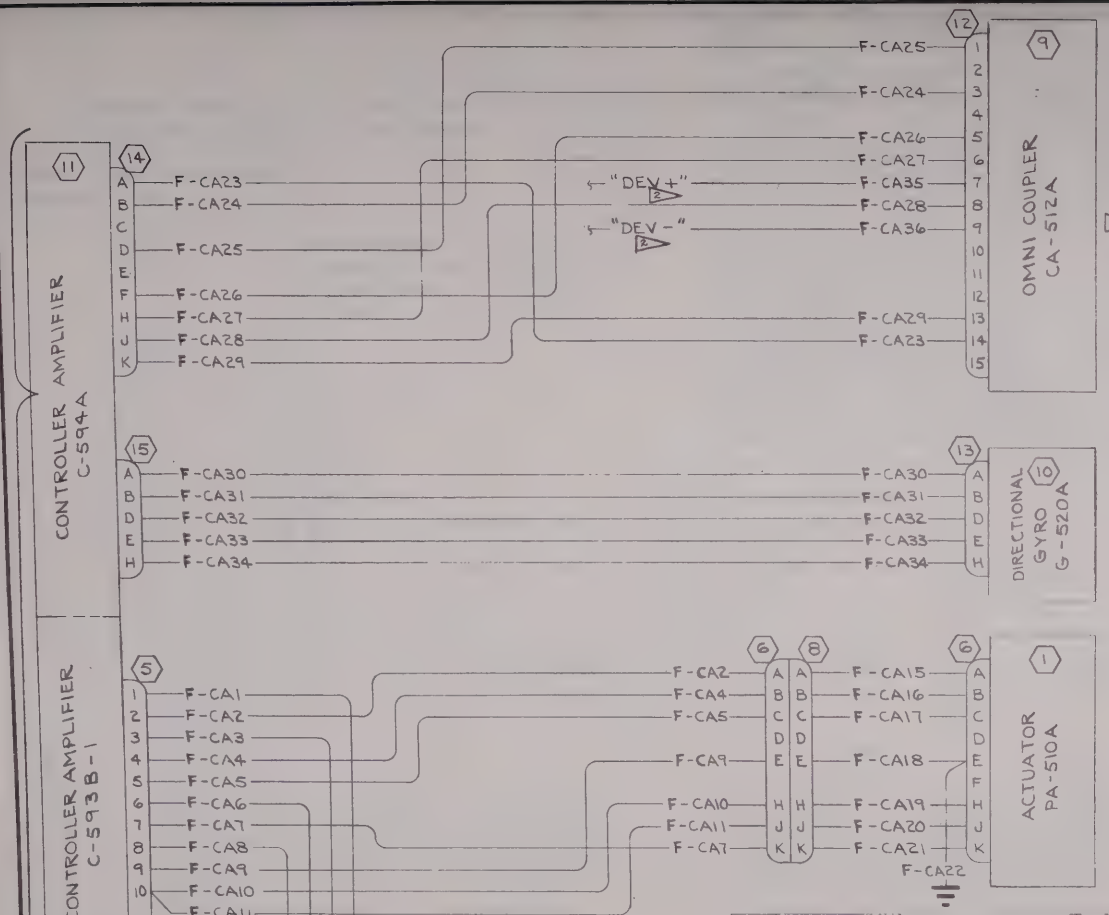


| CHG LET | REVISION | BY DATE | CHK APPD |
|---|---|---|---|
| A | IN E/T: G-515A RATE GYRO WAS G-520A; G-520A DIRECTIONAL GYRO WAS G-516A & REMOVE JUMPERS FROM 29410 PLUG | WJR 8-29-62 | RRS |

INACTIVE:
SERIAL 2105822 & ON
W&W 5-6-63 RRS

NOTES:
1. CABLE ASSYS MADE PER THIS DRAWING ARE USED ON MODELS OTHER THAN 210. CHANGES MADE TO THIS DRAWING SHOULD ALSO BE MADE TO WIRING DIAGRAMS ON THE OTHER MODELS USING THESE CABLE ASSYS.
2. "DEV+" AND "DEV-" TO BE STAMPED ON THESE WIRES AS SHOWN. NUMERICAL CODE IS OPTIONAL.

| WIRE CODE NO. | GA | MATERIAL | LG | TERMINALS | | N/A | SERIALS |
|---|---|---|---|---|---|---|---|
| F-CA36 | 22 | | | SOLDER | SOLDER | 1270449 | |
| F-CA35 | 22 | | | | | | |
| F-CA34 | 22 | | | | | | |
| F-CA33 | 22 | | | | | | |
| F-CA32 | 22 | | | | | | |
| F-CA31 | 22 | | | | | | |
| F-CA30 | 22 | | | | | | |
| F-CA29 | 20 | | | | | | |
| F-CA28 | 22 | | | | | | |
| F-CA27 | 22 | | | | | | |
| F-CA26 | 22 | | | | | | |
| F-CA25 | 22 | | | | | | |
| F-CA24 | 20 | | | | | | |
| F-CA23 | 20 | | | | | | |
| F-CA22 | 22 | | | | | | |
| F-CA21 | 22 | | | | | | |
| F-CA20 | 20 | | | | | | |
| F-CA19 | 20 | | | | | | |
| F-CA18 | 22 | | | | | | |
| F-CA17 | 22 | | | | | | |
| F-CA16 | 22 | | | | | | |
| F-CA15 | 22 | | | SOLDER | | | |
| F-CA14 | 18 | | | S-1361-1-8 | | | |
| F-CA13 | 18 | | | S-1361-1-8 | | | |
| F-CA12 | 16 | | | SOLDER | | | |
| F-CA11 | 20 | | | | | | |
| F-CA10 | 20 | | | | | | |
| F-CA9 | 22 | | | | | | |
| F-CA8 | 22 | | | | | | |
| F-CA7 | 22 | | | | | | |
| F-CA6 | 22 | | | | | | |
| F-CA5 | 22 | | | | | | |
| F-CA4 | 22 | | | | | | |
| F-CA3 | 22 | | | | | | |
| F-CA2 | 22 | | | | | | |
| F-CA1 | 22 | | | SOLDER | SOLDER | 1270449 | |

WIRE TABLE

| ITEM NO | PART NO. | DESCRIPTION | INSTALLED ON |
|---|---|---|---|
| 21 | | | |
| 20 | | | |
| 19 | | | |
| 18 | | | |
| 17 | 1270429-1 | BUS BAR | |
| 16 | S-1232-10 | CIRCUIT BREAKER | |
| 15 | 28371-0005 | PLUG (ARC) | |
| 14 | 28371-0009 | PLUG (ARC) | |
| 13 | 28326-0005 | PLUG (ARC) | |
| 12 | 29410 | PLUG (ARC) | |
| 11 | C-594A | CONTROLLER AMP (ARC) | |
| 10 | G-520A | DIRECTIONAL GYRO (ARC) | |
| 9 | CA-512A | OMNI COUPLER (ARC) | |
| 8 | 28505-0009 | PLUG (ARC) | |
| 7 | 50328-0002 | PLUG (ARC) | |
| 6 | 28326-0009 | PLUG (ARC) | |
| 5 | 28336 | PLUG (ARC) | |
| 4 | 28460 | PLUG (ARC) | |
| 3 | C-593B-1 | CONTROLLER AMP (ARC) | |
| 2 | G-515A | RATE GYRO (ARC) | |
| 1 | PA-510A | ACTUATOR (ARC) | |

EQUIPMENT TABLE

CESSNA AIRCRAFT CO., COMMERCIAL AIRCRAFT DIVISION, WICHITA, KANSAS

| | NAME | DATE |
|---|---|---|
| DRAWN | RIDDER | 8-6-62 |
| GROUP | C.V. Martin | 8-10-62 |
| CHECK | R. Steele | 8-10-62 |
| PROJ | N. McCarty | 8-10-62 |

TITLE: WIRING DIAGRAM — NAV-O-MATIC 200 & 300 SYSTEMS (OPT)

Cessna.

DWG NO. 1270405

| SUPERSEDED BY | SUPERSEDES | MODEL | REV | PAGE |
|---|---|---|---|---|
| 1270405, PAGE 17.7.1 | | 210 | A | 17.7 |

FORM NO. 80-161

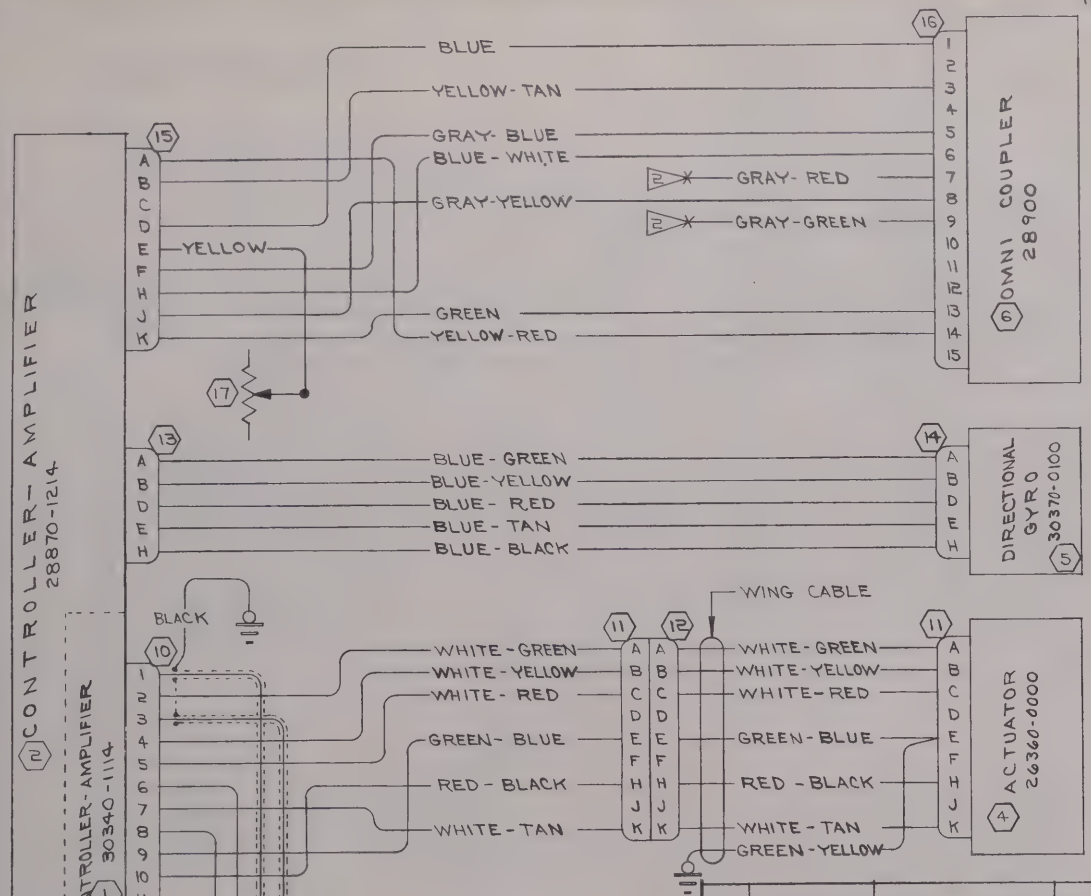


NOTES: (SR4240)

1. WHERE WIRE CODE LISTS 2 COLORS, 1ST COLOR IS BASE COLOR & 2ND COLOR IS THE STRIPE.
2. GRAY-RED WIRE IS "DEV+" CIRCUIT & GRAY-GREEN WIRE IS "DEV-" CIRCUIT FOR CONNECTION TO A VOR INDICATOR.
3. NAV-O-MATIC 300 SYSTEM INCLUDES ALL ITEMS EXCEPT (1), 200 SYSTEM INCLUDES (1) (3) (4) (7) & ASSOCIATED PLUGS & WIRES
4. CABLE ASSYS MADE PER THIS DWG ARE USED ON OTHER MODELS. CHANGES MADE ON THIS DIAGRAM SHOULD ALSO BE MADE TO REFERENCE DIAGRAMS ON THESE MODELS.

| CHG LET | REVISION | BY DATE | CHK APPD |
|---|---|---|---|
| A | ADDED YELLOW WIRE & R-12½-8-RS34; 30340-1114 WAS C-5938-1; 28870-1214 WAS C-594A; 50320 WAS G-515A; 26360-0000 WAS PA-510A; 30370-0100 WAS G-520A; 28900 WAS GA-512A | WJR 11-2-68 | RBS [illegible] HLW |

| WIRE CODE NO. | GA | MATERIAL | LG | TERMINALS | | NEXT ASSEMBLY | SERIALS |
|---|---|---|---|---|---|---|---|
| YELLOW | 20 | S-1460-20-4 | | SOLDER | SOLDER | 1270449-5 | 21058538 & ON |
| BLACK | 16 | S-1460-16-0 | | SOLDER | S-1367-2-8 | 1270449-1 | |
| YELLOW/RED | 20 | S-1460-20-4-2 | | | SOLDER | 1270449-5 | |
| GREEN | 20 | S-1460-20-5 | | | SOLDER | | |
| GRAY/GREEN | 22 | S-1460-22-8-5 | | | S-1370-0 | | |
| GRAY/RED | 22 | S-1460-22-8-2 | | | S-1370-0 | | |
| GRAY/YELLOW | 22 | S-1460-22-8-4 | | | SOLDER | | |
| BLUE/WHITE | 22 | S-1460-22-6-9 | | | | | |
| GRAY/BLUE | 22 | S-1460-22-8-6 | | | | | |
| YELLOW/TAN | 20 | S-1460-20-4-10 | | | | | |
| BLUE | 22 | S-1460-22-6 | | | | 1270449-5 | |
| BLUE/BLACK | 22 | S-1460-22-6-0 | | | | 1270449-4 | |
| BLUE/TAN | 22 | S-1460-22-6-10 | | | | | |
| BLUE/RED | 22 | S-1460-22-6-2 | | | | | |
| BLUE/YELLOW | 22 | S-1460-22-6-4 | | | | | |
| BLUE/GREEN | 22 | S-1460-22-6-5 | | | | 1270449-4 | |
| WHITE/GREEN | 22 | S-1460-22-9-5 | | | | 1270449-2 | |
| WHITE/YELLOW | 22 | S-1460-22-9-4 | | | | | |
| WHITE/RED | 22 | S-1460-22-9-2 | | | | | |
| GREEN/BLUE | 20 | S-1460-20-5-6 | | | | | |
| RED/BLACK | 18 | S-1460-18-2-0 | | | | | |
| WHITE/TAN | 22 | S-1460-22-9-10 | | | SOLDER | | |
| GREEN/YELLOW | 20 | S-1460-20-5-4 | | | S-1367-1-8 | 1270449-2 | |
| BLACK/WHITE | 18 | S-1460-18-0-9 | | | S-1367-1-8 | 1270449-3 | |
| RED/WHITE | 18 | S-1460-18-2-9 | | | S-1367-1-8 | 1270449-3 | |
| RED | 16 | S-1460-16-2 | | | S-1367-2-8 | 1270449-1 | |
| RED/BLACK | 18 | S-1460-18-2-0 | | | SOLDER | | |
| GREEN/BLUE | 20 | S-1460-20-5-6 | | | | | |
| TAN/WHITE | 22 | S-1460-22-10-9 | | | | | |
| WHITE/TAN | 22 | S-1460-22-9-10 | | | | | |
| TAN/BLUE | 22 | S-1460-22-10-6 | | | | | |
| WHITE/RED | 22 | S-1460-22-9-2 | | | | | |
| WHITE/YELLOW | 22 | S-1460-22-9-4 | | | | | |
| BLUE/RED | 22.5 | S-1461-22-6-2 | | | | | |
| WHITE/GREEN | 22 | S-1460-22-9-5 | | | | | |
| BLUE/YELLOW | 22.5 | S-1461-22-6-4 | | SOLDER | SOLDER | 1270449-1 | |

WIRE TABLE

| ITEM NO | PART NO. | DESCRIPTION | INSTALLED ON |
|---|---|---|---|
| 17 | R-12½-8-RS34 | RHEOSTAT (TRTA) | |
| 16 | 29910 | PLUG (ARC) | |
| 15 | 28371-0009 | PLUG (ARC) | |
| 14 | 28326-0005 | PLUG (ARC) | |
| 13 | 28371-0005 | PLUG (ARC) | |
| 12 | 28505-0009 | PLUG (ARC) | |
| 11 | 28326-0009 | PLUG (ARC) | |
| 10 | 28336 | PLUG (ARC) | |
| 9 | 50328-0002 | PLUG (ARC) | |
| 8 | 28460 | PLUG (ARC) | |
| 7 | S-1360-10 | CIRCUIT BREAKER | |
| 6 | 28900 | OMNI COUPLER (ARC TYPE CA-512A) | |
| 5 | 30370-0100 | DIRECTION GYRO (ARC TYPE G-520A) | |
| 4 | 26360-0000 | ACTUATOR (ARC TYPE PA-510A) | |
| 3 | 50320 | RATE GYRO (ARC TYPE G-515A) | |
| 2 | 28870-1214 | CONTROLLER-AMP (ARC TYPE C-594A-12) | |
| 1 | 30340-1114 | CONTROLLER-AMP (ARC TYPE C-593B-11) | |

EQUIPMENT TABLE

CESSNA AIRCRAFT CO., COMMERCIAL AIRCRAFT DIVISION, WICHITA, KANSAS

| | NAME | DATE |
|---|---|---|
| DRAWN | H. WISE | 5-3-63 |
| GROUP | [illegible] | 5-16-63 |
| CHECK | R. Stuck | 5-16-63 |
| PROJ | H. McCarter | 5-23-63 |

TITLE: WIRING DIAGRAM — NAV-O-MATIC 200 & 300 SYSTEMS (OPT)

Cessna.

DWG NO. 1270405

REV A

PAGE: 17.7.1

SUPERSEDED BY

SUPERSEDES 1270405, PAGE 17.7

MODEL: 210

FORM NO. 80-161

(SR4338)

| CHG LET | REVISION | BY DATE | CHK APPD |
|---|---|---|---|
| | | | |

NOTES:

1. GRY/RED WIRE IS "DEV +" CIRCUIT & GRY/GRN WIRE IS "DEV -" CIRCUIT FOR CONNECTION TO A VOR INDICATOR.
2. CONNECTORS REQUIRED FOR FABRICATING A COMPLETE SET OF INTERCONNECTING CABLES ARE INCLUDED IN ARC CONNECTOR KIT NO. 31682.
3. WING CABLE ASSY AND DIRECTIONAL GYRO CABLE ARE FOR REFERENCE ONLY THESE CABLES ARE IDENTICAL IN LENGTH AND COLOR CODING TO CABLES USED ON NAV-O-MATIC 300 INSTL.

| ITEM NO | PART NO. | DESCRIPTION | INSTALLED ON |
|---|---|---|---|
| 21 | 1270449-4 | CABLE ASSY | |
| 20 | 1270449-6 | CABLE ASSY | |
| 19 | 1270461-1 | BUS BAR | |
| 18 | RED | WIRE | |
| 17 | S-1360-10 | CIRCUIT BREAKER | |
| 16 | R-12½-75-RS34 | RHEOSTAT (TRTA) | |
| 15 | YELLOW | WIRE | |
| 14 | 28371-0009 | CONNECTOR (ARC | <2 |
| 13 | 28505-0009 | CONNECTOR (ARC) | |
| 12 | 28326-0009 | CONNECTOR (ARC) | |
| 11 | 28326-0007 | CONNECTOR (ARC) | |
| 10 | 28326-0005 | CONNECTOR (ARC) | |
| 9 | 28371-0005 | CONNECTOR (ARC) | |
| 8 | 28371-0007 | CONNECTOR (ARC) | |
| 7 | 31683-0020 | CONNECTOR ASSY | (ARC) <2 |
| 6 | 30370-0100 | DIRECTIONAL GYRO | (ARC G-520A) |
| 5 | 26360-0000 | ROLL ACTUATOR | (ARC PA-510A) |
| 4 | 26360-0000 | PITCH ACTUATOR | (ARC PA-510A) |
| 3 | 30475-0000 | VERTICAL GYRO | (ARC G-519A) |
| 2 | 30520-0014 | COMPUTER (ARC) | (CA-520A) |
| 1 | 30510-1014 | CONTROL UNIT (ARC) | (C-520A) |

EQUIPMENT TABLE

| WIRE CODE NO | GA | MATERIAL | LG | TERMINALS | | N/A | SERIALS |
|---|---|---|---|---|---|---|---|
| GRN/YEL | 20 | S-1460-20-5-4 | | SOLDER | S-1367-1-B | 0770704 | |
| WHT/BLK | 22 | S-1960-22-9-0 | | | SOLDER | | |
| RED/BLK | 18 | S-1460-18-2-0 | | | | | |
| WHT/RED | 22 | S-1960-22-9-2 | | | | | |
| BLK/BLU | 22 | S-1460-22-0-6 | | | | | |
| WHT/YEL | 22 | S-1460-22-9-4 | | | | | |
| WHT/GRN | 22 | S-1460-22-9-5 | | | | | |
| WHT/BLU | 22 | S-1460-22-9-6 | | | | | |
| WHT/TAN | 22 | S-1460-22-9-10 | | | | | |
| RED/BLK | 18 | S-1960-18-2-0 | | | | | |
| WHT/RED | 22 | S-1960-22-9-2 | | | | | |
| WHT/BLU | 22 | S-1460-22-9-6 | | | | | |
| WHT/TAN | 22 | S-1460-22-9-10 | | | | | |
| WHT/YEL | 22 | S-1960-22-9-4 | | | | | |
| WHT/GRN | 22 | S-1460-22-9-5 | | SOLDER | SOLDER | 0770704 | |
| TAN/WHT | 22 | S-1460-22-10-9 | | SOLDER | SOLDER | 0770704 | |
| TAN/BLU | 22 | S-1960-22-10-6 | | | | | |
| TAN/YEL | 22 | S-1460-22-10-4 | | | | | |
| TAN/RED | 22 | S-1460-22-10-2 | | | SOLDER | | |
| YELLOW | 18 | S-1960-18-4 | | | S-1370-1 | | |
| RED | 16 | S-1460-16-2 | | | S-1370-2 | | |
| WHT/RED | 22 | S-1460-22-9-2 | | | SOLDER | | |
| BLU/TAN | 22 | S-1460-22-6-10 | | | | | |
| RED/WHT | 18 | S-1460-18-2-9 | | | | | |
| WHT/BLK | 22 | S-1460-22-9-0 | | | SOLDER | | |
| GRY/GRN | 22 | S-1460-22-8-5 | | | S-1370-1 | | |
| GRY/RED | 22 | S-1460-22-8-2 | | | S-1370-1 | | |
| BLU/WHT | 22 | S-1460-22-6-9 | | | SOLDER | | |
| RED/BLK | 18 | S-1460-18-2-0 | | | | | |
| TAN/WHT | 22 | S-1460-22-10-9 | | | | | |
| BLU/GRN | 22 | S-1460-22-6-5 | | | | | |
| TAN/BLU | 22 | S-1460-22-10-6 | | | | | |
| TAN/RED | 22 | S-1460-22-10-2 | | | | | |
| BLU/YEL | 22 | S-1460-22-6-4 | | | | | |
| TAN/YEL | 22 | S-1460-22-10-4 | | | | | |
| BLU/RED | 22 | S-1460-22-6-2 | | | | | |
| BLU/BLK | 22 | S-1460-22-6-0 | | | | | |
| TAN | 22 | S-1460-22-10 | | | | | |
| BLUE | 22 | S-1460-22-6 | | SOLDER | SOLDER | 0770704 | |

WIRE TABLE

CESSNA AIRCRAFT CO., COMMERCIAL AIRCRAFT DIVISION, WICHITA, KANSAS

| | NAME | DATE |
|---|---|---|
| DRAWN | RIDDER | 9-5-63 |
| GROUP | [illegible] | 9-22-63 |
| CHECK | R. Huck | 9-18-63 |
| PROJ | N. Norlate | 11-14-63 |

TITLE: WIRING DIAGRAM — NAV-O-MATIC 400 SYSTEM (OPT)

Cessna.

DWG NO 1270405

| SUPERSEDED BY | SUPERSEDES | MODEL | REV. | PAGE |
|---|---|---|---|---|
| | | 210 | | 17.23 |

FORM NO. 80-161

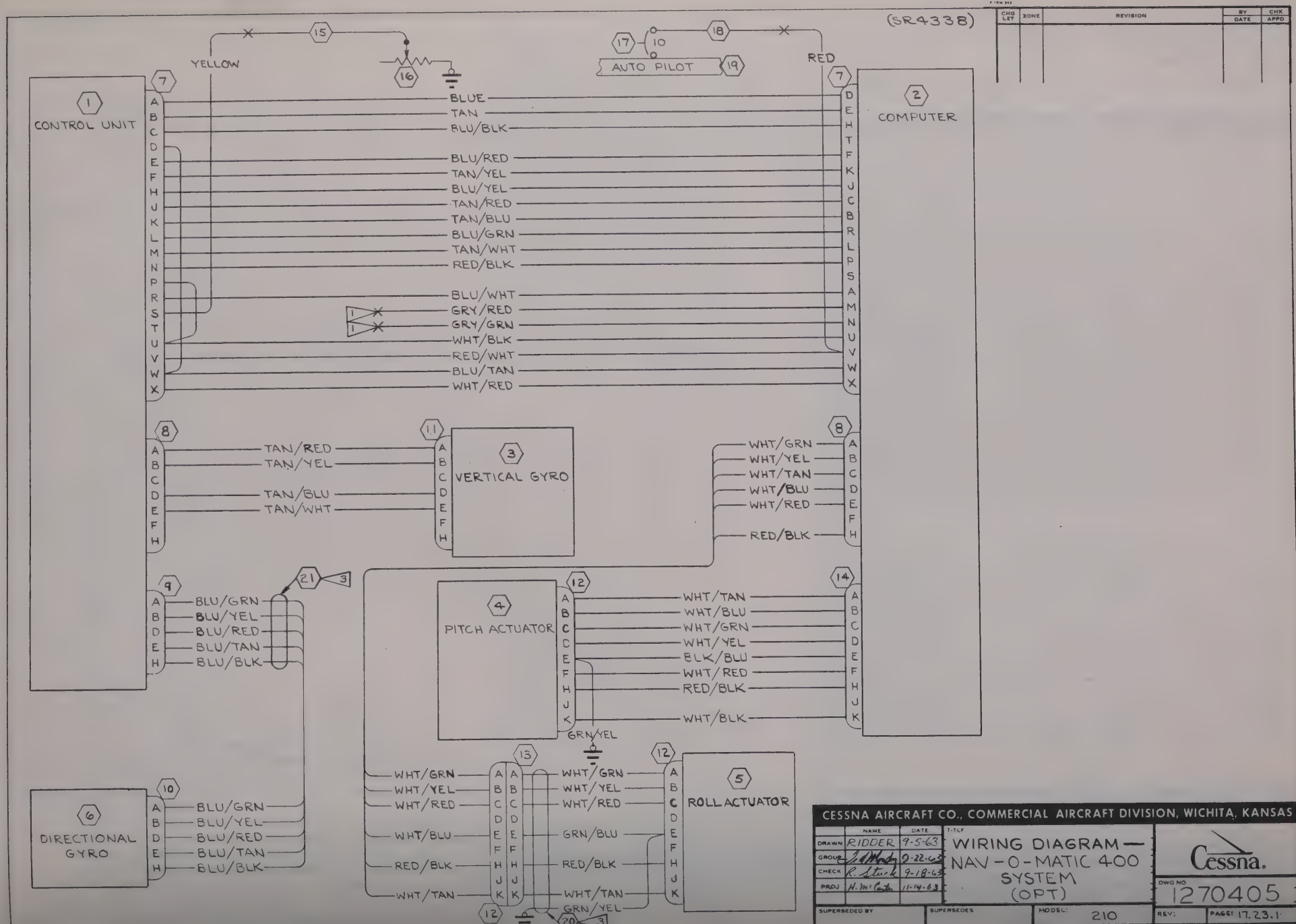
(SR4338)
CHG LET
ZONE
REVISION
BY
DATE
CHK
APPD
YELLOW
RED
AUTO PILOT
CONTROL UNIT
COMPUTER
VERTICAL GYRO
PITCH ACTUATOR
ROLL ACTUATOR
DIRECTIONAL GYRO
BLUE
TAN
BLU/BLK
BLU/RED
TAN/YEL
BLU/YEL
TAN/RED
TAN/BLU
BLU/GRN
TAN/WHT
RED/BLK
BLU/WHT
GRY/RED
GRY/GRN
WHT/BLK
RED/WHT
BLU/TAN
WHT/RED
TAN/RED
TAN/YEL
TAN/BLU
TAN/WHT
WHT/GRN
WHT/YEL
WHT/TAN
WHT/BLU
WHT/RED
RED/BLK
BLU/GRN
BLU/YEL
BLU/RED
BLU/TAN
BLU/BLK
WHT/TAN
WHT/BLU
WHT/GRN
WHT/YEL
BLK/BLU
WHT/RED
RED/BLK
WHT/BLK
GRN/YEL
WHT/GRN
WHT/YEL
WHT/RED
WHT/BLU
RED/BLK
WHT/TAN
WHT/GRN
WHT/YEL
WHT/RED
GRN/BLU
RED/BLK
WHT/TAN
GRN/YEL
CESSNA AIRCRAFT CO., COMMERCIAL AIRCRAFT DIVISION, WICHITA, KANSAS
NAME
DATE
DRAWN RIDDER 9-5-63
GROUP 9-22-63
CHECK R. Stuck 9-18-63
PROJ 11-14-63
TITLE
WIRING DIAGRAM — NAV-O-MATIC 400 SYSTEM (OPT)
Cessna.
DWG NO 1270405
SUPERSEDED BY
SUPERSEDES
MODEL: 210
REV:
PAGE: 17.23.1

# TABLE OF CONTENTS

## THRU 1964 SERIALS
## 336-0001 THRU 336-0195


| PAGE NO. | TITLE | DATE ISSUED | REV |
|---|---|---|---|
| 7.1 | Speaker, Phone Jack, and Microphone Jack | 4-30-62 | |
| 7.2.1 | Narco Mark 10 with VOA-4 or VOA-5 | 9-17-63 | |
| 7.2.2 | Narco Mark 10 with VOA-4 or VOA-5 | 9-17-63 | |
| 7.4.1 | Narco UGR-1A Glide Slope RCVR | 12-3-63 | Inac. |
| 7.4.2 | Narco UGR-1A Glide Slope RCVR (Opt.) | 12-3-63 | |
| 7.5 | Narco DME | 10-7-63 | B |
| 7.6 | King KR-20 Mrk Bcn Receiver | 4-3-64 | Inac. |
| 7.8 | Narco Mark VII | 11-27-63 | A |
| 7.9.1 | Narco Audio System | 11-27-63 | |
| 7.10 | Cessna Transceiver 500 (Type 302A) | 1-13-64 | Inac. |
| 7.10.1 | Cessna Transceiver 500 (Type 302A) | 1-13-64 | Inac. |
| 7.10.2 | Cessna Transceiver 500 (Type 302A) | 1-13-64 | |
| 7.10.3 | Cessna Transceiver 500 (Type 302A) | 1-13-64 | |
| 7.11 | Audio System - Cessna Series Radios 500 (Opt.) | 1-13-64 | Inac. |
| 7.11.1 | Audio System - Cessna 500 Series Radios (Opt.) | 1-13-64 | |
| 7.12 | Cessna Nav/Omni 500 (Type 319A) | 1-13-64 | Inac. |
| 7.12.1 | Cessna Nav/Omni 500 (Type 319A) | 1-13-64 | Inac. |
| 7.12.2 | Cessna Nav/Omni 500 (Type 319A) | 1-13-64 | |
| 7.12.3 | Cessna Nav/Omni 500 (Type 319A) | 1-13-64 | |
| 7.13 | Cessna ADF 500 Receiver (Type 318A) | 1-13-64 | Inac. |
| 7.13.1 | Second Cessna ADF 500 Receiver (Type 318A) | 1-13-64 | Inac. |
| 7.13.2 | Cessna ADF 500 (Type 318A) | 1-13-64 | |
| 7.14 | Cessna Nav/Com 500 (Type 317A) | 1-13-64 | Inac. |
| 7.14.1 | Cessna Nav/Com 500 (Type 317A) | 1-13-64 | Inac. |
| 7.14.2 | Cessna Nav/Com 500 (Type 317A) | 1-13-64 | |
| 7.14.3 | Cessna Nav/Com 500 (Type 317A) | 1-13-64 | |

# TABLE OF CONTENTS


| PAGE NO. | TITLE | DATE ISSUED | REV |
|---|---|---|---|
| 17.15 | King Audio System (Opt.) | 11-27-63 | |
| 17.16 | King Radio - Com / VOR-ILS | 6-28-62 | A |
| 17.16.1 | King KY-95, KX-120, KX-130 | 6-28-62 | |
| 17.17 | King KX-150 Com-Nav | 11-16-62 | |
| 17.18 | Sun Air T-10R & T-5-RA H. F. | 8-28-63 | A |
| 17.19 | Narco Mark 12 & VOA-4, VOA-5 or VOR-6 | 9-12-63 | |
| 17.19.1 | Narco Mark 12 & VOA-4, VOA-5 or VOA-6 | 9-12-63 | |
| 17.19.2 | Narco Mark 12 & VOA-4, VOA-5 or VOA-6 | 9-12-63 | |
| 17.21 | Cessna Nav/Com 300 (Type 513A) | 4-3-64 | Inac. |
| 17.22 | Cessna ADF 300 (Type 521A) | | |
| 17.23 | Audio System Cessna Nav/Com 300 & ADF 300 (Opt.) | 4-3-64 | Inac. |
| 17.25 | Cessna 300 Marker Beacon Receiver | 10-28-63 | |
| 17.26 | Cessna Audio System (Opt.) | 4-3-64 | Inac. |
| 17.27 | Cessna Nav/Com 300 (Type 514A) | 4-3-64 | |
| 17.27.1 | Cessna Nav/Com 300 (Type 514A) | 4-3-64 | |
| 17.28 | Audio System - Single Nav/Com 300 (Type 514A) | 4-3-64 | |
| 17.28.1 | Audio System - Dual Cessna Nav/Com 300 (Type 514A) | 4-3-64 | |
| 17.29 | Cessna Nav/Com 300R (Type 514R) | 8-13-64 | NC |

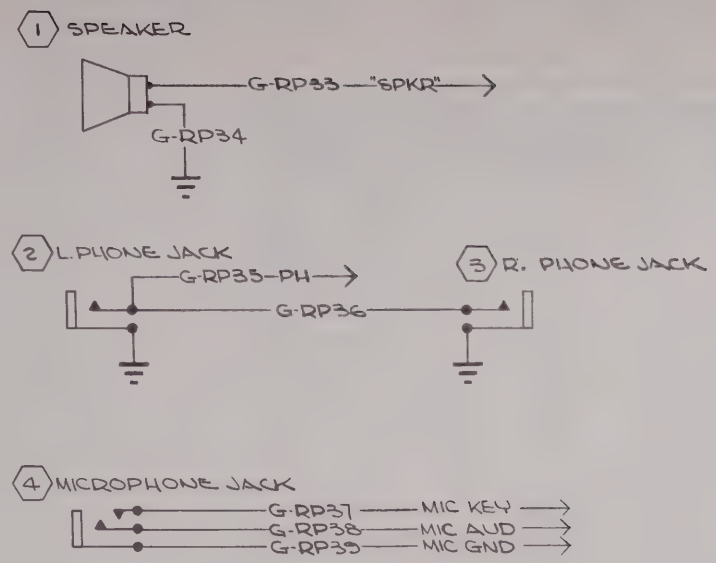


| WIRE CODE NO. | GA | MATERIAL | LG | TERMINALS | | | SERIALS |
|---|---|---|---|---|---|---|---|
| G-RP39 | 20 | | | SOLDER | S-341-2 | | |
| 38 | | | | SOLDER | S-341-2 | | |
| 37 | | | | SOLDER | S-341-2 | | |
| 36 | | | | SOLDER | SOLDER | | |
| 35 | | | | SOLDER | S-341-2 | | |
| 34 | | | | SOLDER | S-1367-1-8 | | |
| G-RP33 | 20 | | | SOLDER | S-341-2 | | |

WIRE TABLE

| ITEM NO | PART NO. | DESCRIPTION | INSTALLED ON |
|---|---|---|---|
| 4 | S-1102-1 | MICROPHONE JACK | 1470005 |
| 3 | S-1103-1 | RT. PHONE JACK | 1470025 |
| 2 | S-1103-1 | L. PHONE JACK | 1470025 |
| 1 | 0812522-1 | SPEAKER | 1470005 |

EQUIPMENT TABLE

CESSNA AIRCRAFT CO. COMMERCIAL AIRCRAFT DIVISION WICHITA, KANSAS

| | NAME | DATE |
|---|---|---|
| DRAWN | HARDEN | 4-30-62 |
| GROUP | Harden | 5-22-62 |
| CHECK | E.T. Clark | 5-23-62 |
| PROJ | [illegible] | 5-26-62 |

TITLE: WIRING DIAGRAM — SPEAKER, PHONE JACK & MICROPHONE JACK

Cessna.

DWG NO. 1470000

SUPERSEDED BY | SUPERSEDES | MODEL: 336 | REV: | PAGE: 17.1

FORM NO. 80-161

| CHG LET | REVISION | BY / DATE | CHK / APPD |
|---|---|---|---|
| | | | |

NOTES:

1. OHMITE "BROWN DEVIL OR EQUIV.
2. VENDOR FURNISHED
3. LIGHT DIMMER WIRE CONNECTS TO FLOOD LIGHT RHEOSTAT WITH STANDARD LIGHTING. WHEN OPTIONAL POST LIGHTING IS INSTALLED, CONNECT TO FLIGHT INSTRUMENT & RADIO DIAL LIGHT DIMMING RESISTOR

## WIRE TABLE

| WIRE CODE NO. OR PART NO. | GA | MATERIAL OR NOMENCLATURE | LG | TERMINALS | | -17-31 NO. REQ N/A | SERIALS |
|---|---|---|---|---|---|---|---|
| MS3057-12 | | CLAMP | | | | 1 | |
| 30-410WATT | | RESISTOR | | | | | |
| 5-2WATT | | RESISTOR | | | | 1 | |
| MS3106A-20-27S | | PLUG | | | | 1 | |
| 41238-2 | | PLUG | (NARCO) | | | 1 | |
| 30603-16 | | PWR CABLE | (NARCO) | | | 1 | |
| G-RD74 | | OMITTED | | | | | |
| 73 | | OMITTED | | | | | |
| 72 | | OMITTED | | | | | |
| 71 | 22 | | | SOLDER | SOLDER | 1 | |
| G-RD70 | 22 | | | SOLDER | SOLDER | 1 | |
| G-RD69 | 22 | | | SOLDER | SOLDER | 1 | |
| 68 | 22 | | | SOLDER | SOLDER | 1 | |
| 67 | | OMITTED | | | | | |
| 66 | | OMITTED | | | | | |
| 65 | 22 | | | SOLDER | S-341-2 | 1 | |
| 64 | 22S | | | SOLDER | S-341-2 | | |
| 63 | 22 | | | SOLDER | S-341-2 | | |
| 62 | | OMITTED | | | | | |
| 61 | | | | | | | |
| 60 | | | | | | | |
| 59 | | | | | | | |
| 58 | | | | | | | |
| 57 | | | | | | | |
| 56 | | | | | | | |
| 55 | | | | | | | |
| 54 | | OMITTED | | | | | |
| 53 | 22 | | | SOLDER | S-341-2 | | |
| 52 | 22 | | | | S-341-2 | | |
| 51 | 22S | | | | SOLDER | 1 | |
| 50 | 22 | | | SOLDER | S-1367-1-8 | 1 | |
| 49 | | OMITTED | | | | | |
| 48 | 22 | | | SOLDER | S-1370-1 | 1 | |
| 47 | 22 | | | S-1370-1 | S-1367-1-8 | 1 | |
| 46 | 22S | | | SOLDER | SOLDER | 1 | |
| 45 | 22 | | | SOLDER | SOLDER | 1 | |
| 44 | 22 | | | SOLDER | S-341-2 | 1 | |
| 43 | 22 | | | SOLDER | SOLDER | | |
| 42 | 18 | | | SOLDER | S-1367-1-8 | 1 | |
| G-RD41 | 18 | | | S-1370-1 | S-1367-1-6 | 1 | |

## EQUIPMENT TABLE

| ITEM NO | PART NO. | DESCRIPTION | INSTALLED ON |
|---|---|---|---|

CESSNA AIRCRAFT CO. COMMERCIAL AIRCRAFT DIVISION, WICHITA KANSAS

| | NAME | DATE |
|---|---|---|
| DRAWN | ACKERSON | 5-21-62 |
| GROUP | HARDEN | 5-22-62 |
| CHECK | ET CLARK | 5-23-62 |
| PROJ | D. AHRENS | 5-26-62 |

TITLE: WIRING DIAGRAM — NARCO MARK 10 WITH VOA-4 OR VOA-5 (OPTIONAL)

Cessna.

DWG NO. 1470000

SUPERSEDED BY | SUPERSEDES PG 17.2 | MODEL 336 | REV | PAGE 17.2.1

FORM NO. BO-161

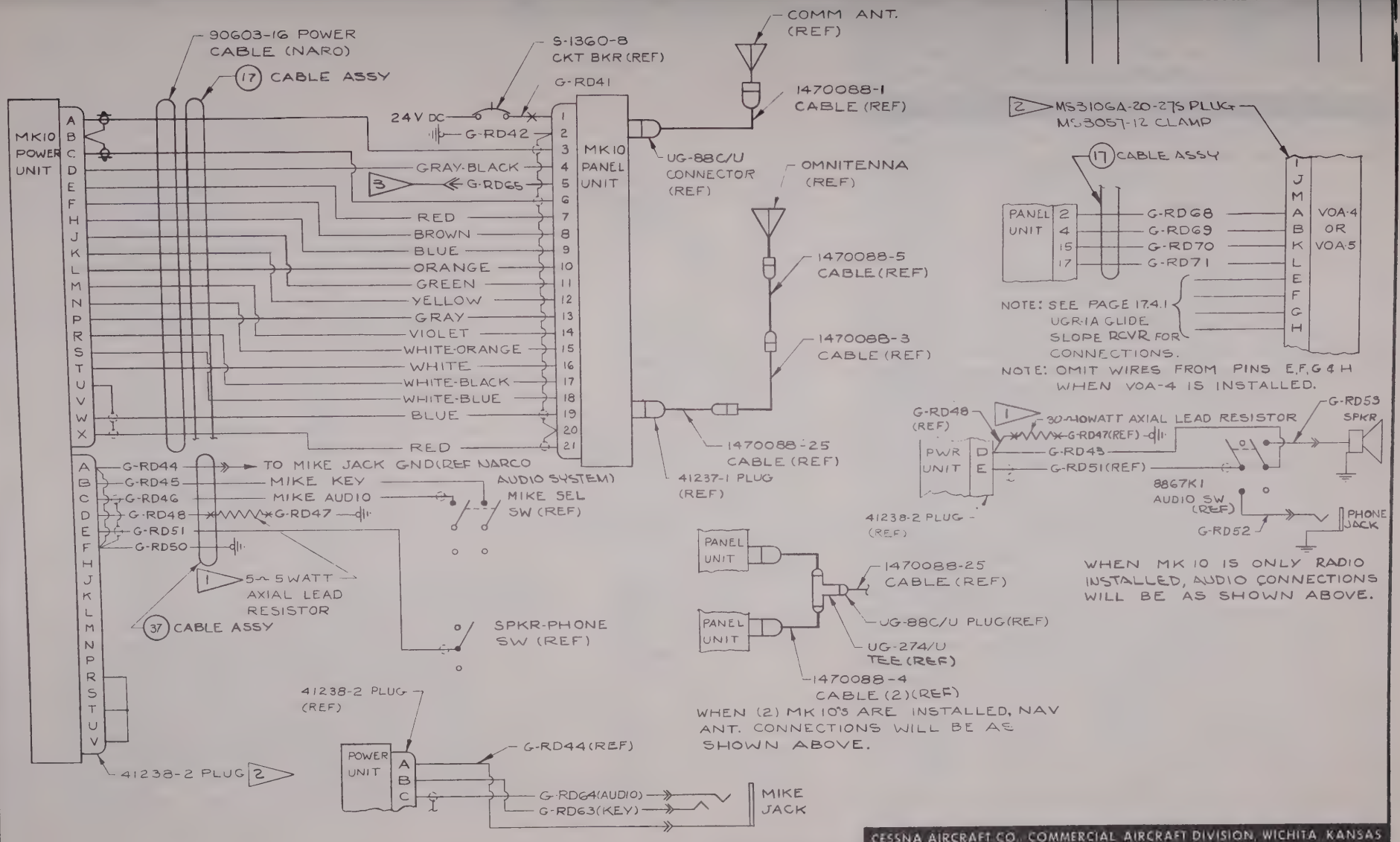


| CHG LET | ZONE | REVISION | BY DATE | CHK APPD |
|---|---|---|---|---|

CESSNA AIRCRAFT CO. COMMERCIAL AIRCRAFT DIVISION, WICHITA, KANSAS

| | NAME | DATE |
|---|---|---|
| DRAWN | ACKERSON | 5-21-62 |
| GROUP | HARDEN | 5-22-62 |
| CHECK | E.T. CLARK | 5-23-62 |
| STRESS | | |
| PROJ | D. AHREN | 5-26-62 |

TITLE: WIRING DIAGRAM — NARCO MARK 10 WITH VOA-4 OR VOA-5 (OPTIONAL)

Cessna.

DWG NO. 1470000

SUPERSEDES: DG 17.2

MODEL: 336

REV:

PAGE: 17.2.2

| CHG LET | REVISION | BY / DATE | CHK / APPD |
|---|---|---|---|
| A | ON S-1371-20 & S-1371-21 BLOCK ASSY: PIN "R" WAS PIN "G". DELETED NOTE 5 ADDED B/M & -19 CABLE ASSY INACTIVATED DWG. | WHH 10-17-63 | RRS WHH |

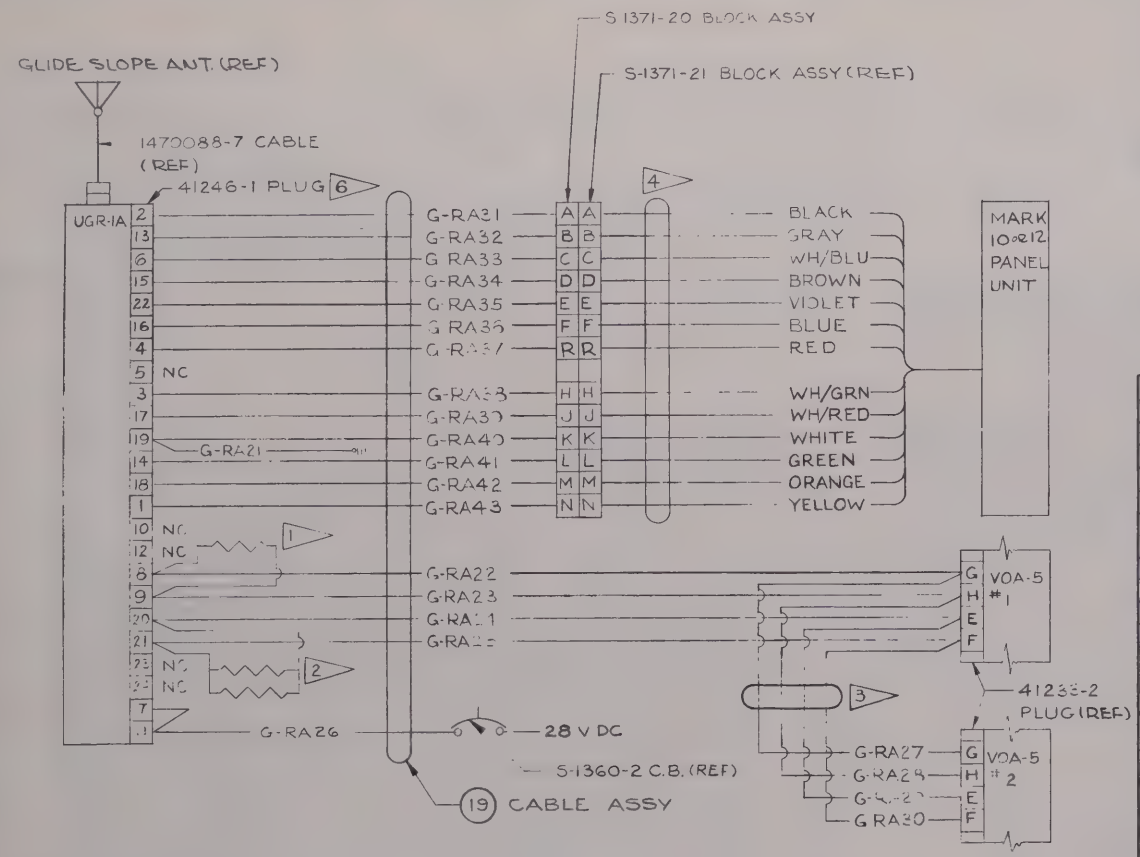


1 1000 Ω, ½ WATT OHMITE "LITTLE DEVIL" OR EQUIV. THIS RESISTOR NOT REQD IF TWO INDICATORS ARE INSTALLED.

2 1000 Ω, ½ WATT OHMITE "LITTLE DEVIL" OR EQUIV. 1 REQD WHEN TWO INDICATORS ARE INSTALLED. 2 REQD WHEN ONE INDICATOR IS INSTALLED.

3 THESE WIRES OMITTED IF SECOND INDICATOR IS NOT INSTALLED.

4 THESE WIRES PART OF PIGTAIL FROM MARK 10

5.

6 PLUGS VENDOR FURNISHED

INACTIVE WHH 11-20-63 RRS wet
336-0093 & ON

| WIRE CODE NO. OR PART NO. | GA | MATERIAL OR NOMENCLATURE | LG | TERMINALS | | -19 NO REQ N/A | SERIALS |
|---|---|---|---|---|---|---|---|
| 1000 OHM 1/2 WATT | | RESISTOR | | | | A/R | 1 2 |
| 41246-1 | | PLUG | | | | 1 | |
| S-1371-20 | | BLOCK ASSY | | | | 1 | |
| G-RA43 | 22 | | | SOLDER | S-1371-1 | 1 | |
| 42 | 22 | | | | | 1 | |
| 41 | 22 | | | | | 1 | |
| 40 | 22 | | | | | 1 | |
| 39 | 22 | | | | | 1 | |
| 38 | 22 | | | | | 1 | |
| 37 | 22 | | | | | 1 | |
| 36 | 22 | | | | | 1 | |
| 35 | 22 | | | | | 1 | |
| 34 | 22 | | | | | 1 | |
| 33 | 22 | | | | | 1 | |
| 32 | 22 | | | | | 1 | |
| 31 | 22 | | | | S-1371-1 | 1 | |
| 30 | 22 | | | | SOLDER | 1 | |
| 29 | 22 | | | | | 1 | |
| 28 | 22 | | | | | 1 | |
| 27 | 22 | | | | SOLDER | 1 | |
| 26 | 16 | | | | S-1367-2-6 | 1 | |
| 25 | 22 | | | | SOLDER | 1 | |
| 24 | 22 | | | | | 1 | |
| 23 | 22 | | | | | 1 | |
| 22 | 22 | | | | SOLDER | 1 | |
| G-RA21 | 16 | | | SOLDER | S-1367-2-8 | 1 | |

WIRE TABLE

CESSNA AIRCRAFT CO. COMMERCIAL AIRCRAFT DIVISION WICHITA KANSAS

| | NAME | DATE |
|---|---|---|
| DRAWN | Ackerson | 9-28-62 |
| GROUP | [illegible] | 10-14-62 |
| CHECK | R. Stuck | 10-19-62 |
| PROJ | [illegible] | [illegible] |

TITLE: WIRING DIAGRAM — NARCO UGR-1A GLIDE SLOPE RCVR (OPTIONAL)

Cessna.

DWG NO: 1470000

SUPERSEDED BY PG 17.4.2 | SUPERSEDES | MODEL 336 | REV A | PAGE: 17.4.1

| ITEM NO | PART NO. | DESCRIPTION | INSTALLED ON |
|---|---|---|---|

EQUIPMENT TABLE

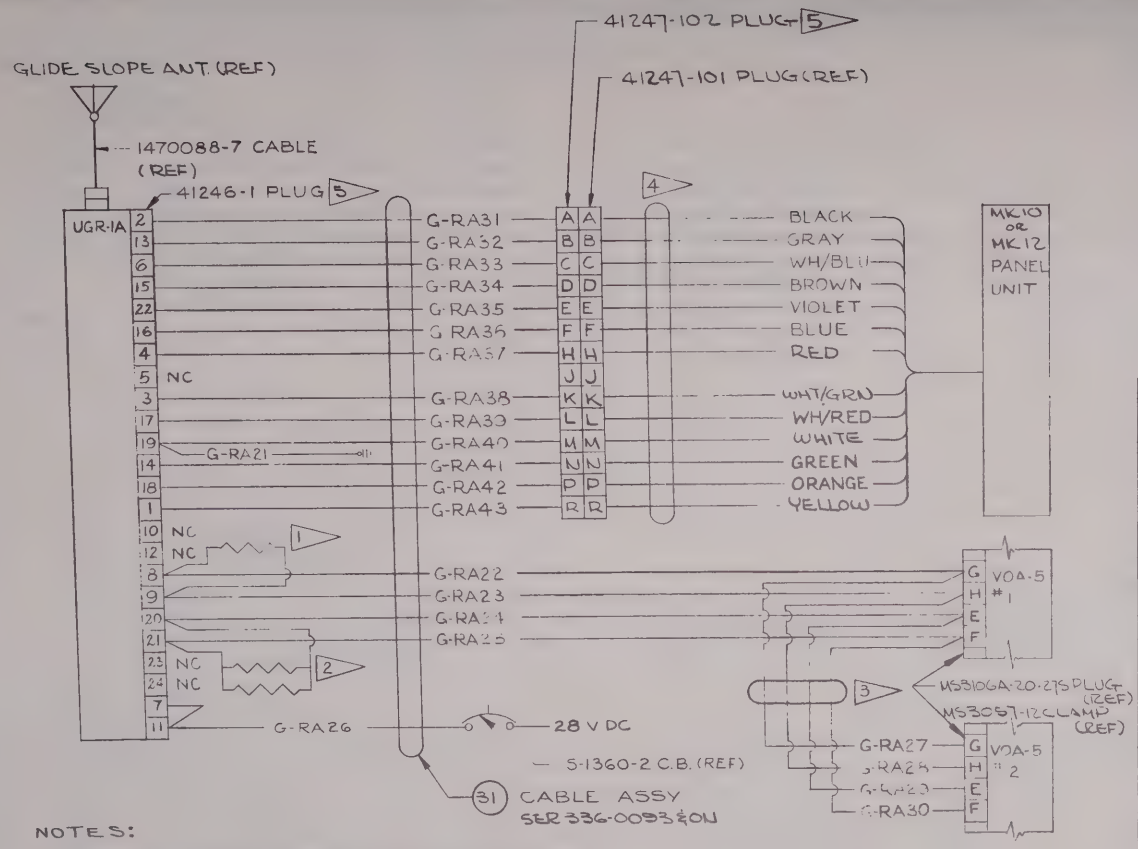


NOTES:

1. 1000 Ω, ½ WATT OHMITE "LITTLE DEVIL" OR EQUIV. THIS RESISTOR NOT REQD IF TWO INDICATORS ARE INSTALLED.
2. 1000 Ω, ½ WATT OHMITE "LITTLE DEVIL" OR EQUIV. 1 REQD WHEN TWO INDICATORS ARE INSTALLED. 2 REQD WHEN ONE INDICATOR IS INSTALLED.
3. THESE WIRES OMITTED IF SECOND INDICATOR IS NOT INSTALLED.
4. THESE WIRES ARE THE PIGTAIL FROM THE MK 10 OR MK 12
5. PLUGS ARE VENDOR SUPPLIED.

| CHG LET | REVISION | BY DATE | CHK APPD |
|---|---|---|---|
| | | | |

| WIRE CODE NO. OR PART NO. | GA | MATERIAL OR NOMENCLATURE | LG | TERMINALS | 31 NO REQ N/A | SERIALS |
|---|---|---|---|---|---|---|
| 1000 OHM ½ WATT | | RESISTOR | | | A/R | 1 2 |
| 41246-1 | | PLUG (NARO) | | | 1 | |
| 41247-102 | | PLUG (NARO) | | | 1 | |
| G-RA43 | 22 | | | SOLDER | SOLDER | 1 |
| 42 | 22 | | | | | 1 |
| 41 | 22 | | | | | 1 |
| 40 | 22 | | | | | 1 |
| 39 | 22 | | | | | 1 |
| 38 | 22 | | | | | 1 |
| 37 | 22 | | | | | 1 |
| 36 | 22 | | | | | 1 |
| 35 | 22 | | | | | 1 |
| 34 | 22 | | | | | 1 |
| 33 | 22 | | | | | 1 |
| 32 | 22 | | | | | 1 |
| 31 | 22 | | | | | 1 |
| 30 | 22 | | | | | 1 |
| 29 | 22 | | | | | 1 |
| 28 | 22 | | | | | 1 |
| 27 | 22 | | | | SOLDER | 1 |
| 26 | 16 | | | | S-1367-2-6 | 1 |
| 25 | 22 | | | | SOLDER | 1 |
| 24 | 22 | | | | | 1 |
| 23 | 22 | | | | | 1 |
| 22 | 22 | | | | SOLDER | 1 |
| G-RA21 | 16 | | | SOLDER | S-1367-2-8 | 1 |

WIRE TABLE

| ITEM NO | PART NO. | DESCRIPTION | INSTALLED ON |
|---|---|---|---|

EQUIPMENT TABLE

CESSNA AIRCRAFT CO. COMMERCIAL AIRCRAFT DIVISION WICHITA KANSAS

| | NAME | DATE |
|---|---|---|
| DRAWN | HARDEN | 11-22-63 |
| GROUP | [illegible] | 11-26-63 |
| CHECK | R. Fluck | 11-27-63 |
| PROJ | | |
| APP | | |

TITLE: WIRING DIAGRAM — NARCO UGR-1A GLIDE SLOPE RCVR (OPTIONAL)

Cessna.

DWG NO. 1470000

REV.

PAGE: 174.2

SUPERSEDED BY [illegible]

SUPERSEDES PG 174.1

MODEL: 336

FORM NO. 80-161

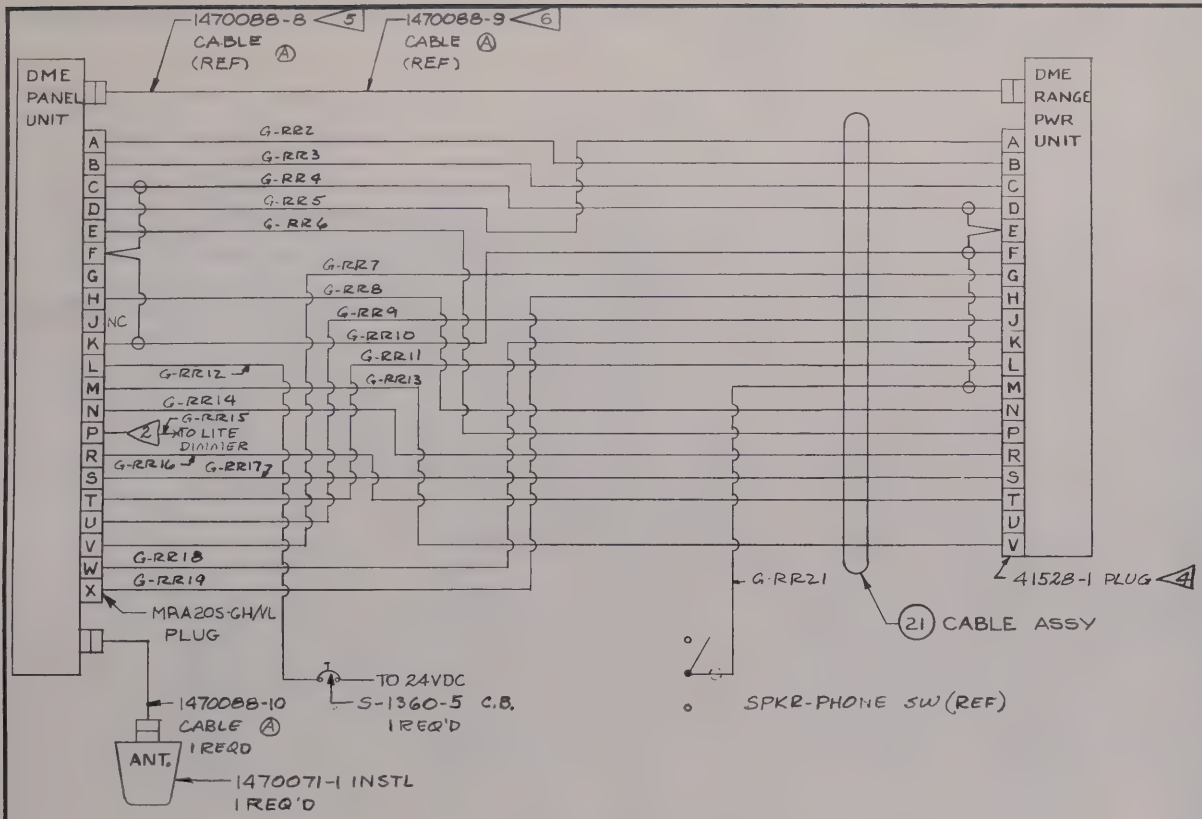


| CHG LET | REVISION | BY DATE | CHK APPD |
|---|---|---|---|
| A | CHANGED WIRE CALLOUT TO P/N FOR COAX LEADS. ADDED NOTES 5 & 6 | 5-21-62 | |
| B | DELETED NOTES 1 & 3. ADDED B/M 6-21 CABLE ASSY | D.Z. 5-17-63 | |

| | | | | | | | |
|---|---|---|---|---|---|---|---|
| MRA20S- | GH/VL | PLUG | | | | 1 | |
| 41528-1 | | PLUG | | | | 1 | |
| G-RR21 | 22S | | | SOLDER | SOLDER | 1 | |
| 20 | 22 | | | | | 1 | |
| 19 | 22 | | | SOLDER | SOLDER | 1 | |
| 18 | 22 | | | | | 1 | |
| 17 | 22 | | | | | 1 | |
| 16 | 22 | | | | SOLDER | 1 | |
| 15 | 22 | | | | S-1370-1 | 1 | |
| 14 | 22 | | | | SOLDER | 1 | |
| 13 | 22 | | | | SOLDER | 1 | |
| 12 | 18 | | | | S-1367-1-6 | 1 | |
| 11 | 22 | | | | SOLDER | 1 | |
| 10 | 22S | | | | | 1 | |
| 9 | 22 | | | | | 1 | |
| 8 | 22 | | | | | 1 | |
| 7 | 22 | | | | | 1 | |
| 6 | 22 | | | | | 1 | |
| 5 | 18 | | | | | 1 | |
| 4 | 22S | | | | | 1 | |
| 3 | 18 | | | | | 1 | |
| 2 | 18 | | | SOLDER | SOLDER | 1 | |
| G-RR1 | | | | | | | |
| WIRE CODE NO. OR PART NO. | GA | MATERIAL OR NOMENCLATURE | LG | TERMINALS | | -21 NO. REQ | SERIALS |

WIRE TABLE

NOTES:

Ⓑ

2 THE FOLLOWING CHANGES MUST BE MADE BEFORE THIS WIRE IS USED TO DIM THE LIGHTS: THE WHITE #22 WIRE THAT GOES FROM PIN "P" OF J-101 TO THE PRIMARY POWER CHANGEOVER TERMINAL BOARD MUST BE MOVED FROM TERM "E" TO TERM. "A". THE 180 Ω RESISTOR ATTACHED TO TERMINALS A & C MUST BE REMOVED. THE NO. 330 PANEL LAMP MUST BE REPLACED BY A NO. 327 LAMP.
LITE DIMMER WIRE CONNECTS TO FLOOD LITE DIM. RHEO. WITH STD LIGHTING. WHEN OPTIONAL POST LIGHTING IS INSTALLED CONNECT TO FLIGHT INST & RADIO DIAL LITE DIM. RESISTOR

4 PLUGS VENDOR FURNISHED

Ⓐ 5 TO BE USED WHEN THE RANGE-PWR UNIT IS INSTALLED IN THE FWD POSITION

Ⓐ 6 TO BE USED WHEN THE RANGE-PWR UNIT IS INSTALLED IN THE AFT POSITION

| ITEM NO. | PART NO. | DESCRIPTION | INSTALLED ON |
|---|---|---|---|

EQUIPMENT TABLE

CESSNA AIRCRAFT CO., COMMERCIAL AIRCRAFT DIVISION, WICHITA, KANSAS

| | NAME | DATE |
|---|---|---|
| DRAWN | Pokerson | 5-21-62 |
| GROUP | Warden | 5-22-62 |
| CHECK | E.F. Clark | 5-23-62 |
| PROJ | D. Nelson | 5-24-62 |

TITLE: WIRING DIAGRAM — NARCO DME (OPTIONAL)

Cessna.

DWG NO. 1470000

SUPERSEDED BY | SUPERSEDES | MODEL: 336 | REV B | PAGE: 17.5

G-RR21

FORM NO. BO-161

| CHG LET | REVISION | BY / DATE | CHK / APPD |
|---|---|---|---|
| A | ADDED [illegible] SWITCH | WHH 7-13-62 | [illegible] |

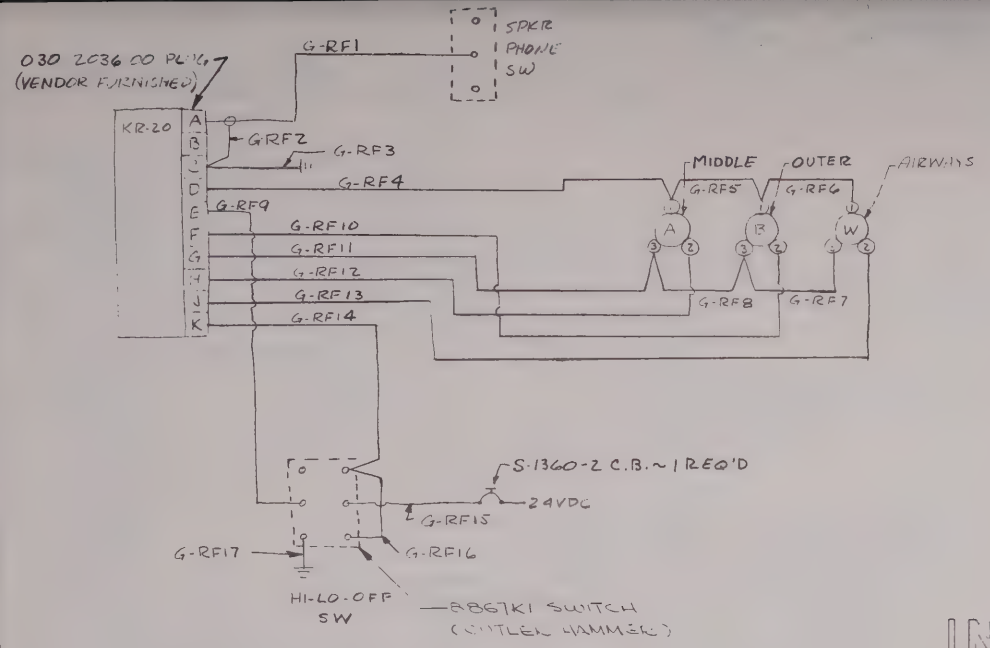


INACTIVE WHH 2-1-62
336-0162 & ON

NOTE
1. WIRES 22GA UNLESS NOTED
2 —o— DENOTES SHIELDED WIRE

| WIRE CODE NO | GA | MATERIAL | LG | TERMINALS | | SERIALS |
|---|---|---|---|---|---|---|
| | | | | | | |

WIRE TABLE

| ITEM NO | PART NO. | DESCRIPTION | INSTALLED ON |
|---|---|---|---|
| | | | |

EQUIPMENT TABLE

CESSNA AIRCRAFT CO. COMMERCIAL AIRCRAFT DIVISION WICHITA, KANSAS

| | NAME | DATE |
|---|---|---|
| DRAWN | ACKERSON | 3-12-62 |
| GROUP | warden | 5-22-62 |
| CHECK | E.L. Clark | 5-23-62 |
| PROJ | [illegible] | 5-26-62 |
| | [illegible] | |

TITLE: WIRING DIAGRAM — KING KR-20 MKR BCN RECEIVER (OPTIONAL)

Cessna.

DWG NO. 1470000

| SUPERSEDED BY | SUPERSEDES | MODEL | REV | PAGE |
|---|---|---|---|---|
| | | 336 | A | 17.6 |

FORM NO. 80-161

G-RF17

| CHG LET | REVISION | BY / DATE | CHK / APPD |
|---|---|---|---|
| A | DELETED NOTES 4, 5 & 7. ADDED, 10Ω 5WATT & 30Ω 5WATT AXIAL LEAD RESISTORS, B/M4 WIRES G-RD127, G-RD129, G-RD120, ADDED -20 CABLE ASSY | D.Z. 5-17-63 | RRS WHH RRD |

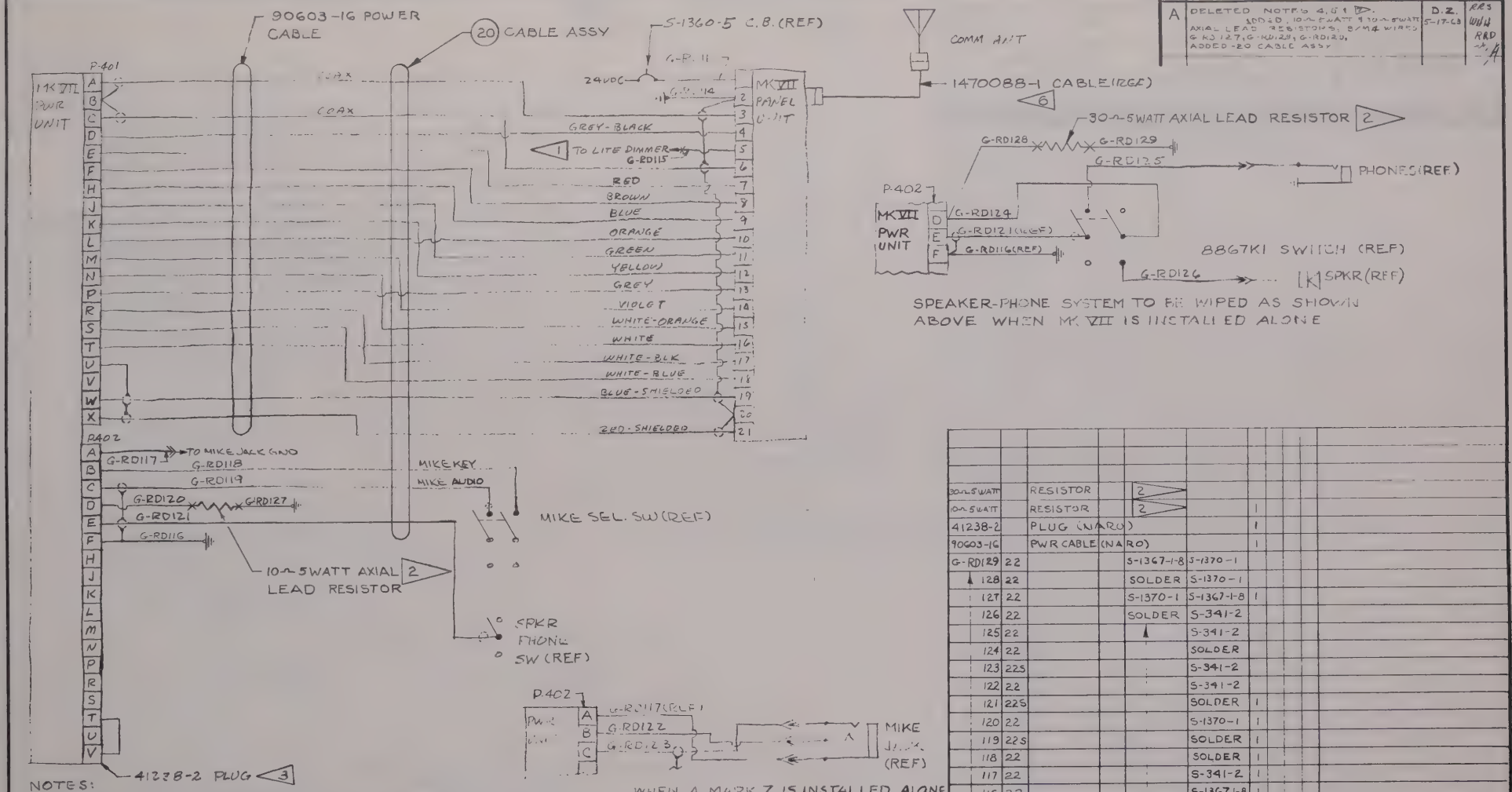


WHEN A MARK 7 IS INSTALLED ALONE THE MIKE JACK CONNECTIONS WILL BE MADE AS SHOWN ABOVE

NOTES:

1. LIGHT DIM. WIRE CONNECTS TO FLOOD LITE DIM. RHEO. WITH STD LIGHTING. WHEN OPTIONAL POST LIGHTING IS INSTALLED CONNECT TO FLIGHT INST. & RADIO DIAL LIGHT DIMMING RESISTOR
2. OHMITE "BROWN DEVIL" OR EQUIV. RESISTOR TO BE OMITTED WHEN A SINGLE INSTAL. IS MADE
3. PLUG VENDOR FURNISHED
6. SEE AUDIO SYSTEM WIRING FOR ANT. LEADIN IF DUAL INSTALLATION IS REQD.

| ITEM NO | PART NO. | DESCRIPTION | INSTALLED ON |
|---|---|---|---|
| | | EQUIPMENT TABLE | |

| WIRE CODE NO. OR PART NO. | GA | MATERIAL OR NOMENCLATURE | LG | TERMINALS | | -20 NO. REQ. N/A | SERIALS |
|---|---|---|---|---|---|---|---|
| 30Ω 5WATT | | RESISTOR | | 2 | | | |
| 10Ω 5WATT | | RESISTOR | | 2 | | 1 | |
| 41238-2 | | PLUG (NARO) | | | | 1 | |
| 90603-16 | | PWR CABLE (NARO) | | | | 1 | |
| G-RD129 | 22 | | | S-1367-1-8 | S-1370-1 | | |
| 128 | 22 | | | SOLDER | S-1370-1 | | |
| 127 | 22 | | | S-1370-1 | S-1367-1-8 | 1 | |
| 126 | 22 | | | SOLDER | S-341-2 | | |
| 125 | 22 | | | | S-341-2 | | |
| 124 | 22 | | | | SOLDER | | |
| 123 | 22S | | | | S-341-2 | | |
| 122 | 22 | | | | S-341-2 | | |
| 121 | 22S | | | | SOLDER | 1 | |
| 120 | 22 | | | | S-1370-1 | 1 | |
| 119 | 22S | | | | SOLDER | 1 | |
| 118 | 22 | | | | SOLDER | 1 | |
| 117 | 22 | | | | S-341-2 | 1 | |
| 116 | 22 | | | | S-1367-1-8 | 1 | |
| 115 | 22 | | | | S-1370-1 | 1 | |
| 114 | 18 | | | | S-1367-1-8 | 1 | |
| G-RD113 | 18 | | | SOLDER | S-1367-1-6 | 1 | |

WIRE TABLE

CESSNA AIRCRAFT CO. COMMERCIAL AIRCRAFT DIVISION WICHITA KANSAS

| | NAME | DATE |
|---|---|---|
| DRAWN | ACKERSON | 7-19-62 |
| GROUP | Warden | 8-7-62 |
| CHECK | E T Clark | 8-10-62 |
| PROJ | [illegible] | 8-13-62 |

TITLE: WIRING DIAGRAM — NARCO MK VII (OPTIONAL)

Cessna.

DWG NO. 1470000

SUPERSEDED BY | SUPERSEDES | MODEL 336 | REV A | PAGE: 17.8

FORM NO. 80-161

| CHG LET | REVISION | BY / DATE | CHK / APPD |
|---|---|---|---|
| | | | |

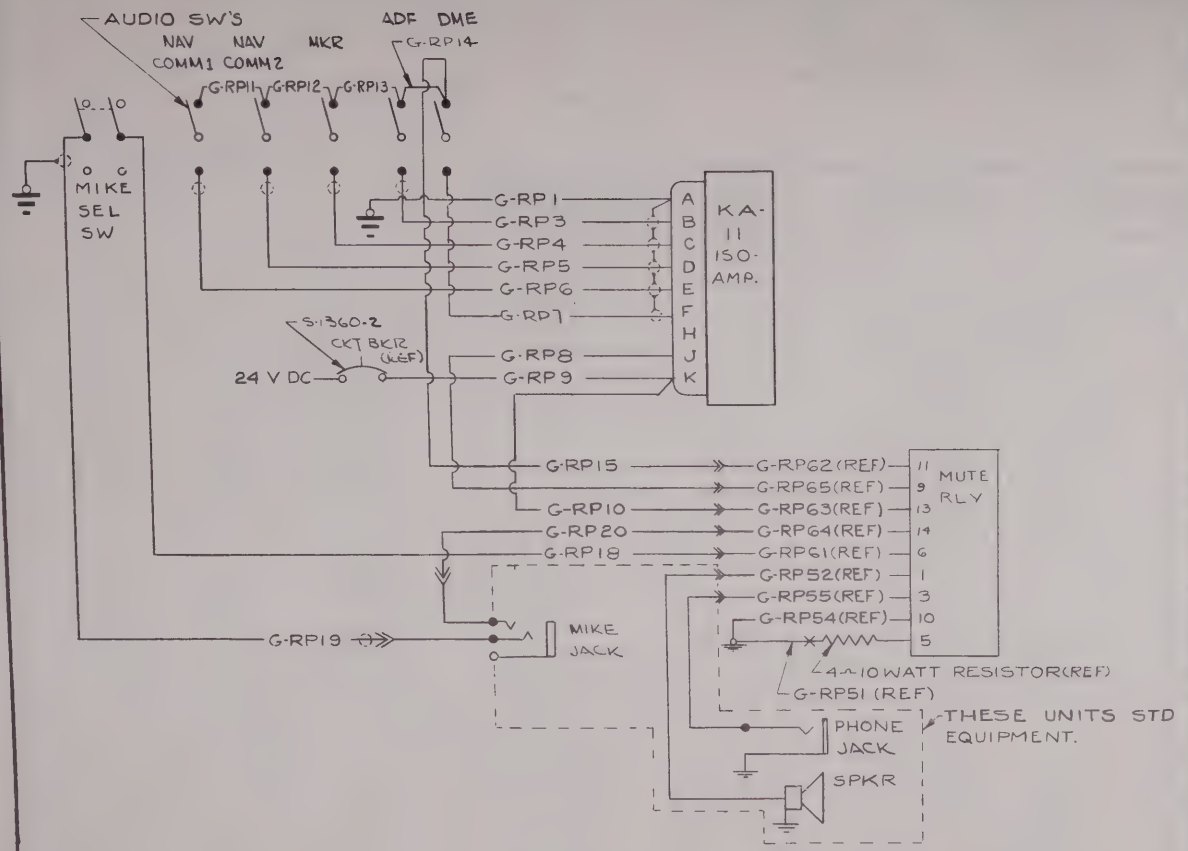


| WIRE CODE NO OR PART NO. | GA | MATERIAL OR NOMENCLATURE | LG | TERMINALS | | NO REQ N/A | SERIALS |
|---|---|---|---|---|---|---|---|
| G-RP 20 | 22 | | | S-341-2 | S-341-2 | | |
| 19 | 22S | | | SOLDER | S-341-2 | | |
| 18 | 22 | | | SOLDER | S-341-2 | | |
| 17 | | OMITTED | | SOLDER | SOLDER | | |
| 16 | | OMITTED | | | | | |
| 15 | 22 | | | SOLDER | S-341-2 | | |
| 14 | 22 | | | SOLDER | SOLDER | | |
| 13 | 22 | | | SOLDER | SOLDER | | |
| 12 | 22 | | | | SOLDER | | |
| 11 | 22 | | | | SOLDER | | |
| 10 | 22 | | | | SOLDER | | |
| 9 | 22 | | | | S1367-1-6 | | |
| 8 | 22 | | | SOLDER | S-341-2 | | |
| 7 | 22S | | | SOLDER | SOLDER | | |
| 6 | 22S | | | SOLDER | SOLDER | | |
| 5 | 22S | | | | | | |
| 4 | 22S | | | | | | |
| 3 | 22S | | | SOLDER | SOLDER | | |
| 2 | | OMITTED | | | | | |
| G-RP 1 | 22 | | | SOLDER | S-1367-1-8 | | |

WIRE TABLE

CESSNA AIRCRAFT CO., COMMERCIAL AIRCRAFT DIVISION, WICHITA, KANSAS

| | NAME | DATE |
|---|---|---|
| DRAWN | ZONGKER | 10-2-63 |
| GROUP | Warden | 10-15-63 |
| CHECK | R. Stuck | 11-25-63 |
| PROJ | [illegible] | 11-26-63 |
| | RRD [illegible] | |

TITLE: WIRING DIAGRAM — NARCO AUDIO SYSTEM (OPTIONAL)

Cessna.

DWG NO 1470000

| ITEM NO | PART NO. | DESCRIPTION | INSTALLED ON |
|---|---|---|---|

EQUIPMENT TABLE

SUPERSEDED BY | SUPERSEDES PAGE 17.9 | MODEL 336 | REV | PAGE: 17.9.1

FORM NO. 80-161

| CHG LET | REVISION | BY / DATE | CHK / APPD |
|---|---|---|---|
| | | | |

NOTES

1. PLUGS ARE VENDOR SUPPLIED.
2. LIGHT DIM WIRE CONNECTS TO FLOOD LIGHT DIMMING RHEOSTAT WITH STD PANEL LIGHT INSTAL. WHEN OPT POST LIGHTING IS INSTALLED. CONNECT TO FLIGHT INSTR & RADIO DIAL LIGHT DIMMING RESISTOR.
3. COAX CABLE CONNECTS TO VHF ANT. WHEN XCVR IS INSTALLED ALONE. REFER TO AUDIO & INTERCONNECTING SYSTEM (PG 17.11) FOR XMTR ANT. CONNECTIONS WHEN THIS UNIT IS INSTALLED WITH A SECOND TRANSMITTER.

INACTIVE WHH 12-30-63
SR436 [illegible] RRS [illegible]

| WIRE CODE NO OR PART NO. | GA | MATERIAL OR NOMENCLATURE | LG | TERMINALS | -8 NO REQ | -9 N/A | SERIALS |
|---|---|---|---|---|---|---|---|
| 28371-0005 | | PLUG 1 | | (ARC) | 1 | 1 | |
| 28808 | | PLUG 1 | | (ARC) | 2 | 2 | |

| WIRE CODE NO. OR PART NO. | GA | MATERIAL OR NOMENCLATURE | LG | TERMINALS | -8 NO REQ | -9 N/A | SERIALS |
|---|---|---|---|---|---|---|---|
| G-RD 230 | 18 | | | SOLDER | S-1367-1-6 | 1 | 1 |
| 229 | 22 | | | SOLDER | S-341-2 | 1 | 1 |
| 228 | | OMITTED | | | | | |
| 227 | 22 | | | SOLDER | S-341-2 | | 1 |
| 226 | 22S | | | | SOLDER | | 1 |
| 225 | 22 | | | | S-341-2 | | 1 |
| 224 | 22S | | | | S-341-2 | | 1 |
| 223 | 22 | | | | S-341-2 | | 1 |
| 222 | 22S | | | SOLDER | SOLDER | 1 | 1 |
| 221 | | OMITTED | | | | | |
| 220 | | OMITTED | | | | | |
| 219 | | OMITTED | | | | | |
| 218 | 22S | | | SOLDER | SOLDER | 1 | |
| 217 | | OMITTED | | | | | |
| 216 | 22 | | | SOLDER | SOLDER | 1 | |
| 215 | 22 | | | | | 1 | 1 |
| 214 | 22 | | | | SOLDER | 1 | 1 |
| 213 | 18 | | | | S-1367-1-8 | 1 | 1 |
| 212 | 18 | | | | SOLDER | 1 | 1 |
| 211 | 18 | | | | | 1 | 1 |
| 210 | 22 | | | | | 1 | 1 |
| 209 | 22 | | | | | 1 | 1 |
| 208 | 22 | | | | | 1 | 1 |
| 207 | 22 | | | | | 1 | 1 |
| 206 | 22S | | | | | 1 | 1 |
| 205 | 22 | | | | | 1 | 1 |
| 204 | 22 | | | | | 1 | 1 |
| G-RD203 | 22 | | | SOLDER | SOLDER | 1 | 1 |

WIRE TABLE

| ITEM NO | PART NO. | DESCRIPTION | INSTALLED ON |
|---|---|---|---|

EQUIPMENT TABLE

CESSNA AIRCRAFT CO. COMMERCIAL AIRCRAFT DIVISION WICHITA, KANSAS

| | NAME | DATE |
|---|---|---|
| DRAWN | ZONGKER | 11-26-63 |
| GROUP | Varden | 12-30-63 |
| CHECK | R. Stuck | 1-8-64 |
| PROJ | [illegible] | 1-11-64 |

TITLE: WIRING DIAGRAM — CESSNA TRANSCEIVER 500 (OPTIONAL) (ARC TYPE 302A)

Cessna.

DWG NO. 1470000

SUPERSEDED BY PG 17.10.2 | SUPERSEDES | MODEL 336 | REV | PAGE 17.10

FORM NO. 80-161

| CHG LET | REVISION | BY DATE | CHK APPD |
|---|---|---|---|
| | | | |

INACTIVE WHH 12-30-63 RRS
SR4362 & ON

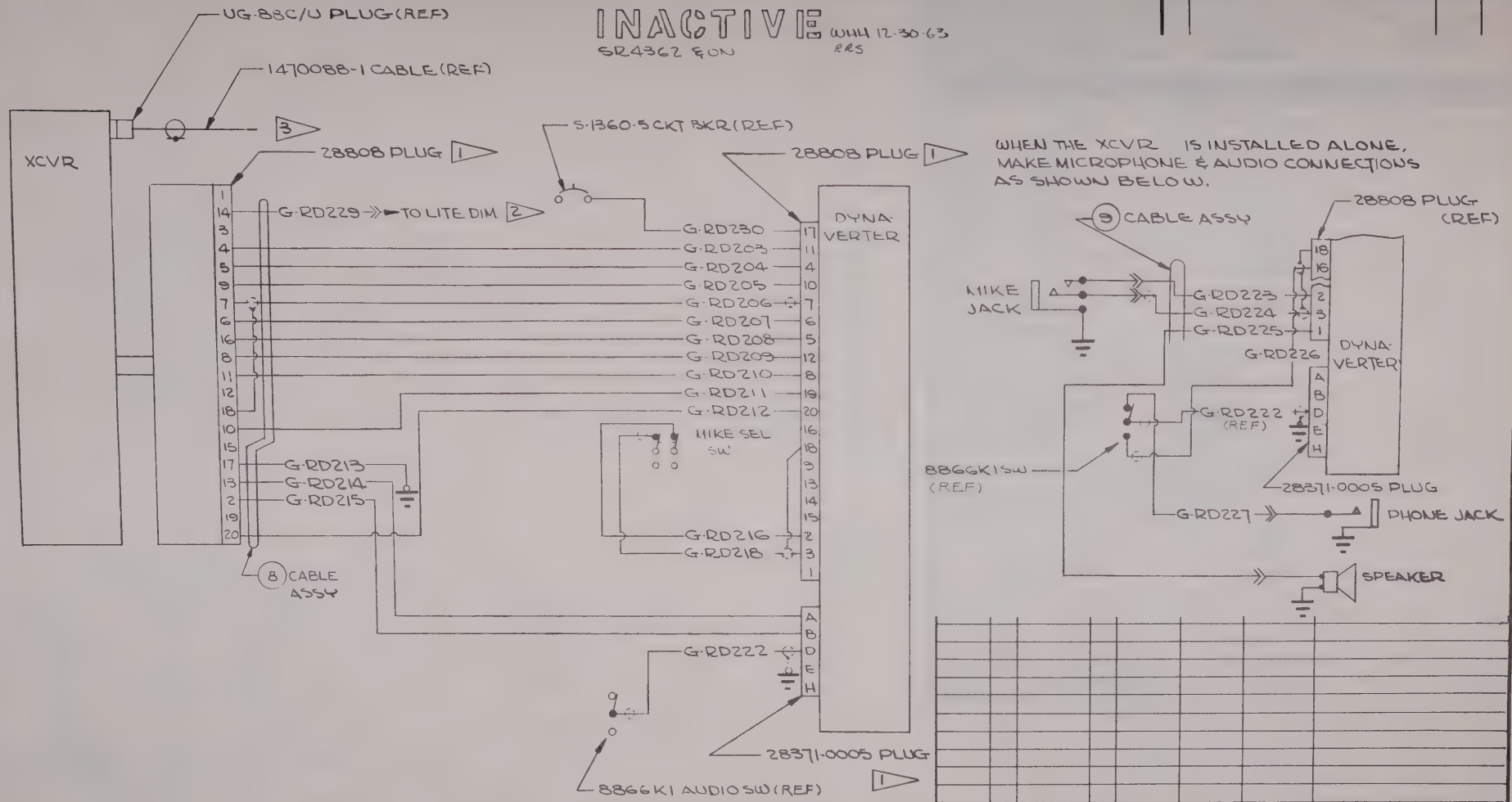


| WIRE CODE NO. | GA | MATERIAL | LG | TERMINALS | SERIALS |
|---|---|---|---|---|---|
| | | | | | |

WIRE TABLE

| ITEM NO | PART NO. | DESCRIPTION | INSTALLED ON |
|---|---|---|---|
| | | | |

EQUIPMENT TABLE

| | NAME | DATE |
|---|---|---|
| DRAWN | HARDEN | 11-4-63 |
| GROUP | Harden | 12-30-63 |
| CHECK | R. Stuck | 1-8-64 |
| PROJ | | |

TITLE: WIRING DIAGRAM — CESSNA TRANSCEIVER 500 (OPTIONAL) (ARC TYPE 302A)

Cessna.

DWG NO. 1470000

SUPERSEDED BY PGF 17.10.3 | SUPERSEDES | MODEL 336 | REV: | PAGE: 17.10.1

FORM NO. 80-151

G-RD203 THRU G-RD230

(SK4362)

| CHG LET | REVISION | BY / DATE | CHK / APPD |
|---|---|---|---|
| | | | |

NOTES:

1. PLUGS ARE VENDOR FURNISHED.
2. LIGHT DIM. WIRE CONNECTS TO FLOOD LIGHT DIM. RHEOSTAT WITH STD PANEL LIGHTING. WHEN OPT POST LIGHTING IS INSTALLED CONNECT TO FLIGHT INSTR & RADIO DIAL LIGHT DIMMING RESISTOR.
3. COAX CABLE CONNECTS TO VHF ANT WHEN XCVR IS INSTALLED ALONE. REFER TO AUDIO & INTERCONNECTING SYSTEM (17.11.1) FOR XMTR ANT. CONNECTIONS WHEN THIS UNIT IS INSTALLED WITH A SECOND TRANSMITTER
4. WIRE MATERIAL PER S-1460 UNLESS OTHERWISE NOTED.

| WIRE CODE NO OR PART NO | GA | MATERIAL OR NOMENCLATURE | LG | TERMINALS | | -8 NOT REQ'D N/A | -9 | | SERIALS |
|---|---|---|---|---|---|---|---|---|---|
| 28371-0005 | | PLUG 1 | | (ARC) | | 1 | 1 | | |
| 28808 | | PLUG 1 | | (ARC) | | 2 | 2 | | |
| GREEN | 20 | -20-5 | | SOLDER | S-341-2 | | 1 | | |
| BLU/YEL | 22S | S-1461-22-6-4 | | | SOLDER | 1 | 1 | | |
| BLUE | 22 | -22-6 | | | S-341-2 | | 1 | | |
| RED | 18 | -18-2 | | | S-1367-1-6 | 1 | 1 | | |
| WHT/BLK | 22 | -22-9-0 | | | S-341-2 | | 1 | | |
| TAN | 22S | S-1461-22-10 | | | S-341-2 | | 1 | | |
| BLU-BLK | 22S | S-1461-22-6-0 | | | SOLDER S-1367-1-8 | 1 | 1 | | |
| YELLOW | 18 | -18-4 | | | S-341-2 | 1 | 1 | | |
| BLACK | 18 | -18-0 | | | S-1367-1-8 | 1 | 1 | | |
| BLU-RED | 22S | S-1461-22-6-2 | | | SOLDER | 1 | 1 | | |
| BLK-WHT | 18 | -18-0-9 | | | | 1 | 1 | | |
| RED-BLK | 18 | -18-2-0 | | | | 1 | 1 | | |
| WHT-YEL | 22 | -22-9-4 | | | | 1 | 1 | | |
| BLU-YEL | | -22-6-4 | | | | 1 | 1 | | |
| TAN-YEL | | -22-10-4 | | | | 1 | 1 | | |
| TAN-RED | | -22-10-2 | | | | 1 | 1 | | |
| GRY-YEL | | -22-8-4 | | | | 1 | 1 | | |
| GRY-BLU | | -22-8-6 | | | | 1 | 1 | | |
| WHT-RED | | -22-9-2 | | | | 1 | 1 | | |
| BLK-RED | | -22-0-2 | | | | 1 | 1 | | |
| BLK-YEL | 22 | -22-0-4 | | SOLDER | SOLDER | 1 | 1 | | |

WIRE TABLE

CESSNA AIRCRAFT CO. COMMERCIAL AIRCRAFT DIVISION, WICHITA, KANSAS

| | NAME | DATE |
|---|---|---|
| DRAWN | ACKERSON | 11-19-63 |
| GROUP | Harden | 12-27-63 |
| CHECK | R. Stuck | 1-8-64 |
| PROJ | [illegible] | 1-11-64 |

TITLE: WIRING DIAGRAM — CESSNA TRANSCEIVER 500 (ARC TYPE 302A) (OPTIONAL)

Cessna.

DWG NO. 1470000

SUPERSEDED BY | SUPERSEDES PAGE 17.10 | MODEL 336 | REV | PAGE 17.10.2

| ITEM NO | PART NO. | DESCRIPTION | INSTALLED ON |
|---|---|---|---|
| | | | |

EQUIPMENT TABLE

(SR 4362)

| CHG LET | REVISION | BY DATE | CHK APPD |
|---|---|---|---|
| | | | |

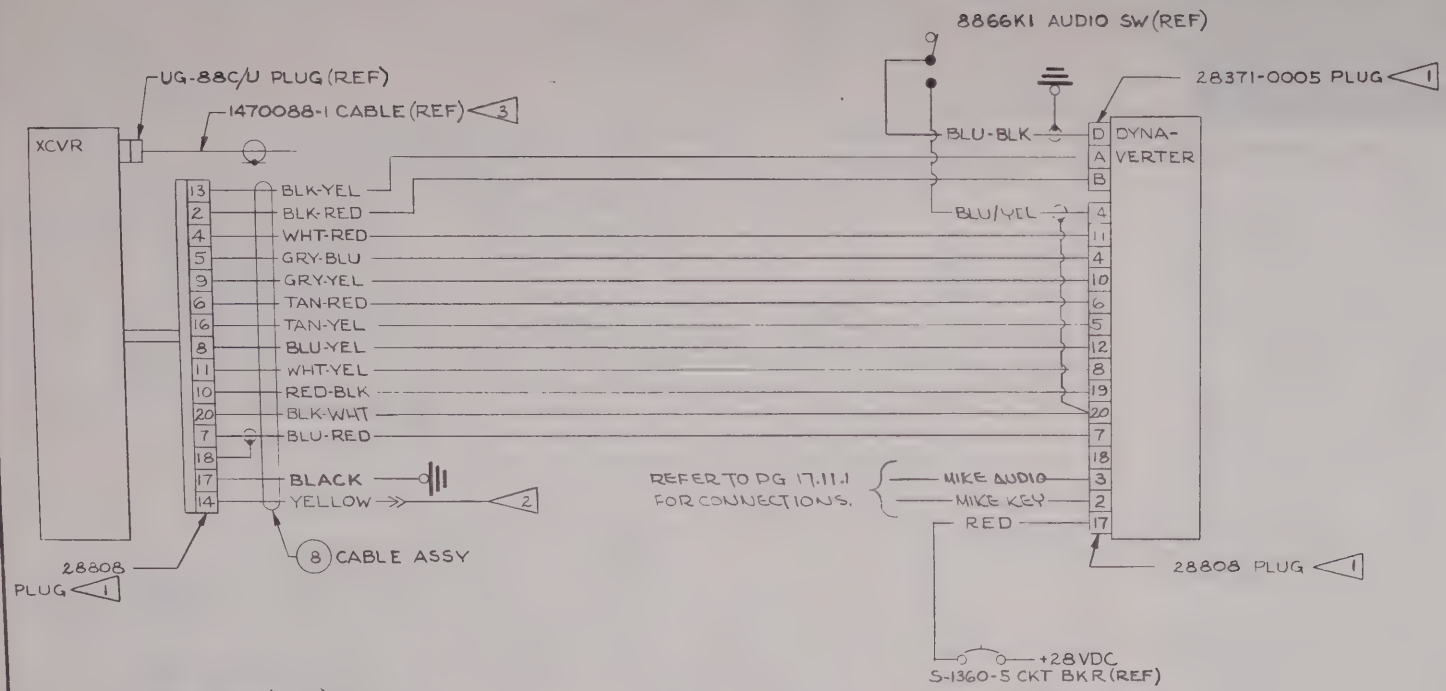


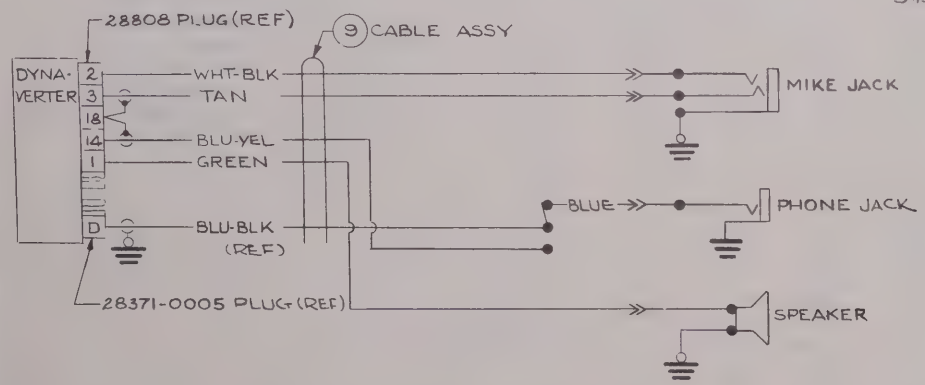


WHEN THE XCVR IS INSTALLED ALONE, MAKE MICROPHONE AND AUDIO CONNECTIONS AS SHOWN ABOVE.

| WIRE CODE NO | GA | MATERIAL | LG | TERMINALS | SERIALS |
|---|---|---|---|---|---|
| | | | | | |

WIRE TABLE

| ITEM NO | PART NO. | DESCRIPTION | INSTALLED ON |
|---|---|---|---|
| | | | |

EQUIPMENT TABLE

CESSNA AIRCRAFT CO., COMMERCIAL AIRCRAFT DIVISION, WICHITA, KANSAS

| | NAME | DATE |
|---|---|---|
| DRAWN | ACKERSON | 11-18-63 |
| GROUP | Hardin | 12-27-63 |
| CHECK | R. Stuck | 1-8-64 |
| PROJ | Johnson | 1-11-64 |

TITLE: WIRING DIAGRAM — CESSNA TRANSCEIVER 500 (ARC TYPE 302A) (OPTIONAL)

Cessna.

DWG NO. 1470000

SUPERSEDED BY

SUPERSEDES PAGE 17.10.1

MODEL 336

REV

PAGE 17.10.3

FORM NO. 80-161

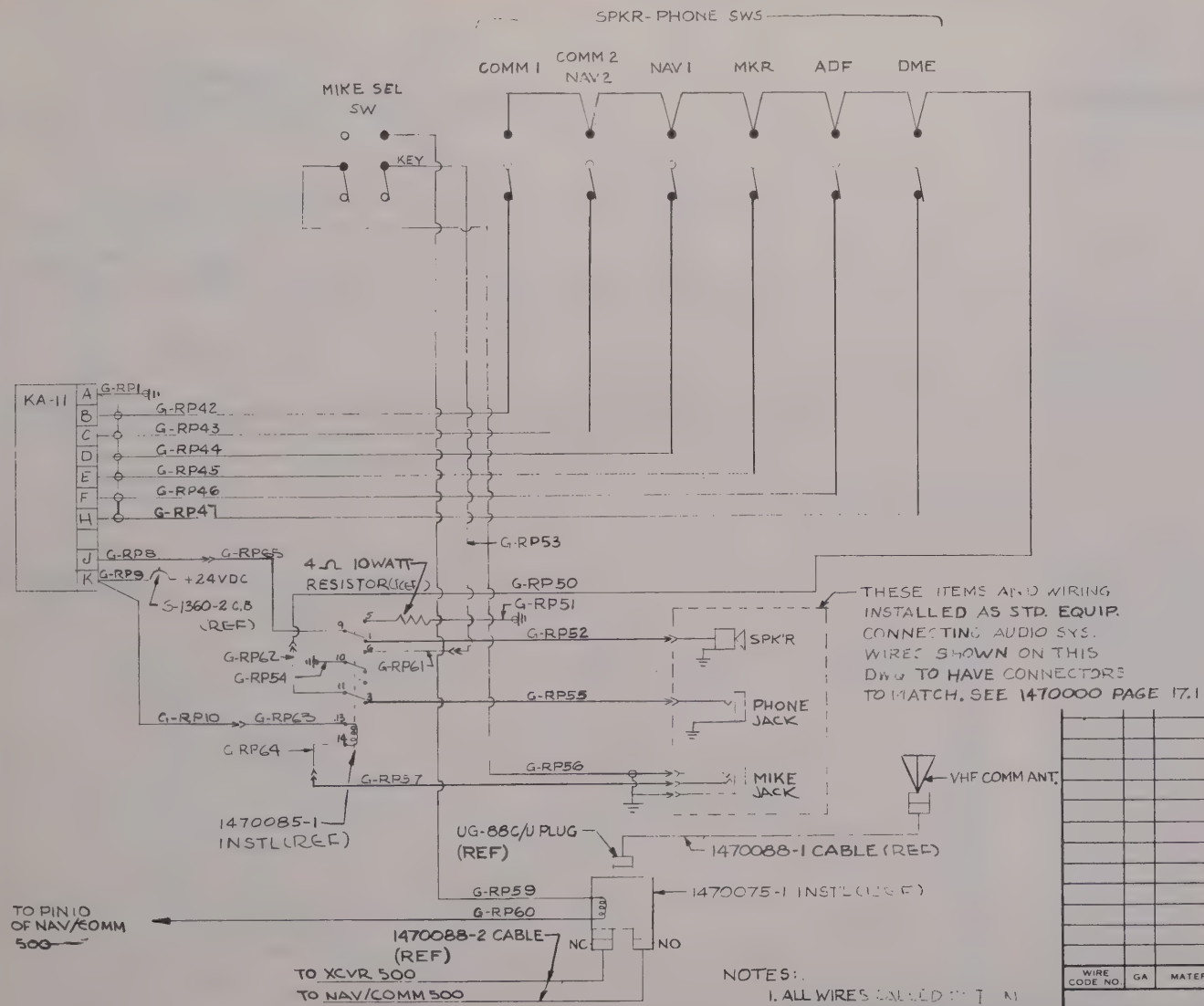


THESE ITEMS AND WIRING INSTALLED AS STD. EQUIP. CONNECTING AUDIO SYS. WIRES SHOWN ON THIS DWG TO HAVE CONNECTORS TO MATCH. SEE 1470000 PAGE 17.1

NOTES:

1. ALL WIRES CALLED [illegible] THIS PAGE ARE REF. SEE PAGES 17.31 & 17.15

| CHG LET | REVISION | BY / DATE | CHK / APPD |
|---|---|---|---|
| | | | |

| WIRE CODE NO. | GA | MATERIAL | LG | TERMINALS | | SERIALS |
|---|---|---|---|---|---|---|
| | | | | | | |

WIRE TABLE

CESSNA AIRCRAFT CO. COMMERCIAL AIRCRAFT DIVISION, WICHITA, KANSAS

| | NAME | DATE |
|---|---|---|
| DRAWN | ACKERSON | 2-7-63 |
| GROUP | [illegible] | 1-8-64 |
| CHECK | [illegible] | 1-8-64 |
| PROJ | [illegible] | 1-11-64 |

TITLE: WIRING DIAGRAM — AUDIO SYSTEM - CESSNA SERIES 500 (OPTIONAL)

Cessna.

DWG NO. 1470000

SUPERSEDED BY: PG 17.11.1 | SUPERSEDES | MODEL 336 | REV | PAGE: 17.11

| ITEM NO | PART NO. | DESCRIPTION | INSTALLED ON |
|---|---|---|---|
| | | | |

EQUIPMENT TABLE

FORM NO 80-161

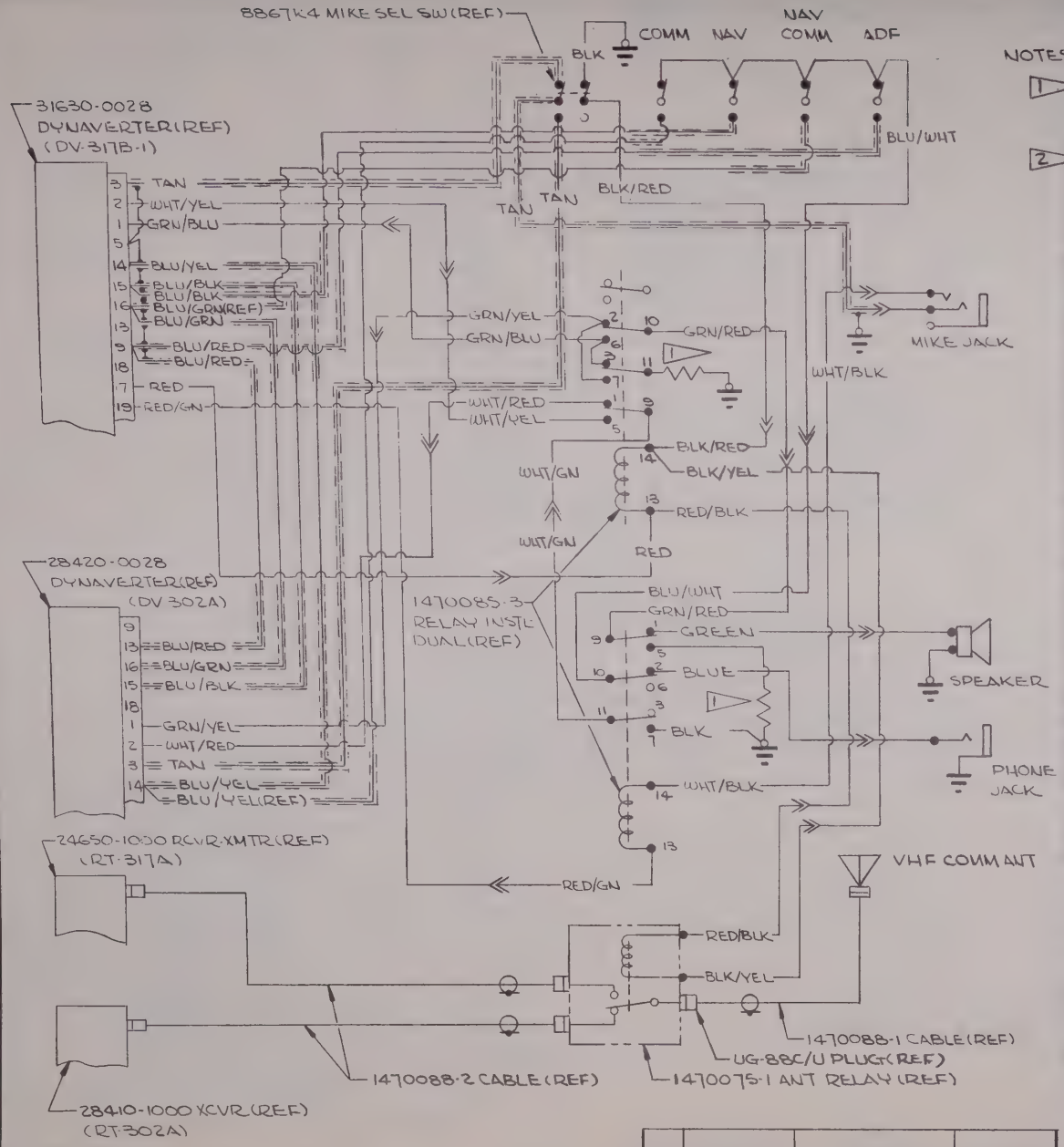


(SR4362)

| CHG LET | REVISION | BY DATE | CHK APPD |
|---|---|---|---|
| | | | |

NOTES:

1. 30 OHM, 2 WATT RES. OHMITE "LITTLE DEVIL" OR EQUIVALENT
2. ALL WIRES PER S-1460 UNLESS NOTED

| WIRE CODE NO. | GA | MATERIAL | LG | TERMINALS | | SERIALS |
|---|---|---|---|---|---|---|
| BLACK | 22 | -22-0 | | SOLDER | S-1367-1-8 | |
| GN/BLU | 20 | -20-5-6 | | S-341-2 | SOLDER | |
| TAN | 22S | S-1461-22-10 | | SOLDER | SOLDER | |
| TAN | 22S | S-1461-22-10 | | SOLDER | SOLDER | |
| TAN | 22S | S-1461-22-10 | | SOLDER | S-341-2 S-1367-1-8 | |
| BLU/WH | 22 | -22-6-9 | | S-341-2 | SOLDER | |
| BLU/WH | 22 | -22-6-9 | | SOLDER | S-341-2 | |
| BLUE | 22 | -22-6 | | SOLDER | S-341-2 | |
| RED/GN | 20 | -20-2-5 | | S-341-2 | SOLDER | |
| RED/GN | 20 | -20-2-5 | | SOLDER | S-341-2 | |
| RED/BLK | 18 | -18-2-0 | | S-341-2 | SOLDER | |
| RED/BLK | 18 | -18-2-0 | | SOLDER | S-341-2 | |
| RED | 18 | -18-2 | | S-341-2 | SOLDER | |
| RED | 18 | -18-2 | | SOLDER | S-341-2 | |
| BLK/YEL | 22 | -22-0-4 | | S-341-2 | SOLDER | |
| BLK/YEL | 22 | -22-0-4 | | SOLDER | S-341-2 | |
| BLK/RED | 22 | -22-0-2 | | S-341-2 | SOLDER | |
| BLK/RED | 22 | -22-0-2 | | SOLDER | S-341-2 | |
| BLACK | 22 | -22-0 | | SOLDER | S-1367-1-8 | |
| WHT/GN | 22 | -22-9-5 | | S-341-2 | SOLDER | |
| WHT/GN | 22 | -22-9-5 | | SOLDER | S-341-2 | |
| WHT/YEL | 22 | -22-9-4 | | S-341-2 | SOLDER | |
| WHT/YEL | 22 | -22-9-4 | | SOLDER | S-341-2 | |
| WHT/RED | 22 | -22-9-2 | | S-341-2 | SOLDER | |
| WHT/RED | 22 | -22-9-2 | | SOLDER | S-341-2 | |
| WHT/BLK | 22 | -22-9-0 | | | S-341-2 | |
| BLU/GN | 22S | S-1461-2265 | | | SOLDER | |
| BLU/YEL | 22S | -6-4 | | | | |
| BLU/RED | 22S | -6-2 | | | | |
| BLU/RED | 22S | -6-2 | | | | |
| BLU/BLK | 22S | -6-0 | | | | |
| BLU/BLK | 22S | S-1461-2266-0 | | SOLDER | SOLDER | |
| GN/BLU | 20 | -20-5-6 | | SOLDER | S-341-2 | |
| GN/YEL | 20 | -20-5-4 | | S-341-2 | SOLDER | |
| GN/YEL | 20 | -20-5-4 | | SOLDER | S-341-2 | |
| GN/RED | 20 | -20-5-2 | | S-341-2 | SOLDER | |
| GN/RED | 20 | -20-5-2 | | SOLDER | S-341-2 | |
| GREEN | 20 | -20-5 | | SOLDER | S-341-2 | |

2 WIRE TABLE

| ITEM NO | PART NO. | DESCRIPTION | INSTALLED ON |
|---|---|---|---|

EQUIPMENT TABLE

CESSNA AIRCRAFT CO. COMMERCIAL AIRCRAFT DIVISION, WICHITA, KANSAS

| | NAME | DATE |
|---|---|---|
| DRAWN | HARDEN | 10-4-63 |
| GROUP | Harden | 12-20-63 |
| CHECK | C Stuck | 1-8-64 |
| PROJ | D Johnson | 1-11-64 |

TITLE: WIRING DIAGRAM — AUDIO SYSTEM - CESSNA 500 SERIES RADIOS (OPTIONAL)

Cessna.

DWG NO. 1470000

SUPERSEDED BY.

SUPERSEDES PG 17.11

MODEL: 336

REV:

PAGE: 17.11.1

FORM NO. 80-161

| CHG LET | REVISION | BY / DATE | CHK / APPD |
|---|---|---|---|
| | | | |

NOTES:

1. PLUG ARE VENDOR SUPPLIED
2. THE DIAL LT DIMMING WIRE CONNECTS TO FLOOD LT DIMMING RHEOSTAT WITH STANDARD LIGHTING. WHEN OPT POST LIGHTING IS INSTALLED, CONNECT TO FLT INSTR & RADIO DIAL LT. DIMMING RESISTOR.

INACTIVE WHH 12-30-63
SR 4362 & ON

| WIRE CODE NO OR PART NO | GA | MATERIAL OR NOMENCLATURE | LG | TERMINALS | | -14 NO. REQ N/A | SERIALS |
|---|---|---|---|---|---|---|---|
| 27825 | (ARC) | 1 | | | | 1 | |
| 27826 | (ARC) | 1 | | | | 1 | |
| 28822 | (ARC) | 1 | | | | 2 | |
| G-RG34 | 22 | | | SOLDER | SOLDER | 1 | |
| 33 | 22S | | | SOLDER | SOLDER | 1 | |
| 32 | 22S | | | | | 1 | |
| 31 | 22S | | | | | 1 | |
| G-RG30 | 22 | | | SOLDER | SOLDER | 1 | |

| WIRE CODE NO OR PART NO | GA | MATERIAL OR NOMENCLATURE | LG | TERMINALS | | -14 NO. REQ N/A | SERIALS |
|---|---|---|---|---|---|---|---|
| G-RG29 | 22 | | | SOLDER | SOLDER | 1 | |
| 28 | 22 | | | | | 1 | |
| 27 | 22 | | | | | 1 | |
| 26 | 22 | | | | | 1 | |
| 25 | 22 | | | | | 1 | |
| 24 | 22 | | | | | 1 | |
| 23 | 22 | | | | | 1 | |
| 22 | 22 | | | | | 1 | |
| 21 | 22S | | | | | 1 | |
| 20 | 22S | | | | | 1 | |
| 19 | 18 | | | | SOLDER | 1 | |
| 18 | 22 | | | | S-341-2 | 1 | |
| 17 | 22 | | | | SOLDER | 1 | |
| 16 | 22 | | | | | 1 | |
| 15 | 22 | | | | | 1 | |
| 14 | 22 | | | | | 1 | |
| 13 | 22 | | | | | 1 | |
| 12 | 22 | | | | | 1 | |
| 11 | 22 | | | | | 1 | |
| 10 | 22 | | | | | 1 | |
| 9 | 22 | | | | | 1 | |
| 8 | 22 | | | | | 1 | |
| 7 | 22 | | | | | 1 | |
| 6 | 22 | | | | SOLDER | 1 | |
| 5 | 18 | | | | S-1367-1-8 | 1 | |
| 4 | 18 | | | | SOLDER | 1 | |
| 3 | 18 | | | | SOLDER | 1 | |
| 2 | 18 | | | | SOLDER | 1 | |
| G-RG 1 | 18 | | | SOLDER | S-1367-1-6 | 1 | |

WIRE TABLE

CESSNA AIRCRAFT CO. COMMERCIAL AIRCRAFT DIVISION, WICHITA, KANSAS

| | NAME | DATE |
|---|---|---|
| DRAWN | ZONGKER | 11-7-63 |
| GROUP | Darden | 12-30-63 |
| CHECK | R. Stark | 1-8-64 |
| PROJ | [illegible] | 1-11-64 |

TITLE: WIRING DIAGRAM — CESSNA NAV/OMNI 500 (OPTIONAL) (ARC TYPE 319A)

Cessna.

DWG NO. 1470000

| ITEM NO | PART NO. | DESCRIPTION | INSTALLED ON |
|---|---|---|---|
| | | | |

SUPERSEDED BY PG 17.12.2 | SUPERSEDES | MODEL 336 | REV | PAGE 17.12

FORM NO. 80-161

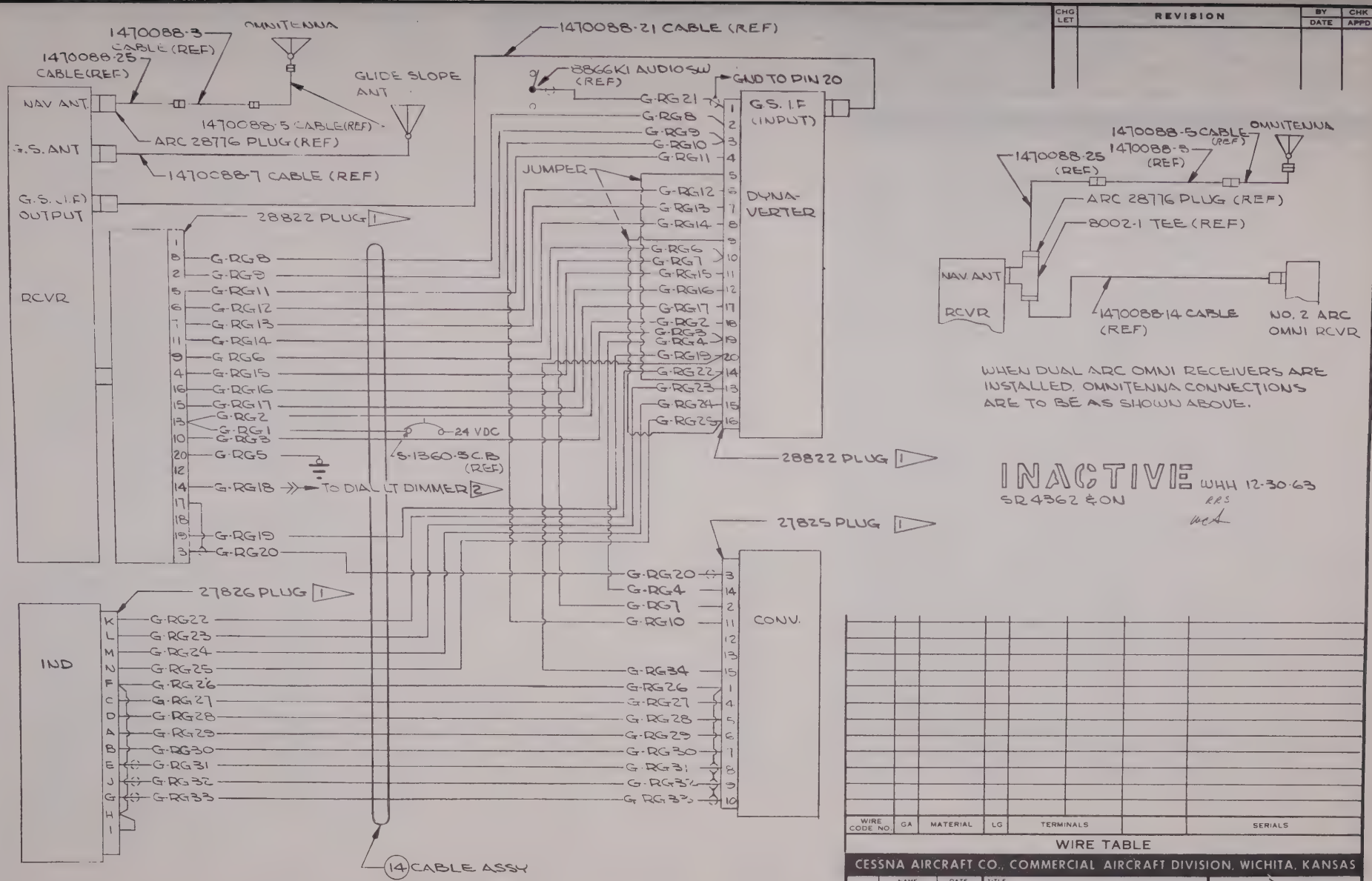


| CHG LET | REVISION | BY DATE | CHK APPD |
|---|---|---|---|
| | | | |

WHEN DUAL ARC OMNI RECEIVERS ARE INSTALLED, OMNITENNA CONNECTIONS ARE TO BE AS SHOWN ABOVE.

INACTIVE SR4362 & ON WHH 12-30-63 RRS

| WIRE CODE NO. | GA | MATERIAL | LG | TERMINALS | | SERIALS |
|---|---|---|---|---|---|---|
| | | | | | | |

WIRE TABLE

| ITEM NO | PART NO. | DESCRIPTION | INSTALLED ON |
|---|---|---|---|
| | | | |

EQUIPMENT TABLE

CESSNA AIRCRAFT CO., COMMERCIAL AIRCRAFT DIVISION, WICHITA, KANSAS

| | NAME | DATE |
|---|---|---|
| DRAWN | HARDEN | 11-7-63 |
| GROUP | Harden | 12-30-63 |
| CHECK | R. Stitt | 1-4-64 |
| PROJ | G. Johnson | 1-14-64 |

TITLE: WIRING DIAGRAM — CESSNA NAV/OMNI 500 (OPTIONAL) (ARC TYPE 319A)

Cessna.

DWG NO. 1470000

| SUPERSEDED BY | SUPERSEDES | MODEL: | REV: | PAGE: |
|---|---|---|---|---|
| PG 17.12.3 | | 336 | | 17.12.1 |

FORM NO. 80-161

(SR4362)

| CHG LET | REVISION | BY DATE | CHK APPD |
|---|---|---|---|
| | | | |

| WIRE C R | GA | MATERIAL 3 | LG | TERMINALS | | -14 NEXT ASSY | SERIALS |
|---|---|---|---|---|---|---|---|
| 27826 | | PLUG(ARC) | | | | 1 | |
| 27825 | | PLUG(ARC) | | | | 1 | |
| 28822 | | PLUG(ARC) | | | | 2 | |
| BLU-RED | 22S | S-1461-22-6-2 | | SOLDER | SOLDER | 1 | |
| BLU-BLK | 22S | S-1461-22-6-0 | | | | 1 | |
| BLU-WHT | 22S | S-1461-22-6-9 | | | | 1 | |
| WHT-RED | 22 | -22-9-2 | | | | 1 | |
| GRY-BLU | | -22-8-6 | | | | 1 | |
| WHT-TAN | | -22-9-10 | | | | 1 | |
| BLU-WHT | | -22-6-9 | | | | 1 | |
| BLK-YEL | | -22-0-4 | | | | 1 | |
| BLU-RED | | -22-6-2 | | | | 1 | |
| TAN-YEL | | -22-10-4 | | | | 1 | |
| BLU-TAN | | -22-6-10 | | | | 1 | |
| BLU-YEL | | -22-6-4 | | | | 1 | |
| BLK-WHT | | -22-0-9 | | | | 1 | |
| BLU-BLK | | -22-6-0 | | | | 1 | |
| TAN-BLU | 22 | -22-10-6 | | | | 1 | |
| RED-BLK | 18 | -18-2-0 | | | | 1 | |
| BLU-WHT | 22S | S-1461-22-6-9 | | | | 1 | |
| BLU-YEL | 22S | S-1461-22-6-4 | | | | 1 | |
| BLACK | 18 | -18-0 | | | SOLDER | 1 | |
| YELLOW | | -18-4 | | | S-341-2 | 1, | |
| BLK-WHT | | -18-0-9 | | | S-1367-1-8 | 1 | |
| RED-WHT | | -18-2-9 | | | SOLDER | 1 | |
| RED | | -18-2 | | | S-1367-1-6 | 1 | |
| RED | 18 | -18-2 | | | SOLDER | 1 | |
| RED-GRN | 20 | -20-2-5 | | | | 1 | |
| WHT-YEL | 22 | -22-9-4 | | | | 1 | |
| GRY-YEL | | -22-8-4 | | | | 1 | |
| BLU-GRN | | -22-6-5 | | | | 1 | |
| WHT-BLK | 22 | -22-9-0 | | | | 1 | |
| BLU-TAN | 22S | S-1461-22-6-10 | | | | 1 | |
| WHT-GRN | 22 | -22-9-5 | | | | 1 | |
| TAN-RED | | -22-10-2 | | | | 1 | |
| TAN-WHT | | -22-10-9 | | | | 1 | |
| WHT-BLU | 22 | -22-9-6 | | SOLDER | SOLDER | 1 | |

WIRE TABLE

NOTES:

1. PLUGS VENDOR FURNISHED.
2. LIGHT DIMMING WIRE CONNECTS TO FLOOD LIGHT DIMMING RHEOSTAT WITH STANDARD LIGHTING. WHEN OPTIONAL POST LIGHTING IS INSTALLED CONNECT TO FLIGHT INSTS. AND RADIO DIAL LIGHT DIMMING RESISTOR.
3. WIRE MATL PER S-1460 UNLESS NOTED.

| ITEM NO | PART NO. | DESCRIPTION | INSTALLED ON |
|---|---|---|---|
| | | | |

EQUIPMENT TABLE

CESSNA AIRCRAFT CO., COMMERCIAL AIRCRAFT DIVISION, WICHITA, KANSAS

| | NAME | DATE |
|---|---|---|
| DRAWN | AKERSON | 11-25-63 |
| GROUP | Warden | 12-30-63 |
| CHECK | R. Stuck | 1-8-64 |
| PROJ | [illegible] | 1-11-64 |
| ENGR | | |

TITLE: WIRING DIAGRAM — CESSNA NAV/OMNI 500 (OPTIONAL) (ARC TYPE 319A)

Cessna.

DWG NO 1470000

| SUPERSEDED BY | SUPERSEDES PG 17.12 | MODEL 336 | REV | PAGE 17.12.2 |
|---|---|---|---|---|

FORM NO BO-181

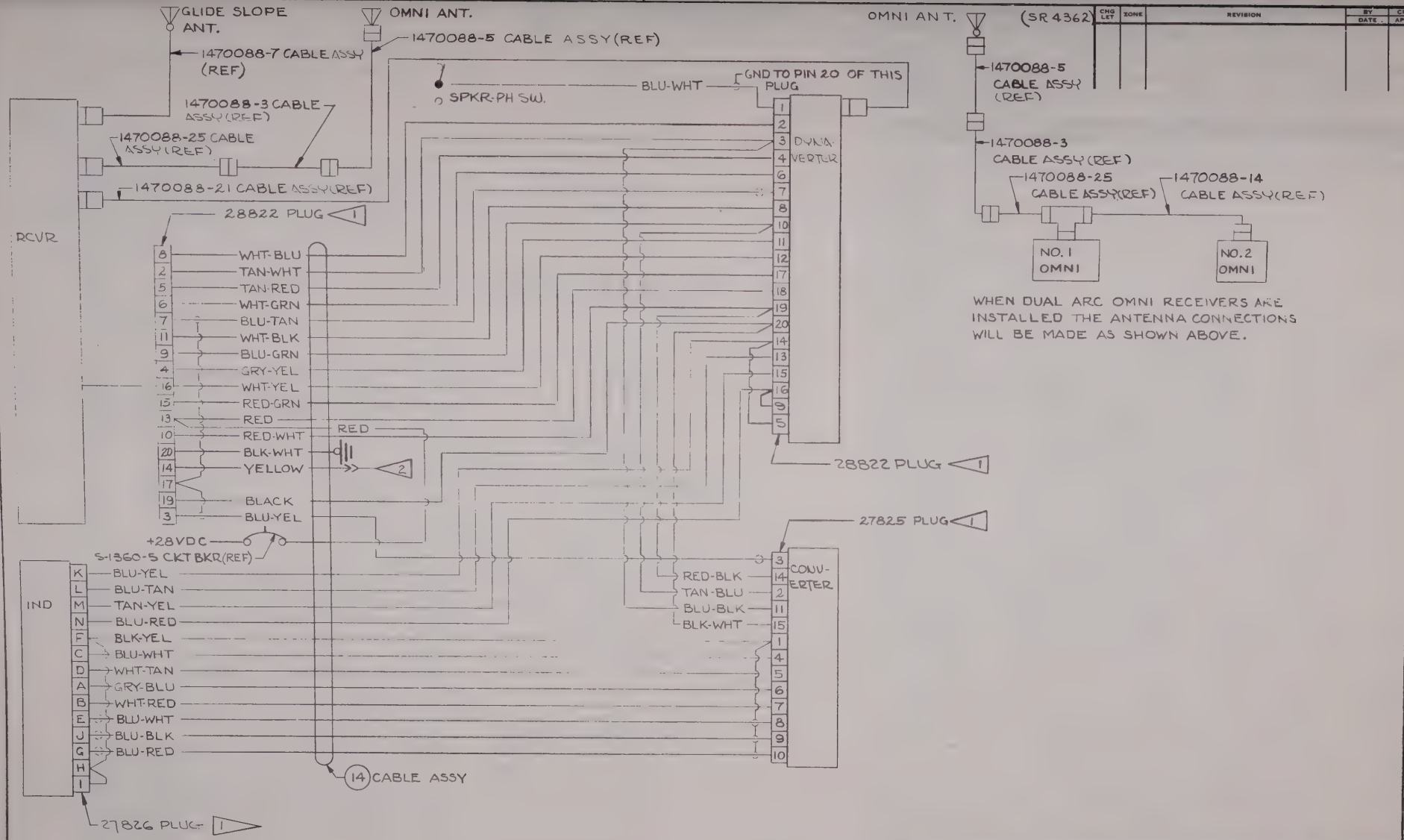


| CHG LET | ZONE | REVISION | BY DATE | CHK APPD |
|---|---|---|---|---|
| | | | | |

CESSNA AIRCRAFT CO., COMMERCIAL AIRCRAFT DIVISION, WICHITA, KANSAS

| | NAME | DATE |
|---|---|---|
| DRAWN | Ackerson | 11-25-63 |
| GROUP | [illegible] | 1-3-64 |
| CHECK | R. Stuck | 1-8-64 |
| STRESS | [illegible] | 1-9-64 |
| PROJ | [illegible] | 1-11-64 |

SUPERSEDED BY [illegible]

TITLE: WIRING DIAGRAM - CESSNA NAV/OMNI 500 (OPTIONAL) (ARC TYPE 319A)

Cessna.

DWG NO. 1470000

SUPERSEDES: PG 17.12.1 | MODEL: 336 | REV: | PAGE 17.12.3

FORM NO 80-156

| CHG LET | REVISION | BY / DATE | CHK / APPD |
|---|---|---|---|
| A | ADDED NOTE 6 DELETED NOTES 1 & 5 ADDED 1470088-28 (REF) ADDED -15 CABLE ASSY & B/M. DELETED NOTE 4. ADDED K11176-3 FILTER CHOKE. TITLE WAS ARC TYPE 318A ADF RECEIVER (OPT) | WHH 8-13-63 | RRS |

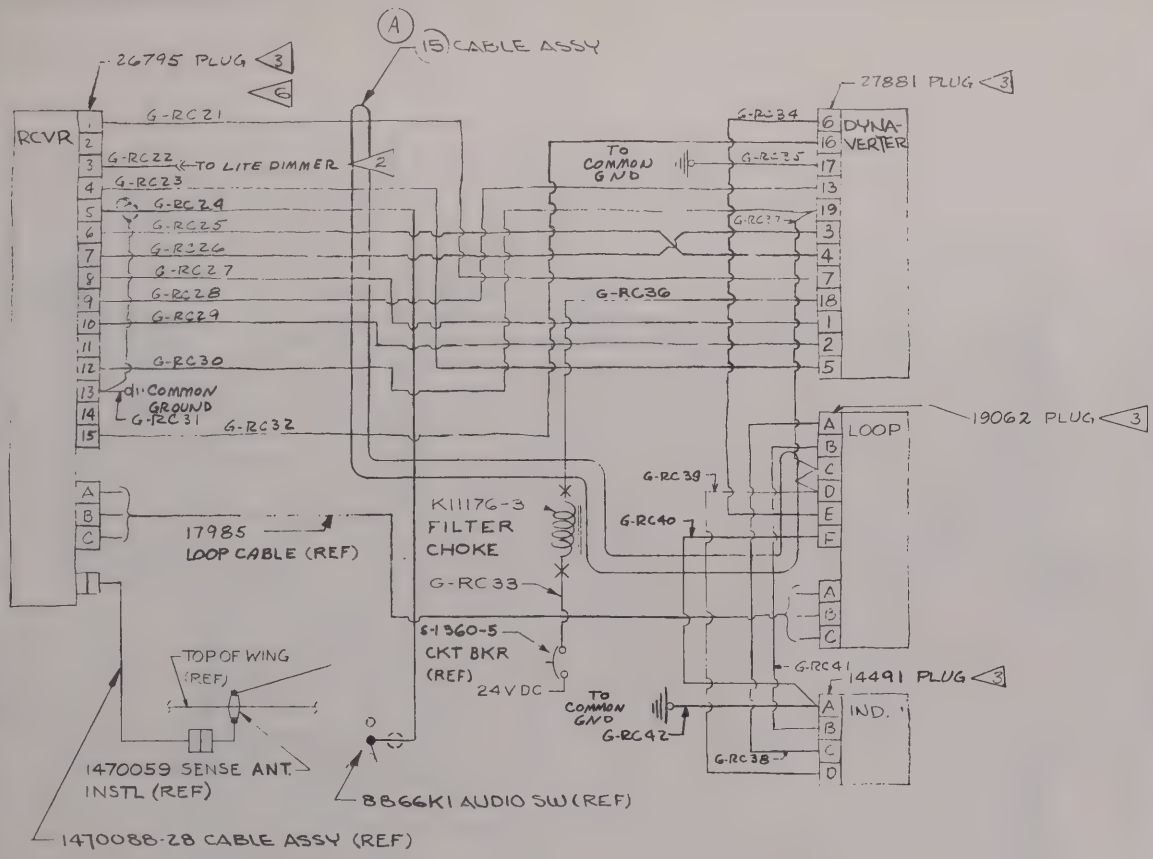


INACTIVE (SR4362) & ON WHH 1-3-64 RRS

NOTE:

2 LITE DIMMER WIRE CONNECTS TO FLOOD LITE DIMMING RHEOSTAT WITH STD LIGHTING. WHEN OPTIONAL POST LIGHTS ARE INSTALLED CONNECT TO FLIGHT INST. & RADIO DIAL LIGHT DIMMING RESISTOR

3 PLUGS VENDOR FURNISHED.

6 FOR TSO'D INSTALLATIONS CONNECT ARC 27859 FILTER ASSY BETWEEN ARC 26795 PLUG & PIGTAIL ON TUNER

| WIRE CODE NO. OR PART NO | GA | MATERIAL OR NOMENCLATURE | LG | TERMINALS | | 15 NO REQ N/A | SERIALS |
|---|---|---|---|---|---|---|---|
| K11176-3 | | FILTER CHOKE (NARO) | | | | 1 | |
| 14491 | | PLUG (ARC) 3 | | | | 1 | |
| 19062 | | PLUG | | | | 1 | |
| 27881 | | PLUG | | | | 1 | |
| 26795 | | PLUG (ARC) 3 | | | | 1 | |
| G-RC42 | 22 | | | SOLDER | S-1367-1-8 | 1 | |
| 41 | 22 | | | | SOLDER | 1 | |
| 40 | 22 | | | | | 1 | |
| 39 | 22 | | | | | 1 | |
| 38 | 22 | | | | | 1 | |
| 37 | 22 | | | | SOLDER | 1 | |
| 36 | 18 | | | | S-1370-1 | 1 | |
| 35 | 22 | | | | S-1367-1-8 | 1 | |
| 34 | 22 | | | SOLDER | SOLDER | 1 | |
| 33 | 18 | | | S-1370-1 | S-1367-1-6 | 1 | |
| 32 | 22 | | | SOLDER | SOLDER | 1 | |
| 31 | 22 | | | | S-1367-1-6 | 1 | |
| 30 | 22 | | | | SOLDER | 1 | |
| 29 | 22 | | | | | 1 | |
| 28 | 22 | | | | | 1 | |
| 27 | 22 | | | | | 1 | |
| 26 | 22 | | | | | 1 | |
| 25 | 22 | | | | | 1 | |
| 24 | 22S | | | | | 1 | |
| 23 | 22 | | | | SOLDER | 1 | |
| 22 | 22 | | | | S-341-2 | 1 | |
| G-RC21 | 22 | | | SOLDER | SOLDER | 1 | |

WIRE TABLE

CESSNA AIRCRAFT CO. COMMERCIAL AIRCRAFT DIVISION WICHITA, KANSAS

| | NAME | DATE |
|---|---|---|
| DRAWN | ACKERSON | 3-15-62 |
| GROUP | Warden | 8-7-62 |
| CHECK | [illegible] | 8-10-62 |
| PROJ | [illegible] | 8-13-62 |

TITLE: WIRING DIAGRAM — CESSNA ADF 500 RECEIVER (ARC TYPE 318A) (OPT)

Cessna.

DWG NO. 1470000

SUPERSEDED BY PG 17.13.2 | SUPERSEDES | MODEL: 336 | REV. A | PAGE: 17.13

| ITEM NO | PART NO. | DESCRIPTION | INSTALLED ON |
|---|---|---|---|

EQUIPMENT TABLE

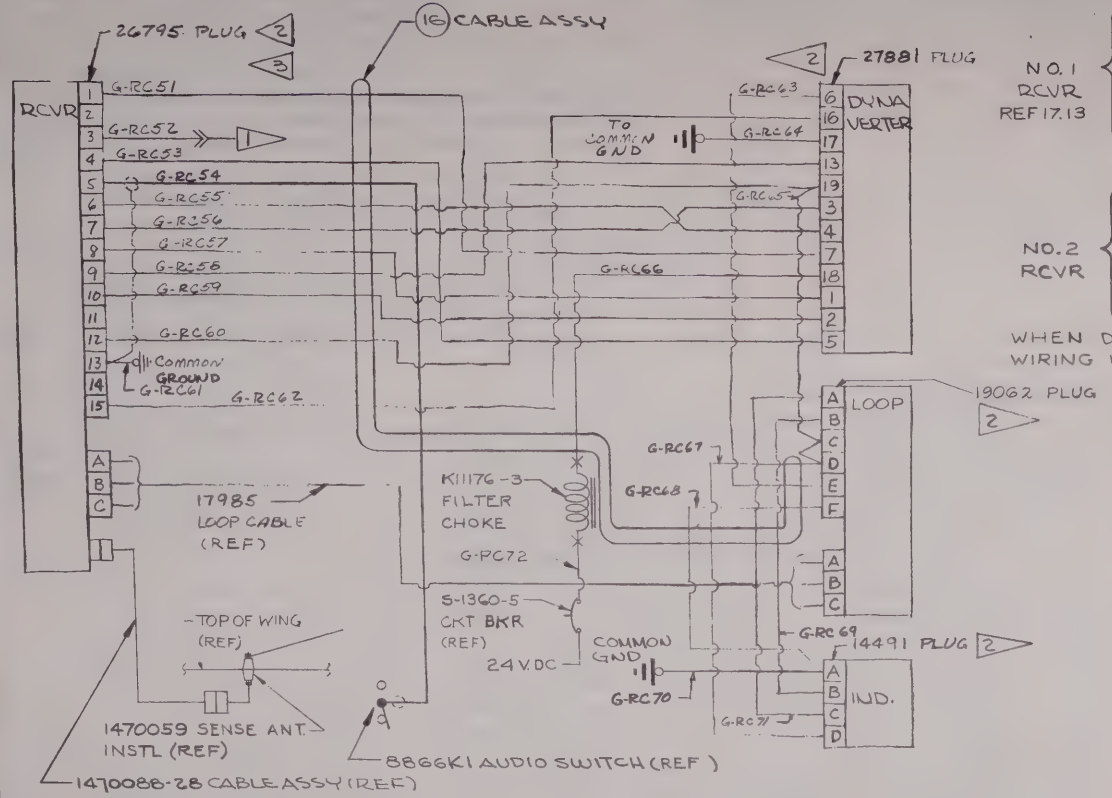


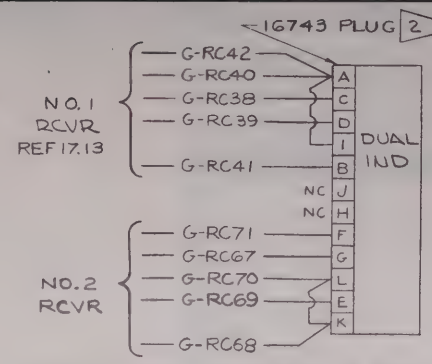


WHEN DUAL INDICATOR IS REQD WIRING WILL BE AS SHOWN ABOVE

| CHG LET | REVISION | BY / DATE | CHK / APPD |
|---|---|---|---|
| | | | |

| | | | | | | | |
|---|---|---|---|---|---|---|---|
| K1176-3 | | FILTER CHOKE (NARO) | | | | 1 | |
| 16743 | | PLUG | (ARC) 2 | | | 1 | |
| 14491 | | PLUG | | | | 1 | |
| 19062 | | PLUG | | | | 1 | |
| 27881 | | PLUG | | | | 1 | |
| 26795 | | PLUG | (ARC) 2 | | | 1 | |
| G-RC72 | 18 | | S-1370-1 | S-1367-1-6 | | 1 | |
| 71 | 22 | | SOLDER | SOLDER | | 1 | |
| 70 | 22 | | | S-1367-1-8 | | 1 | |
| 69 | 22 | | | SOLDER | | 1 | |
| 68 | 22 | | | SOLDER | | 1 | |
| 67 | 22 | | | SOLDER | | 1 | |
| 66 | 18 | | | S-1370-1 | | 1 | |
| 65 | 22 | | | SOLDER | | 1 | |
| 64 | 22 | | | S-1367-1-8 | | 1 | |
| 63 | 22 | | | SOLDER | | 1 | |
| 62 | 22 | | | SOLDER | | 1 | |
| 61 | 22 | | | S-1367-1-8 | | 1 | |
| 60 | 22 | | | SOLDER | | 1 | |
| 59 | 22 | | | | | 1 | |
| 58 | 22 | | | | | 1 | |
| 57 | 22 | | | | | 1 | |
| 56 | 22 | | | | | 1 | |
| 55 | 22 | | | | | 1 | |
| 54 | 22S | | | | | 1 | |
| 53 | 22 | | | SOLDER | | 1 | |
| 52 | 22 | | | S-341-2 | | 1 | |
| G-RC51 | 22 | | SOLDER | SOLDER | | 1 | |
| WIRE CODE NO OR PART NO. | GA | MATERIAL OR NOMENCLATURE | LG | TERMINALS | -16 NO. REQ | N/A | SERIALS |

WIRE TABLE

NOTE:

1. LITE DIMMER WIRE, CONNECTS TO FLOOD LITE DIMMING RHEOSTAT WITH STD LIGHTING. WHEN OPTIONAL POST LIGHTS ARE INSTALLED CONNECT TO FLIGHT INST. & RADIO DIAL LIGHT DIMMING RESISTOR
2. PLUGS VENDOR FURNISHED.
3. FOR TSO'D INSTALLATIONS CONNECT ARC 27855 FILTER ASSY BETWEEN ARC 26795 PLUG & PIGTAIL ON TUNER UNIT.

INACTIVE (SR436L) & ON WHH 1-3-64 ORS

| ITEM NO | PART NO. | DESCRIPTION | INSTALLED ON |
|---|---|---|---|
| | | | |

EQUIPMENT TABLE

CESSNA AIRCRAFT CO. COMMERCIAL AIRCRAFT DIVISION, WICHITA, KANSAS

| | NAME | DATE |
|---|---|---|
| DRAWN | ACKERSON | 8-19-63 |
| GROUP | Vardeman | 9-10-63 |
| CHECK | R. Stuck | 9-11-63 |
| PROJ | D. Peterson | 1-13-65 |
| | APPROVED | |

TITLE: WIRING DIAGRAM — SECOND CESSNA ADF 500 RECEIVER (ARC TYPE 318A) (OPT)

Cessna.

DWG NO. 1470000

SUPERSEDED BY CG 17.13.2 | SUPERSEDES | MODEL 336 | REV | PAGE 17.13.1

FORM NO 80-161

(SR4362)

| CHG LET | REVISION | BY / DATE | CHK / APPD |
|---|---|---|---|
| | | | |

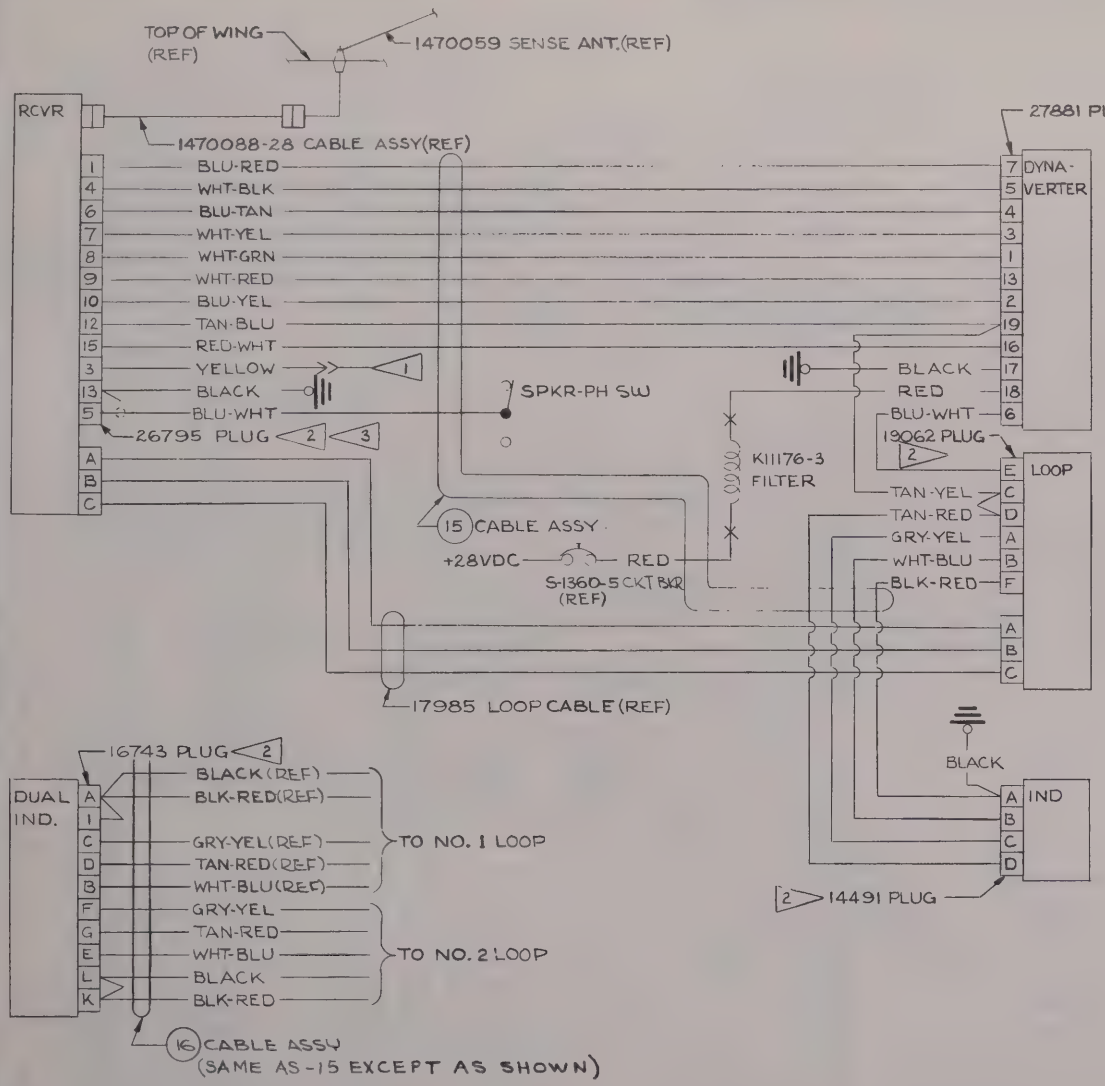


NOTES:

1. LITE DIMMER WIRE CONNECTS TO FLOOD LITE DIMMING RHEO. WITH STD LIGHTING. WHEN OPT. POST LITES ARE INSTALLED CONNECT TO FLIGHT INSTRUMENT & RADIO DIAL LIGHT DIM. RES.
2. PLUGS VENDOR FURNISHED.
3. FOR TSO INSTALLATIONS CONNECT ARC 27859 BETWEEN ARC 26795 PLUG & PIGTAIL ON TUNER.
4. WIRE MATL PER S-1460 UNLESS NOTED.

| ITEM NO | PART NO | DESCRIPTION | INSTALLED ON |
|---|---|---|---|
| | | | |

EQUIPMENT TABLE

| WIRE COLOR OR PART NO | GA | MATERIAL OR NOMENCLATURE 4 | LG | TERMINALS | | -15 NEXT ASSY | -16 | SERIALS |
|---|---|---|---|---|---|---|---|---|
| K11176-3 | | FILTER CHOKE (NARO) | | | | 1 | 1 | |
| 14491 | | PLUG(ARC) | | 2 | | 1 | | |
| 19062 | | | | | | 1 | 1 | |
| 27881 | | | | | | 1 | 1 | |
| 26795 | | | | | | 1 | 1 | |
| 16743 | | PLUG(ARC) | | 2 | | | 1 | |
| | | | | | | | | |
| BLK-RED | 22 | -22-0-2 | | SOLDER | SOLDER | | 1 | |
| WHT-BLU | | -22-9-6 | | | | | 1 | |
| GRY-YEL | | -22-8-4 | | | | | 1 | |
| TAN-RED | | -22-10-2 | | | SOLDER | | 1 | |
| BLACK | | -22-0 | | SOLDER | S-1367-1-8 | 1 | 1 | |
| BLK-RED | | -22-0-2 | | | SOLDER | 1 | 1 | |
| WHT-BLU | | -22-9-6 | | | | 1 | 1 | |
| GRY-YEL | | -22-8-4 | | | | 1 | 1 | |
| TAN-RED | | -22-10-2 | | | | 1 | 1 | |
| TAN-YEL | | -22-10-4 | | | | 1 | 1 | |
| BLU-WHT | 22 | -22-6-9 | | SOLDER | SOLDER | 1 | 1 | |
| RED | 18 | -18-2 | | S-1370-1 | S-1367-1-8 | 1 | 1 | |
| RED | 18 | -18-2 | | SOLDER | S-1370-1 | 1 | 1 | |
| BLACK | 18 | -18-0 | | | S-1367-1-8 | 1 | 1 | |
| BLU-WHT | 22S | S-1461-22-6-9 | | | SOLDER | 1 | 1 | |
| BLACK | 18 | -18-0 | | | S-1367-1-8 | 1 | 1 | |
| YELLOW | 18 | -18-4 | | | S-341-2 | 1 | 1 | |
| RED-WHT | 22 | -22-2-9 | | | SOLDER | 1 | 1 | |
| TAN-BLU | | -22-10-6 | | | | 1 | 1 | |
| BLU-YEL | | -22-6-4 | | | | 1 | 1 | |
| WHT-RED | | -22-9-2 | | | | 1 | 1 | |
| WHT-GRN | | -22-9-5 | | | | 1 | 1 | |
| WHT-YEL | | -22-9-4 | | | | 1 | 1 | |
| BLU-TAN | | -22-6-10 | | | | 1 | 1 | |
| WHT-BLK | | -22-9-0 | | | | 1 | 1 | |
| BLU-RED | 22 | -22-6-2 | | SOLDER | SOLDER | 1 | 1 | |

WIRE TABLE

CESSNA AIRCRAFT CO., COMMERCIAL AIRCRAFT DIVISION, WICHITA KANSAS

| | NAME | DATE |
|---|---|---|
| DRAWN | ACKERSON | 11-16-63 |
| GROUP | Harden | 1-7-64 |
| CHECK | R. Stuck | 1-8-64 |
| PROJ | [illegible] | 1-11-64 |

TITLE: WIRING DIAGRAM — CESSNA ADF 500 (ARC TYPE 318A) (OPTIONAL)

Cessna.

DWG NO 1470000

SUPERSEDED BY | SUPERSEDES PAGES 17.13 & 17.13.1 | MODEL 336 | REV | PAGE 17.13.2

FORM NO. 80-161

| CHG LET | REVISION | BY / DATE | CHK / APPD |
|---|---|---|---|
| | | | |

NOTES:

1. PLUGS ARE VENDOR SUPPLIED.
2. LIGHT DIMMING WIRE CONNECTS TO FLOOD LIGHT DIMMING RHEOSTAT WITH STANDARD LIGHTING. WHEN OPTIONAL POST LIGHTING IS INSTALLED, CONNECT TO FLIGHT INSTRUMENT & RADIO DIAL LIGHT DIMMING RESISTOR.
3. REFER TO PAGE 17.12 FOR OMNITENNA CONNECTIONS WHEN A DUAL OMNI INSTALLATION IS MADE.
4. REFER TO AUDIO & INTERCONNECTING SYSTEM (PG 17.11) FOR XMTR ANT. CONNECTIONS WHEN THIS UNIT IS INSTALLED WITH A SECOND XMTR.
5. OHMITE "LITTLE DEVIL" OR EQUIVALENT.

INACTIVE WHH 12-30-63
SR43GL & ON RRS

| WIRE CODE NO OR PART NO. | GA | MATERIAL OR NOMENCLATURE | LG | TERMINALS | | -1 NO REQ | -2 N/A | -27 | SERIALS |
|---|---|---|---|---|---|---|---|---|---|
| 82Ω 2 WATT | | RESISTOR | | 5 | | | | 1 | |
| 28481 | | TERMINAL (ARC) | | | | | | 1 | |
| MS25237-328 | | LAMP | | | | | | 3 | |
| MS25041-10 | | LAMPASSY | | | | | | 1 | |
| MS25041-4 | | LAMPASSY | | | | | | 1 | |
| MS25041-1 | | LAMPASSY | | | | | | 1 | |
| 28371-0005 | | PLUG (ARC) | | 1 | | | | 1 | |
| 27826 | | PLUG | | | | 1 | 1 | | |
| 27825 | | PLUG | | | | 1 | 1 | | |
| 27827 | | PLUG (ARC) | | 1 | | 2 | 2 | | |
| | | | | | | | | | |
| G-RF 58 | 22 | | | SOLDER | SOLDER | | | 1 | |
| 57 | 22 | | | | | | | 1 | |
| 56 | 22 | | | | | | | 1 | |
| 55 | 22 | | | | | | | 1 | |
| 54 | 22 | | | | | | | 1 | |
| 53 | 22 | | | | | | | 1 | |
| 52 | 22 | | | | | | | 1 | |
| G-RF 51 | 22 | | | SOLDER | SOLDER | | | 1 | |
| | | | | | | | | | |
| G-RD 110 | 22S | | | SOLDER | SOLDER | 1 | 1 | | |
| 109 | 22S | | | | | 1 | 1 | | |
| 108 | 22 | | | | | 1 | 1 | | |
| 107 | 22S | | | | | 1 | | | |
| 106 | 22 | | | | | 1 | 1 | | |
| 105 | 22 | | | | | 1 | 1 | | |
| 104 | 22 | | | | | 1 | 1 | | |
| 103 | 22 | | | | | 1 | 1 | | |
| 102 | 22 | | | | | 1 | 1 | | |
| G-RD 101 | 22S | | | SOLDER | SOLDER | 1 | 1 | | |

| WIRE CODE NO OR PART NO. | GA | MATERIAL OR NOMENCLATURE | LG | TERMINALS | | -1 NO REQ | -2 N/A | -27 | SERIALS |
|---|---|---|---|---|---|---|---|---|---|
| G-RD 100 | 22 | | | SOLDER | SOLDER | 1 | 1 | | |
| 99 | 22S | | | | | 1 | | | |
| 98 | 22 | | | | | 1 | | | |
| 97 | 22 | | | | | 1 | 1 | | |
| 96 | 22 | | | | SOLDER | 1 | 1 | | |
| 95 | 18 | | | | S-1367-1-8 | 1 | 1 | | |
| 94 | 22 | | | | SOLDER | 1 | 1 | | |
| 93 | 22 | | | | SOLDER | 1 | 1 | | |
| 92 | 18 | | | | SOLDER | 1 | 1 | | |
| 91 | 22 | | | | S-341-2 | 1 | 1 | | |
| 90 | 18 | | | | S-1367-1-6 | 1 | 1 | | |
| 89 | 22 | | | | SOLDER | 1 | 1 | | |
| 88 | 22 | | | | | 1 | 1 | | |
| 87 | 22S | | | | | 1 | 1 | | |
| 86 | 22S | | | | | 1 | 1 | | |
| 85 | 22 | | | | | 1 | 1 | | |
| 84 | 22 | | | | | 1 | 1 | | |
| 83 | 22 | | | | | 1 | 1 | | |
| 82 | 22 | | | | | 1 | 1 | | |
| 81 | 22 | | | | SOLDER | 1 | 1 | | |
| 80 | | OMITTED | | | | | | | |
| 79 | 22 | | | | S-341-2 | | 1 | | |
| 78 | 22 | | | | S-341-2 | | 1 | | |
| 77 | 22S | | | | SOLDER | | 1 | | |
| 76 | 22 | | | | S-341-2 | | 1 | | |
| G-RD 75 | 22S | | | SOLDER | S 341-2 | | 1 | | |

WIRE TABLE

| ITEM NO | PART NO. | DESCRIPTION | INSTALLED ON |
|---|---|---|---|
| | | | |

EQUIPMENT TABLE

CESSNA AIRCRAFT CO., COMMERCIAL AIRCRAFT DIVISION, WICHITA, KANSAS

| | NAME | DATE |
|---|---|---|
| DRAWN | ZONGKER | 5-10-63 |
| GROUP | Warden | 9-13-63 |
| CHECK | R. Stuck | 9-13-63 |
| PROJ | [illegible] | 7-8-63 |
| | RHO [illegible] | |

TITLE: WIRING DIAGRAM — CESSNA NAV/COMM 500 (ARC TYPE 317A) (OPTIONAL)

Cessna.

DWG NO. 1470000

SUPERSEDED BY: PG 17.14.2 | SUPERSEDES: | MODEL: 336 | REV: | PAGE: 17.14

FORM NO. 80-161

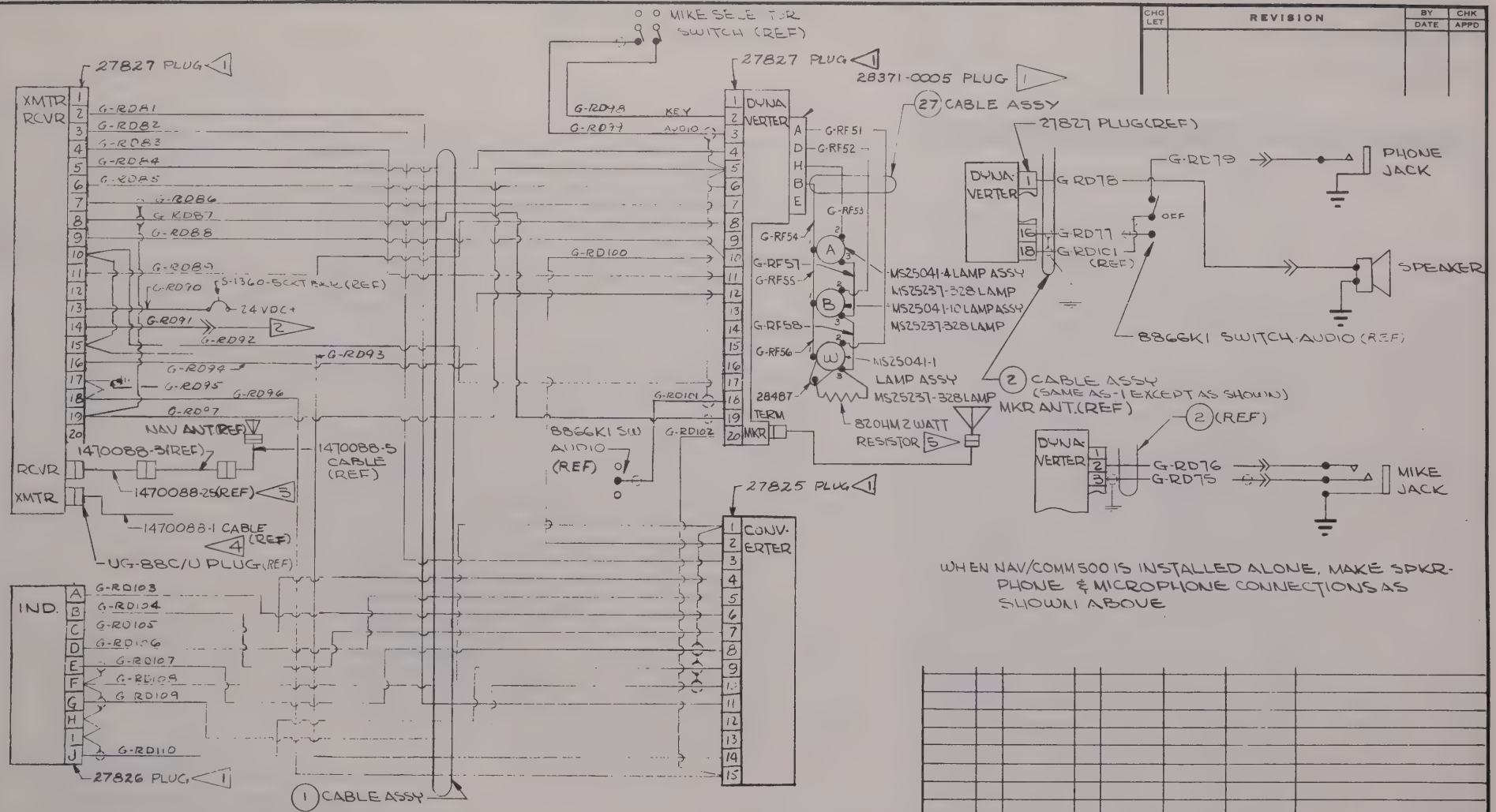


WHEN NAV/COMM 500 IS INSTALLED ALONE, MAKE SPKR-PHONE & MICROPHONE CONNECTIONS AS SHOWN ABOVE

INACTIVE WHH 12-30-63
SR 4362 & ON KBS

| CHG LET | REVISION | BY DATE | CHK APPD |
|---|---|---|---|

| WIRE CODE NO. | GA | MATERIAL | LG | TERMINALS | | SERIALS |
|---|---|---|---|---|---|---|
| | | | | | | |

WIRE TABLE

| ITEM NO | PART NO | DESCRIPTION | INSTALLED ON |
|---|---|---|---|
| | | | |

EQUIPMENT TABLE

CESSNA AIRCRAFT CO. COMMERCIAL AIRCRAFT DIVISION, WICHITA, KANSAS

| | NAME | DATE |
|---|---|---|
| DRAWN | HICKERSON | 5-10-63 |
| GROUP | Hardin | 5-13-63 |
| CHECK | R. Stuck | 7-13-63 |
| PROJ | | 7-11-63 |
| | Howard | |

TITLE: WIRING DIAGRAM — CESSNA NAV/COMM 500 (ARC TYPE 317A) (OPTIONAL)

Cessna.

DWG NO. 1470000

| SUPERSEDED BY | SUPERSEDES | MODEL | REV. | PAGE |
|---|---|---|---|---|
| PG 17.14.3 | | 336 | | 17.14.1 |

(SR4362)

| CHG LET | REVISION | BY DATE | CHK APPD |
|---|---|---|---|
| | | | |

NOTES.

1. PLUGS ARE VENDOR SUPPLIED.
2. LIGHT DIMMING WIRE CONNECTS TO FLOOD LIGHT DIMMING RHEOSTAT WITH STANDARD LIGHTING. WHEN OPTIONAL POST LIGHTING IS INSTALLED, CONNECT TO FLIGHT INSTRUMENT & RADIO DIAL LIGHT DIMMING RESISTOR.
3. REFER TO PAGE 17.12.3 FOR OMNITENNA CONNECTIONS WHEN A DUAL OMNI INSTALLATION IS MADE
4. REFER TO AUDIO & INTERCONNECTING SYSTEMS (PAGE 17.11.1) FOR XMTR ANTENNA CONNECTIONS WHEN THIS UNIT IS INSTALLED WITH A SECOND XMTR.
5. OHMITE "LITTLE DEVIL" OR EQUIVALENT
6. WIRE MATL PER S-1400 UNLESS OTHERWISE NOTED.

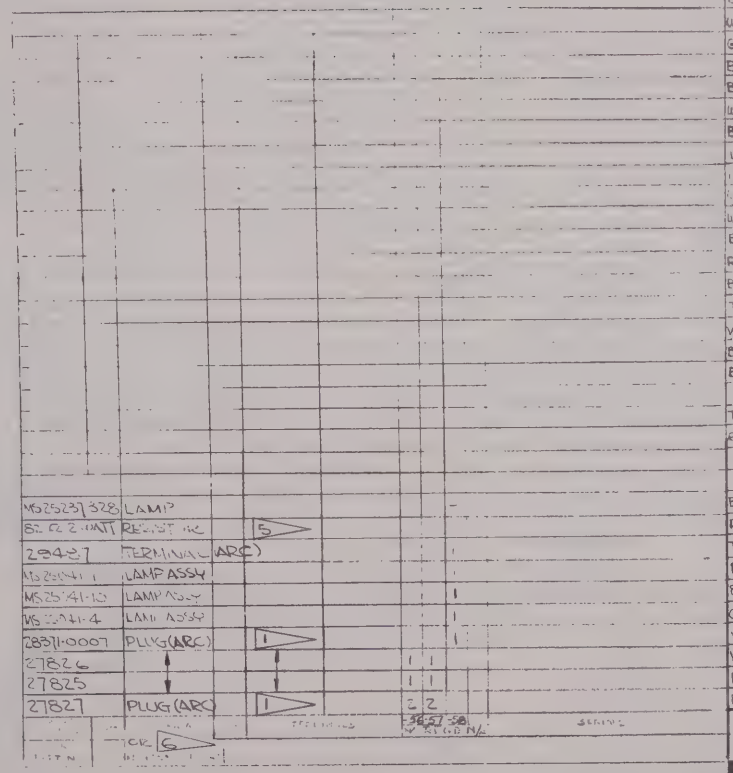


| WIRE CODE NO. | GA | MATERIAL | LG | TERMINALS | | SERIALS |
|---|---|---|---|---|---|---|
| BLU/WHT | 22S | S1461-22-6-2 | | SOLDER | SOLDER | |
| BLUE | 22 | -22-6 | | SOLDER | S-341-2 | |
| GREEN | 20 | -20-5 | | | S-341-2 | |
| WHT/TAN | 22 | 22-9-10 | | | SOLDER | 2 |
| BLU/GRN | 22S | S1461-22-6-5 | | | | |
| BLU/BLK | 22S | S1461-22-6-0 | | | | |
| BLK/YEL | 22 | -22-0-4 | | | | |
| BLU/WHT | 22S | S1461-22-6-3 | | | | |
| WHT/TAN | 22 | -22-9-10 | | | | |
| BLU/WHT | 22 | -22-6-3 | | | | |
| WHT/RED | 22 | -22-9-2 | | | | |
| GRY/BLU | 22 | -22-8-6 | | | SOLDER | |
| BLU/YEL | 22S | S1461-22-6-4 | | | S-341-2 S1367-1-8 | |
| BLK/BLU | 22 | -22-0-6 | | | S1367-1-8 | |
| WHT/RED | 22 | -22-9-2 | | | SOLDER | |
| BLK/YEL | 22 | -22-0-4 | | | | 2 |
| WHT/TAN | 22 | -22-9-10 | | | | |
| WHT/BLU | 22 | -22-9-6 | | | | |
| WHT/GRN | 22 | -22-9-5 | | | | |
| WHT/YEL | 22 | -22-9-4 | | | | |
| BLACK | 18 | -18-0 | | | SOLDER | |
| RED/WHT | 18 | -18-2-9 | | | S1367-1-6 | |
| BLU/WHT | 22S | S1461-22-6-3 | | | SOLDER | |
| TAN | 22S | S1461-22-10 | | | S-341-2 | |
| WHT/BLK | 22 | -22-9-0 | | | S-341-2 | |
| BLK/BLU | 22 | -22-0-6 | | | SOLDER | |
| BLK/RED | 22 | -22-0-2 | | | SOLDER | |
| BLK | 18 | -18-0 | | | S-1367-1-8 | |
| TAN/WHT | 22 | -22-10-9 | | | SOLDER | |
| RED/BLK | 18 | -18-2-0 | | | SOLDER | |
| YEL | 18 | -18-4 | | | S-341-2 | |
| RED | 18 | -18-2 | | | S1367-1-6 | |
| BLU/GRN | 22 | -22-6-5 | | | SOLDER | |
| RED/BLU | 18 | -18-2-6 | | | SOLDER | |
| TAN/BLU | 22 | -22-10-6 | | | SOLDER | |
| BLU/YEL | 22S | S1461-22-6-4 | | | S-341-2 | |
| BLU/GRN | 22S | S1461-22-6-5 | | | SOLDER | |
| GRY/BLU | 22 | -22-8-6 | | | | |
| WHT/BLU | 22 | -22-9-6 | | | | |
| WHT/YEL | 22 | -22-9-4 | | | | |
| BLU/YEL | 22 | -22-6-4 | | | | |
| BLU/BLK | 22 | -22-6-0 | | SOLDER | SOLDER | |

WIRE TABLE

| ITEM NO. | PART NO | DESCRIPTION | INSTALLED ON |
|---|---|---|---|

EQUIPMENT TABLE

CESSNA AIRCRAFT CO., COMMERCIAL AIRCRAFT DIVISION, WICHITA, KANSAS

| | NAME | DATE |
|---|---|---|
| DRAWN | C. Brown | 11-29-63 |
| GROUP | [illegible] | 12-30-63 |
| CHECK | K. Stuck | 1-3-64 |
| PROJ | [illegible] | 1-8-64 |

TITLE: WIRING DIAGRAM — CESSNA NAV/COMM 500 (ARC TYPE 317A) (OPTIONAL)

Cessna.

DWG NO. 1470000

| SUPERSEDED BY | SUPERSEDES | MODEL: | REV | PAGE: |
|---|---|---|---|---|
| | PAGE 17.14 | 336 | | 17.14.2 |

FORM NO. 80-161

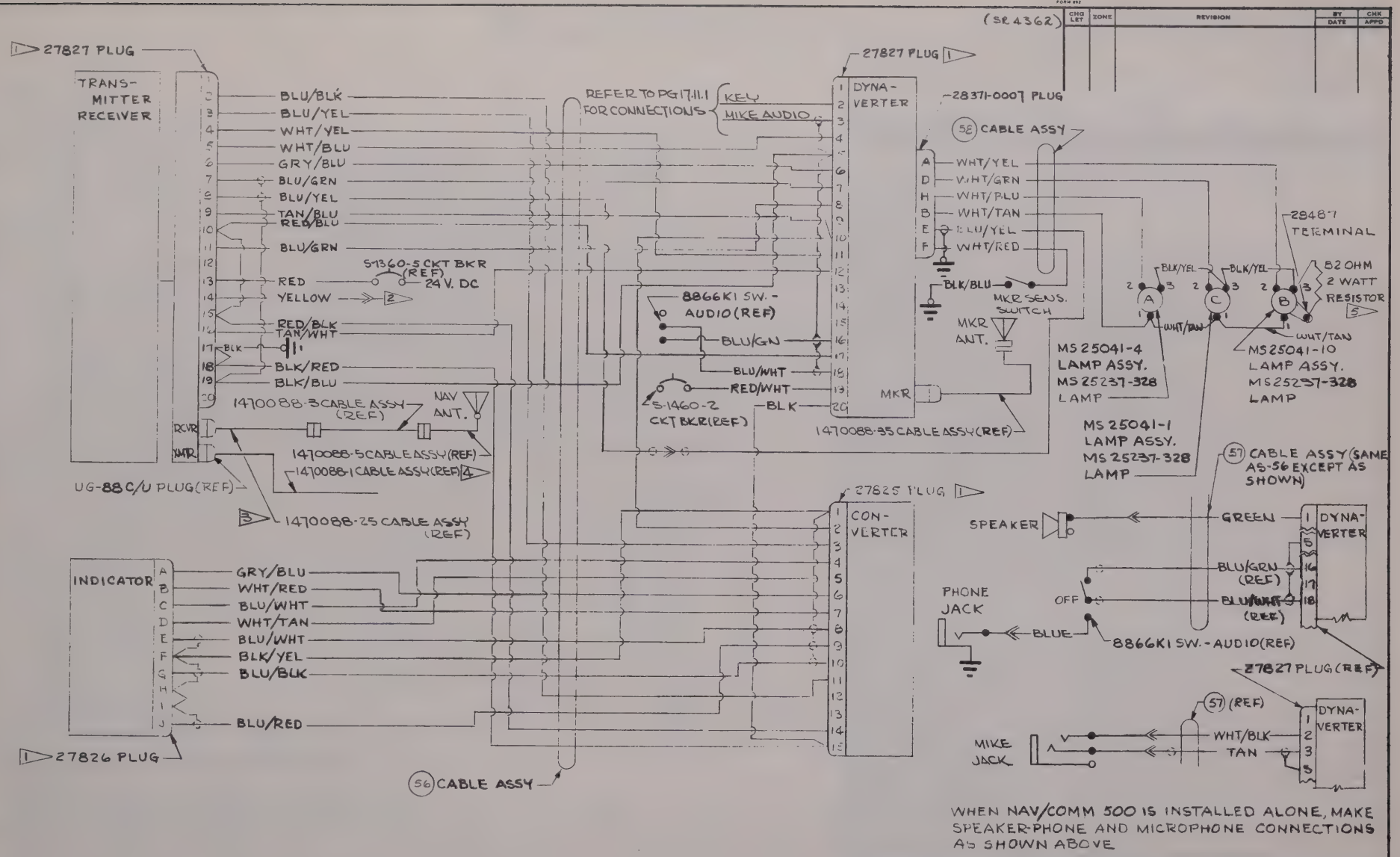
(SR 4362)
CHG LET
ZONE
REVISION
BY DATE
CHK APPD
27827 PLUG
TRANS-MITTER RECEIVER
BLU/BLK
BLU/YEL
WHT/YEL
WHT/BLU
GRY/BLU
BLU/GRN
BLU/YEL
TAN/BLU
RED/BLU
BLU/GRN
RED
YELLOW
RED/BLK
TAN/WHT
BLK
BLK/RED
BLK/BLU
5-1360-5 CKT BKR (REF)
24 V. DC
14700088-3 CABLE ASSY (REF)
NAV ANT.
RCVR
XMTR
14700088-5 CABLE ASSY (REF)
14700088-1 CABLE ASSY (REF)
UG-88 C/U PLUG (REF)
14700088-25 CABLE ASSY (REF)
INDICATOR
GRY/BLU
WHT/RED
BLU/WHT
WHT/TAN
BLU/WHT
BLK/YEL
BLU/BLK
BLU/RED
27826 PLUG
56 CABLE ASSY
REFER TO PG 17.11.1 FOR CONNECTIONS
KEY
MIKE AUDIO
27827 PLUG
DYNA-VERTER
8866K1 SW. - AUDIO (REF)
BLU/GRN
BLU/WHT
RED/WHT
BLK
5-1460-2 CKT BKR (REF)
MKR
14700088-35 CABLE ASSY (REF)
28371-0007 PLUG
52 CABLE ASSY
WHT/YEL
WHT/GRN
WHT/BLU
WHT/TAN
BLU/YEL
WHT/RED
BLK/BLU
MKR SENS. SWITCH
MKR ANT.
BLK/YEL
BLK/YEL
28487 TERMINAL
82 OHM 2 WATT RESISTOR
5
WHT/TAN
WHT/TAN
MS 25041-4 LAMP ASSY. MS 25237-328 LAMP
MS 25041-10 LAMP ASSY. MS 25237-328 LAMP
MS 25041-1 LAMP ASSY. MS 25237-328 LAMP
57 CABLE ASSY (SAME AS 56 EXCEPT AS SHOWN)
27825 PLUG
CON-VERTER
SPEAKER
GREEN
DYNA-VERTER
BLU/GRN (REF)
BLU/WHT (REF)
PHONE JACK
OFF
BLUE
8866K1 SW. - AUDIO (REF)
27827 PLUG (REF)
57 (REF)
MIKE JACK
WHT/BLK
TAN
WHEN NAV/COMM 500 IS INSTALLED ALONE, MAKE SPEAKER-PHONE AND MICROPHONE CONNECTIONS AS SHOWN ABOVE
CESSNA AIRCRAFT CO. COMMERCIAL AIRCRAFT DIVISION WICHITA, KANSAS
NAME
DATE
DRAWN OSBURN 11-28-63
GROUP 11-30-63
CHECK R. Stark 1-8-64
STRESS 1-9-64
PROJ 1-11-64
SUPERSEDED BY
TITLE.
WIRING DIAGRAM — CESSNA NAV/COMM 500 (ARC TYPE 317A) (OPTIONAL)
Cessna.
DWG NO. 1470000
REV:
PAGE 17.14.3
SUPERSEDES 17.14.1
MODEL 336

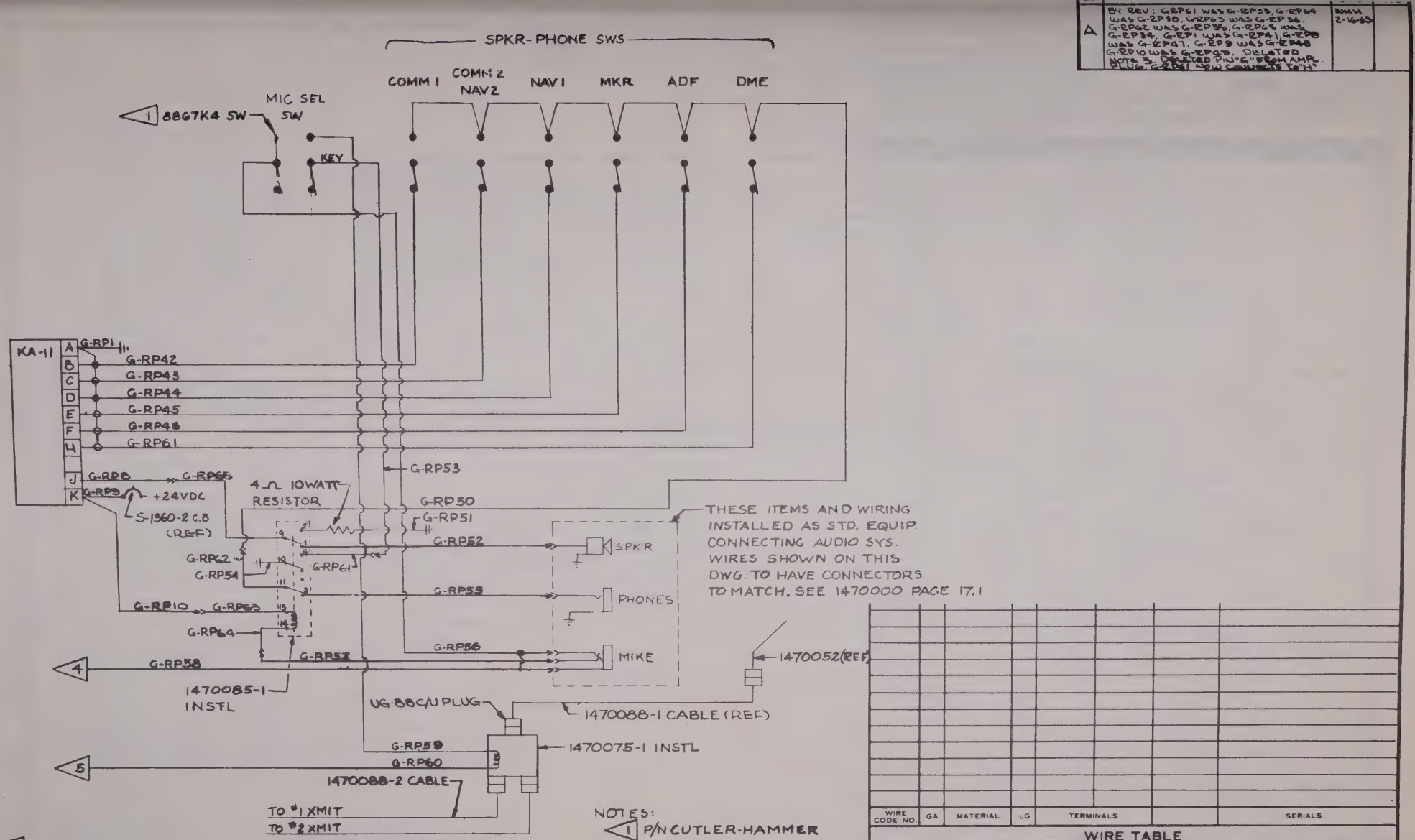


THESE ITEMS AND WIRING INSTALLED AS STD. EQUIP. CONNECTING AUDIO SYS. WIRES SHOWN ON THIS DWG. TO HAVE CONNECTORS TO MATCH. SEE 1470000 PAGE 17.1

NOTES:

1. P/N CUTLER-HAMMER
2. ALL WIRE 22 GA. UNLESS NOTED

4 CONNECT TO PIN C OF NO.1 KS-502 PWR SPLY WHEN MAKING A DUAL INSTALLATION.

5 CONNECT TO PIN E OF NO.2 KS-502 PWR SPLY WHEN MAKING A DUAL INSTALLATION.

| ITEM NO. | PART NO. | DESCRIPTION | INSTALLED ON |
|---|---|---|---|

EQUIPMENT TABLE

| WIRE CODE NO. | GA | MATERIAL | LG | TERMINALS | | SERIALS |
|---|---|---|---|---|---|---|
| | | | | | | |

WIRE TABLE

| REV | DESCRIPTION | DWN |
|---|---|---|
| A | BH REV: G-RP61 WAS G-RP53, G-RP64 WAS G-RP10, G-RP53 WAS G-RP56, G-RP62 WAS G-RP50, G-RP65 WAS G-RP54, G-RP1 WAS G-RP41, G-RP5 WAS G-RP47, G-RP9 WAS G-RP48 G-RP10 WAS G-RP49. DELETED NOTE 3. DELETED PIN "G" FROM AMPL PLUG. G-RP61 NOW CONNECTS TO H. | 2-1663 |

CESSNA AIRCRAFT CO. COMMERCIAL AIRCRAFT DIV. WICHITA KANSAS

| | NAME | DATE |
|---|---|---|
| DRAWN | ACKERSON | 5-1-62 |
| GROUP | Hayden | 8-7-62 |
| CHECK | R L Clark | 8-10-62 |
| PROJ | | 8-17-62 |

TITLE: WIRING DIAGRAM — KING AUDIO SYSTEM (OPTIONAL)

Cessna.

DWG NO: 1470000

SUPERSEDED BY | SUPERSEDES | MODEL: 336 | REV: A | PAGE: 17.15

FORM NO. 80-161

| CHG LET | REVISION | BY / DATE | CHK / APPD |
|---|---|---|---|
| A | DELETED NOTES 4, 7, ADDED 22-23-24 CABLE ASSYS & C/M. ADDED SHEET 17.16.1 TITLE KING KY-95, KX120, KX130 (OPTIONAL) WAS KING RADIO COMM/VOR-ILS (OPTIONAL) | DZ 5-20-65 | RAS |

| WIRE CODE NO. OR PART NO. | GA | MATERIALS OR NOMENCLATURE | LG | TERMINALS | -22 | -23 | -24 NO. REQ | N/A | SERIALS |
|---|---|---|---|---|---|---|---|---|---|
| 030-2038-00 | | PLUG (KG) | | 5 | | | | N/R | |
| 030-2017-00 | | PLUG (KG) | | | | | | N/R | |
| 030-2013-00 | | PLUG (KG) | | | | | | 1 | |
| 030-2000-00 | | PLUG (KG) | | | 1 | 1 | | | |
| 030-2002-00 | | PLUG (KG) | | 5 | 1 | 1 | | | |

| WIRE CODE NO. OR PART NO. | GA | MATERIAL OR NOMENCLATURE | LG | TERMINALS | -22 | -23 | -24 NO. REQ | N/A | SERIALS |
|---|---|---|---|---|---|---|---|---|---|
| G-RD196 | 22 | | | SOLDER | S-341-2 | | 1 | | |
| 195 | 22 | | | | S-341-2 | | 1 | | |
| 194 | 22 | | | | SOLDER | | 1 | | |
| 193 | 22 | | | | S-341-2 | | 1 | | |
| 192 | 22S | | | | S-341-2 | | 1 | | |
| 191 | 22 | | | | S-1367-1-8 | 1 | 1 | | |
| 190 | 22 | | | | SOLDER | | | 1 | |
| 189 | 22 | | | | | | | 1 | |
| 188 | 22 | | | | | | | 1 | |
| 187 | 22 | | | | SOLDER | | | 1 | |
| 186 | 22 | | | | S-341-2 | 1 | 1 | | |
| 185 | 22S | | | | SOLDER | 1 | | | |
| 184 | 22S | | | SOLDER | SOLDER | 1 | 1 | | |
| 183 | | OMITTED | | | | | | | |
| 182 | 22 | | | SOLDER | SOLDER | 1 | | | |
| 181 | 20 | | | | | 1 | 1 | | |
| 180 | 20 | | | | | 1 | 1 | | |
| 179 | 22 | | | | | 1 | 1 | | |
| 178 | 22S | | | | | 1 | 1 | | |
| 177 | 22 | | | | SOLDER | 1 | 1 | | |
| 176 | 22 | | | | S-1370-1 | 1 | 1 | | |
| 175 | 22 | | | | SOLDER | 1 | 1 | | |
| 174 | 22 | | | | SOLDER | 1 | 1 | | |
| 173 | 22 | | | | SOLDER | 1 | 1 | | |
| 172 | 18 | | | | S-1367-1-6 | 1 | 1 | | |
| G-RD171 | 22 | | | SOLDER | SOLDER | 1 | 1 | | |

WIRE TABLE

| ITEM NO. | PART NO. | DESCRIPTION | INSTALLED ON |
|---|---|---|---|
| | | EQUIPMENT TABLE | |

CESSNA AIRCRAFT CO COMMERCIAL AIRCRAFT DIVISION WICHITA KANSAS

| | NAME | DATE |
|---|---|---|
| DRAWN | ACKERSON | 5-10-62 |
| GROUP | HARDEN | 8-7-62 |
| CHECK | CLARK | 8-10-62 |
| PROJ | AHRENS | 8-13-62 |

TITLE: WIRING DIAGRAM — KING KY-95, KX-120 KX-130 (OPTIONAL)

Cessna.

DWG NO. 1470000

SUPERSEDED BY | SUPERSEDES | MODEL: 336 | REV: A | PAGE: 17.16

FORM NO. 80-161

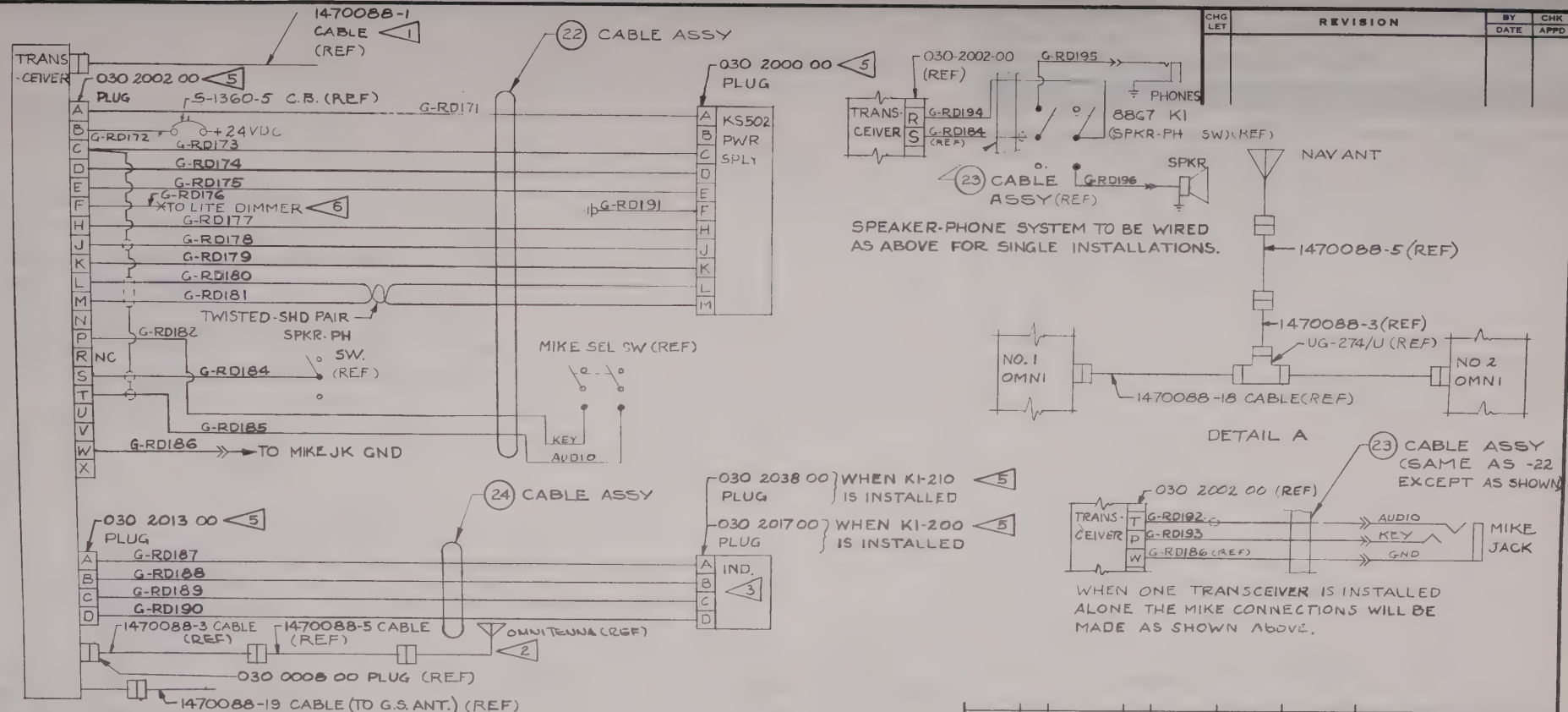


| CHG LET | REVISION | BY / DATE | CHK / APPD |
|---|---|---|---|
| | | | |

NOTES:

1. SEE AUDIO SYSTEM WIRING FOR ANT. LEADIN IF DUAL INSTALLATION IS REQD.
2. SEE DETAIL A FOR DUAL OMNI ANT. LEAD-IN CABLES
3. WHEN THE GLIDE SLOPE RCVR IS INSTALLED A KI-210 INDICATOR IS USED AND WIRED AS SHOWN. WHEN THE OMNI RCVR IS INSTALLED WITHOUT THE GLIDESLOPE RCVR A KI-200 INDICATOR IS USED & WIRED AS SHOWN EXCEPT OMIT WIRE G-RD190
5. PLUGS VENDOR FURNISHED
6. LITE DIM. WIRE CONNECTS TO FLOOD LIGHT DIM. RHEO. WITH STD LIGHTING. WHEN OPTIONAL POST LIGHTING IS INSTALLED CONNECT TO FLIGHT INST & RADIO DIAL LIGHT DIMMING RESISTOR.

| ITEM NO | PART NO. | DESCRIPTION | INSTALLED ON |
|---|---|---|---|

EQUIPMENT TABLE

| WIRE CODE NO. | GA | MATERIAL | LG | TERMINALS | | SERIALS |
|---|---|---|---|---|---|---|
| | | | | | | |

WIRE TABLE

CESSNA AIRCRAFT CO. COMMERCIAL AIRCRAFT DIVISION, WICHITA KANSAS

| | NAME | DATE |
|---|---|---|
| DRAWN | Ackerson | 5-10-62 |
| GROUP | Hayden | 8-7-62 |
| CHECK | E.V. Clark | 8-10-62 |
| PROJ | | 8-13-62 |

TITLE: WIRING DIAGRAM — KING KY-95, KX-120, KX-130 (OPTIONAL)

Cessna.

DWG NO: 1470000

| SUPERSEDED BY | SUPERSEDES | MODEL: 336 | REV. A | PAGE: 17.16.1 |
|---|---|---|---|---|

FORM NO. 80-161

| CHG LET | REVISION | BY DATE | CHK APPD |
|---|---|---|---|
| | | | |

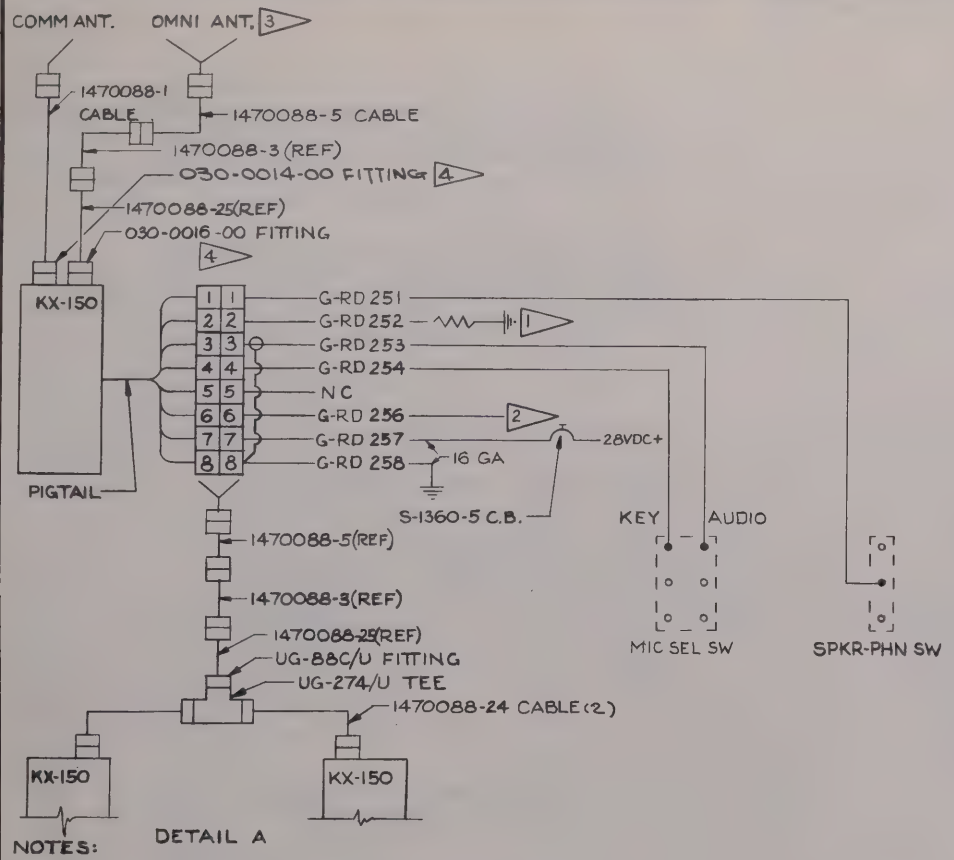


DETAIL A

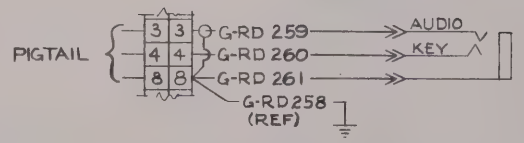


WHEN A SINGLE INSTALLATION IS MADE THE MIKE WIRING WILL BE MADE AS SHOWN ABOVE

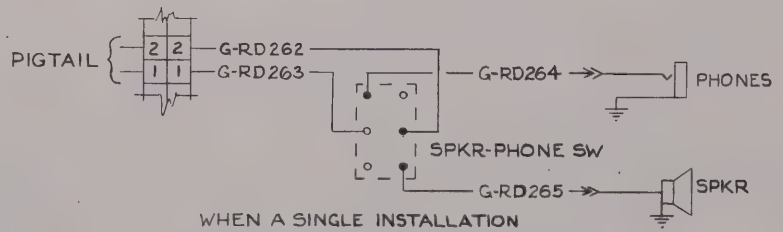


WHEN A SINGLE INSTALLATION IS MADE THE SPEAKER-PHONE WIRING WILL BE MADE AS SHOWN ABOVE

NOTES:

1. 4 Ω, 5 WATT RESISTOR. OHMITE "LITTLE DEVIL" OR EQUIV.
2. LITE DIM. WIRE CONNECTS TO FLOOD LIGHT DIM. RHEO. WITH STD LIGHTING. WHEN OPTIONAL POST LIGHTING IS INSTALLED CONNECT TO FLIGHT INST & RADIO DIAL LIGHT DIMMING RESISTOR.
3. SEE DETAIL A FOR DUAL OMNI ANT. LEADS.
4. PLUG VENDOR FURNISHED.
5. ALL WIRE 22 GA UNLESS NOTED.

| WIRE CODE NO. | GA | MATERIAL | LG | TERMINALS | | SERIALS |
|---|---|---|---|---|---|---|
| | | | | | | |

WIRE TABLE

| ITEM NO. | PART NO. | DESCRIPTION | INSTALLED ON |
|---|---|---|---|
| | | EQUIPMENT TABLE | |

CESSNA AIRCRAFT CO. COMMERCIAL AIRCRAFT DIVISION WICHITA KANSAS

| | NAME | DATE |
|---|---|---|
| DRAWN | Ackerson | 10-3-62 |
| GROUP | Jurgens | 10-26-62 |
| CHECK | R. Stuck | 10-29-62 |
| PROJ | | 11-16-62 |

TITLE: WIRING DIAGRAM — KING KX-150 COMM-NAV (OPTIONAL)

Cessna.

DWG NO: 1470000

SUPERSEDED BY | SUPERSEDES | MODEL: 336 | REV: | PAGE: 17-17

| CHG LET | REVISION | BY / DATE | CHK / APPD |
|---|---|---|---|
| A | CHANGED TITLE TO INCLUDE T-5-RA | WDA 8-23-63 | RRS WHN |

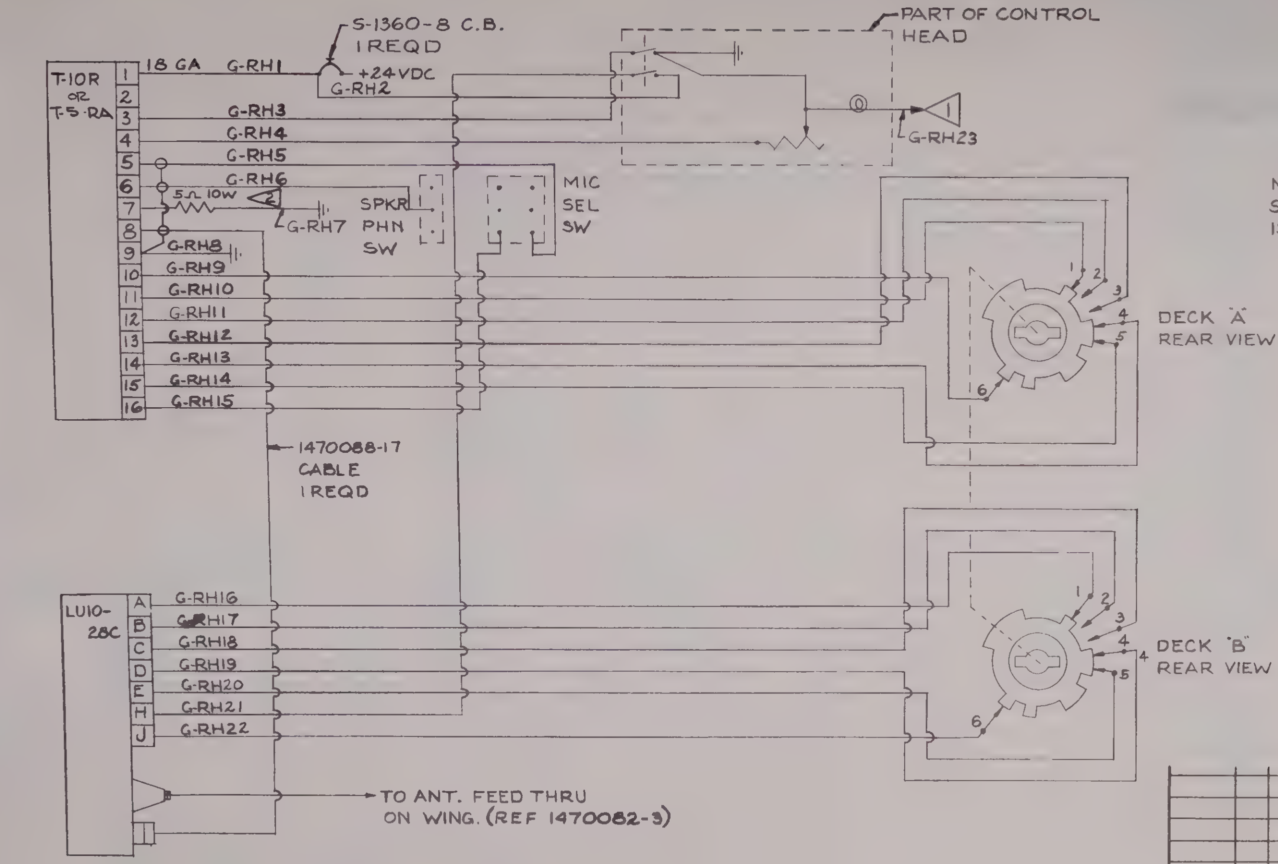


MIKE JACK TO BE WIRED AS SHOWN ABOVE WHEN THE T-10R IS INSTALLED ALONE.

NOTES:

1. LITE DIM. WIRE CONNECTS TO FLOOD LITE DIM. RHEO. WITH STD LIGHTING. WHEN OPTIONAL POST LIGHTING IS INSTALLED CONNECT TO FLIGHT INST & RADIO DIAL LIGHT DIMMING RESISTOR.
2. OHMITE "BROWN DEVIL" OR EQUIV. THIS RESISTOR TO BE OMITTED AND WIRE G-RH7 TO BE RUN DIRECT TO THE SPEAKER WHEN THIS INSTALLATION IS MADE ALONE.
3. ⊖ DENOTES SHIELDED WIRE
4. ALL WIRE 22 GA. UNLESS NOTED OTHERWISE.

| ITEM NO | PART NO. | DESCRIPTION | INSTALLED ON |
|---|---|---|---|

EQUIPMENT TABLE

| WIRE CODE NO. | GA | MATERIAL | LG | TERMINALS | SERIALS |
|---|---|---|---|---|---|

WIRE TABLE

CESSNA AIRCRAFT CO. COMMERCIAL AIRCRAFT DIVISION WICHITA KANSAS

| | NAME | DATE |
|---|---|---|
| DRAWN | ACKERSON | 7-18-62 |
| GROUP | Varden | 8-7-62 |
| CHECK | E.R. Clark | 8-10-62 |
| PROJ | [illegible] | 8-13-62 |

TITLE: WIRING DIAGRAM — SUNAIR T-10R & T-5-RA H. F. (OPTIONAL)

Cessna.

DWG NO: 1470000

SUPERSEDED BY | SUPERSEDES | MODEL: | REV: A | PAGE: 17.18

G-RH23

FORM NO. 80-161

| CHG LET | REVISION | BY / DATE | CHK / APPD |
|---|---|---|---|
| | | | |

NOTES.

1. G-RD280 CONNECTS TO FLOOD LIGHT DIMMER RHEOSTAT WITH STD LIGHTING. WHEN OPT POST LIGHTING IS INSTALLED CONNECT TO FLIGHT INSTRUMENT & RADIO DIAL DIMMING RESISTOR.
2. SUPPLIED IN KIT EL-2053 (NARO).
3. WHEN UGR-1A GLIDE SLOPE IS INSTALLED WITH VOA-5 & -31 CABLE (REF PG 17.4.2) -26 CABLE IS OMITTED & -38 CABLE ASSY IS INSTALLED IN MK 12 PANEL UNIT (REF PAGE 17.19.2.)
4. OHMITE "BROWN DEVIL" OR EQUIV.
5. SUPPLIED WITH MK 12 INSTL KIT.
6. SEE AUDIO SYSTEM WIRING (PAGE 17.9) FOR COMM ANT. CONNECTIONS WHEN DUAL INSTALLATION IS MADE.
7. SUPPLIED IN KIT EL2052 (NARO)
8. WHEN VOA-6 CONVERTER REPLACES VOA-4 OR VOA-5, -26 CABLE IS OMITTED & PIGTAIL CONNECTS DIRECTLY TO VOA-6.
9. SUPPLIED WITH VOA-4 OR VOA-5 INDICATOR.

| WIRE CODE NO. OR PART NO. | GA | MATERIAL OR NOMENCLATURE | LG | TERMINALS | | -25 -26 -38 NO REQ N/A | SERIALS |
|---|---|---|---|---|---|---|---|
| 41182-2 | | CAP | | 7 | | 2 | |
| MS 3057-12 | | CLAMP | | 9 | | 1 | |
| 41116-1 | | PLUG | | 5 | | 1 | |
| 41247-101 | | PLUG | | 2 | | 1 | |
| 41271-1 | | PLUG | | 7 | | 2 | |
| MS 3106A-20-27S | | PLUG | | 9 | | 1 | |
| 30~10WATT | | RESISTOR | | 4 | | N/R | |
| 5~10WATT | | RESISTOR | | 4 | | N/R | |
| WHITE | 22 | 2 | | SOLDER | SOLDER | 1 | |
| WHITE | 22 | | | | | 1 | |
| GRAY | 22 | | | | | 1 | |
| VIOLET | 22 | | | | | 1 | |
| WHT/BLU | 22 | | | | | 1 | |
| BLUE | 22 | | | | | 1 | |
| WHT/GRN | 22 | | | | | 1 | |
| GREEN | 22 | | | | | 1 | |
| YELLOW | 22 | | | | | 1 | |
| ORANGE | 22 | | | | | 1 | |
| WHT/RED | 22 | | | | | 1 | |
| RED | 22 | | | | | 1 | |
| BROWN | 22 | | | | | 1 | |
| BLACK | 22 | 2 | | SOLDER | SOLDER | 1 | |

| WIRE CODE NO. OR PART NO | GA | MATERIAL OR NOMENCLATURE | LG | TERMINALS | | -25 -26 -38 NO. REQ N/A | SERIALS |
|---|---|---|---|---|---|---|---|
| G-RD299 | 18 | | | SOLDER | S-13671-8 | | |
| 298 | 20 | | | SOLDER | SOLDER | | |
| 297 | 22 | | | SOLDER | S-341-2 | | |
| 296 | 22 | | | SOLDER | S-341-2 | | |
| 295 | 20 | | | S-1370-1 | S-1367-1-8 | 1 | |
| 294 | 22 | | | SOLDER | SOLDER | 1 | |
| 293 | 22 | | | | | 1 | |
| 292 | 18 | | | | | 1 | |
| 291 | 22 | | | | SOLDER | 1 | |
| 290 | | OMITTED | | | | | |
| 289 | | OMITTED | | | | | |
| 288 | 20 | | | | S-1370-1 | 1 | |
| 287 | 22 | | | | SOLDER | 1 | |
| 286 | 22 | | | | | 1 | |
| 285 | 22S | | | | | 1 | |
| 284 | 22 | | | | | 1 | |
| 283 | 22 | | | | | 1 | |
| 282 | 22S | | | | | 1 | |
| 281 | 22 | | | | SOLDER | 1 | |
| 280 | 22 | | | | S-341-2 | 1 | |
| 279 | 20 | | | | S-1370-1 | | |
| 278 | 18 | | | | SOLDER | 1 | |
| 277 | 22 | | | | | 1 | |
| 276 | 22 | | | | | 1 | |
| 275 | 22 | | | | SOLDER | 1 | |
| 274 | 18 | | | | S-1367-1-6 | 1 | |
| 273 | 22 | | | | S-341-2 | 1 | |
| 272 | 22S | | | | SOLDER | 1 | |
| G-RD271 | 16 | | | SOLDER | SOLDER | 1 | |

WIRE TABLE

| ITEM NO | PART NO. | DESCRIPTION | INSTALLED ON |
|---|---|---|---|
| | | | |

EQUIPMENT TABLE

CESSNA AIRCRAFT CO. COMMERCIAL AIRCRAFT DIVISION WICHITA KANSAS

| | NAME | DATE |
|---|---|---|
| DRAWN | ZONGKER | 8-19-63 |
| GROUP | Harden | 9-5-63 |
| CHECK | R. Stuck | 9-10-63 |
| PROJ | [illegible] | 9-18-63 |
| | RRD [illegible] | |

TITLE: WIRING DIAGRAM — NARCO MARK 12 & VOA-4, VOA-5 OR VOR-6 (OPTIONAL)

Cessna.

DWG NO. 1470000

SUPERSEDED BY | SUPERSEDES | MODEL 336 | REV | PAGE 17.19

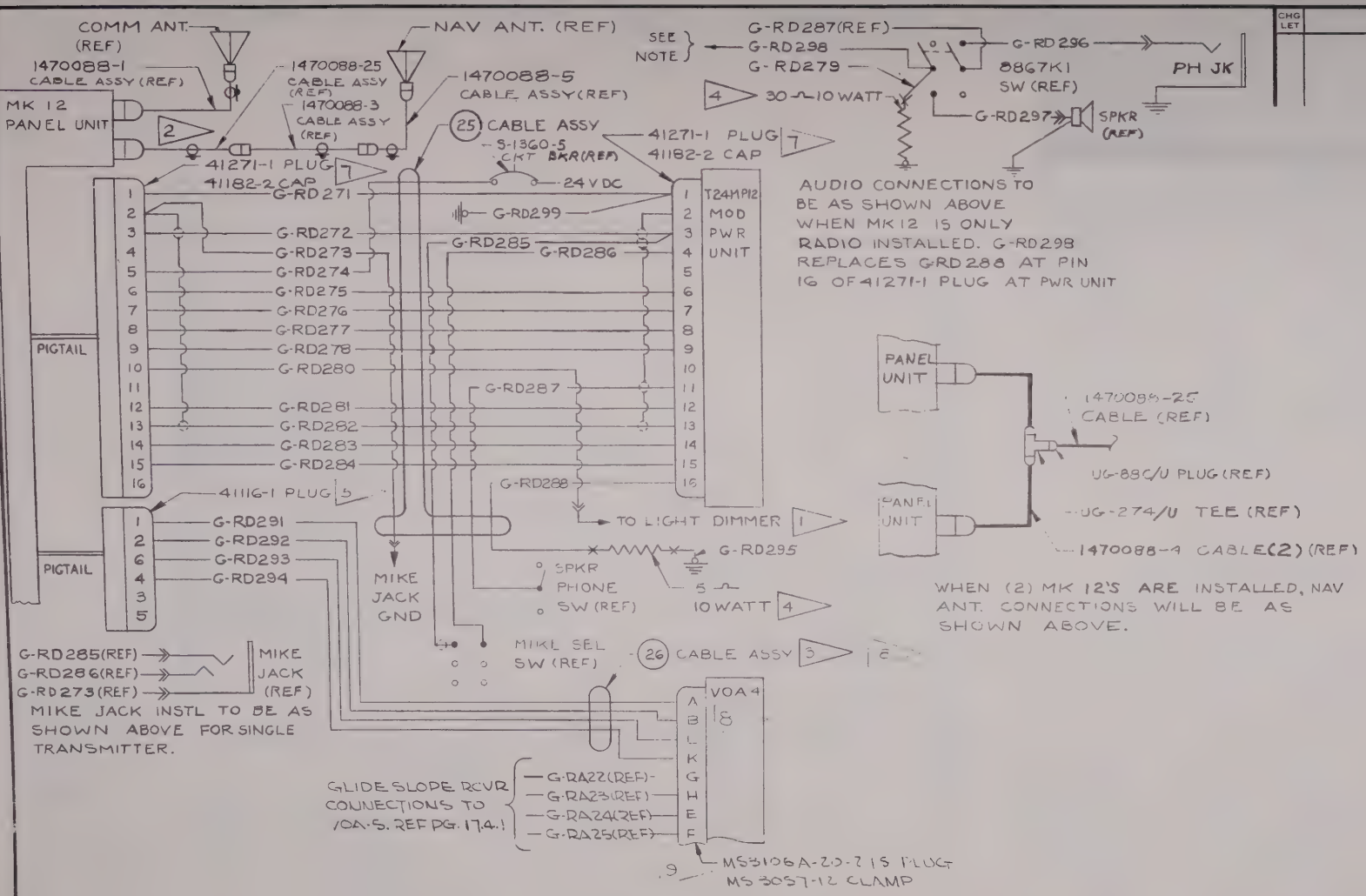


| CHG LET | REVISION | BY DATE | CHK APPD |
|---|---|---|---|

| ITEM NO | PART NO | DESCRIPTION | INSTALLED ON |
|---|---|---|---|

EQUIPMENT TABLE

CESSNA AIRCRAFT CO. COMMERCIAL AIRCRAFT DIVISION, WICHITA, KANSAS

| | NAME | DATE |
|---|---|---|
| DRAWN | ZONGKER | 8-13-63 |
| GROUP | Harden | 9-5-63 |
| CHECK | R. Stuck | 9-10-63 |
| PROJ | [illegible] | 9-12-63 |
| | 280 mod | |

TITLE: WIRING DIAGRAM — NARCO MARK 12 & VOA-4, VOA-5 OR VOA-6 (OPTIONAL)

Cessna

DWG NO. 1470000

| SUPERSEDED BY: | SUPERSEDES: | MODEL: 336 | REV: | PAGE: 17.19.1 |
|---|---|---|---|---|

FORM NO. 80-161

| CHG LET | REVISION | BY DATE | CHK APPD |
|---|---|---|---|
| | | | |

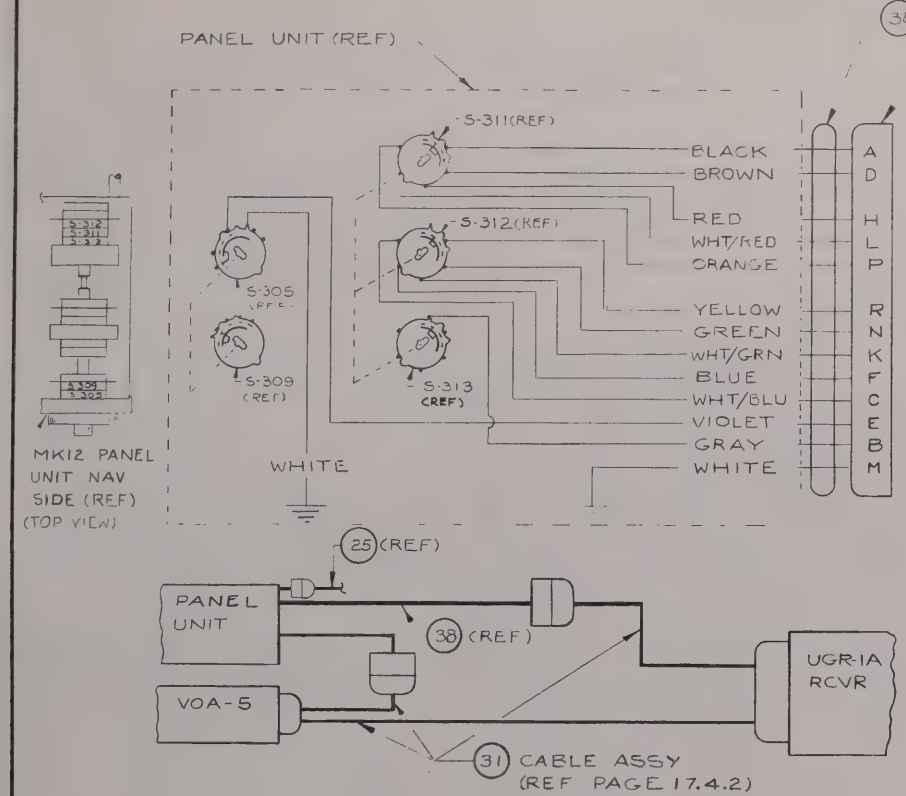


WHEN UGR-1A GLIDESLOPE RCVR & VOA-5 ARE INSTALLED CABLES ARE CONNECTED AS SHOWN ABOVE.

| WIRE CODE NO. | GA | MATERIAL | LG | TERMINALS | | SERIALS |
|---|---|---|---|---|---|---|
| | | | | | | |

WIRE TABLE

| ITEM NO | PART NO | DESCRIPTION | INSTALLED ON |
|---|---|---|---|
| | | | |

EQUIPMENT TABLE

CESSNA AIRCRAFT CO. COMMERCIAL AIRCRAFT DIVISION WICHITA, KANSAS

| | NAME | DATE |
|---|---|---|
| DRAWN | ZONGKER | 8-17-63 |
| GROUP | Gardner | 9-5-63 |
| CHECK | R. Stuck | 9-10-63 |
| PROJ | Wilson | 9-12-63 |
| | MD mgd | |

TITLE: WIRING DIAGRAM — NARCO MARK 12 & VOA-4, VOA-5 OR VOA-6 (OPTIONAL)

Cessna

DWG NO 1470000

| SUPERSEDED BY | SUPERSEDES | MODEL | REV | PAGE |
|---|---|---|---|---|
| | | 336 | | 17.19.2 |

FORM NO. 80-161

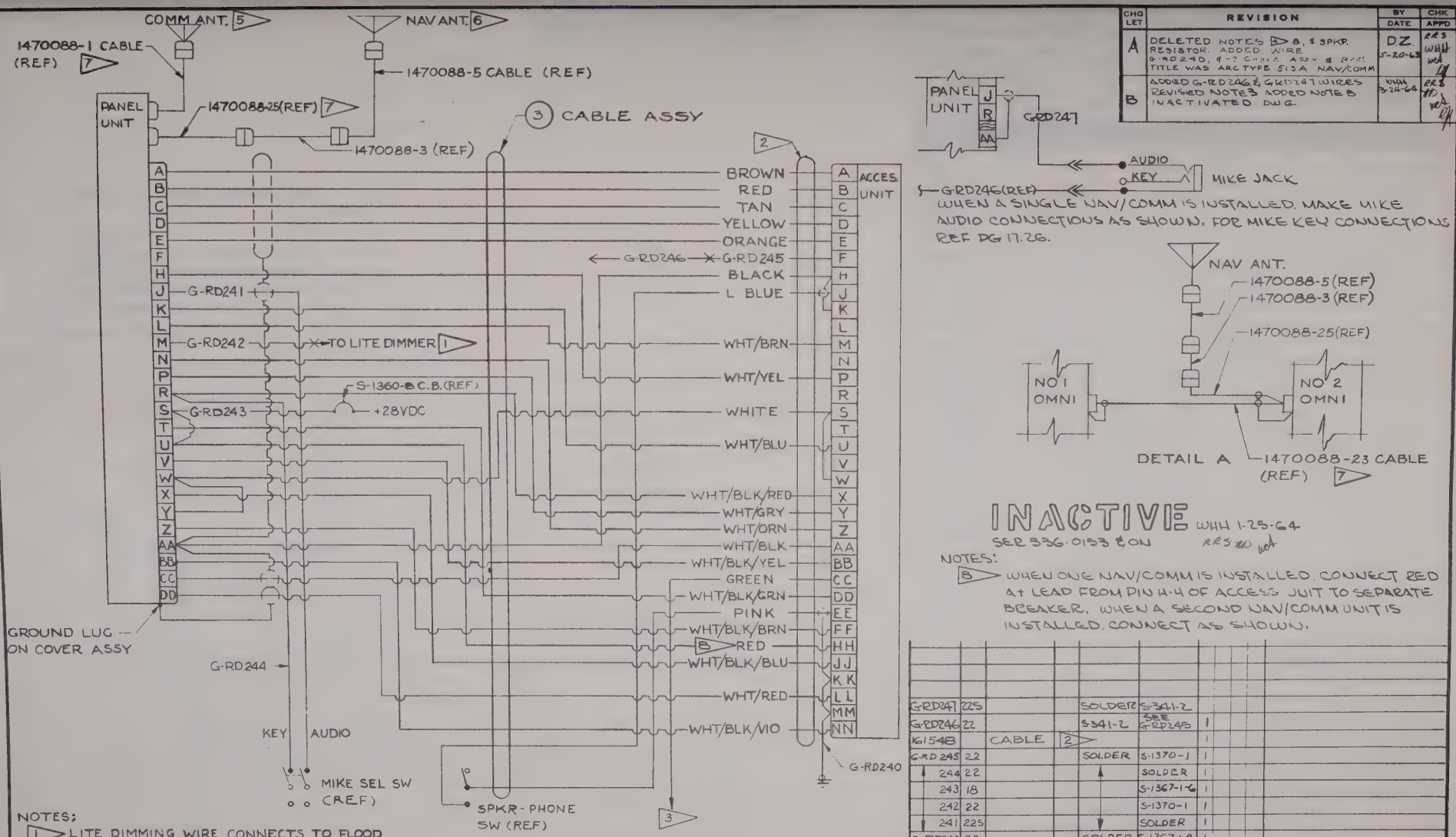


| CHG LET | REVISION | BY DATE | CHK APPD |
|---|---|---|---|
| A | DELETED NOTES 4 & 8, 5 SPKR. RESISTOR. ADDED WIRE G-RD240, 9-? CABLE ASSY & ROM. TITLE WAS ARC TYPE 513A NAV/COMM | D.Z. 5-20-63 | RRS WHH |
| B | ADDED G-RD246 & G-RD247 WIRES REVISED NOTE 3 ADDED NOTE 8 INACTIVATED DWG. | WHH 3-24-64 | RRS WHH |




INACTIVE WHH 1-25-64
SER 336-0153 & ON RRS WHH

NOTES:

8 WHEN ONE NAV/COMM IS INSTALLED, CONNECT RED A+ LEAD FROM PIN H-4 OF ACCESS UNIT TO SEPARATE BREAKER. WHEN A SECOND NAV/COMM UNIT IS INSTALLED, CONNECT AS SHOWN.

| WIRE CODE NO. OR PART NO | GA | MATERIAL OR NOMENCLATURE | LG | TERMINALS | | NO. REQ'D N/A | SERIALS |
|---|---|---|---|---|---|---|---|
| G-RD247 | 22S | | | SOLDER | S-341-2 | 1 | |
| G-RD246 | 22 | | | S-341-2 | SEE G-RD245 | 1 | |
| 161548 | | CABLE | 2 | | | 1 | |
| G-RD 245 | 22 | | | SOLDER | S-1370-1 | 1 | |
| 244 | 22 | | | | SOLDER | 1 | |
| 243 | 18 | | | | S-1367-1-6 | 1 | |
| 242 | 22 | | | | S-1370-1 | 1 | |
| 241 | 22S | | | | SOLDER | 1 | |
| G-RD240 | 22 | | | SOLDER | S-1367-1-8 | 1 | |

WIRE TABLE

NOTES:

1 LITE DIMMING WIRE CONNECTS TO FLOOD LITE DIM. RHEO WITH STD LIGHTING. WHEN OPTIONAL POST LIGHTING IS INSTALLED CONNECT TO FLIGHT INST. & RADIO DIAL LITE DIMMING RESISTOR

2 WIRING HARNESS MADE UP FROM ELECTRIC AUTO-LITE CO. CABLE NO. 161548. NUMBER CODED WIRES. NOT PART OF THIS CABLE.

3 REFER TO PAGE 17.23 FOR SPKR LEAD (GREEN) CONNECTION IN DUAL INSTALLATIONS REFER TO PAGE 17.26 FOR SPKR LEAD (GREEN) CONNECTION IN SINGLE NAV/COMM INSTAL.

5 SEE AUDIO SYSTEM WIRING FOR ANT LEADIN IF DUAL INSTALLATION IS REQD. (PAGE 17.23)

6 SEE DETAIL A FOR DUAL OMNI INSTL.

7 CABLE SOLDER DIRECT INTO DUST COVER

| ITEM NO | PART NO | DESCRIPTION | INSTALLED ON |
|---|---|---|---|

EQUIPMENT TABLE

CESSNA AIRCRAFT CO. COMMERCIAL AIRCRAFT DIVISION WICHITA, KANSAS

| | NAME | DATE |
|---|---|---|
| DRAWN | ACKERSON | 10-2-62 |
| GROUP | Harden | 10-26-62 |
| CHECK | R. Stuck | 10-29-62 |
| PROJ | [illegible] | 11-16-62 |

TITLE: WIRING DIAGRAM — CESSNA NAV-COMM 300 (OPTIONAL) (ARC TYPE 513A)

Cessna.

DWG NO. 1470000

SUPERSEDED BY PG 17.27 & 17.271 | SUPERSEDES | MODEL 336 | REV B | PAGE 17.21

FORM NO. 80-161

| CHG LET | REVISION | BY / DATE | CHK / APPD |
|---|---|---|---|
| A | ADDED NOTE 3. ADDED REF. PLUG CALLOUTS REVERSED CONNECTIONS TO PINS B & C OF 50130-0001 PLUG AT INDICATOR. DELETED ARC TYPE NUMBERS FROM EQUIPMENT. TITLE WAS ARC TYPE 521 ADF. ADDED, K11176-3 FILTER CHOKE, G-RC48, -35 CABLE ASSY & B/M. ADDED 31249 CABLE | D.Z. 5-13-63 | RRS RRD WCA |

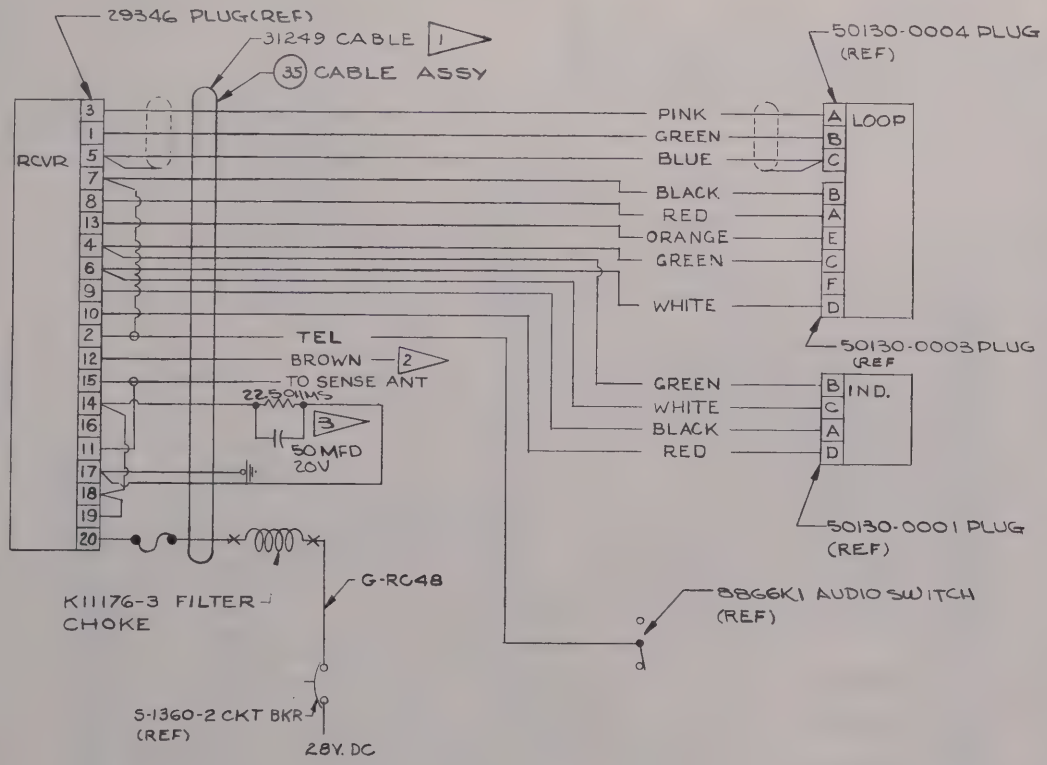


NOTES:

1. CABLE AND PLUGS VENDOR FURNISHED.
2. LITE DIM WIRE CONNECTS TO FLOOD LITE DIM RHEO WITH STD LIGHTING. WHEN OPT POST LIGHTING IS INSTALLED CONNECT TO FLIGHT INST & RADIO DIAL LIGHT DIM RESISTOR.
3. RESISTOR AND CONDENSER ARE SUPPLIED WITH MOUNTING

| WIRE CODE NO. OR PART NO. | GA | MATERIAL OR NOMENCLATURE | LG | TERMINALS | | -35 NO REQ | N/A | | | SERIALS |
|---|---|---|---|---|---|---|---|---|---|---|
| G-RC48 | 18 | | | S-B70-1 | S-1367-1-6 | 1 | | | | |
| K11176-3 | | FILTER CHOKE (NARO) | | | | 1 | | | | |
| 31249 | | CABLE (ARC) | | | | 1 | | | | |

WIRE TABLE

| ITEM NO | PART NO. | DESCRIPTION | INSTALLED ON |
|---|---|---|---|

EQUIPMENT TABLE

CESSNA AIRCRAFT CO., COMMERCIAL AIRCRAFT DIVISION, WICHITA, KANSAS

| | NAME | DATE |
|---|---|---|
| DRAWN | ACKERSON | 10-8-62 |
| GROUP | Darden | 10-26-62 |
| CHECK | R. Stuck | 10-29-62 |
| PROJ | [illegible] | 11-16-62 |

TITLE: WIRING DIAGRAM — CESSNA ADF 300 (OPTIONAL) (ARC TYPE 521A ADF)

Cessna.

DWG NO. 1470000

SUPERSEDED BY | SUPERSEDES | MODEL 336 | REV: A | PAGE: 17.22

FORM NO. 80-161

| CHG LET | REVISION | BY / DATE | CHK / APPD |
|---|---|---|---|
| A | OBSOLETED RP91 & RP101 WIRES INACTIVATED DWG | WHH 3-24-64 | RRS |

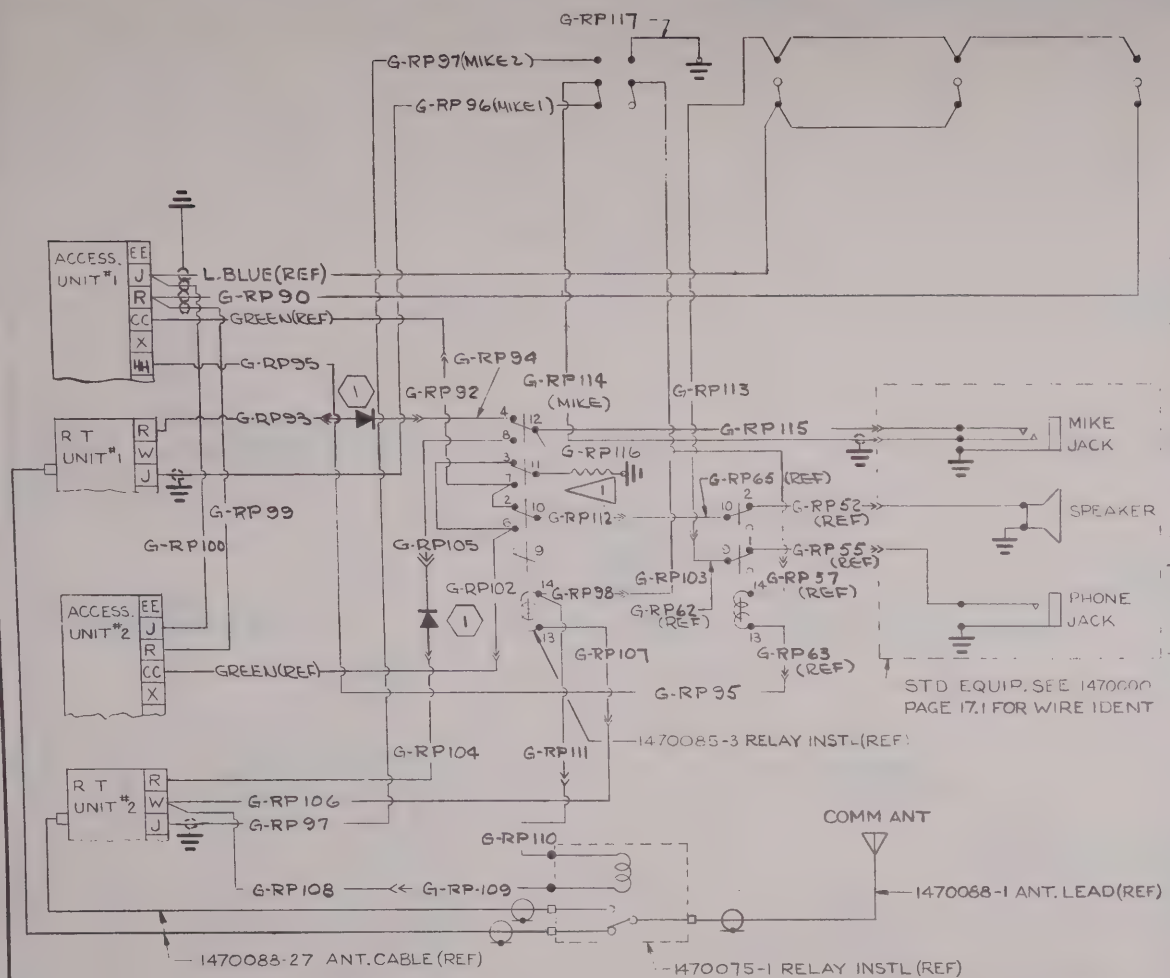


1. 30 OHM, 2 WATT OHMITE "LITTLE DEVIL" OR EQUIV.

INACTIVE WHH 1-25-64
SER 336-0153 & ON RRS

| WIRE | GA | MATERIAL | LG | TERMINALS | | | SERIALS |
|---|---|---|---|---|---|---|---|
| G-RP117 | 22 | | | SOLDER | S1367-1-8 | | |
| 116 | 22 | | | SOLDER | S-341-2 | | |
| 115 | 22 | | | SOLDER | S-341-2 | | |
| 114 | 22S | | | SOLDER | S-341-2 | | |
| 113 | 22 | | | SOLDER | S-341-2 | | |
| 112 | | | | SOLDER | S-341-2 | | |
| 111 | | | | S-341-2 | SOLDER | | |
| 110 | | | | SOLDER | S-341-2 | | |
| 109 | | | | S-341-2 | SOLDER | | |
| 108 | | | | SOLDER | S-341-2 | | |
| 107 | | | | S-341-2 | SOLDER | | |
| 106 | | | | SOLDER | S-341-2 | | |
| 105 | | | | S-341-2 | SOLDER | | |
| 104 | | | | SOLDER | S-341-2 | | |
| 103 | | | | S-341-2 | SOLDER | | |
| 102 | | | | S-341-2 | SOLDER | | |
| 101 | 22 | | | SOLDER | S-341-2 | | (OBSOLETE) |
| 100 | 22S | | | | SOLDER | | |
| 99 | 22S | | | | SOLDER | | |
| 98 | 22 | | | | S-341-2 | | |
| 97 | 22S | | | | SOLDER | | |
| 96 | 22S | | | | SOLDER | | |
| 95 | 22 | | | SOLDER | S-341-2 | | |
| 94 | | | | S-341-2 | SOLDER | | |
| 93 | | | | SOLDER | S-341-2 | | |
| 92 | | | | S-341-2 | SOLDER | | |
| 91 | 22 | | | SOLDER | S-341-2 | | (OBSOLETE) |
| G-RP90 | 22S | | | SOLDER | SOLDER | | |

WIRE TABLE

CESSNA AIRCRAFT CO., COMMERCIAL AIRCRAFT DIVISION, WICHITA, KANSAS

| | NAME | DATE |
|---|---|---|
| DRAWN | ACKERSON | 10-29-63 |
| GROUP | Harden | 11-15-63 |
| CHECK | R. Styck | 11-22-63 |
| PROJ | L. Johnson | 11-26-63 |

TITLE: WIRING DIAGRAM — AUDIO SYSTEM CESSNA NAV/COMM 300 & ADF 300 (OPTIONAL)

Cessna.

DWG NO. 1470000

SUPERSEDED BY PG 17.28.1 | SUPERSEDES | MODEL: 336 | REV A | PAGE 17.23

| ITEM NO | PART NO. | DESCRIPTION | INSTALLED ON |
|---|---|---|---|
| 1 | F-2 | DIODE | |

EQUIPMENT TABLE

(SATA)

FORM NO. 80-161

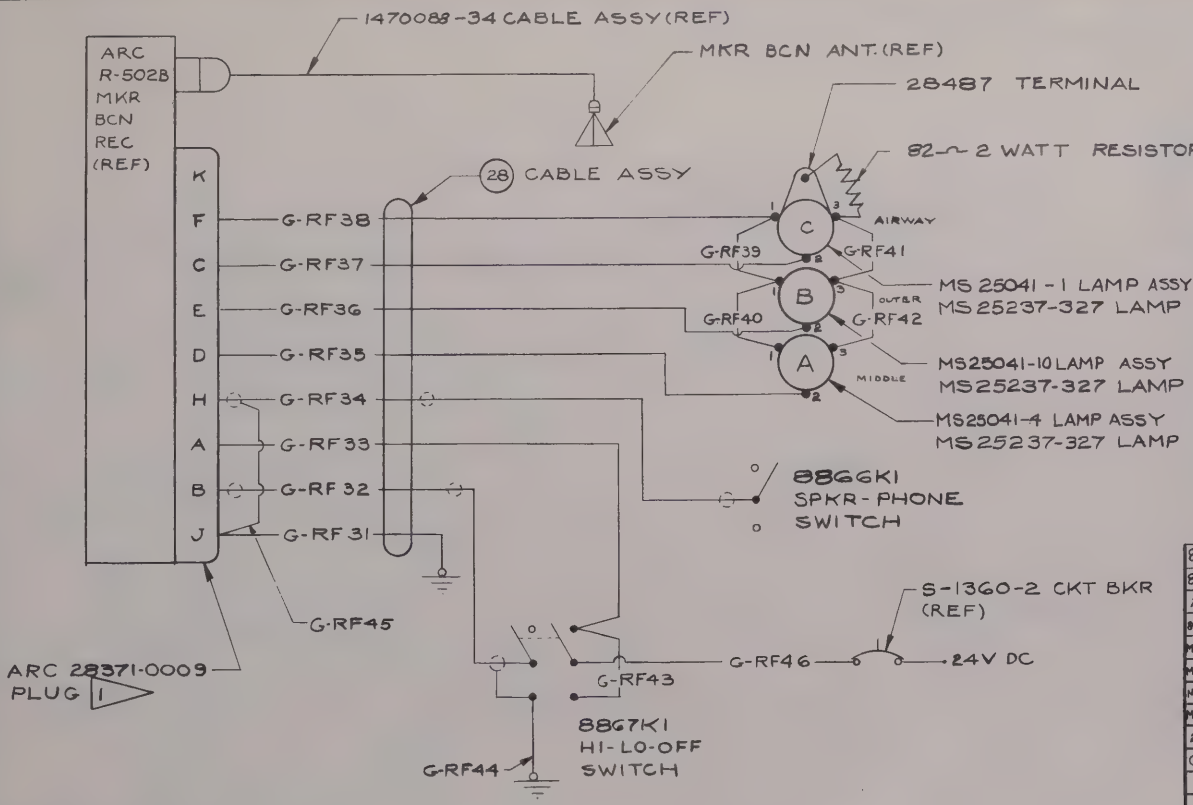


NOTES:

1. VENDOR FURNISHED
2. OHMITE "LITTLE DEVIL" OR EQUIV.

| CHG LET | REVISION | BY / DATE | CHK / APPD |
|---|---|---|---|
| | | | |

| WIRE CODE NO. OR PART NO. | GA | MATERIAL OR NOMENCLATURE | LG | TERMINALS | | -28 NO. REQD | N/A | SERIALS |
|---|---|---|---|---|---|---|---|---|
| 8867K1 | | SWITCH (CUT) | | | | 1 | | |
| 8866K1 | | SWITCH (CUT) | | | | 1 | | |
| 28487 | | TERMINAL (ARC) | | | | 1 | | |
| 82Ω 2 WATT | | RESISTOR 2 | | | | 1 | | |
| MS25237-327 | | LAMP | | | | 3 | | |
| MS25041-10 | | LAMP ASSY | | | | 1 | | |
| MS25041-4 | | LAMP ASSY | | | | 1 | | |
| MS25041-1 | | LAMP ASSY | | | | 1 | | |
| 28371-0009 | | PLUG 1 | | | | 1 | | |
| G-RF46 | 22 | | | SOLDER | S-1367-1-6 | 1 | | |
| 45 | | | | | SOLDER | 1 | | |
| 44 | | | | | S-1367-1-8 | 1 | | |
| 43 | | | | | SOLDER | 1 | | |
| 42 | | | | | | 1 | | |
| 41 | | | | | | 1 | | |
| 40 | | | | | | 1 | | |
| 39 | | | | | | 1 | | |
| 38 | | | | | | 1 | | |
| 37 | | | | | | 1 | | |
| 36 | | | | | | 1 | | |
| 35 | 22 | | | | | 1 | | |
| 34 | 22S | | | | | 1 | | |
| 33 | 22 | | | | | 1 | | |
| 32 | 22S | | | | SOLDER | 1 | | |
| G-RF31 | 22 | | | SOLDER | S-1367-1-8 | 1 | | |

WIRE TABLE

CESSNA AIRCRAFT CO. COMMERCIAL AIRCRAFT DIVISION WICHITA KANSAS

| | NAME | DATE |
|---|---|---|
| DRAWN | ZONGKER | 5-2-63 |
| GROUP | Harden | 7-5-63 |
| CHECK | R. Stuck | 7-5-63 |
| PROJ | Hyman | 7-8-63 |
| STRESS | R. DURYCH | 7-8-63 |

TITLE: WIRING DIAGRAM — CESSNA 300 MARKER BEACON RECEIVER (OPTIONAL)

Cessna.

DWG NO: 1470000

SUPERSEDED BY | SUPERSEDES | MODEL: 336 | REV: | PAGE: 17.25

| ITEM NO | PART NO. | DESCRIPTION | INSTALLED ON |
|---|---|---|---|

EQUIPMENT TABLE

FORM NO. 80-161

| CHG LET | REVISION | BY / DATE | CHK / APPD |
|---|---|---|---|
| | | | |

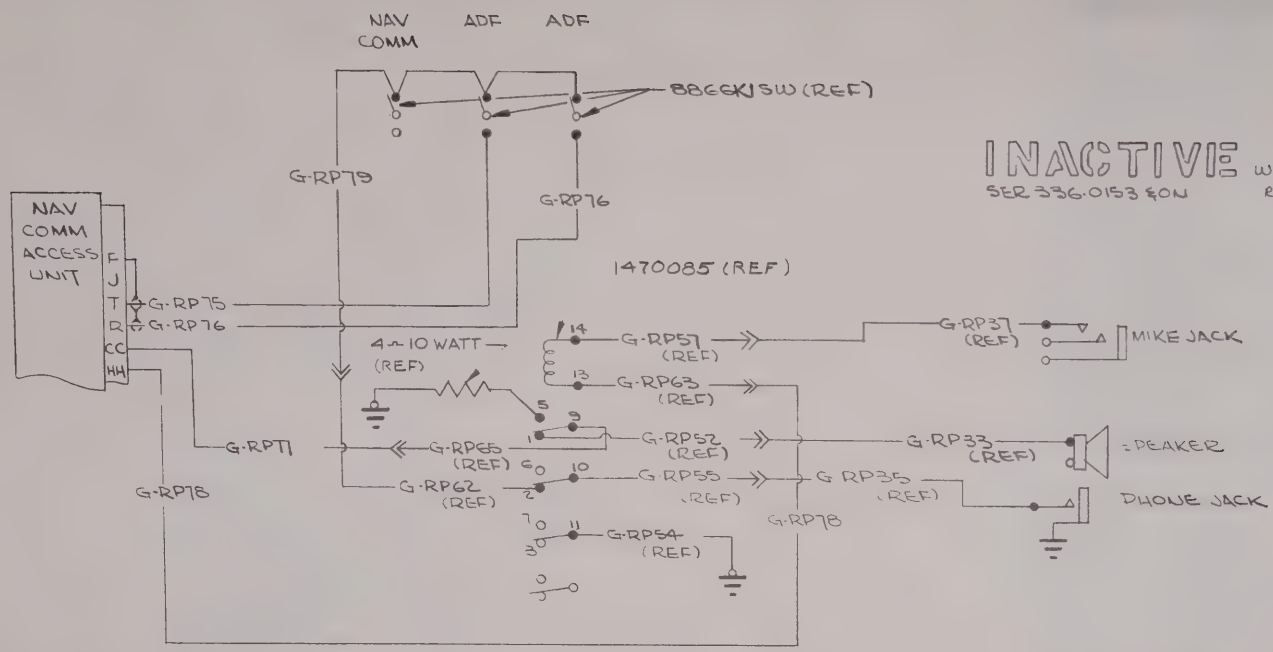


INACTIVE WITH 1-25-64 SER 336-0153 & ON RRS

| WIRE CODE NO | GA | MATERIAL | LG | TERMINALS | | SERIALS |
|---|---|---|---|---|---|---|
| G-RP79 | 22 | | | SOLDER | S-341-2 | |
| 78 | 22 | | | | S-341-2 | |
| 77 | 22 | | | | S-341-2 | |
| 76 | 22 | | | | SOLDER | |
| G-RP75 | 22 | | | SOLDER | SOLDER | |

WIRE TABLE

| ITEM NO | PART NO | DESCRIPTION | INSTALLED ON |
|---|---|---|---|
| | | | |

EQUIPMENT TABLE

CESSNA AIRCRAFT CO. COMMERCIAL AIRCRAFT DIVISION, WICHITA, KANSAS

| | NAME | DATE |
|---|---|---|
| DRAWN | HARDEN | 6-26-63 |
| GROUP | [illegible] | 8-21-63 |
| CHECK | [illegible] | 8-22-63 |
| PROJ | [illegible] | 9-25-63 |

TITLE: WIRING DIAGRAM — CESSNA AUDIO SYSTEM (OPTIONAL)

Cessna.

DWG NO. 1470000

| SUPERSEDED BY | SUPERSEDES | MODEL: | REV: | PAGE: |
|---|---|---|---|---|
| PG 17.28 | | 336 | | 17.26 |

FORM NO. 80-161

NOTES:

1. FOR SPKR-PHONE & MICROPHONE CONNECTIONS WHEN NAV/COMM 300 IS INSTALLED WITH ANOTHER RADIO (SUCH AS AN ADF 300) REF 1470000 PG 17.28. REF 1470000 PG 17.28.1 FOR THESE CONNECTIONS WHEN DUAL NAV/COMM 500'S ARE INSTALLED.
2. LIGHT DIM WIRE CONNECTS TO FLOOD LT. DIMMING RHEOSTAT WITH STANDARD LIGHTING. WHEN OPT. POST LIGHTING IS INSTALLED CONNECT TO FLIGHT INST'S & RADIO DIAL LT. DIMMING RESISTOR.
3. VENDOR SUPPLIED WITH 30420 MOUNTING
4. ALL WIRES PER S-1460 UNLESS NOTED
5. -70 CABLE ASSY TO BE USED FOR SPARES & ACCESSORY KITS
6. WHEN DUAL NAV/COMM 300'S ARE INSTALLED, CONNECT THE AUDIO AMP A+ LEAD (RED/WHT) OF THE SECOND UNIT TO THE SECOND NAV/COMM CIRCUIT BREAKER.

| CHG LET | REVISION | BY DATE | CHK APPD |
|---|---|---|---|
| | | | |

| | WIRE CODE NO. OR PART NO | GA | MATERIAL [4] OR NOMENCLATURE | LG | TERMINALS | | -68 CABLE ASSY | -69 | -70 | [5] SERIALS |
|---|---|---|---|---|---|---|---|---|---|---|
| | AN960-4L | | WASHER | | | | | | 2 | |
| | NAS446-2-3 | | NUT | | | | | | 1 | |
| | S1115-6-8 | | SCREW | | | | | | 1 | |
| | S1115-8 | | CLAMP | | | | | | 1 | |
| | S1155-3 | | CLAMP | | | | | | 2 | |
| | 30420 | | MOUNT(ARC) | | | | | | 1 | |
| | -68 | | CABLE ASSY | | | | | | 1 | |
| | 1488-4 | | TERM(SHIELD) | | | | | | 1 | |
| [3] | 51389 | | PLATE(ARC) | | | | | | 1 | |
| [3] | 29753 | | CONN(ARC) | | | | | | 1 | |
| [3] | 29752 | | CONN (ARC) | | | | | | 1 | |
| [3] | 338-4032 | | SCREW(ARC) | | | | | | 2 | |
| | | | | | | | | | 1 | |
| [3] | 29747-0018 | | PLUG(ARC) | | | | 1 | 1 | | |
| | BLU-TAN | 22S | S1461-22-6-10 | | SOLDER | | 1 | 1 | | |
| | BLU TAN | 22S | | | | | 1 | 1 | | |
| | BLU TAN | 22S | | | | | 1 | 1 | | |
| | BLU TAN | 22S | | | | | 1 | 1 | | |
| | BLU-TAN | 22S | S1461-22-6-10 | | | | 1 | 1 | | |
| | BLUE | 22 | -22-6-0 | | | S-341-2 | | 1 | | |
| | BLACK | 18 | -18-0 | | | S1367-28 | 1 | 1 | | |
| | TAN | 22S | S1461-22-10 | | | S-341-2 | | 1 | | |
| | TAN | 22S | S1461-22-10 | | | SOLDER | 1 | | | |
| | WHT-RED | 22 | -22-9-2 | | | S-341-2 | | 1 | | |
| | WHT-RED | 22 | -22-9-2 | | | S-341-2 | 1 | | | |
| | YEL | 18 | -18-4 | | | S-341-2 | 1 | 1 | | |
| | RED | 18 | -18-2 | | | S1367-1-6 | 1 | 1 | | |
| | GRN-RED | 20 | -20-5-2 | | | S-341-2 | 1 | 1 | | |
| | RED-WHT | 18 | -18-2-9 | | | S-1367-1-6 | 1 | 1 | | |
| | BLU-TAN | 22S | S1461-22-6-10 | | | SOLDER | | 1 | | |
| | BLU-BLK | 22S | S1461-22-6-0 | | SOLDER | SOLDER | 1 | 1 | | |

WIRE TABLE

CESSNA AIRCRAFT CO COMMERCIAL AIRCRAFT DIVISION WICHITA, KANSAS

| | NAME | DATE |
|---|---|---|
| DRAWN | HARDEN | 1-30-64 |
| GROUP | Harden | 3-24-64 |
| CHECK | P. Lynch | 3-31-64 |
| PROJ | [illegible] | 4-2-64 |

TITLE: WIRING DIAGRAM — CESSNA NAV/COMM 300 (OPTIONAL) (ARC TYPE 514A)

Cessna.

DWG NO. 1470000

| SUPERSEDED BY | SUPERSEDES | MODEL | REV. | PAGE |
|---|---|---|---|---|
| | 17.21 | 336 | | 17.27 |

| ITEM NO. | PART NO. | DESCRIPTION | INSTALLED ON |
|---|---|---|---|

EQUIPMENT TABLE

FORM NO. 80-161

| CHG LET | REVISION | BY DATE | CHK APPD |
|---|---|---|---|
| | | | |

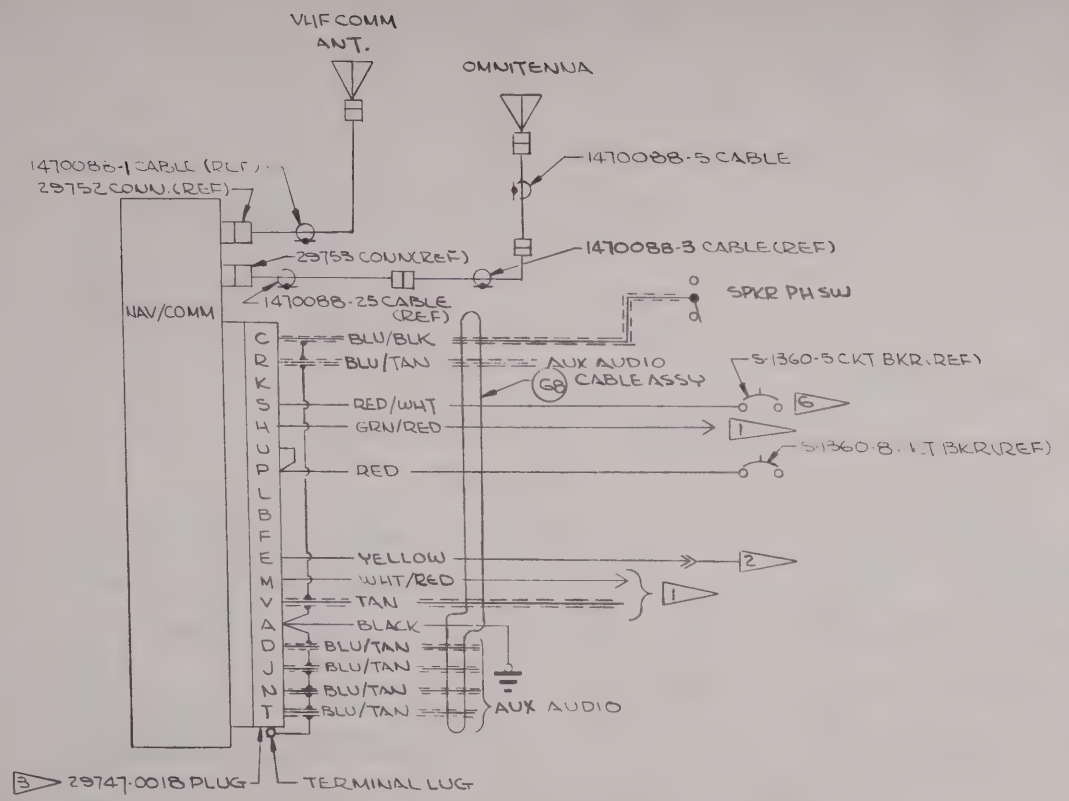


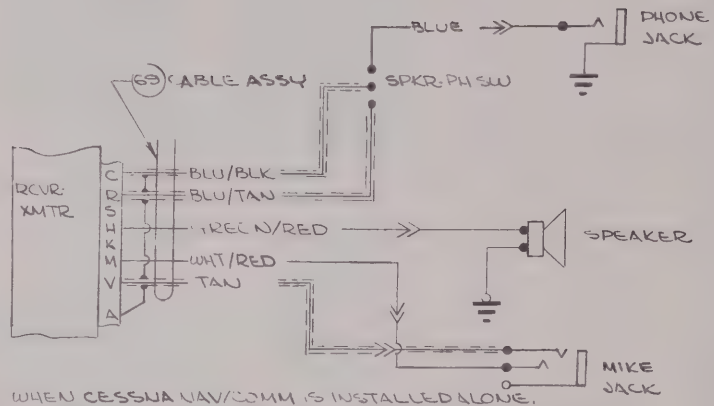


WHEN CESSNA NAV/COMM IS INSTALLED ALONE, MAKE SPEAKER-PHONE & MIKE CONNECTIONS AS SHOWN

| WIRE CODE NO | GA | MATERIAL | LG | TERMINALS | | SERIALS |
|---|---|---|---|---|---|---|
| | | | | | | |

WIRE TABLE

| ITEM NO | PART NO | DESCRIPTION | INSTALLED ON |
|---|---|---|---|
| | | | |

EQUIPMENT TABLE

CESSNA AIRCRAFT CO., COMMERCIAL AIRCRAFT DIVISION, WICHITA, KANSAS

| | NAME | DATE |
|---|---|---|
| DRAWN | HARDEN | 12-27-63 |
| GROUP | | 3-31-64 |
| CHECK | | 3-31-64 |
| PROJ | | 4-2-64 |
| ENGR | | |

TITLE: WIRING DIAGRAM — CESSNA NAV/COMM 300 (OPTIONAL) (ARC TYPE 514A)

Cessna.

DWG NO 1470000

| SUPERSEDES | SUPERSEDED BY | MODEL | REV | PAGE |
|---|---|---|---|---|
| 17-21 | | 336 | | 17-27-1 |

FORM NO 80161

| CHG LET | REVISION | BY / DATE | CHK / APPD |
|---|---|---|---|
| | | | |

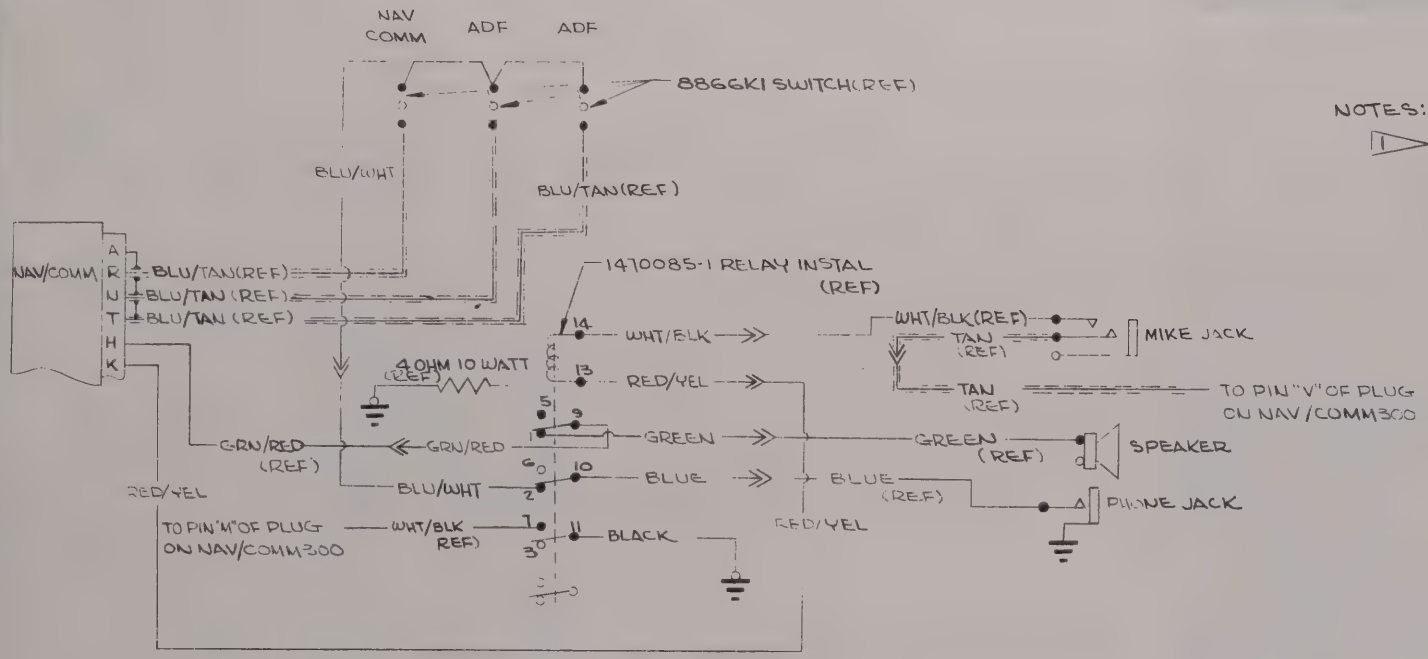


NOTES:

1. ALL WIRES PER S-1460 UNLESS NOTED

| WIRE CODE NO | GA | MATERIAL | LG | TERMINALS | | | SERIALS |
|---|---|---|---|---|---|---|---|
| BLACK | 22 | -22-0 | | SOLDER | S-1367-1-8 | | |
| GREEN | 20 | -20-5 | | SOLDER | S-341-2 | | |
| GRN/RED | 20 | -20-5-2 | | S-341-2 | SOLDER | | |
| RED/YEL | 22 | -22-2-4 | | S-341-2 | SOLDER | | |
| RED/YEL | 22 | -22-2-4 | | SOLDER | S-341-2 | | |
| WHT/BLK | 22 | -22-9 | | S-341-2 | SOLDER | | |
| BLUE | 22 | -22-6 | | SOLDER | S-341-2 | | |
| BLU/WHT | 22 | -22-6-9 | | S-341-2 | SOLDER | | |
| BLU/WHT | 22 | -22-6-9 | | SOLDER | S-341-2 | | |

1 WIRE TABLE

CESSNA AIRCRAFT CO. COMMERCIAL AIRCRAFT DIVISION WICHITA, KANSAS

| | NAME | DATE |
|---|---|---|
| DRAWN | HARDEN | 12 21 63 |
| GROUP | Harden | 3 31 64 |
| CHECK | [illegible] | 5-31-64 |
| PROJ | [illegible] | 4-2-64 |

TITLE: WIRING DIAGRAM — AUDIO SYSTEM-SINGLE NAV/COMM 300 (OPT) (ARC TYPE 514A)

Cessna.

DWG NO. 1470000

| SUPERSEDED BY | SUPERSEDES | MODEL | REV | PAGE |
|---|---|---|---|---|
| | PG 17.26 | 3-36 | | 17.28 |

| ITEM NO | PART NO | DESCRIPTION | INSTALLED ON |
|---|---|---|---|
| | EQUIPMENT TABLE | | |

FORM NO. 80161

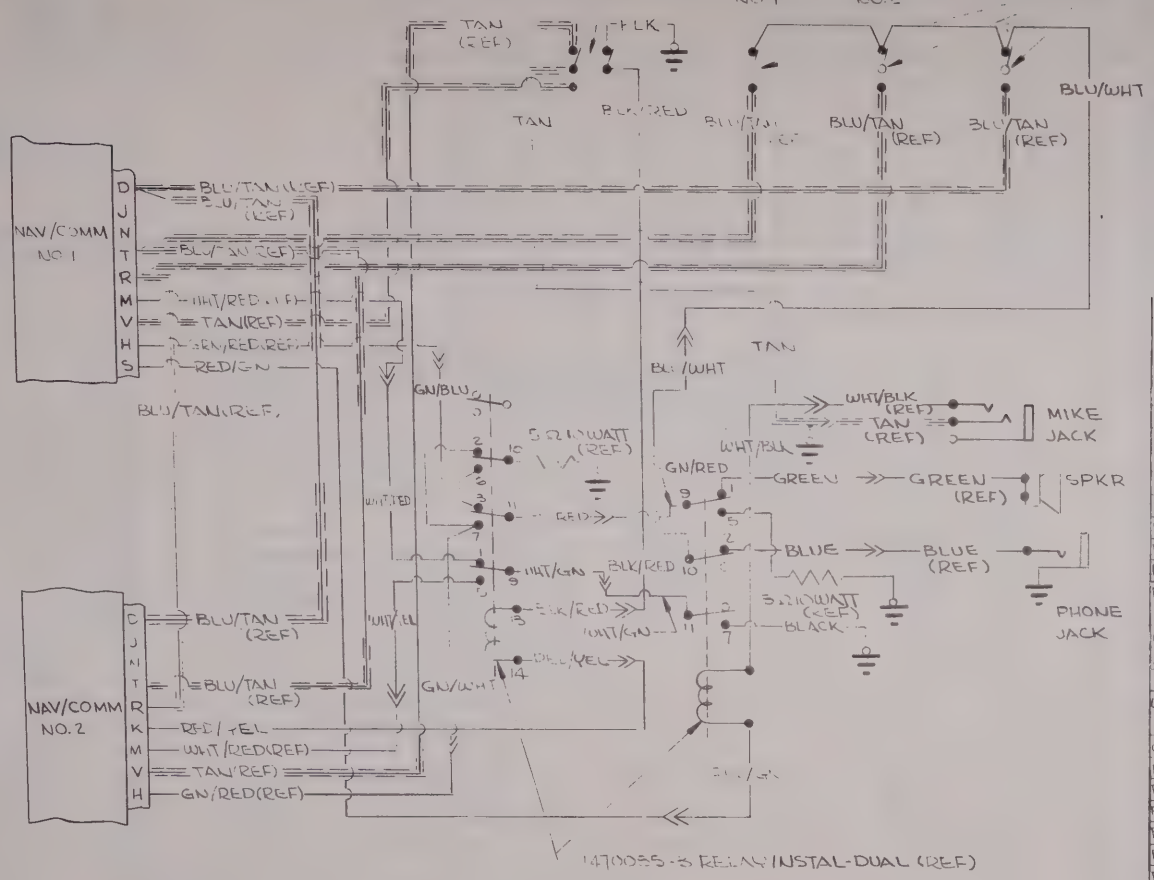


| WIRE CODE NO | GA | MATERIAL | LG | TERMINALS | | SERIALS |
|---|---|---|---|---|---|---|
| TAN | 22S | S1461-22-10 | | S-341-2 S1361-1-8 | SOLDER | |
| BLU/WHT | 22 | -22-6-10 | | S-341-2 | SOLDER | |
| BLU/WHT | 22 | -22-6-9 | | SOLDER | S-341-2 | |
| BLUE | 22 | -22-6 | | S-341-2 | SOLDER | |
| RED/GN | 20 | -20-2-5 | | S-341-2 | SOLDER | |
| RED/GN | 20 | -20-2-5 | | SOLDER | S-341-2 | |
| WHT/GN | 22 | -22-9-5 | | S-341-2 | SOLDER | |
| WHT/GN | 22 | -22-9-5 | | SOLDER | S-341-2 | |
| WHT/YEL | 22 | -22-9-4 | | S-341-2 | SOLDER | |
| WHT/RED | 22 | -22-9-2 | | S-341-2 | SOLDER | |
| WHT/BLK | 22 | -22-9-0 | | S-341-2 | SOLDER | |
| RED/YEL | 22 | -22-2-4 | | S-341-2 | SOLDER | |
| RED/YEL | 22 | -22-2-4 | | SOLDER | S-341-2 | |
| BLK/RED | 22 | -22-0-2 | | S-341-2 | SOLDER | |
| BLK/RED | 22 | -22-0-2 | | SOLDER | S-341-2 | |
| BLACK | 22 | -22-0 | | SOLDER | S1361-1-8 | |
| BLACK | 22 | -22-0 | | SOLDER | S1361-1-8 | |
| GN/WHT | 20 | 20S-9 | | S-341-2 | SOLDER | |
| RED/YEL | 20 | -20-5 | | SOLDER | S-341-2 | |
| GN/RED | 20 | -20-5-2 | | S-341-2 | SOLDER | |
| GN/RED | 20 | -20-5-2 | | SOLDER | S-341-2 | |
| GN/BLU | 20 | -20-5-6 | | S-341-2 | SOLDER | |

WIRE TABLE

NOTES:

1. WIRE MATERIAL PER S-1460 UNLESS NOTED

| ITEM NO | PART NO | DESCRIPTION | INSTALLED ON |
|---|---|---|---|

EQUIPMENT TABLE

| CHG LET | REVISION | BY DATE | CHK APPD |
|---|---|---|---|

CESSNA AIRCRAFT CO COMMERCIAL AIRCRAFT DIVISION WICHITA KANSAS

| | NAME | DATE |
|---|---|---|
| DRAWN | HARDEN | 12-21-63 |
| GROUP | [illegible] | 3-31-64 |
| CHECK | [illegible] | 3-31-64 |
| PROJ | [illegible] (RHD) | 4-1-64 |

TITLE: WIRING DIAGRAM — AUDIO SYSTEM-DUAL CESSNA NAV/COMM 300 (ODT) (ARC TYPE 514A)

Cessna.

DWG NO. 1470000

SUPERSEDED BY

SUPERSEDES PG17.23

MODEL [illegible]

REV.

PAGE: 17.28.1

FORM NO. 80-161

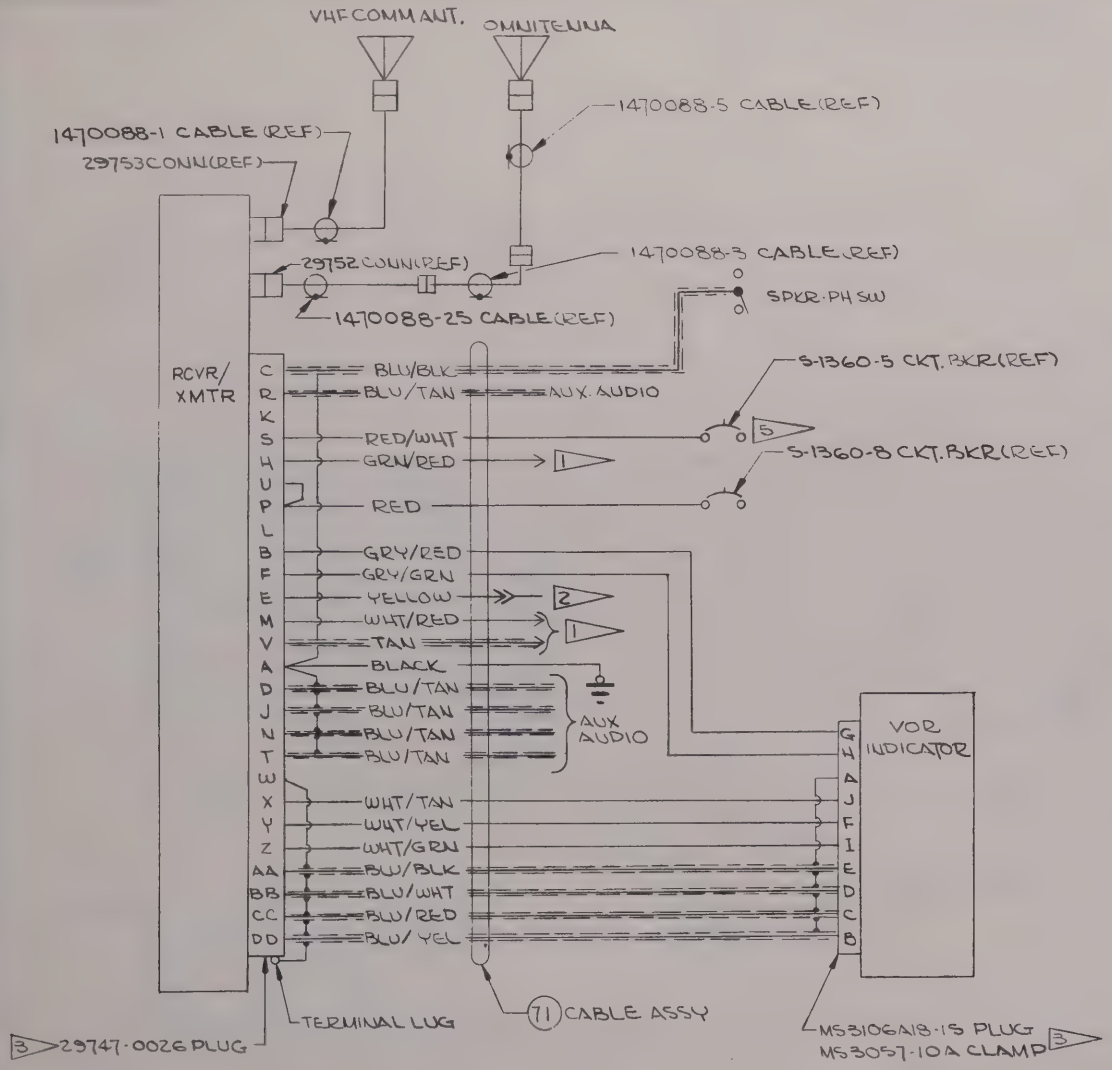


| CHG LET | REVISION | BY DATE | CHK APPD |
|---|---|---|---|
| | | | |

NOTES:

1. FOR SPKR-PHONE & MICROPHONE CONNECTIONS WHEN NAV, COMM 300R IS INSTALLED WITH ANOTHER RADIO (SUCH AS AN ADF 300) REF 1470000 PG 17.28 REF 1470000 PG 17.28.1 FOR THESE CONNECTIONS WHEN DUAL NAV/COMM 300R'S ARE INSTALLED.
2. LIGHT DIM WIRE CONNECTS TO FLOOD LT DIMMING RHEOSTAT WITH STANDARD LIGHTING. WHEN OPT POST LIGHTING IS INSTALLED. CONNECT TO FLIGHT INSTR & RADIO DIAL LT DIMMING RESISTOR.
3. VENDOR SUPPLIED.
4. ALL WIRES PER S-1460 UNLESS NOTED.
5. WHEN DUAL NAV/COMM 300R'S ARE INSTALLED CONNECT THE AUDIO AMP A+ LEAD (RED/WHT) OF THE SECOND UNIT TO THE SECOND NAV/COMM CIRCUIT BREAKER.

| WIRE CODE NO | GA | MATERIAL (4) NOMENCLATURE | LG | TERMINALS | (71) | SERIALS |
|---|---|---|---|---|---|---|
| MS3057-10A | | CLAMP | | | 1 | |
| MS3106A18-1S | | PLUG | | | 1 | |
| 29747-0026 | | PLUG | | | 1 | |
| BLU/YEL | 22S | S-1461-22-64 | | SOLDER SOLDER | 1 | |
| BLU/RED | 22S | -22-62 | | | 1 | |
| BLU/WHT | 22S | -22-69 | | | 1 | |
| BLU/BLK | 22S | S-1461-22-60 | | | 1 | |
| WHT/GRN | 22 | -22-9-5 | | | 1 | |
| WHT/YEL | 22 | -22-9-4 | | | 1 | |
| WHT/TAN | 22 | -22-9-10 | | SOLDER | 1 | |
| BLU/TAN | 22S | S-1461-22-610 | | | 1 | |
| BLU/TAN | 22S | | | | 1 | |
| BLU/TAN | 22S | | | | 1 | |
| BLU/TAN | 22S | S-1461-22-610 | | | 1 | |
| BLACK | 18 | -18-0 | | S-1367-1-8 | 1 | |
| TAN | 22S | S-1461-22-10 | | S-341-2 | 1 | |
| WHT/RED | 22 | -22-9-2 | | S-341-2 | 1 | |
| YEL | 18 | -18-4 | | S-341-2 | 1 | |
| GRY/GRN | 22 | -22-8-5 | | SOLDER | 1 | |
| GRY/RED | 22 | -22-8-2 | | SOLDER | 1 | |
| RED | 18 | -18-2 | | S-1367-1-6 | 1 | |
| GRN/RED | 20 | -20-5-2 | | S-341-2 | 1 | |
| RED/WHT | 18 | -18-2-5 | | S-1367-1-6 | 1 | |
| BLU/TAN | 22S | S-1461-22-610 | | SOLDER | 1 | |
| BLU/BLK | 22S | S-1461-22-60 | | SOLDER SOLDER | 1 | |

WIRE TABLE

| ITEM NO | PART NO. | DESCRIPTION | INSTALLED ON |
|---|---|---|---|

EQUIPMENT TABLE

CESSNA AIRCRAFT CO., COMMERCIAL AIRCRAFT DIVISION, WICHITA, KANSAS

| | NAME | DATE |
|---|---|---|
| DRAWN | HARDEN | 7-17-64 |
| GROUP | | |
| CHECK | | 8-10-64 |
| PROJ | RHD | 8-13-68 |

TITLE: WIRING DIAGRAM — CESSNA NAV/COMM 300R (OPTIONAL (ARC TYPE 514R)

Cessna.

DWG NO 1470000

| SUPERSEDED BY | SUPERSEDES | MODEL | REV | PAGE |
|---|---|---|---|---|
| | | 3-6 | | 17.29 |

FORM NO. 80-161

# TABLE OF CONTENTS


| PAGE NO. | TITLE | DATE ISSUED | REV |
|---|---|---|---|
| | **1965 SERIALS & ON**<br>**337-0001 & ON** | | |
| 2.0.1 | Speaker Phone Jack & Microphone Jack | 6-28-65 | A |
| 2.0.2 | Wiring Diagram - Audio System Cessna 500 Series | 6-21-65 | A Inac. |
| 2.1.1 | Wiring Diagram - Cessna Nav/Com 300R (ARC Type 514R, 515R) | 5-22-64 | A |
| 2.2.1 | Wiring Diagram - Cessna Nav/Com 300 (ARC Type 514A) | 6-21-65 | Inac. |
| 2.3.1 | Wiring Diagram - Cessna ADF 500 (Goniometer) (ARC 318G) | 10-18-65 | A |
| 2.8.1.1 | Wiring Diagram - Cessna Nav/Omni 500 (ARC Type 319G) | 11-24-64 | |
| 2.9.1 | Wiring Diagram - Cessna ADF 500 (ARC Type 318G) | 5-22-64 | Inac. |
| 2.14.1 | Wiring Diagram - Cessna XCVR 500 (ARC Type 302G) | 11-18-64 | A |
| 2.15.1.1 | Wiring Diagram - Cessna Nav/Com 500 (ARC Type 317G) | 4-9-65 | A |
| 2.17.1 | Audio System - Single Nav/Com 300 (ARC Type 514A, 514R, 524A) | 6-21-65 | A Inac. |
| 2.18.1 | Audio System - Dual Nav/Com 300 (ARC Type 514A, 514R, 524A) | 6-21-65 | A Inac. |
| 2.19.2 | Wiring Diagram - Sunair T-10R & T-5-RA H. F. | 3-22-65 | Inac. |
| 2.22.1 | Wiring Diagram - Cessna Nav/Omni 300 (ARC Type 525A) | 11-24-64 | A |
| 2.23.1 | W.D. Pantronics DX10-DA Transceiver | 7-15-65 | A |
| 2.24.1 | Cessna Marker Beacon 300 (ARC Type R-502B) | 10-5-64 | |
| 2.26.1 | Cable Assembly - KN-60 DME | 11-24-64 | |
| 2.31.1 | Narco Mark 12, VOA-4, VOA-5, VOA-6 | 11-18-64 | |
| 2.32.1 | W.D. -Narco UGR-1A Glideslope Receiver with Narco Mark 12 & VOA-5 | 2-23-65 | |
| 2.33 | Wiring Diagram - Audio System - Narco & King | 6-21-65 | Inac. |
| 2.34 | Cessna ADF 300 (ARC Type 521B) | 1-26-65 | |
| 2.39 | W.D. Isolation Amplifier King KA-11 | 10-26-65 | Inac. |
| 2.40.1 | Transmitter Selector Switch | 6-21-65 | |
| 2.41 | Audio System - Cessna 500 Series Radios | 6-21-65 | |
| 2.42.1 | Wiring Diagram - King KY-95E | 3-5-65 | |
| 2.46 | Wiring Diagram - Muting Relay; Audio Sel Relay; XMTR Sel Switch | 3-4-65 | |
| 2.47 | Audio System - Dual Nav/Com 300R & Com 300 (ARC Type 515R & 524A) | 6-21-65 | |

# TABLE OF CONTENTS


| PAGE NO. | TITLE | DATE ISSUED | REV |
|---|---|---|---|
| 2.48.1 | W.D. - Marker Beacon Cessna Nav/Omni 300 (ARC Type 525A) | 10-1-65 | A |
| 2.49 | Audio System - Narco & King | 10-26-65 | Inac. |
| 2.50 | Audio System - Single Nav/Com 300R - Com 300 (ARC Type 515R & 524A) | 6-21-65 | NC |
| 2.51 | Auxiliary Microphone Jack & Control Wheel Key | 9-1-65 | NC |
| 2.52.1 | Wiring Diagram - King KX-160E Nav/Com | 8-10-65 | NC |
| 2.53 | Wiring Diagram - Bendix ADF-T-12C | 8-20-65 | NC |
| 2.54.1 | Wiring Diagram - Audio System - Narco & King | 10-26-65 | NC |
| | Drawing No. 1570000 | | |
| 14.2 | Wiring Diagram - Cessna Nav-O-Matic 200 Autopilot (Opt.) | 12-28-64 | |
| 14.3 | Wiring Diagram - Cessna Nav-O-Matic 300 Autopilot (Opt.) | 12-28-64 | |
| 14.4.0 | Wiring Diagram - Cessna Nav-O-Matic 400 Autopilot (Opt.) | 12-28-64 | |
| 14.4.1 | Wiring Diagram - Cessna Nav-O-Matic 400 Autopilot (Opt.) | 12-28-64 | |

| CHG LET | REVISION | BY DATE | CHK APPD |
|---|---|---|---|
| A | TAN WIRE 22 GA WAS 225 GA; ADDED GRN WIRE TO SPKR; ADDED DETAIL "A" ADDED GRN WIRE; INACTIVATED GRN, BLK & GRN WIRES (SR4839) | W J R 6-9-65 | |

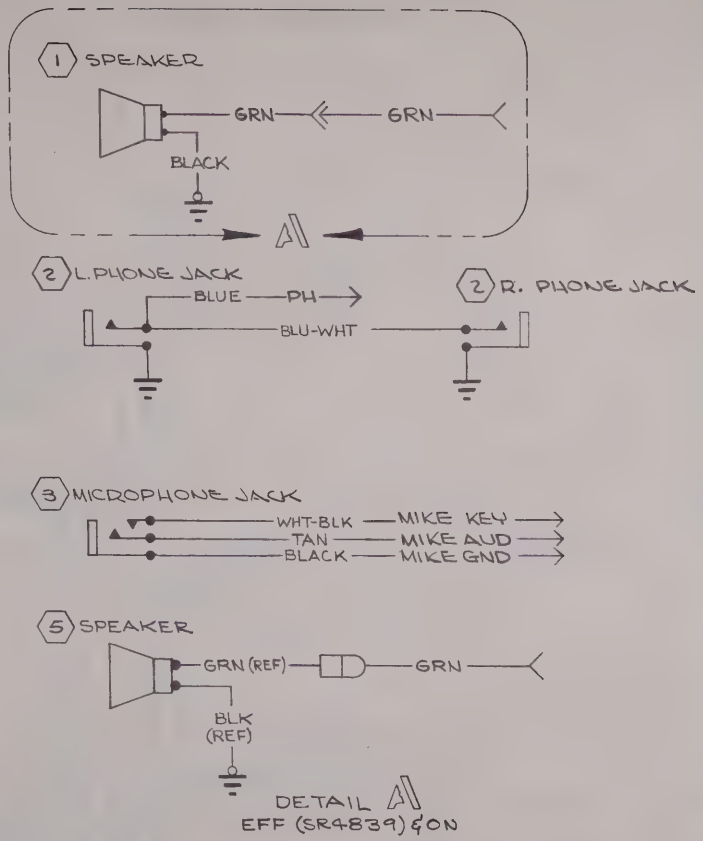


DETAIL A
EFF (SR4839) & ON

NOTE:
1. ALL WIRES PER S-1460 UNLESS NOTED.

| WIRE | GA | MATERIAL 1 | LG | TERMINALS | | | SERIALS |
|---|---|---|---|---|---|---|---|
| GREEN | 20 | -20-5 | | S-341-2 | S-1635-1 S-1637-1 | (STD) | (SR4839) & ON |
| GREEN | 20 | -20-5 | | S-341-2 | S-341-2 | (STD) | INACTIVE (SR4839) & ON |
| BLACK | 22 | -22-0 | | SOLDER | S-341-2 | | |
| TAN | 22 | -22-10 | | SOLDER | S-341-2 | | |
| WHT-BLK | 22 | -22-9-0 | | SOLDER | S-341-2 | | |
| BLU-WHT | 22 | -22-6-9 | | SOLDER | SOLDER | | |
| BLUE | 22 | -22-6 | | SOLDER | S-341-2 | | |
| BLACK | 22 | -22-0 | | SOLDER | S-1367-18 | | INACTIVE (SR4839) & ON |
| GRN | 20 | -20-5 | | SOLDER | S-341-2 | | INACTIVE (SR4839) & ON |

WIRE TABLE

| ITEM NO | PART NO. | DESCRIPTION | INSTALLED ON |
|---|---|---|---|
| 5 | 0770731-1 | SPEAKER ASSY | |
| 4 | | | |
| 3 | S-1102-1 | MICROPHONE JACK | |
| 2 | S-1103-1 | L. PHONE JACK | |
| 1 | 0770715-2 | SPEAKER | |

EQUIPMENT TABLE

CESSNA AIRCRAFT CO., COMMERCIAL AIRCRAFT DIVISION, WICHITA, KANSAS

| | NAME | DATE |
|---|---|---|
| DRAWN | HARDEN | 7-31-64 |
| GROUP | | |
| CHECK | R. Pluck | 11-13-64 |
| PROJ | A. Wine | 11-12-64 |

TITLE: WIRING DIAGRAM — SPEAKER, PHONE JACK & MICROPHONE JACK

Cessna.

DWG NO. 1570001

SUPERSEDED BY | SUPERSEDES | MODEL: 337 | REV: A | PAGE: 2.0.1

FORM NO. 80-161

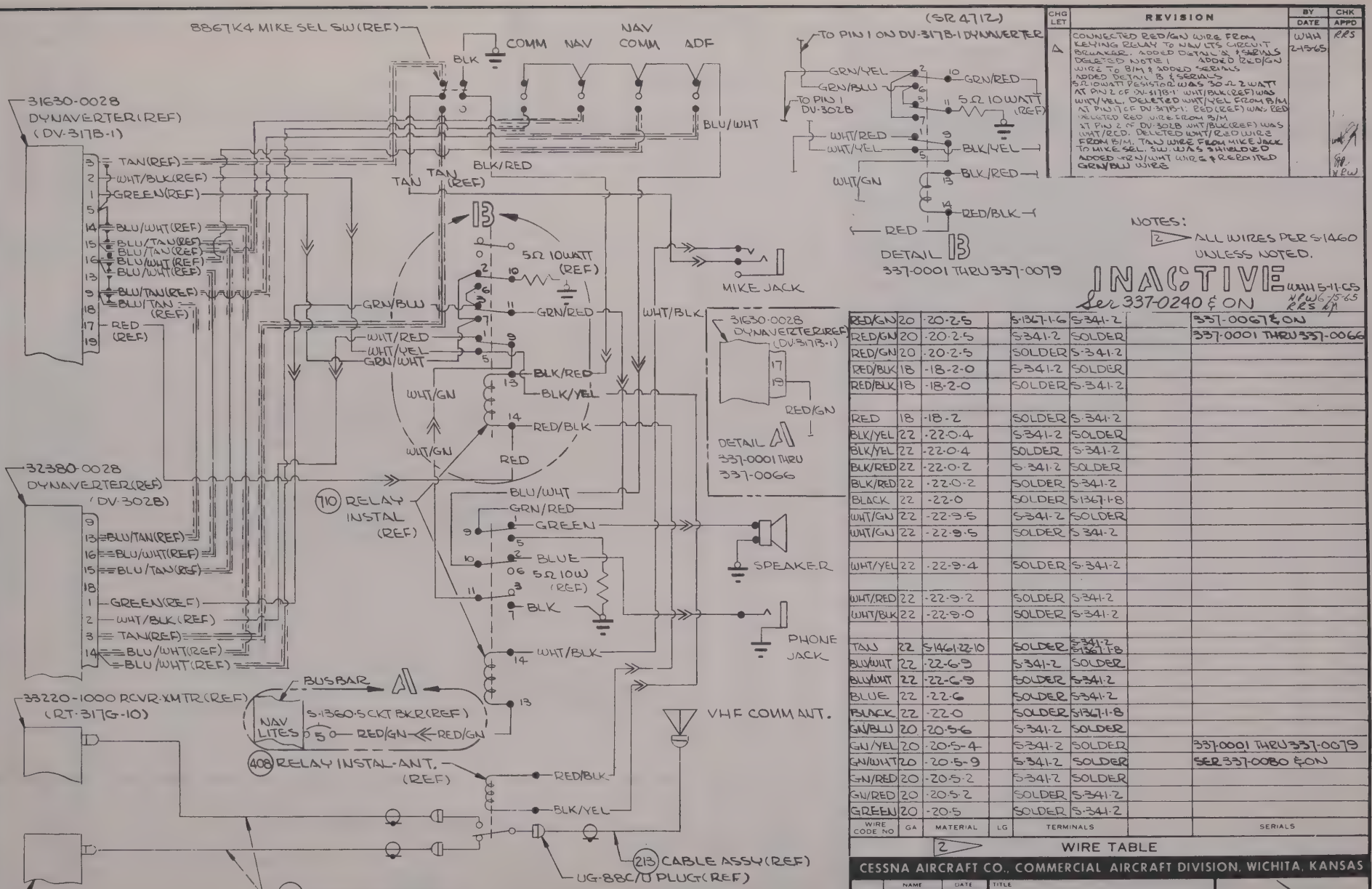


| CHG LET | REVISION | BY / DATE | CHK / APPD |
|---|---|---|---|
| A | CONNECTED RED/GN WIRE FROM KEYING RELAY TO NAV LTS CIRCUIT BREAKER. ADDED DETAIL A1 & SERIALS DELETED NOTE 1 ADDED RED/GN WIRE TO B/M & ADDED SERIALS ADDED DETAIL 13 & SERIALS 5Ω 10 WATT RESISTOR WAS 30Ω 2 WATT AT PIN 2 OF DV-317B-1 WHT/BLK (REF) WAS WHT/YEL. DELETED WHT/YEL FROM B/M AT PIN 1 OF DV-317B-1. RED (REF) WAS DELETED RED WIRE FROM B/M AT PIN 2 OF DV-302B WHT/BLK (REF) WAS WHT/RED. DELETED WHT/RED WIRE FROM B/M. TAN WIRE FROM MIKE JACK TO MIKE SEL. SW. WAS SHIELDED ADDED GRN/WHT WIRE & RE-ROUTED GRN/BLU WIRE | WHH 2-15-65 | RRS |

NOTES:
2. ALL WIRES PER S-1460 UNLESS NOTED.

INACTIVE WHH 5-11-65 per 337-0240 & ON HPW 6-15-65 RRS

| WIRE CODE NO | GA | MATERIAL | LG | TERMINALS | | SERIALS |
|---|---|---|---|---|---|---|
| RED/GN | 20 | -20-2-5 | | S-1367-1-6 | S-341-2 | 337-0067 & ON |
| RED/GN | 20 | -20-2-5 | | S-341-2 | SOLDER | 337-0001 THRU 337-0066 |
| RED/GN | 20 | -20-2-5 | | SOLDER | S-341-2 | |
| RED/BLK | 18 | -18-2-0 | | S-341-2 | SOLDER | |
| RED/BLK | 18 | -18-2-0 | | SOLDER | S-341-2 | |
| RED | 18 | -18-2 | | SOLDER | S-341-2 | |
| BLK/YEL | 22 | -22-0-4 | | S-341-2 | SOLDER | |
| BLK/YEL | 22 | -22-0-4 | | SOLDER | S-341-2 | |
| BLK/RED | 22 | -22-0-2 | | S-341-2 | SOLDER | |
| BLK/RED | 22 | -22-0-2 | | SOLDER | S-341-2 | |
| BLACK | 22 | -22-0 | | SOLDER | S-1367-1-8 | |
| WHT/GN | 22 | -22-9-5 | | S-341-2 | SOLDER | |
| WHT/GN | 22 | -22-9-5 | | SOLDER | S-341-2 | |
| WHT/YEL | 22 | -22-9-4 | | SOLDER | S-341-2 | |
| WHT/RED | 22 | -22-9-2 | | SOLDER | S-341-2 | |
| WHT/BLK | 22 | -22-9-0 | | SOLDER | S-341-2 | |
| TAN | 22 | S-1461-22-10 | | SOLDER | S-341-2 S-1367-1-8 | |
| BLU/WHT | 22 | -22-6-9 | | S-341-2 | SOLDER | |
| BLU/WHT | 22 | -22-6-9 | | SOLDER | S-341-2 | |
| BLUE | 22 | -22-6 | | SOLDER | S-341-2 | |
| BLACK | 22 | -22-0 | | SOLDER | S-1367-1-8 | |
| GN/BLU | 20 | -20-5-6 | | S-341-2 | SOLDER | |
| GN/YEL | 20 | -20-5-4 | | S-341-2 | SOLDER | 337-0001 THRU 337-0079 |
| GN/WHT | 20 | -20-5-9 | | S-341-2 | SOLDER | SER 337-0080 & ON |
| GN/RED | 20 | -20-5-2 | | S-341-2 | SOLDER | |
| GN/RED | 20 | -20-5-2 | | SOLDER | S-341-2 | |
| GREEN | 20 | -20-5 | | SOLDER | S-341-2 | |

2 WIRE TABLE

| ITEM NO | PART NO | DESCRIPTION | INSTALLED ON |
|---|---|---|---|

EQUIPMENT TABLE

CESSNA AIRCRAFT CO., COMMERCIAL AIRCRAFT DIVISION, WICHITA, KANSAS

| | NAME | DATE |
|---|---|---|
| DRAWN | HARDEN | 12-31-64 |
| GRP'S | | |
| CHECK | R. Stuck | 1-23-65 |
| PROJ | H. Wine | 12-31-64 |

TITLE: WIRING DIAGRAM — AUDIO SYSTEM - CESSNA 500 SERIES RADIOS

Cessna.

DWG NO. 1570001

| SUPERSEDED BY | DATED | SUPERSEDES | MODEL | REV. | PAGE |
|---|---|---|---|---|---|
| 1570001 | 2-41 | | 337 | A | 2.0.2 |

FORM NO. 80-161

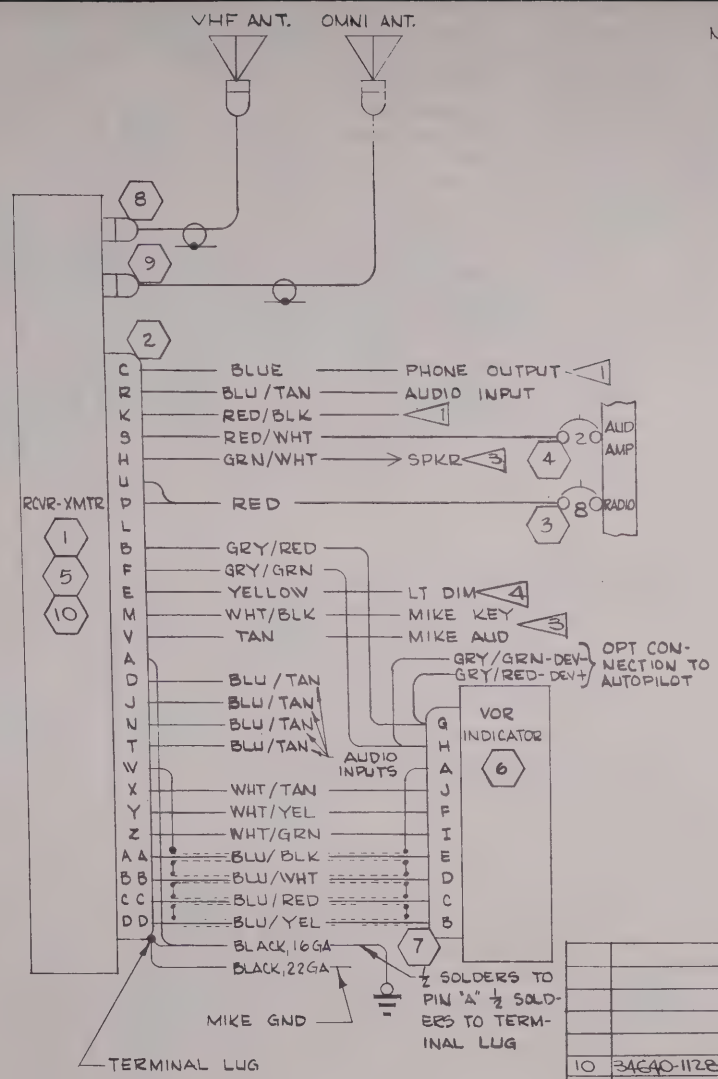


NOTES:

1. ON SINGLE NAV/COM 300 R INSTL, RED/BLK WIRE (PIN K) IS CONNECTED TO RED/WHT WIRE (PIN S) WITH AN S-1370-1 SPLICE AND BLUE WIRE (PIN C) IS CONNECTED TO PHONE JACK. ADD JUMPER WIRE BETWEEN PIN C & PIN R, D, J, N OR T. WHEN THE NAV/COM 300 R IS INSTALLED WITH OTHER RADIO UNITS, RED/WHT WIRE CONNECTS TO CKT BKR AS SHOWN & RED/BLK WIRE CONNECTS AS SHOWN ON NAV/COMM 300R AUDIO SYSTEM. BLUE WIRE CONNECTS TO WIPER OF A SPKR-PHONE SWITCH & BLU/TAN WIRE CONNECTS TO SPKR TERMINAL OF SPKR-PHONE SWITCH.
2. S-1557-1 CAPS TO BE REMOVED AS REQD WHEN BLU/TAN WIRES ARE REQD FOR AUDIO INPUTS.
3. REFER TO PAGE 2.0.1 FOR MIKE JACK, PHONE JACK, & SPKR CONNECTIONS ON SINGLE RADIO INSTL. REFER TO NAV/COMM 300 AUDIO SYSTEM FOR MIKE JACK, PHONE JACK & SPKR CONNECTIONS ON MULTIPLE RADIO INSTALLATION.
4. LIGHT DIM. WIRE CONNECTS TO FLOOD LT DIMMING RHEOSTAT WITH STANDARD LIGHTING. WHEN OPT. POST LIGHTING IS INSTALLED, CONNECT TO FLIGHT INSTR & RADIO DIAL LT DIMMING RHEOSTAT.

| CHG LET | REVISION | BY / DATE | CHK / APPD |
|---|---|---|---|
| A | ADDED ARC TYPE 515R TO TITLE BLOCK. ADDED 34640-1128 RCVR/XMTR TO FIELD & EQUIPMENT TABLE. IN NOTE 1: CHG WORDING TO READ "ON NAV/COMM 300R AUDIO SYSTEM" (WAS "ON PG'S 2.17.1 & 2.18.1") IN NOTE 3: CHG WORDING TO READ "REFER TO NAV/COMM 300R AUDIO SYSTEM" (WAS "REFER TO PAGES 2.17.1 & 2.18.1") (SR4812) | LWH 5-6-65 | RRS |

| WIRE CODE NO. | GA | MATERIAL | LG | TERMINALS | | | SERIALS |
|---|---|---|---|---|---|---|---|
| RED/WHT | 18 | -18-2-9 | | S-1367-1-6 | | | |
| BLU/YEL | 22S | S-1461-22-6-4 | | SOLDER | SOLDER | | |
| BLU/RED | 22S | S-1461-22-6-2 | | | | | |
| BLU/WHT | 22S | S-1461-22-6-9 | | | | | |
| BLU/BLK | 22S | S-1461-22-6-0 | | | | | |
| WHT/GRN | 22 | -22-9-5 | | | | | |
| WHT/YEL | 22 | -22-9-4 | | | | | |
| WHT/TAN | 22 | -22-9-10 | | | SOLDER | | |
| BLACK | 16 | -16-0 | | | S-1367-28 | | |
| WHT/BLK | 22 | -22-9-0 | | | | | |
| GRY/GRN | 22 | -22-8-5 | | | S-1557-1 | | |
| GRY/GRN | 22 | -22-8-5 | | | SOLDER | | |
| GRY/RED | 22 | -22-8-2 | | | S-1557-1 | | |
| GRY/RED | 22 | -22-8-2 | | | SOLDER | | |
| BLU/TAN | 22 | -22-6-10 | | | S-1557-1 | 2 | |
| BLU/TAN | 22 | -22-6-10 | | | | 2 | |
| BLU/TAN | 22 | -22-6-10 | | | | 2 | |
| BLU/TAN | 22 | -22-6-10 | | | | 2 | |
| BLU/TAN | 22 | -22-6-10 | | | S-1557-1 | 2 | |
| RED/WHT | 18 | -18-2-9 | | | S-1367-1-6 | | |
| RED/BLK | 18 | -18-2-0 | | | | | |
| BLACK | 22 | -22-0 | | | | | |
| TAN | 22 | -22-10 | | | | | |
| BLUE | 22 | -22-6 | | | | | |
| RED | 16 | -16-2 | | | S-1367-2-6 | | |
| YELLOW | 18 | -18-4 | | | | | |
| GRN/WHT | 20 | -20-5-9 | | SOLDER | S-341-2 | | |

WIRE TABLE

| ITEM NO. | PART NO. | DESCRIPTION | INSTALLED ON |
|---|---|---|---|
| 10 | 34640-1128 | RCVR/XMTR | (ARC TYPE RT-515R) |
| 9 | 29752 | CONNECTOR (ARC) | |
| 8 | 29753 | CONNECTOR (ARC) | |
| 7 | MS3106A18-1S | CONNECTOR | |
| 6 | 31640 | INDICATOR (ARC | TYPE IN514R) |
| 5 | 32580-1628 | RCVR/XMTR 360 CH EXP | (ARC TYPE RT-514R-1S) |
| 4 | S-1360-2 | CIRCUIT BREAKER | |
| 3 | S-1360-8 | CIRCUIT BREAKER | |
| 2 | 29747-0026 | CONNECTOR (ARC) | |
| 1 | 32580-1128 | RCVR/XMTR (360 CH) | (ARC TYPE RT-514R-11) |

EQUIPMENT TABLE

CESSNA AIRCRAFT CO., COMMERCIAL AIRCRAFT DIVISION, WICHITA, KANSAS

| | NAME | DATE |
|---|---|---|
| DRAWN | HARDEN | 11-12-64 |
| GROUP | | |
| CHECK | P. Stuck | 11-13-64 |
| PROJ | N. Wire | 11-12-64 |
| | | |

TITLE: WIRING DIAGRAM — CESSNA NAV/COM 300 R (ARC TYPE 514R & 515R)

Cessna.

DWG NO: 1570001

SUPERSEDED BY | SUPERSEDES PAGE | MODEL: 337 | REV: A | PAGE: 2 of 1

FORM NO. 80-161

| CHG LET | REVISION | BY / DATE | CHK / APPD |
|---|---|---|---|
| | | | |

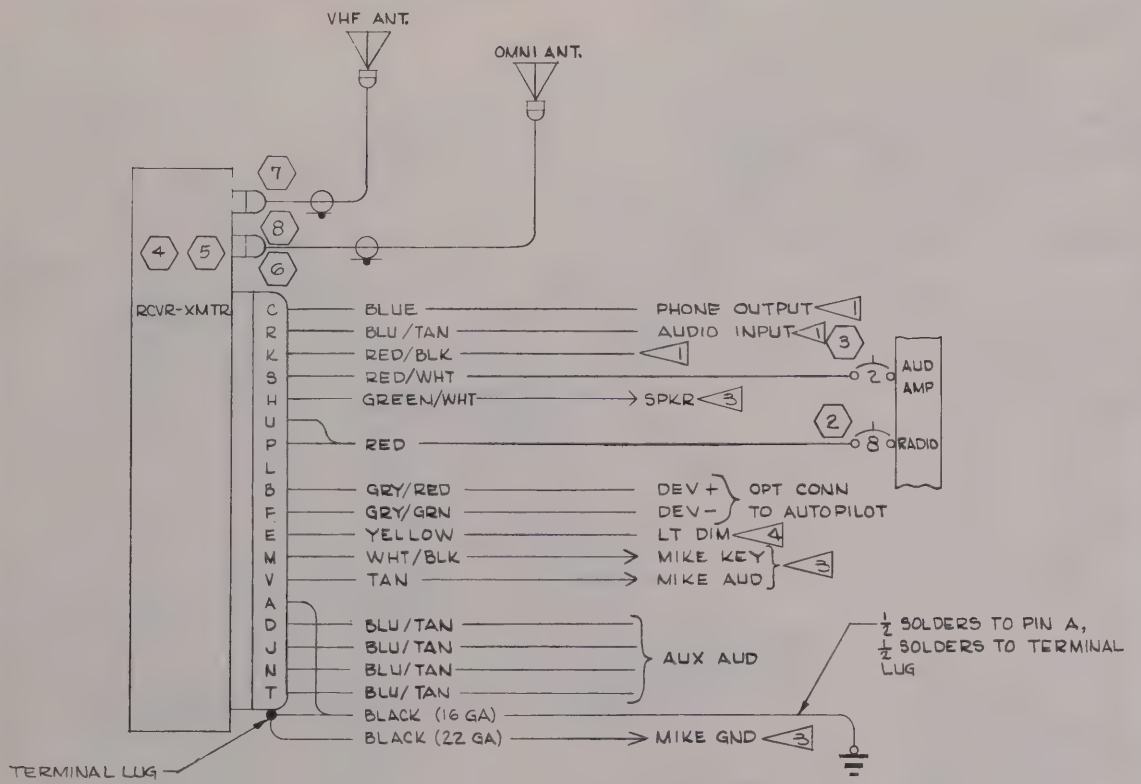


INACTIVE WHH 4-28-65 H&W 6-15-65 Ser 337-0240 & On RRS 1/1

NOTES:

1. ON SINGLE CESSNA NAV/COM 300 INSTL, RED/BLK WIRE (PIN K) IS CONNECTED TO RED/WHT WIRE (PIN S) WITH AN S-1370-1 SPLICE, AND BLUE WIRE (PIN C) IS CONNECTED TO PHONE JACK. ADD JUMPER WIRE BETWEEN PIN C & PIN R, D, J, N CRT.
   WHEN THE NAV/COM 300 IS INSTALLED WITH OTHER RADIO UNITS, RED/WHT WIRE CONNECTS TO CKT BKR AS SHOWN & RED/BLK WIRE CONNECTS AS SHOWN ON PG 2.17.1 & 2.18.1 BLUE WIRE CONNECTS TO WIPER OF A SPKR-PHONE SWITCH & BLU/TAN WIRE CONNECTS TO SPKR TERMINAL OF SPKR-PHONE SWITCH.
2. S-1557-1 CAP REPLACED WITH PROPER TERMINALS WHEN COMBINED WITH OTHER RADIOS. (REF PG 2.17.1 & 2.18.1)
3. REFER TO PAGE 2.0.1 FOR MIKE JACK, PHONE JACK & SPKR CONNECTIONS ON SINGLE RADIO INSTL. REFER TO PAGES 2.17.1 & 2.18.1. FOR MIKE JACK, PHONE JACK & SPKR CONNECTIONS ON MULTIPLE RADIO INSTL.
4. LIGHT DIM. WIRE CONNECTS TO FLOOD LT. DIMMING RHEOSTAT WITH STANDARD LIGHTING. WHEN OPT POST LIGHTING IS INSTALLED, CONNECT TO FLT INSTR & RADIO DIAL LT DIMMING RHEOSTAT

| ITEM NO | PART NO | DESCRIPTION | INSTALLED ON |
|---|---|---|---|
| 8 | 29752 | CONNECTOR (ARC) | |
| 7 | 29753 | CONNECTOR (ARC) | |
| 6 | 29747-0018 | CONNECTOR (ARC) | |
| 5 | 30410-1328 | RCVR-XMTR (360 CH) | (ARC TYPE RT-514A-13) |
| 4 | 30410-1228 | RCVR-XMTR (100 CH) | (ARC TYPE RT-514A-12) |
| 3 | S-1360-2 | CIRCUIT BREAKER | |
| 2 | S-1360-8 | CIRCUIT BREAKER | |
| 1 | | | |

EQUIPMENT TABLE

| WIRE CODE NO. | GA | MATERIAL | LG | TERMINALS | | | SERIALS |
|---|---|---|---|---|---|---|---|
| BLU/TAN | 22 | S-1460-22-6-10 | | SOLDER | S-1557-1 | 2 | |
| BLU/TAN | 22 | -22-6-10 | | | S-1557-1 | 2 | |
| BLU/TAN | 22 | -22-6-10 | | | S-1557-1 | 2 | |
| BLACK | 16 | -16-0 | | | S-1367-2-8 | | |
| WHT/BLK | 22 | -22-9-0 | | | S-341-2 | | |
| GRY/GRN | 22 | -22-8-5 | | | S-1557-1 | | |
| GRY/RED | 22 | -22-8-2 | | | S-1557-1 | | |
| BLU/TAN | 22 | -22-6-10 | | | S-1557-1 | 2 | |
| BLU/TAN | 22 | -22-6-10 | | | S-1557-1 | 2 | |
| RED/WHT | 18 | -18-2-9 | | | S-1367-1-6 | | |
| RED/BLK | 18 | -18-2-0 | | | | | |
| BLACK | 22 | -22-0 | | | S-341-2 | | |
| TAN | 22 | -22-10 | | | S-341-2 | | |
| BLUE | 22 | -22-6 | | | | | |
| RED | 16 | -16-2 | | | S-1367-2-6 | | |
| YELLOW | 20 | 20-4 | | | | | |
| GRN/WHT | 20 | S-1460-20-5-9 | | SOLDER | S-341-2 | | |

WIRE TABLE

CESSNA AIRCRAFT CO., COMMERCIAL AIRCRAFT DIVISION, WICHITA, KANSAS

| | NAME | DATE |
|---|---|---|
| DRAWN | BALES | 7-6-64 |
| GROUP | | |
| CHECK | R. Stuck | 2-7-64 |
| PROJ | H. Wise | 12-5-64 |

TITLE: WIRING DIAGRAM — CESSNA NAV/COM 300 (ARC TYPE 514A)

Cessna.

DWG NO 1570001

SUPERSEDED BY | SUPERSEDES | MODEL 337 | REV | PAGE 2.2.1

FORM NO. 80-161

EXCEPT AS NOTED.

2. GONIOMETER - INDICATOR & LOOP ANT. CONNECTIONS SHOWN ARE FOR BOTTOM - MOUNTED LOOP ANTENNA & TOP - MOUNTED SENSE ANTENNA.

3. LIGHT DIMMING WIRE CONNECTS TO FLOOD LT DIM RHEOSTAT WITH STD LIGHTING. WHEN OPT POST LT IS INSTL CONNECT TO FLIGHT INSTR & RADIO DIAL LT DIM. RHEOSTAT.

| | |
|---|---|
| ITEM 8, NOW TO PIN 'K' WAS 16 GA. NOW 22GA. ADDED ITEM 13 A-263 CHOKE; ADD RED WIRE | 11-a |

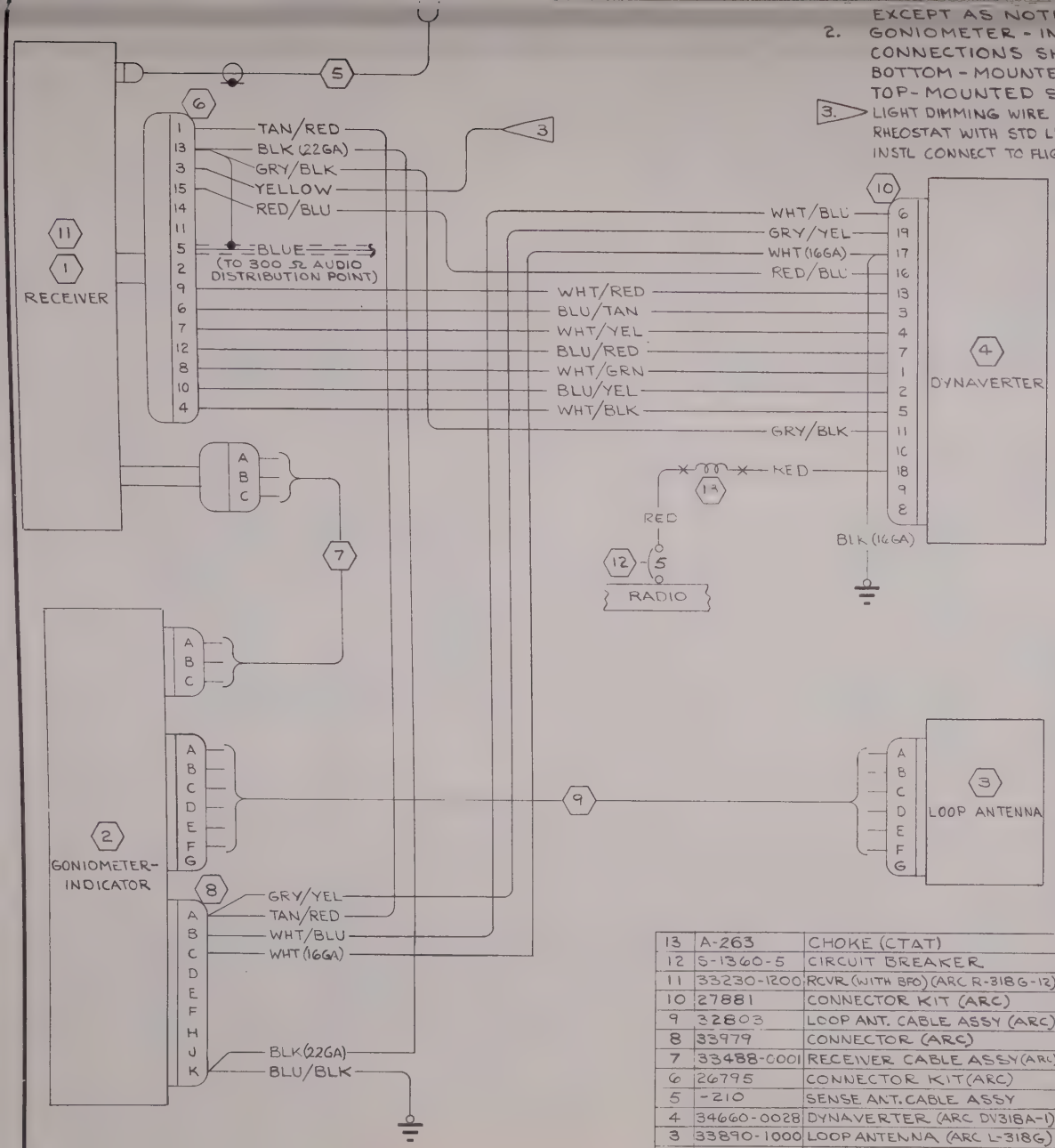


| WIRE CODE NO. | GA | MATERIAL | LG | TERMINALS | | SERIALS |
|---|---|---|---|---|---|---|
| RED | 16 | -16-2 | | S-1370-2 | S-1367-2-6 | |
| BLACK | 16 | -16-0 | | SOLDER | S-1367-2-8 | |
| RED | 16 | -16-2 | | | S-1370-2 | |
| WHT/BLK | 22 | -22-9-0 | | | SOLDER | |
| BLU/YEL | 22 | -22-6-4 | | | | |
| WHT/GRN | 22 | -22-9-5 | | | | |
| BLU/RED | 22 | -22-6-2 | | | | |
| WHT/YEL | 22 | -22-9-4 | | | | |
| BLU/TAN | 22 | -22-6-10 | | | | |
| WHT/RED | 22 | -22-9-2 | | | | |
| GRY/BLK | 22 | -22-8-0 | | | | |
| RED/BLU | 16 | -16-2-6 | | | SOLDER | |
| YELLOW | 20 | -20-4 | | | | |
| BLUE | 22S | S-1461-22-6 | | | | |
| GRY/YEL | 22 | -22-8-4 | | | SOLDER | |
| TAN/RED | 22 | -22-10-2 | | | | |
| WHT/BLU | 22 | -22-9-6 | | | | |
| BLACK | 22 | -22-0 | | | | |
| WHITE | 16 | -16-9 | | | SOLDER | |
| BLU/BLK | 22 | -22-6-0 | | SOLDER | S-1367-1-8 | |

1 WIRE TABLE

| ITEM NO | PART NO. | DESCRIPTION | INSTALLED ON |
|---|---|---|---|
| 13 | A-263 | CHOKE (CTAT) | |
| 12 | S-1360-5 | CIRCUIT BREAKER | |
| 11 | 33230-1200 | RCVR (WITH BFO) (ARC R-318G-12) | |
| 10 | 27881 | CONNECTOR KIT (ARC) | |
| 9 | 32803 | LOOP ANT. CABLE ASSY (ARC) | |
| 8 | 33979 | CONNECTOR (ARC) | |
| 7 | 33488-0001 | RECEIVER CABLE ASSY (ARC) | |
| 6 | 26795 | CONNECTOR KIT (ARC) | |
| 5 | -210 | SENSE ANT. CABLE ASSY | |
| 4 | 34660-0028 | DYNAVERTER (ARC DV318A-1) | |
| 3 | 33890-1000 | LOOP ANTENNA (ARC L-318G) | |
| 2 | 33550 | GONIOMETER - INDICATOR (ARC IN-216) | |
| 1 | 33230-1000 | RECEIVER (ARC R-318G-10) | |

EQUIPMENT TABLE

CESSNA AIRCRAFT CO., COMMERCIAL AIRCRAFT DIVISION, WICHITA, KANSAS

| | NAME | DATE |
|---|---|---|
| DRAWN | RIDDER | 4-3-65 |
| GROUP | H. Wise | 5-19-65 |
| CHECK | | 5-17-65 |
| PROJ | | 5-21-65 |

TITLE: WIRING DIAGRAM— CESSNA ADF 500 (GONIOMETER) (ARC TYPE 318G)

Cessna

DWG NO: 1570001

SUPERSEDED BY:

SUPERSEDES: PP 1570001 2.9.1

MODEL: 337

REV: A

PAGE: 2.3.1

FORM NO 80-161A

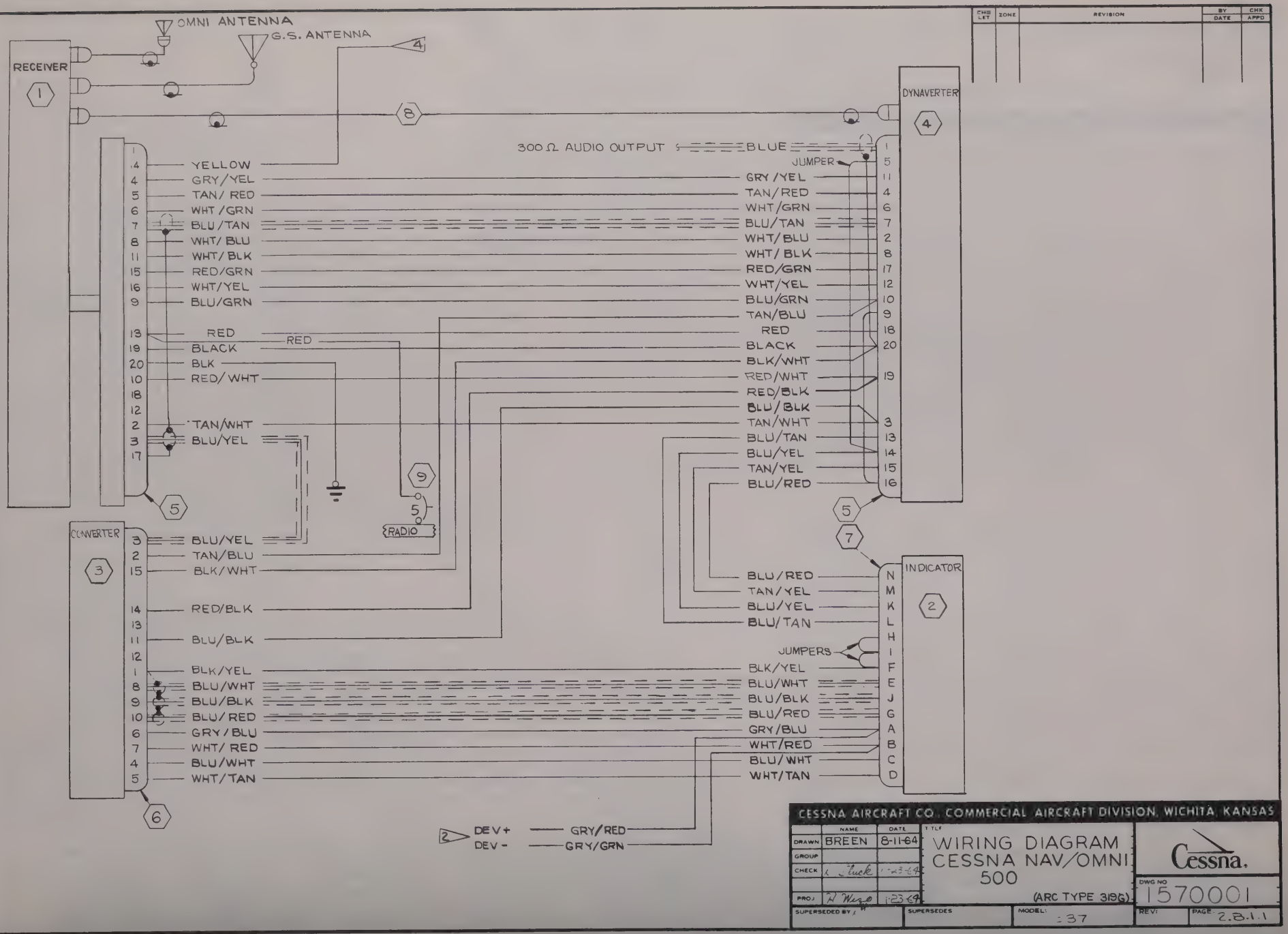


| CHG LET | ZONE | REVISION | BY / DATE | CHK / APPD |
|---|---|---|---|---|
| | | | | |

CESSNA AIRCRAFT CO. COMMERCIAL AIRCRAFT DIVISION, WICHITA, KANSAS

| | NAME | DATE |
|---|---|---|
| DRAWN | BREEN | 8-11-64 |
| GROUP | | |
| CHECK | J. Tuck | 1-23-64 |
| PROJ | W Wize | 1-23-69 |

TITLE: WIRING DIAGRAM CESSNA NAV/OMNI 500 (ARC TYPE 319G)

Cessna.

DWG NO 1570001

SUPERSEDED BY / SUPERSEDES / MODEL: 337 / REV: / PAGE 2.8.1.1

| CHG LET | REVISION | BY / DATE | CHK / APPD |
|---|---|---|---|
| | | | |

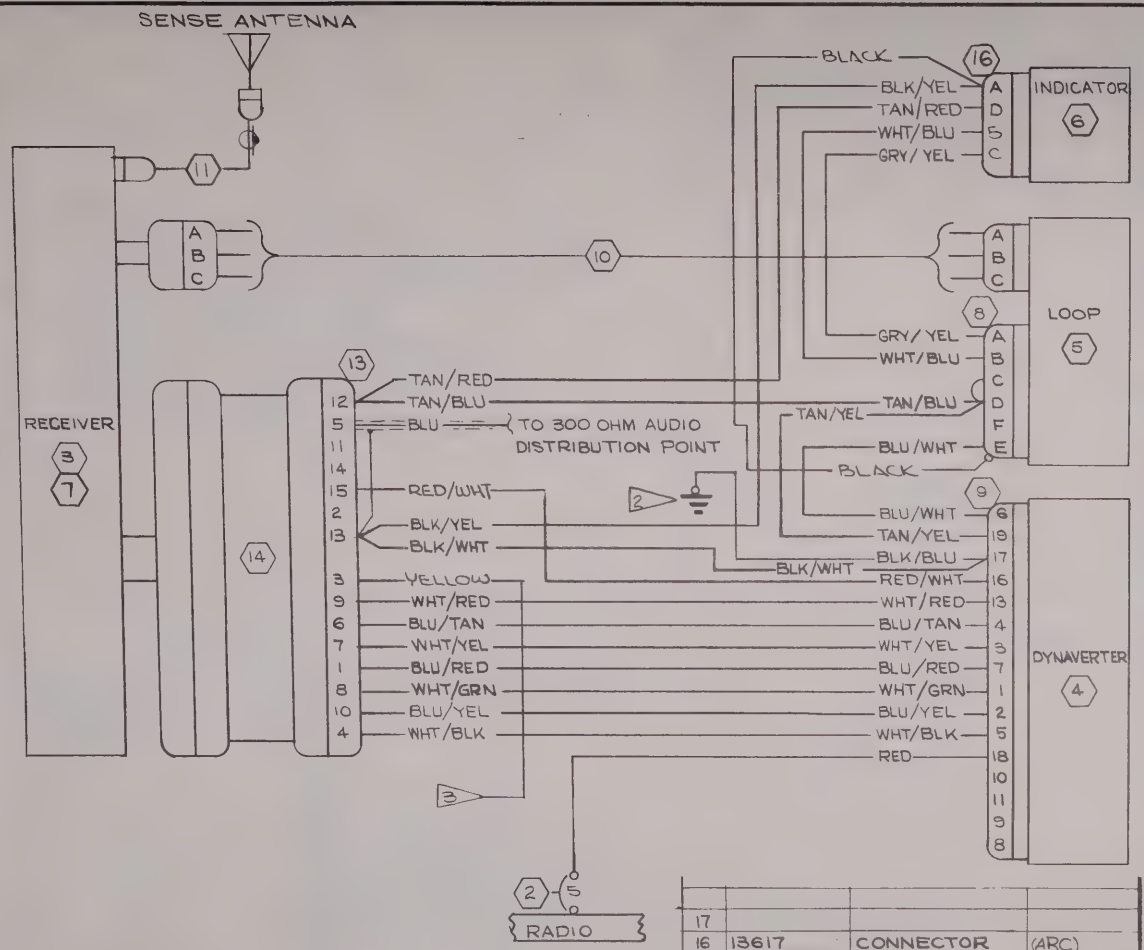


Inactive EFF THRU SER 337-0240
W. J. R. 4-28-65
H. L. W. 5-14-65
RRS 5-17-65
NS 5-19-65

NOTES:

1. INDICATOR & LOOP CONNECTIONS SHOWN ARE FOR BOTTOM LOOP & TOP SENSE ANT.
2. BLK/BLU WIRE TO BE GROUNDED TO AIRFRAME NEAR LOOP BUT NOT CONNECTED TO LOOP.
3. LIGHT DIMMING WIRE CONNECTS TO FLOOD LT DIMMING RHEOSTAT WITH STANDARD LIGHTING. WHEN OPT. POST LIGHTING IS INSTALLED, CONNECT TO FLIGHT INSTR & RADIO DIAL LIGHT DIMMING RHEOSTAT.
4. WIRE MATERIAL PER S-1460 EXCEPT AS SHOWN.

| ITEM NO | PART NO. | DESCRIPTION | INSTALLED ON |
|---|---|---|---|
| 17 | | | |
| 16 | 13617 | CONNECTOR | (ARC) |
| 15 | | | |
| 14 | 27859 | FILTER ASSY | (ARC) |
| 13 | 26795 | CONNECTOR | (ARC) |
| 12 | | | |
| 11 | -210 | SENSE ANT. CABLE | |
| 10 | 17985 | LOOP CABLE ASSY | (ARC) |
| 9 | 27881 | CONNECTOR | (ARC) |
| 8 | 19062 | CONNECTOR | (ARC) |
| 7 | 33230-1000 | RCVR WITHOUT BFO | ARC TYPE R-318G-10 |
| 6 | 27500 | INDICATOR | ARC TYPE IN-318A-1 |
| 5 | 18000 | LOOP | (ARC TYPE L-11) |
| 4 | 26960-0028 | DYNAVERTER | ARC TYPE DV-318A |
| 3 | 33230-1200 | RECEIVER WITH BFO | (ARC TYPE R-318G-12 |
| 2 | S-1360-5 | CIRCUIT BREAKER | |
| 1 | | | |

EQUIPMENT TABLE

| WIRE CODE NO. | GA | MATERIAL | LG | TERMINALS | | | SERIALS |
|---|---|---|---|---|---|---|---|
| BLACK | 22 | -22-0 | | S-1367-1-6 | SOLDER | | |
| YELLOW | 20 | -20-4 | | | SOLDER | | |
| BLUE | 22S | S-1461-22-6 | | | | | |
| BLK/WHT | 18 | -18-0-9 | | SOLDER | | | |
| TAN/RED | 22 | -22-10-2 | | | | | |
| BLK/YEL | 22 | -22-0-4 | | | | | |
| GRY/YEL | 22 | -22-8-4 | | | | | |
| WHT/BLU | 22 | -22-9-6 | | | | | |
| TAN/BLU | 22 | -22-10-6 | | SOLDER | | | |
| RED | 18 | -18-2 | | S-1367-1-6 | | | |
| WHT/BLK | 22 | -22-9-0 | | SOLDER | | | |
| BLU/YEL | 22 | -22-6-4 | | | | | |
| WHT/GRN | 22 | -22-9-5 | | | | | |
| BLU/RED | 22 | -22-6-2 | | | | | |
| WHT/YEL | 22 | -22-9-4 | | | | | |
| BLU/TAN | 22 | -22-6-10 | | | | | |
| WHT/RED | 22 | -22-9-2 | | | | | |
| RED/WHT | 18 | -18-2-9 | | | SOLDER | | |
| BLK/BLU | 22 | -22-0-6 | | | S-1367-1-8 | | |
| TAN/YEL | 22 | -22-10-4 | | | SOLDER | | |
| BLU/WHT | 22 | -22-6-9 | | SOLDER | SOLDER | | |

4 WIRE TABLE

CESSNA AIRCRAFT CO., COMMERCIAL AIRCRAFT DIVISION, WICHITA, KANSAS

| | NAME | DATE |
|---|---|---|
| DRAWN | BREEN | 8-10-64 |
| GROUP | | |
| CHECK | R. Stuck | 12-7-64 |
| PROJ | H. Wire | 12-9-64 |

TITLE: WIRING DIAGRAM — CESSNA ADF 500 (ARC TYPE 318G)

Cessna.

DWG NO. 1570001

SUPERSEDED BY 1570001 11 PP 2.3.1 | SUPERSEDES | MODEL 337 | REV: | PAGE: 2.9.1

FORM NO. 80-161

| CHG LET | REVISION | BY / DATE | CHK / APPD |
|---|---|---|---|
| A | YELLOW WIRE CONNECTED TO PIN 14 AT REC/XMTR (WAS CONNECTED TO PIN 1) RED/BLK WIRE CONNECTED TO PIN 10 AT REC/XMTR (WAS CONNECTED TO PIN 12) REMOVED JUMPER BETWEEN PINS 20 & 10 AT REC/XMTR. ITEM 5 WAS S-1360-15 CHANGED TO S-1360-5. DELETED ITEM 6 CHANGE GAUGE OF "RED" AT WIRE FROM 16 GAUGE TO 18 GAUGE CHANGED TERM ON RED WIRE FROM S-1367-2-6 TO S-1367-1-6 | WHH 11-10-64 | RRS HRW |

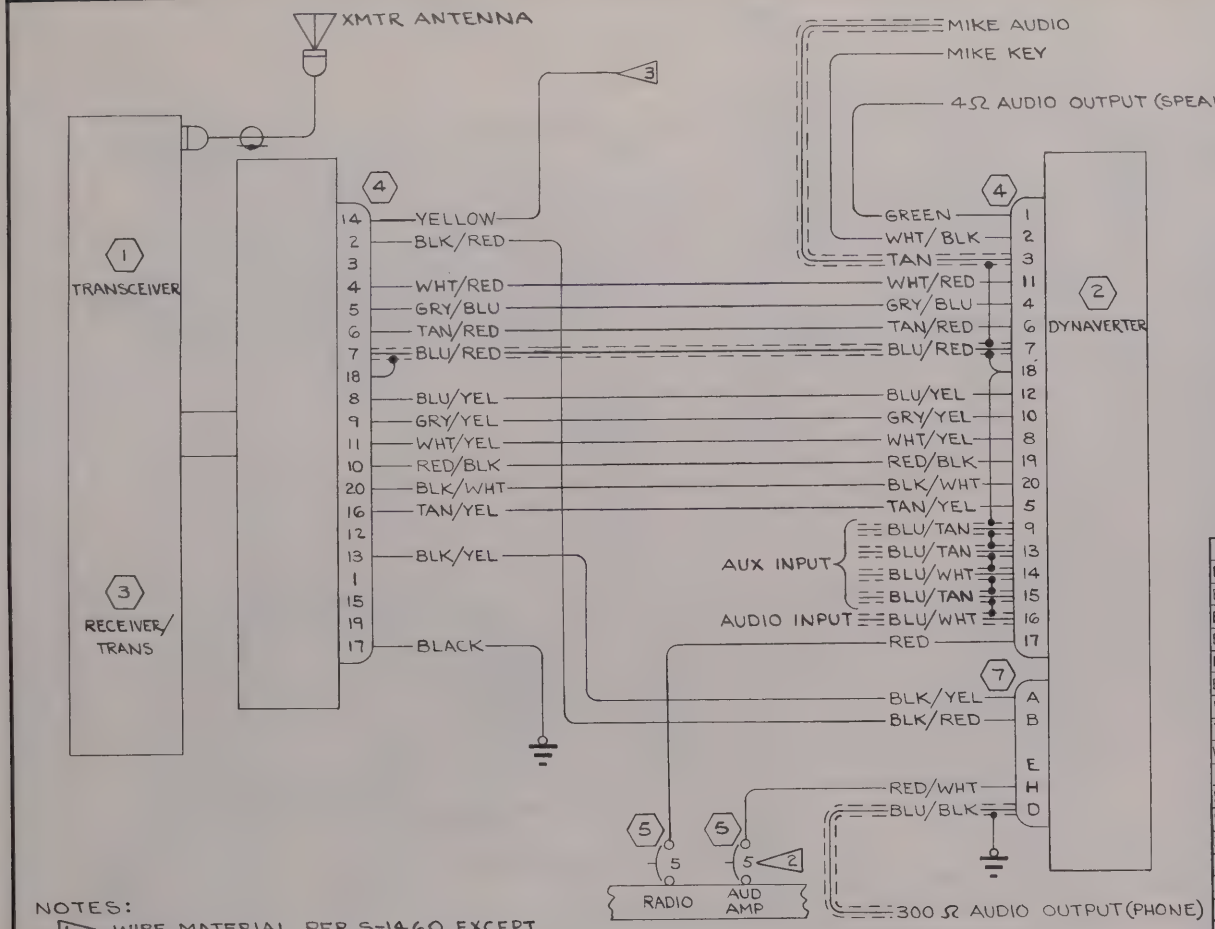


NOTES:

1. WIRE MATERIAL PER S-1460 EXCEPT FOR SHIELDED WIRE.
2. RED/WHT WIRE (ISO-AMP POWER) MAY BE CONNECTED TO A DIFFERENT BREAKER WHEN THIS SYSTEM IS COMBINED WITH OTHER 500 SERIES RADIOS.
3. LIGHT DIM WIRE CONNECTS TO FLOOD LIGHT DIMMING RHEOSTAT WITH STANDARD LIGHTING. WHEN OPT. POST LIGHTING IS INSTALLED, CONNECT TO FLIGHT INSTR. & RADIO DIAL LIGHT DIMMING RHEOSTAT.

| WIRE CODE NO. | GA | MATERIAL | LG | TERMINALS | | | SERIALS |
|---|---|---|---|---|---|---|---|
| BLACK | 16 | -16-0 | | SOLDER | S-1367-2-8 | | |
| RED/WHT | 18 | -18-2-9 | | | S-1367-1-6 | | |
| BLU/BLK | 22S | S-1461-22-6-0 | | | | | |
| BLU/WHT | 22S | S-1461-22-6-9 | | | | | |
| BLU/WHT | 22S | S-1461-22-6-9 | | | | | |
| BLU/TAN | 22S | S-1461-22-6-10 | | | | | |
| BLU/TAN | 22S | S-1461-22-6-10 | | | | | |
| BLU/TAN | 22S | S-1461-22-6-10 | | | | | |
| TAN | 22S | S-1461-22-10 | | | | | |
| WHT/BLK | 22 | -22-9-0 | | | | | |
| GREEN | 20 | -20-5 | | | | | |
| BLK/WHT | 18 | -18-0-9 | | | SOLDER | | |
| RED/BLK | 18 | -18-2-0 | | | | | |
| BLU/YEL | 22 | -22-6-4 | | | | | |
| BLU/RED | 22S | S-1461-22-6-2 | | | | | |
| TAN/YEL | 22 | -22-10-4 | | | | | |
| TAN/RED | 22 | -22-10-2 | | | | | |
| GRY/YEL | 22 | -22-8-4 | | | | | |
| GRY/BLU | 22 | -22-8-6 | | | | | |
| WHT/YEL | 22 | -22-9-4 | | | | | |
| WHT/RED | 22 | -22-9-2 | | | | | |
| BLK/YEL | 22 | -22-0-4 | | | | | |
| BLK/RED | 22 | -22-0-2 | | | SOLDER | | |
| YELLOW | 18 | -18-4 | | | | | |
| RED | 18 | -18-2 | | SOLDER | S-1367-1-6 | | |

1 WIRE TABLE

| ITEM NO | PART NO. | DESCRIPTION | INSTALLED ON |
|---|---|---|---|
| 7 | 28371-0005 | PLUG (ARC) | |
| 6 | | | |
| 5 | S-1360-5 | CIRCUIT BREAKER | |
| 4 | 28808 | PLUG (ARC) | |
| 3 | 33580-1000 | RECEIVER/XMTR (ARC TYPE RT-302H) | |
| 2 | 32380-0028 | DYNAVERTER (ARC TYPE DV-302B) | |
| 1 | 33200-1000 | TRANSCEIVER (ARC TYPE RT-3026-10) | |

EQUIPMENT TABLE

CESSNA AIRCRAFT CO., COMMERCIAL AIRCRAFT DIVISION, WICHITA, KANSAS

| | NAME | DATE |
|---|---|---|
| DRAW | BREEN | 10-22-64 |
| GROUP | | |
| CHECK | R. Stick | 10-22-64 |
| PROJ | H. Wise | 10-22-64 |

TITLE: WIRING DIAGRAM — CESSNA TRANSCEIVER 500 (ARC TYPE 3026)

Cessna.

DWG NO. 1570001

SUPERSEDED BY | SUPERSEDES | MODEL 337 | REV A | PAGE 2.14.1

FORM NO. 80-161

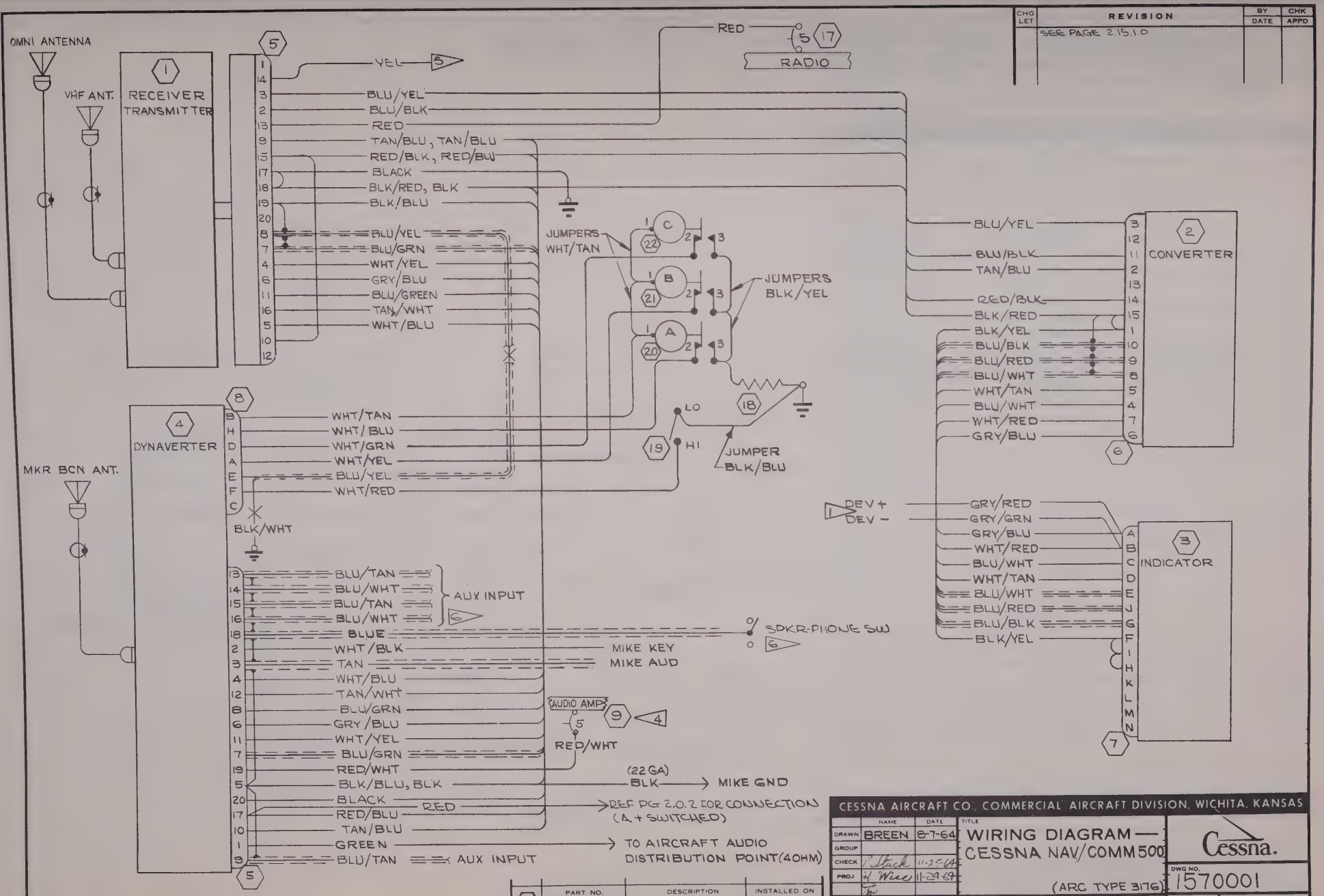


| CHG LET | REVISION | BY / DATE | CHK / APPD |
|---|---|---|---|
| | SEE PAGE 2.15.1.0 | | |

| TEM NO | PART NO. | DESCRIPTION | INSTALLED ON |
|---|---|---|---|
| | EQUIPMENT TABLE | | |

CESSNA AIRCRAFT CO., COMMERCIAL AIRCRAFT DIVISION, WICHITA, KANSAS

| | NAME | DATE |
|---|---|---|
| DRAWN | BREEN | 8-7-64 |
| GROUP | | |
| CHECK | P. Stuck | 11-25-64 |
| PROJ | H. Wiese | 11-29-64 |

TITLE: WIRING DIAGRAM — CESSNA NAV/COMM 500 (ARC TYPE 317G)

Cessna.

DWG NO. 1570001

| SUPERSEDED BY | SUPERSEDES | MODEL: | REV. | PAGE: |
|---|---|---|---|---|
| | | 337 | A | 2.15.1.1 |

FORM NO. 80-161

| CHG LET | REVISION | BY / DATE | CHK / APPD |
|---|---|---|---|
| A | ADDED DETAIL "A" & SERIALS ADDED WHT/GRN, GRN/RED & RED/GRN WIRES TO B/M WITH SERIALS. SERIALIZED OUT RED/WHT & GRN/WHT WIRES IN B/M INACTIVATED DWG (SR4697) | WHH 4-22-65 | RRS |

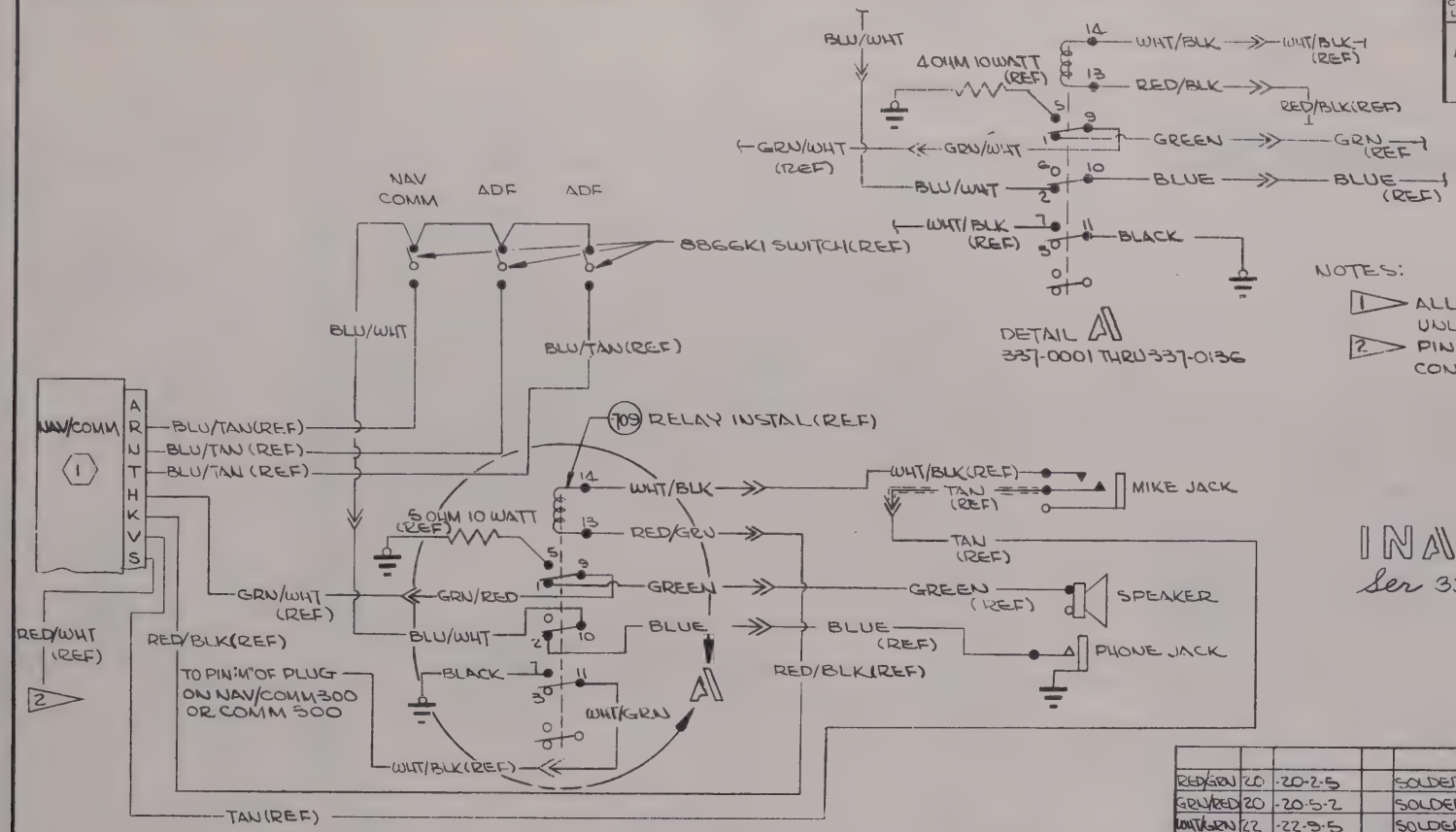


NOTES:

1. ALL WIRES PER S-1460 UNLESS NOTED
2. PIN "S" ON NAV/COMM TO BE CONNECTED TO AUDIO AMP CKT. BKR.

INACTIVE WHH 5-25-65 HLW 6-15-65 RRS
Ser 337-0240 & ON

| WIRE CODE NO. | GA | MATERIAL | LG | TERMINALS | | | SERIALS |
|---|---|---|---|---|---|---|---|
| RED/GRN | 20 | -20-2-5 | | SOLDER | S-341-2 | | 337-0137 & ON |
| GRN/RED | 20 | -20-5-2 | | SOLDER | S-341-2 | | 337-0137 & ON |
| WHT/GRN | 22 | -22-9-5 | | SOLDER | S-341-2 | | 337-0137 & ON |
| BLACK | 22 | -22-0 | | SOLDER | S1367-1-8 | | |
| GREEN | 20 | -20-5 | | SOLDER | S-341-2 | | |
| GRN/WHT | 20 | -20-5-9 | | S-341-2 | SOLDER | | 337-0001 THRU 337-0136 |
| RED/BLK | 22 | -22-2-0 | | S-341-2 | SOLDER | | |
| RED/BLK | 22 | -22-2-0 | | SOLDER | S-341-2 | | 337-0001 THRU 337-0136 |
| WHT/BLK | 22 | -22-9 | | S-341-2 | SOLDER | | |
| BLUE | 22 | -22-6 | | SOLDER | S-341-2 | | |
| BLU/WHT | 22 | -22-6-9 | | S-341-2 | SOLDER | | |
| BLU/WHT | 22 | -22-6-9 | | SOLDER | S-341-2 | | |

1 WIRE TABLE

CESSNA AIRCRAFT CO. COMMERCIAL AIRCRAFT DIVISION, WICHITA, KANSAS

| | NAME | DATE |
|---|---|---|
| DRAWN | HARDEN | 10-26-64 |
| GROUP | | |
| CHECK | R. Stuck | 11-13-64 |
| PROJ | H. Wise | 11-12-64 |

TITLE: WIRING DIAGRAM — AUDIO SYSTEM-SINGLE NAV/COMM 300, COMM 300 (ARC TYPE 514A, 514R, 524A)

Cessna.

DWG NO. 1570001

| ITEM NO | PART NO. | DESCRIPTION | INSTALLED ON |
|---|---|---|---|
| | EQUIPMENT TABLE | | |

SUPERSEDED BY 1570001 PG 250 | SUPERSEDES | MODEL 337 | REV: A | PAGE: 2.17.1

FORM NO. 80-161

| CHG LET | REVISION | BY / DATE | CHK / APPD |
|---|---|---|---|
| A | CONNECTED RED/GN WIRE FROM KEYING RELAY TO NAV LITE CIRCUIT BREAKER. ADDED DETAIL "A" & SERIALS. ADDED RED/GN WIRE TO B/M & ADD SERIALS | WHH 2-18-65 | RPS |

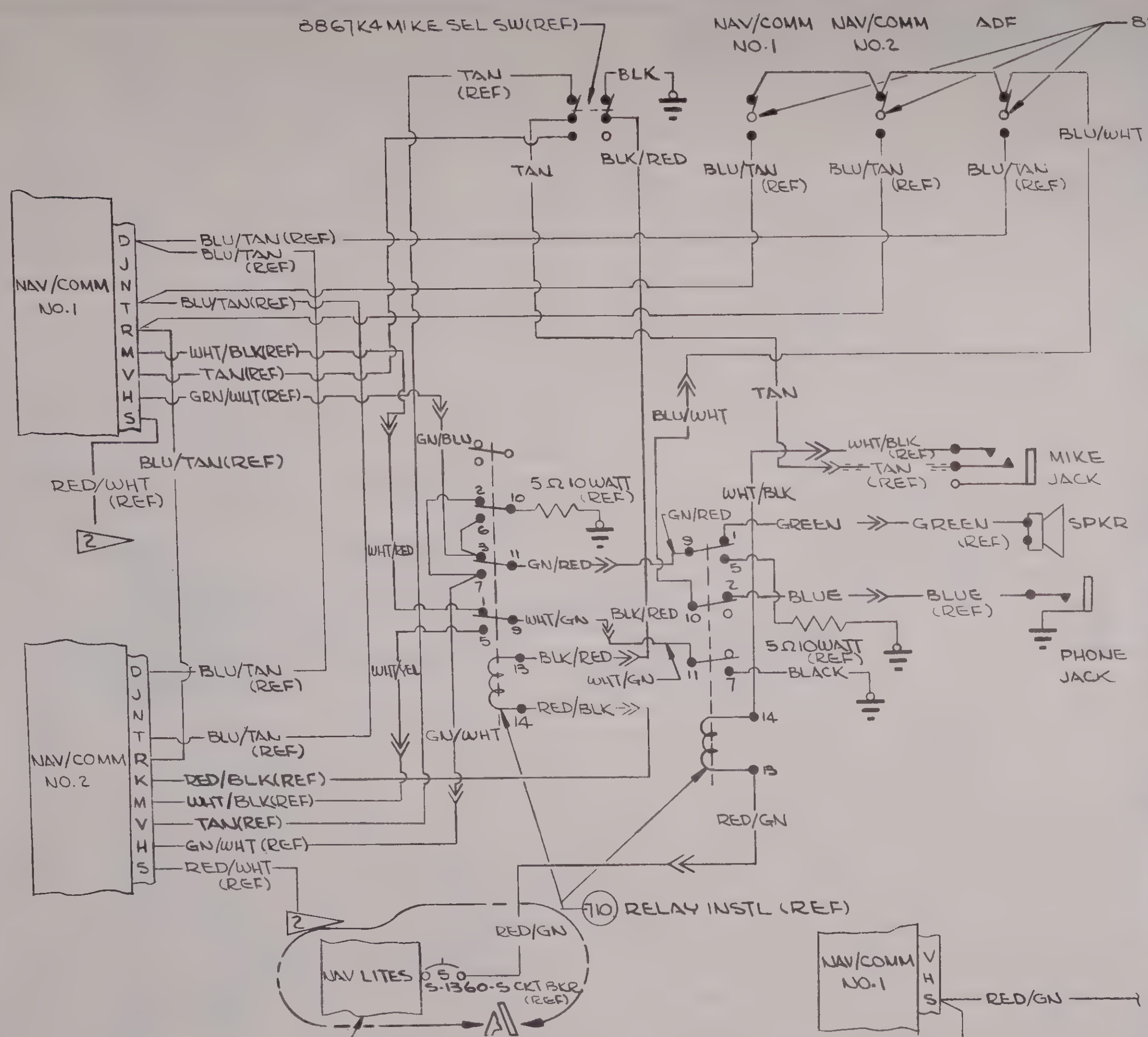


DETAIL A
337-0001 THRU 337-0073

NOTES:

1. WIRE MATERIAL PER S-1460 UNLESS NOTED.
2. PIN "S" ON NO.1 NAV/COMM TO BE CONNECTED TO AUDIO AMP CKT. BKR. PIN "S" ON NO.2 NAV/COMM TO BE CONNECTED TO NO.2 NAV/COMM CKT BKR.

INACTIVE
ser 337-0240 & on
WHH 5-5-65
RPS

| WIRE CODE NO. | GA | MATERIAL | LG | TERMINALS | | | SERIALS |
|---|---|---|---|---|---|---|---|
| RED/GN | 20 | -20-2-5 | | S-341-2 | S1367-1-6 | | 337-0074 & ON |
| TAN | 22 | -22-10 | | S-341-2 | SOLDER | | |
| BLU/WHT | 22 | -22-6-9 | | S-341-2 | SOLDER | | |
| BLU/WHT | 22 | -22-6-9 | | SOLDER | S-341-2 | | |
| BLUE | 22 | -22-6 | | S-341-2 | SOLDER | | |
| RED/GN | 20 | -20-2-5 | | S-341-2 | SOLDER | | 337-0001 THRU 337-0073 |
| RED/GN | 20 | -20-2-5 | | SOLDER | S-341-2 | | |
| WHT/GN | 22 | -22-9-5 | | S-341-2 | SOLDER | | |
| WHT/GN | 22 | -22-9-5 | | SOLDER | S-341-2 | | |
| WHT/YEL | 22 | -22-9-4 | | S-341-2 | SOLDER | | |
| WHT/RED | 22 | -22-9-2 | | S-341-2 | SOLDER | | |
| WHT/BLK | 22 | -22-9-0 | | S-341-2 | SOLDER | | |
| RED/BLK | 22 | -22-2-0 | | S-341-2 | SOLDER | | |
| BLK/RED | 22 | -22-0-2 | | S-341-2 | SOLDER | | |
| BLK/RED | 22 | -22-0-2 | | SOLDER | S-341-2 | | |
| BLACK | 22 | -22-0 | | SOLDER | S1367-1-8 | | |
| BLACK | 22 | -22-0 | | SOLDER | S1367-1-8 | | |
| GN/WHT | 20 | -20-5-9 | | S-341-2 | SOLDER | | |
| GREEN | 20 | -20-5 | | SOLDER | S-341-2 | | |
| GN/RED | 20 | -20-5-2 | | S-341-2 | SOLDER | | |
| GN/RED | 20 | -20-5-2 | | SOLDER | S-341-2 | | |
| GN/BLU | 20 | -20-5-6 | | S-341-2 | SOLDER | | |

1 WIRE TABLE

| ITEM NO | PART NO. | DESCRIPTION | INSTALLED ON |
|---|---|---|---|

EQUIPMENT TABLE

CESSNA AIRCRAFT CO., COMMERCIAL AIRCRAFT DIVISION, WICHITA, KANSAS

| | NAME | DATE |
|---|---|---|
| DRAWN | HARDEN | 10-29-64 |
| GROUP | | |
| CHECK | R. Stuck | 11-14-64 |
| PROJ | J. Wise | 11-12-64 |

TITLE: WIRING DIAGRAM — AUDIO SYSTEM-DUAL NAV/COMM 300 & COM 300 (ARC TYPE 514A, 514R & 524A)

Cessna.

DWG NO. 1570001

SUPERSEDED BY: 1570001 PAGE 2.47 | SUPERSEDES: | MODEL: 337 | REV: A | PAGE: 2.18.1

FORM NO. 80-161

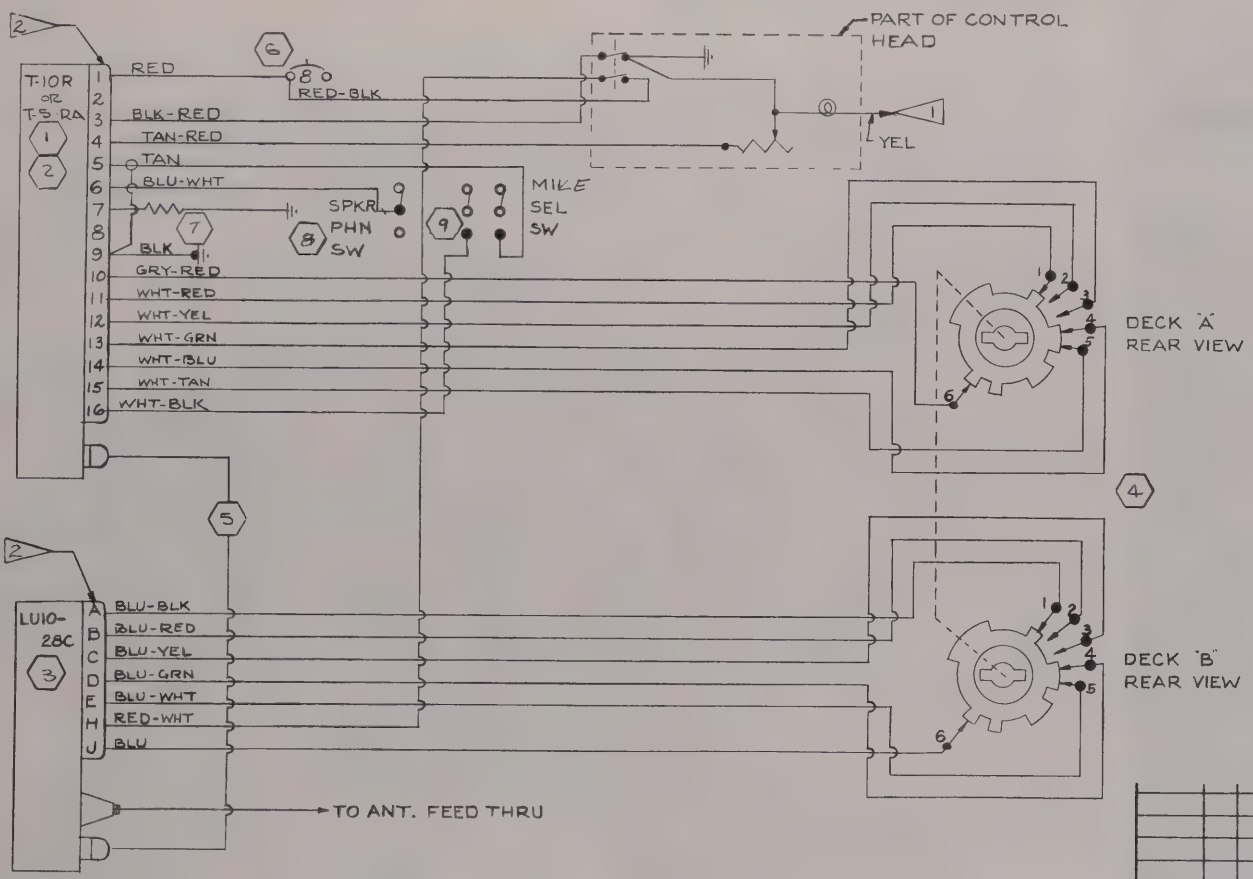


| CHG LET | REVISION | BY / DATE | CHK / APPD |
|---|---|---|---|
| | | | |

Inactive
3-15-65
3-15-65
337-0240 & ON
RRS

| WIRE CODE NO. | GA | MATERIAL | LG | TERMINALS | | SERIALS |
|---|---|---|---|---|---|---|

WIRE TABLE

CESSNA AIRCRAFT CO. COMMERCIAL AIRCRAFT DIVISION, WICHITA, KANSAS

| | NAME | DATE |
|---|---|---|
| DRAWN | ACKERSON | 2-5-65 |
| GROUP | | |
| CHECK | R. Stuck | 2-16-65 |
| PROJ | H. Wise | 2-8-65 |

TITLE: WIRING DIAGRAM — SUNAIR T-10R & T-5-RA H. F.

Cessna.

DWG NO: 1570001

SUPERSEDED BY | SUPERSEDES | MODEL: 337 | REV. | PAGE: 2.19.2

| ITEM NO | PART NO. | DESCRIPTION | INSTALLED ON |
|---|---|---|---|

EQUIPMENT TABLE

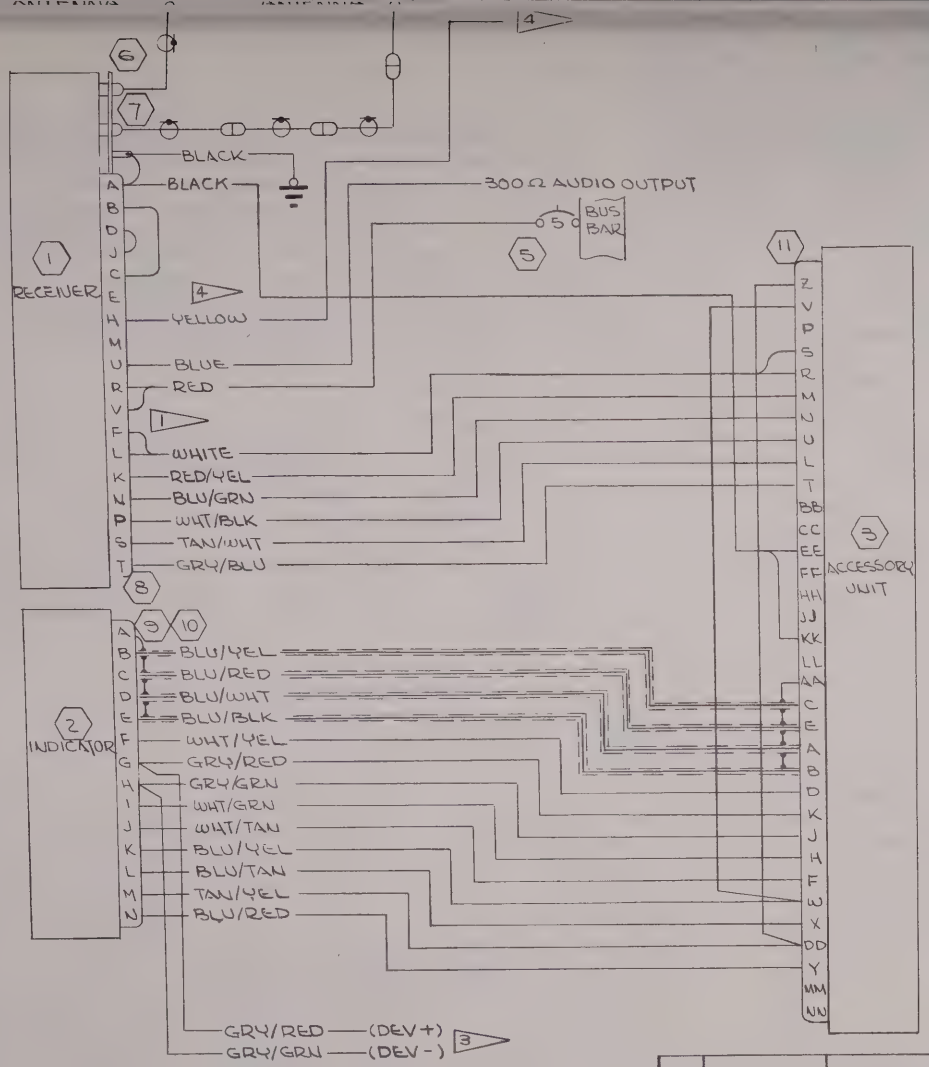


ACCESSORY UNIT. REMOVED JUMPER FROM PIN P TO PIN Z OF ACCESSORY UNIT. REMOVED BLK WIRE FROM PIN Z TO GND ON ACCESSORY UNIT. ADD JUMPER FROM PIN Z TO PIN DD OF ACCESSORY UNIT. ADD JUMPER FROM PIN V TO PIN W.

HALVED & SOLDERED TO PINS AS SHOWN.

2. WIRE MATERIAL PER S-1460 EXCEPT FOR SHIELDED WIRE.
3. TERMINALS NOT REQD WHEN RADIO IS INSTALLED WITH AN AUTOPILOT.
4. LIGHT DIM WIRE CONNECTS TO FLOOD LIGHT DIM RHEOSTAT WITH STANDARD LIGHTING. WHEN POST LIGHTING IS INSTALLED CONNECT TO FLIGHT INST & DUAL LIGHT DIM RESISTOR.

| WIRE CODE NO. | GA | MATERIAL | LG | TERMINALS | | SERIALS |
|---|---|---|---|---|---|---|
| BLACK | 18 | -18-0 | | SOLDER | SOLDER | |
| BLU/RED | 22 | -22-6-2 | | SOLDER | SOLDER | |
| | | | | | | |
| BLACK | 18 | -18-0 | | | S1367-1-3 | |
| TAN/YEL | 22 | -22-10-4 | | | SOLDER | |
| TAN/WHT | 22 | -22-10-9 | | | | |
| WHT/TAN | 22 | -22-9-10 | | | | |
| WHT/GRN | 22 | -22-9-5 | | | | |
| WHT/YEL | 22 | -22-9-4 | | | | |
| WHT/BLK | 22 | -22-9-0 | | | SOLDER | |
| GRY/GRN | 22 | -22-8-5 | | | S-1557-1 | |
| GRY/RED | 22 | -22-8-2 | | | S-1557-1 | |
| GRY/GRN | 22 | -22-8-5 | | | SOLDER | |
| GRY/RED | 22 | -22-8-2 | | | | |
| GRY/BLU | 22 | -22-8-6 | | | | |
| BLU/YEL | 22 | -22-6-4 | | | | |
| BLU/TAN | 22 | -22-6-10 | | | | |
| BLU/BLK | 22S | S-1461-22-6-0 | | | | |
| BLU/WHT | 22S | S-1461-22-6-9 | | | | |
| BLU/RED | 22S | S-1461-22-6-2 | | | | |
| BLU/YEL | 22S | S-1461-22-6-4 | | | | |
| BLU/GRN | 22 | -22-6-5 | | | | |
| RED/YEL | 22 | -22-2-4 | | | | |
| WHITE | 18 | -18-9 | | | SOLDER | |
| YELLOW | 18 | -18-4 | | | | |
| BLUE | 22 | -22-6 | | | | |
| RED | 18 | -18-2 | | SOLDER | S-1367-1-6 | |

2 WIRE TABLE

| ITEM NO | PART NO. | DESCRIPTION | INSTALLED ON |
|---|---|---|---|
| 11 | 29747-0034 | CONNECTOR(ARC) | |
| 10 | MS3057-12A | CLAMP | |
| 9 | MS3106A20-27S | PLUG | |
| 8 | 29747-0018 | CONNECTOR(ARC) | |
| 7 | 29752 | CONNECTOR(ARC) | |
| 6 | 29753 | CONNECTOR(ARC) | |
| 5 | S-1360-5 | CIRCUIT BREAKER | |
| 4 | | | |
| 3 | 32890-0028 | ACCESSORY UNIT (ARC RA-525A) | |
| 2 | 32350 | INDICATOR(ARC IN525A) | |
| 1 | 31380-1000 | RCVR(ARC R525A-10) | |

EQUIPMENT TABLE

CESSNA AIRCRAFT CO., COMMERCIAL AIRCRAFT DIVISION, WICHITA, KANSAS

| | NAME | DATE |
|---|---|---|
| DRAWN | HARDEN | 9-28-64 |
| GROUP | | |
| CHECK | R. Stuck | 10-26-64 |
| PROJ | W. Wise | 10-26-64 |

TITLE: WIRING DIAGRAM— CESSNA NAV/OMNI 300 (ARC TYPE 525A)

Cessna

DWG NO: 1570001

SUPERSEDED BY: | SUPERSEDES: | MODEL: 337 | REV: A | PAGE: 3.22.1

FORM NO. 80-161A

| CHG LET | REVISION | BY / DATE | CHK / APPD |
|---|---|---|---|
| A | TITLE WAS CESSNA 300 HF, CHG DWG. TO AGREE. 39034 WAS 32270-0028, 39035 WAS 32280-0028, 17013 WAS 33341, 17005 WAS 33340. CHG NOTE 1 TO DX10-DA. (SR4697) | 228 / 2-26-65 | RRS / [illegible] / [illegible] |

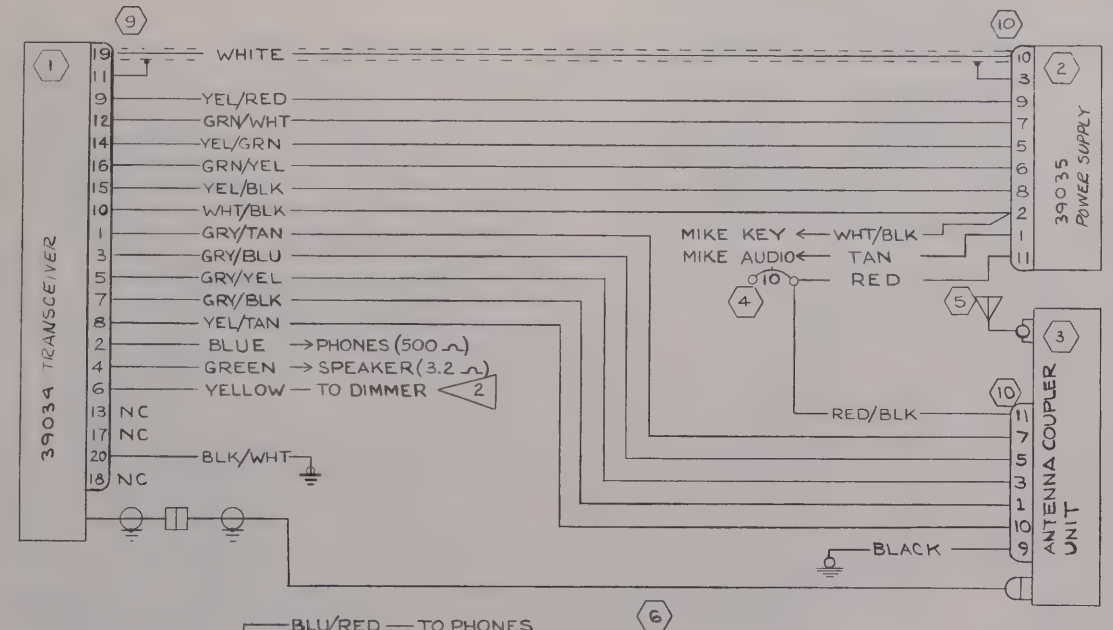


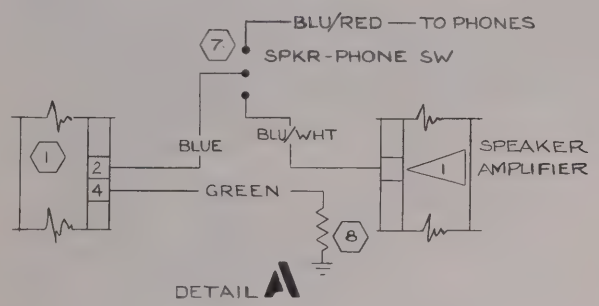


NOTE:

1. WHEN THE DX10-DA TRANSCEIVER IS INSTALLED WITH OTHER EQUIPMENT THE PHONE AND SPEAKER WIRING WILL BE AS SHOWN IN DETAIL A. IF THE OTHER EQUIPMENT HAS AN INTERNAL 150 AMP IT WILL BE USED, IF NOT AN EXTERNAL 150 AMP WILL BE REQUIRED. IN EITHER CASE THE IDENTIFICATION OF THE AUDIO INPUT PIN WILL BE DETERMINED UPON INSTALLATION.
2. LITE DIMMER WIRE CONNECTS TO FLOOD LITE DIM. RHEO WITH STD LIGHTING. WHEN OPTIONAL POST LIGHTING IS INSTALLED CONNECT TO FLIGHT INST & RADIO DIAL LITE DIM. RESISTOR.

| | | | |
|---|---|---|---|
| 10 | 17005 | PLUG (PNTR.) | |
| 9 | 17013 | PLUG (PNTR.) | |
| 8 | 4 Ω 10W | RESISTOR | |
| 7 | MST-105E | SWITCH | (AELM) |
| 6 | 1570001-228 | R F CABLE | |
| 5 | 1570001-610 | ANTENNA | |
| 4 | S-1360-10 | CIRCUIT BREAKER | |
| 3 | 39031 | ANT. COUPLER | (PNTR) |
| 2 | 39035 | POWER SUPPLY | (PNTR.) |
| 1 | 39034 | TRANSCEIVER | (PNTR.) |

| WIRE COLOR | GA | MATERIAL | LG | TERMINALS | | | SERIALS |
|---|---|---|---|---|---|---|---|
| BLU/WHT | 22 | S-1460-22-6-9 | | SOLDER | SOLDER | | |
| BLU/RED | 22 | S-1460-22-6-2 | | SOLDER | S-341-2 | | |
| BLACK | 18 | S-1460-18-0 | | S-1367-1-8 | SOLDER | | |
| RED/BLK | 18 | S-1460-18-2-0 | | S-1367-1-6 | SOLDER | | |
| RED | 16 | S-1460-16-2 | | S-1367-2-6 | SOLDER | | |
| TAN | 22 | S-1460-22-10 | | SOLDER | S-341-2 | | |
| WHT/BLK | 22 | S-1460-22-9-0 | | | S-341-2 | | |
| BLK/WHT | 18 | S-1460-18-0-9 | | | S-1367-1-8 | | |
| YELLOW | 20 | S-1460-20-4 | | | | | |
| GREEN | 20 | S-1460-20-5 | | | S-341-2 | | |
| BLUE | 22 | S-1460-22-6 | | | S-341-2 | | |
| YEL/TAN | 20 | S-1460-20-4-10 | | | | | |
| GRY/BLK | 22 | S-1460-22-8-0 | | | | | |
| GRY/YEL | 22 | S-1460-22-8-4 | | | | | |
| GRY/BLU | 22 | S-1460-22-8-6 | | | | | |
| GRY/TAN | 22 | S-1460-22-8-10 | | | | | |
| WHT/BLK | 22 | S-1460-22-9-0 | | | | | |
| YEL/BLK | 18 | S-1460-18-4-0 | | | | | |
| GRN/YEL | 20 | S-1460-20-5-4 | | | | | |
| YEL/GRN | 20 | S-1460-20-4-5 | | | | | |
| GRN/WHT | 20 | S-1460-20-5-9 | | | | | |
| YEL/RED | 20 | S-1460-20-4-2 | | | | | |
| WHITE | 20S | S-1535-20-9 | | SOLDER | SOLDER | | |

WIRE TABLE

CESSNA AIRCRAFT CO., COMMERCIAL AIRCRAFT DIVISION, WICHITA, KANSAS

| | NAME | DATE |
|---|---|---|
| DRAWN | ACKERSON | 10-26-64 |
| GROUP | | |
| CHECK | R. Stuck | 10-27-64 |
| PROJ | H. Wise | 10-26-64 |

TITLE: WIRING DIAGRAM— PANTRONICS DX10-DA TRANSCEIVER

Cessna

DWG NO: 1570001

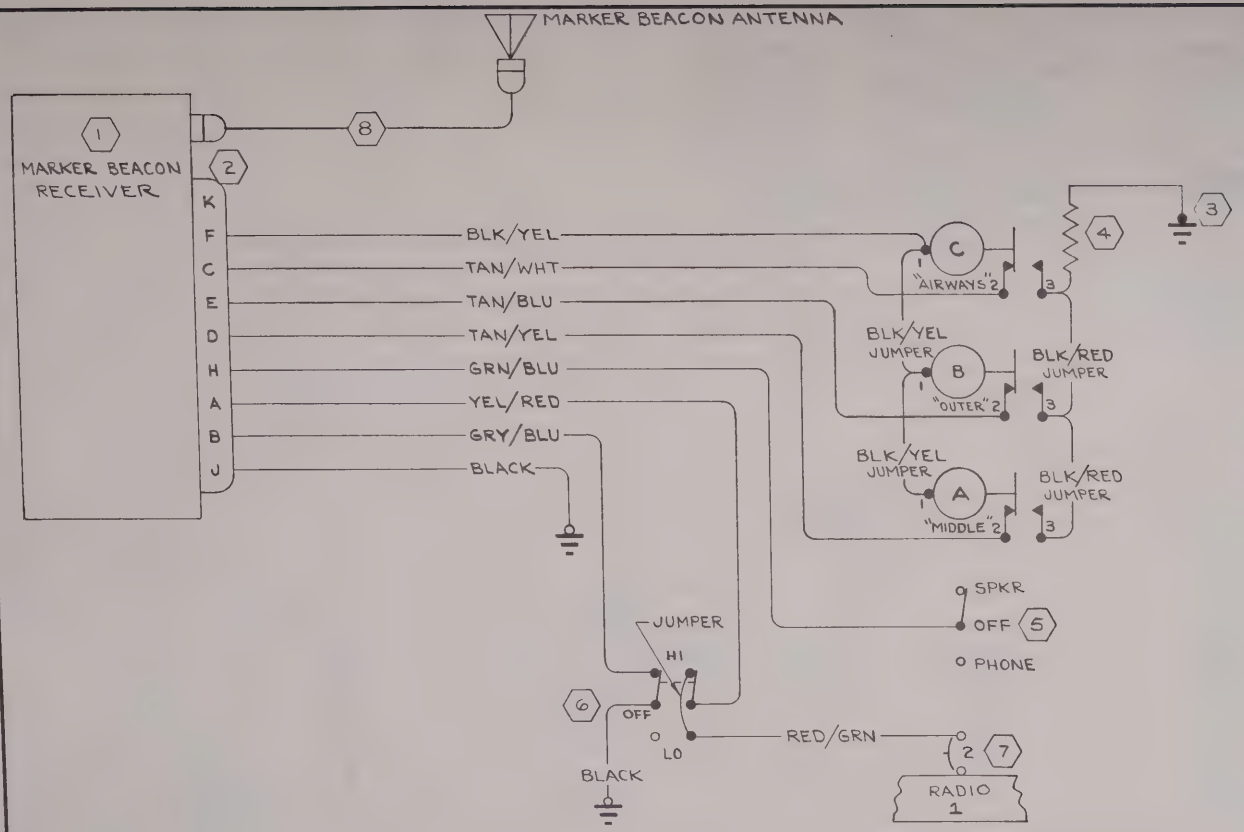


| CHG LET | REVISION | BY DATE | CHK APPD |
|---|---|---|---|
| | | | |

NOTES:
1. WIRE MATERIAL PER S-1460.

| WIRE CODE NO. | GA | MATERIAL | LG | TERMINALS | | | SERIALS |
|---|---|---|---|---|---|---|---|
| TAN/WHT | 22 | -22-10-9 | | SOLDER | SOLDER | | |
| TAN/BLU | 22 | -22-10-6 | | | SOLDER | | |
| TAN/YEL | 22 | -22-10-4 | | | SOLDER | | |
| GRY/BLU | 22 | -22-8-6 | | | SOLDER | | |
| GRN/BLU | 20 | -20-5-6 | | | SOLDER | | |
| YEL/RED | 20 | -20-4-2 | | | SOLDER | | |
| RED/GRN | 20 | -20-2-5 | | | S-1367-1-6 | | |
| BLACK | 22 | -22-0 | | | S-1367-1-8 | | |
| BLACK | 22 | -22-0 | | | S-1367-1-8 | | |
| BLK/YEL | 22 | -22-0-4 | | SOLDER | SOLDER | | |

1 WIRE TABLE

| ITEM NO | PART NO. | DESCRIPTION | INSTALLED ON |
|---|---|---|---|
| 8 | -204 | CABLE ASSY | |
| 7 | S-1360-2 | CIRCUIT BREAKER | |
| 6 | 8867K1 | SWITCH (CUT) | |
| 5 | 8866K1 | SWITCH (CUT) | |
| 4 | 82Ω, 2 WATT | RESISTOR (OM) | |
| 3 | 28487 | TERMINAL (ARC) | |
| 2 | 28371-0009 | PLUG (ARC) | |
| 1 | 31240-0028 | MKR BCN RCVR | (ARC) |

EQUIPMENT TABLE

CESSNA AIRCRAFT CO., COMMERCIAL AIRCRAFT DIVISION, WICHITA, KANSAS

| | NAME | DATE |
|---|---|---|
| DRAWN | RIDDER | 9-21-64 |
| GROUP | | |
| CHECK | R. Stark | 10-1-64 |
| PROJ | N. Wise | 9-30-64 |

TITLE: WIRING DIAGRAM — CESSNA MARKER BEACON 300 (ARC TYPE R-502B)

Cessna

DWG NO 1570001

SUPERSEDED BY | SUPERSEDES | MODEL: 337 | REV: | PAGE: 2.24.1

| CHG LET | REVISION | BY DATE | CHK APPD |
|---|---|---|---|
| | | | |

NOTES:

1. ITEMS 6, 7, & 8 ARE SUPPLIED AS PART OF KN-60 INSTL KIT NO. 050-1052-00.

2. CONNECT TO FLOOD LITE DIMMER RHEOSTAT WITH STD LIGHTING. CONNECT TO FLIGHT INST & RADIO DIAL LIGHT DIMMING RESISTOR WITH OPT POST LIGHTING

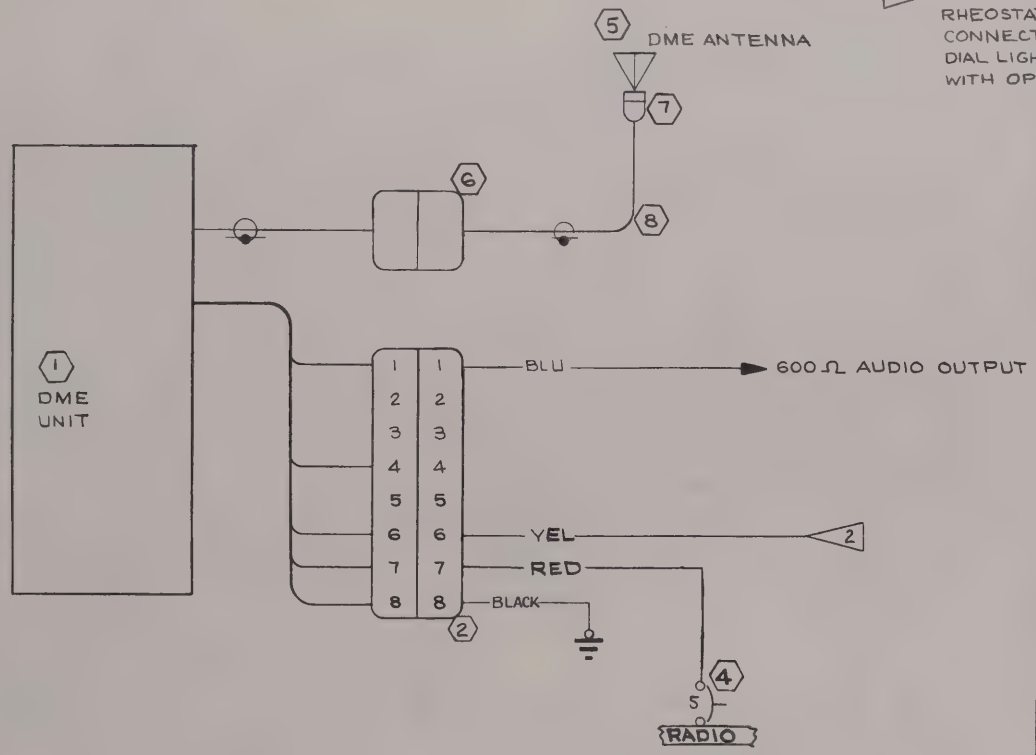


| ITEM NO | PART NO. | DESCRIPTION | INSTALLED ON |
|---|---|---|---|
| 8 | 024-0001-00 | R.F. CABLE (KG) | |
| 7 | 030-24-00 | CONNECTOR RT ANGLE (KG) | |
| 6 | 030-0021-01 | CONNECTOR (KG) | |
| 5 | KA-15 | ANTENNA (KG) | |
| 4 | S-1360-5 | CIRCUIT BKR | |
| 3 | | | |
| 2 | 030-204-- 0 | CONNECTOR (KG) | |
| 1 | KN-60 | DME UNIT (KG) | |

EQUIPMENT TABLE

| WIRE CODE NO. | GA | MATERIAL | LG | TERMINALS | | SERIALS |
|---|---|---|---|---|---|---|
| BLU | 22 | -22-6 | | SOLDER | | |
| RED | 16 | -16-2 | | | S-1367-2-6 | |
| YEL | 18 | -18-4 | | | | |
| BLACK | 16 | -16-0 | | SOLDER | S-1367-2-8 | |

WIRE TABLE

CESSNA AIRCRAFT CO. COMMERCIAL AIRCRAFT DIVISION, WICHITA, KANSAS

| | NAME | DATE |
|---|---|---|
| DRAWN | BREEN | 8-30-64 |
| GROUP | | |
| CHECK | R. Stuck | 11-21-64 |
| PROJ | [illegible] | 11-19-64 |

TITLE: WIRING DIAGRAM — KING KN-60 DME

Cessna.

DWG NO. 1570001

| SUPERSEDED BY | SUPERSEDES | MODEL: 337 | REV | PAGE: 2. 26. 1 |
|---|---|---|---|---|

FORM NO. 80-161

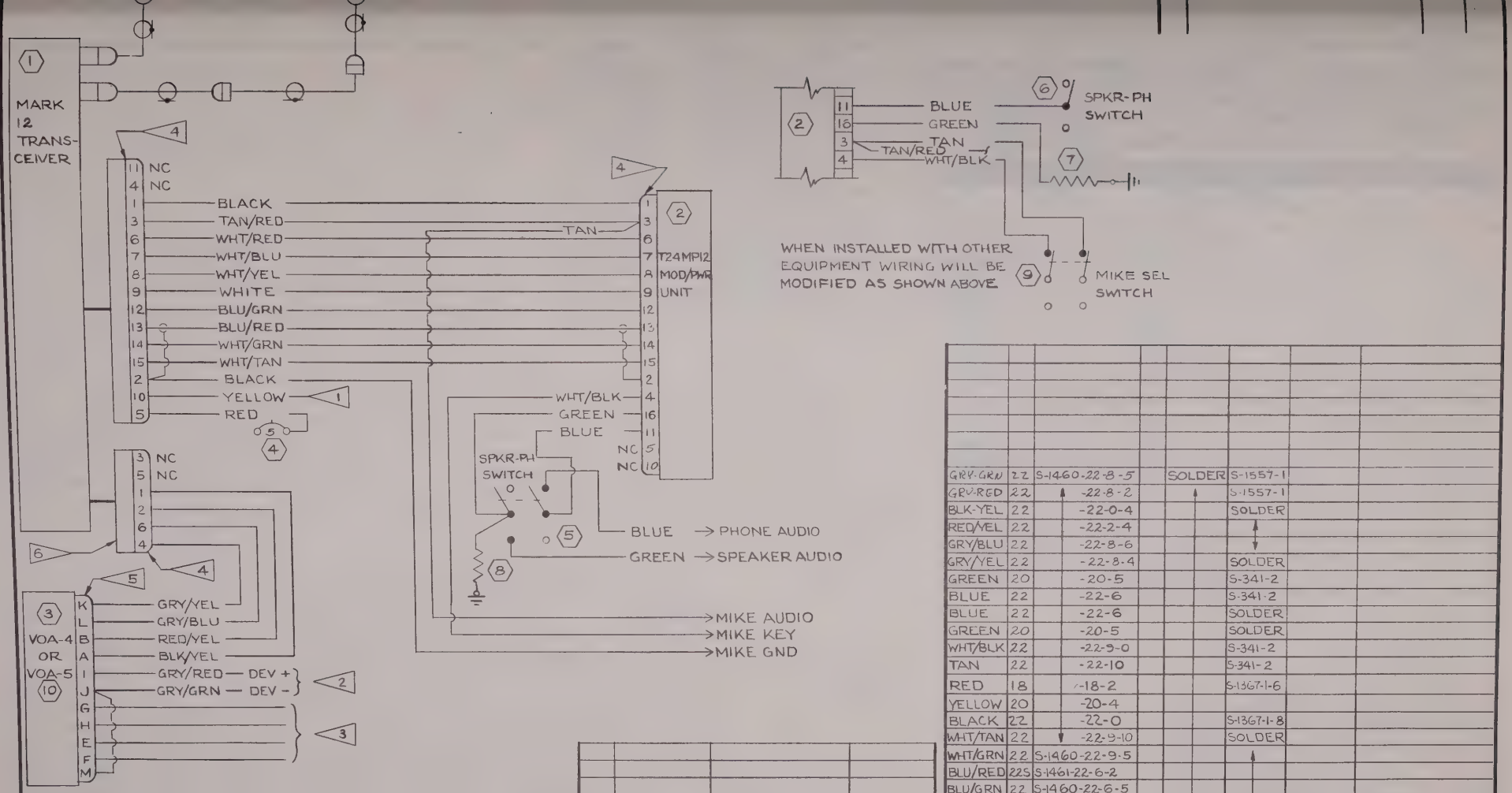


NOTES:

1. THIS WIRE TO CONNECT TO FLOOD LIGHT DIMMER RHEOSTAT WITH STANDARD LIGHTING. WHEN OPTIONAL POST LIGHTING IS INSTALLED CONNECT TO FLIGHT INSTRUMENT AND RADIO DIMMING RESISTOR.
2. TO BE USED WITH AUTOPILOT.
3. SEE GLIDE SLOPE WIRING DIAGRAM FOR CONNECTIONS WHEN REQUIRED.
4. PART OF NARCO CONNECTOR KIT EL-2052
5. PLUG SUPPLIED WITH CONVERTER/INDICATOR
6. PENDANT CABLE PLUGS DIRECTLY INTO VOA-6

| ITEM NO | PART NO. | DESCRIPTION | INSTALLED ON |
|---|---|---|---|
| 10 | VOA-5 | CONVERTER-IND(NARO) | |
| 9 | 8867K4 | SWITCH (CUT) | |
| 8 | 30Ω 10W | RESISTOR (OM) | |
| 7 | 5Ω 10W | RESISTOR (OM) | |
| 6 | 8866K1 | SWITCH (CUT) | |
| 5 | 8867K1 | SWITCH (CUT) | |
| 4 | S-1360-5 | CIRCUIT BREAKER | |
| 3 | VOA-4 | CONVERTER-IND (NARO) | |
| 2 | T24MPI2 | MOD-POWER UNIT (NARO) | |
| 1 | MARK 12 | TRANSCEIVER (NARO | |

EQUIPMENT TABLE

| WIRE COLOR | GA | MATERIAL | LG | TERMINALS | | SERIALS |
|---|---|---|---|---|---|---|
| GRY-GRN | 22 | S-1460-22-8-5 | | SOLDER | S-1557-1 | |
| GRY-RED | 22 | -22-8-2 | | | S-1557-1 | |
| BLK-YEL | 22 | -22-0-4 | | | SOLDER | |
| RED/YEL | 22 | -22-2-4 | | | | |
| GRY/BLU | 22 | -22-8-6 | | | | |
| GRY/YEL | 22 | -22-8-4 | | | SOLDER | |
| GREEN | 20 | -20-5 | | | S-341-2 | |
| BLUE | 22 | -22-6 | | | S-341-2 | |
| BLUE | 22 | -22-6 | | | SOLDER | |
| GREEN | 20 | -20-5 | | | SOLDER | |
| WHT/BLK | 22 | -22-9-0 | | | S-341-2 | |
| TAN | 22 | -22-10 | | | S-341-2 | |
| RED | 18 | -18-2 | | | S-1367-1-6 | |
| YELLOW | 20 | -20-4 | | | | |
| BLACK | 22 | -22-0 | | | S-1367-1-8 | |
| WHT/TAN | 22 | -22-9-10 | | | SOLDER | |
| WHT/GRN | 22 | S-1460-22-9-5 | | | | |
| BLU/RED | 22S | S-1461-22-6-2 | | | | |
| BLU/GRN | 22 | S-1460-22-6-5 | | | | |
| WHITE | 18 | -9 | | | | |
| WHT/YEL | 22 | -22-9-4 | | | | |
| WHT/BLU | 22 | -22-9-6 | | | | |
| WHT/RED | 22 | -22-9-2 | | | | |
| TAN/RED | 22 | -22-10-2 | | | | |
| BLACK | 16 | S-1460-16-0 | | SOLDER | SOLDER | |

WIRE TABLE

CESSNA AIRCRAFT CO., COMMERCIAL AIRCRAFT DIVISION, WICHITA, KANSAS

| | NAME | DATE |
|---|---|---|
| DRAWN | ACKERSON | 10-30-64 |
| GROUP | | |
| CHECK | R. Stuck | 11-16-64 |
| PROJ | N Wise | |
| | [illegible] | |

TITLE: WIRING DIAGRAM— NARCO MARK 12, VOA-4 ; VOA-5 VOA-6

Cessna®

DWG NO: 1570001

| SUPERSEDED BY: | SUPERSEDES: | MODEL: | REV: | PAGE: |
|---|---|---|---|---|
| | | 337 | | 2.31.1 |

FORM NO 80-161A

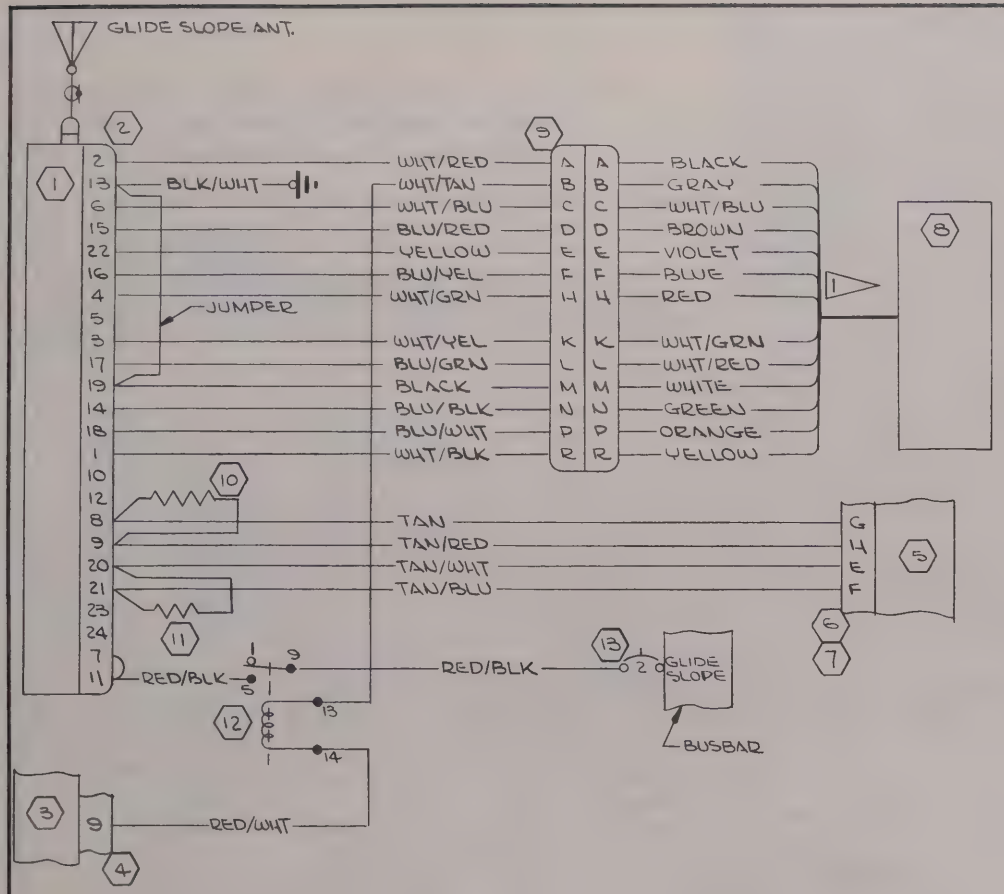


NOTES:

1. THESE WIRES PART OF MARK 12 PANEL UNIT
2. FURNISHED WITH UGR-1A GLIDESLOPE RECEIVER KIT.
3. WIRE MATERIAL PER S-1460.

| CHG LET | REVISION | BY DATE | CHK APPD |
|---|---|---|---|
| | | | |

| WIRE CODE NO | GA | MATERIAL | LG | TERMINALS | | SERIALS |
|---|---|---|---|---|---|---|
| BLK/WHT | 18 | -18-0.9 | | SOLDER | S-1367-1.8 | |
| BLACK | 22 | -22-0 | | | SOLDER | |
| YELLOW | 18 | -18-4 | | | | |
| BLU/WHT | 22 | -22-6.9 | | | | |
| BLU/GRN | 22 | -22-6.5 | | | | |
| BLU/YEL | 22 | -22-6.4 | | | | |
| BLU/RED | 22 | -22-6.2 | | | | |
| BLU/BLK | 22 | -22-6.0 | | | | |
| TAN/BLU | 22 | -22-10.6 | | | | |
| TAN/WHT | 22 | -22-10.9 | | | | |
| TAN/RED | 22 | -22-10.2 | | | | |
| TAN | 22 | -22-10 | | | | |
| RED/WHT | 18 | -18-2.9 | | | | |
| RED/BLK | 18 | -18-2.0 | | SOLDER | | |
| RED/BLK | 18 | -18-2.0 | | S-1367-1.6 | | |
| WHT/TAN | 22 | -22-9.10 | | SOLDER | | |
| WHT/BLU | 22 | -22-9.6 | | | | |
| WHT/GRN | 22 | -22-9.5 | | | | |
| WHT/YEL | 22 | -22-9.4 | | | | |
| WHT/BLK | 22 | -22-9.0 | | | | |
| WHT/RED | 22 | -22-9.2 | | SOLDER | SOLDER | |

3 WIRE TABLE

| ITEM NO | PART NO. | DESCRIPTION | INSTALLED ON |
|---|---|---|---|
| 13 | S-1360-2 | CIRCUIT BREAKER | |
| 12 | -709 | RELAY INSTAL | |
| 11 | 510 Ω ½ WATT | RESISTOR (OM) "LITTLE DEVIL" | |
| 10 | 1000 Ω ½ WATT | RESISTOR (OM) "LITTLE DEVIL" | |
| 9 | 41247-102 | CONNECTOR (NARO) | |
| 8 | MARK 12 | TRANSCEIVER | (NARO) |
| 7 | 41228-6 | CLAMP (NARO) | |
| 6 | 41233-2 | PLUG (NARO) | |
| 5 | VOA-5 | CONVERT.-IND (NARO) | |
| 4 | 41271-1 | CONNECTOR (NARO) | |
| 3 | T-24MP12 | MOD.-PWR UNIT (NARO) | |
| 2 | 41246-1 | CONNECTOR (NARO) | |
| 1 | UGR-1A | RECEIVER (NARO) | |

2 EQUIPMENT TABLE

CESSNA AIRCRAFT CO., COMMERCIAL AIRCRAFT DIVISION, WICHITA, KANSAS

| | NAME | DATE |
|---|---|---|
| DRAWN | HARDEN | 1-30-65 |
| GROUP | H Wise | 2-23-65 |
| CHECK | R Stick | 2-23-65 |
| PROJ | [illegible] | 2-23-65 |

TITLE: WIRING DIAGRAM — NARCO UGR-1A GLIDESLOPE RECEIVER WITH NARCO MARK 12 & VOA-5

Cessna.

DWG NO. 1570001

| SUPERSEDED BY | SUPERSEDES | MODEL | REV | PAGE |
|---|---|---|---|---|
| | | 337 | | 2.32.1 |

FORM NO. 80-161

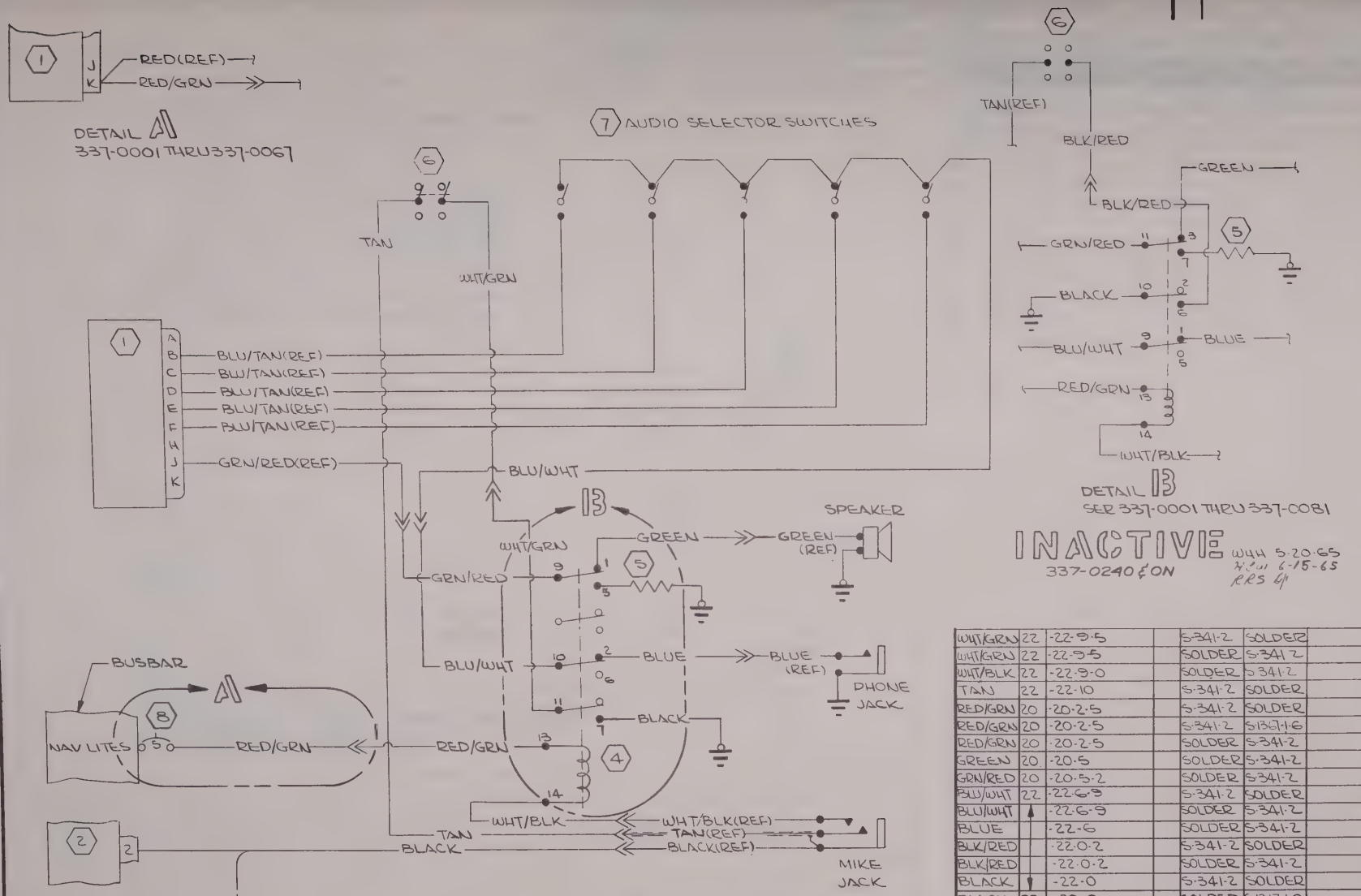


NOTES:
1 WIRE MATERIAL PER S-1460.

| WIRE CODE NO. | GA | MATERIAL | LG | TERMINALS | | | SERIALS |
|---|---|---|---|---|---|---|---|
| WHT/GRN | 22 | -22-9-5 | | S-341-2 | SOLDER | | 337-0082 & ON |
| WHT/GRN | 22 | -22-9-5 | | SOLDER | S-341-2 | | 337-0082 & ON |
| WHT/BLK | 22 | -22-9-0 | | SOLDER | S-341-2 | | |
| TAN | 22 | -22-10 | | S-341-2 | SOLDER | | |
| RED/GRN | 20 | -20-2-5 | | S-341-2 | SOLDER | | 337-0001 THRU 337-0067 |
| RED/GRN | 20 | -20-2-5 | | S-341-2 | S-1367-1-6 | | 337-0068 & ON |
| RED/GRN | 20 | -20-2-5 | | SOLDER | S-341-2 | | |
| GREEN | 20 | -20-5 | | SOLDER | S-341-2 | | |
| GRN/RED | 20 | -20-5-2 | | SOLDER | S-341-2 | | |
| BLU/WHT | 22 | -22-6-9 | | S-341-2 | SOLDER | | |
| BLU/WHT | | -22-6-9 | | SOLDER | S-341-2 | | |
| BLUE | | -22-6 | | SOLDER | S-341-2 | | |
| BLK/RED | | -22-0-2 | | S-341-2 | SOLDER | | 337-0001 THRU 337-0081 |
| BLK/RED | | -22-0-2 | | SOLDER | S-341-2 | | 337-0001 THRU 337-0081 |
| BLACK | | -22-0 | | S-341-2 | SOLDER | | |
| BLACK | 22 | -22-0 | | SOLDER | S-1367-1-8 | | |

1 WIRE TABLE

| ITEM NO | PART NO. | DESCRIPTION | INSTALLED ON |
|---|---|---|---|
| 8 | S-1360-5 | CIRCUIT BREAKER | |
| 7 | 8866K1 | AUDIO SEL SW | (CUT) |
| 6 | 8867K4 | MIKE SEL SWITCH | (CUT) |
| 5 | 5 OHM 10 WATT | RESISTOR "BROWN DEVIL" | (OM) |
| 4 | -709 | RELAY INSTAL | |
| 3 | KY-95E | TRANSCEIVER | (KG) |
| 2 | T-24MP12 | MOD. PWR UNIT | (NARO) |
| 1 | KA-11 | ISO AMPLIFIER | (KG) |

EQUIPMENT TABLE

CESSNA AIRCRAFT CO., COMMERCIAL AIRCRAFT DIVISION, WICHITA, KANSAS

| | NAME | DATE |
|---|---|---|
| DRAWN | HARDEN | 2-13-65 |
| GROUP | H. Wise | 4-8-65 |
| CHECK | R. Stupk | 4-8-65 |
| PROJ | [illegible] | 4-8-65 |

TITLE: WIRING DIAGRAM— AUDIO SYSTEM- NARCO & KING

Cessna

DWG NO: 1570001

SUPERSEDED BY: 1570001 PG 2.49 | SUPERSEDES: | MODEL: 337 | REV: | PAGE: 2.33

FORM NO 80-161A

| CHG LET | REVISION | BY / DATE | CHK / APPD |
|---|---|---|---|
| A | ADDED ITEM 6 TO FIELD OF DWG & TO EQUIP TABLE. ADDED NOTE 4 | WDA 10-1-65 | |

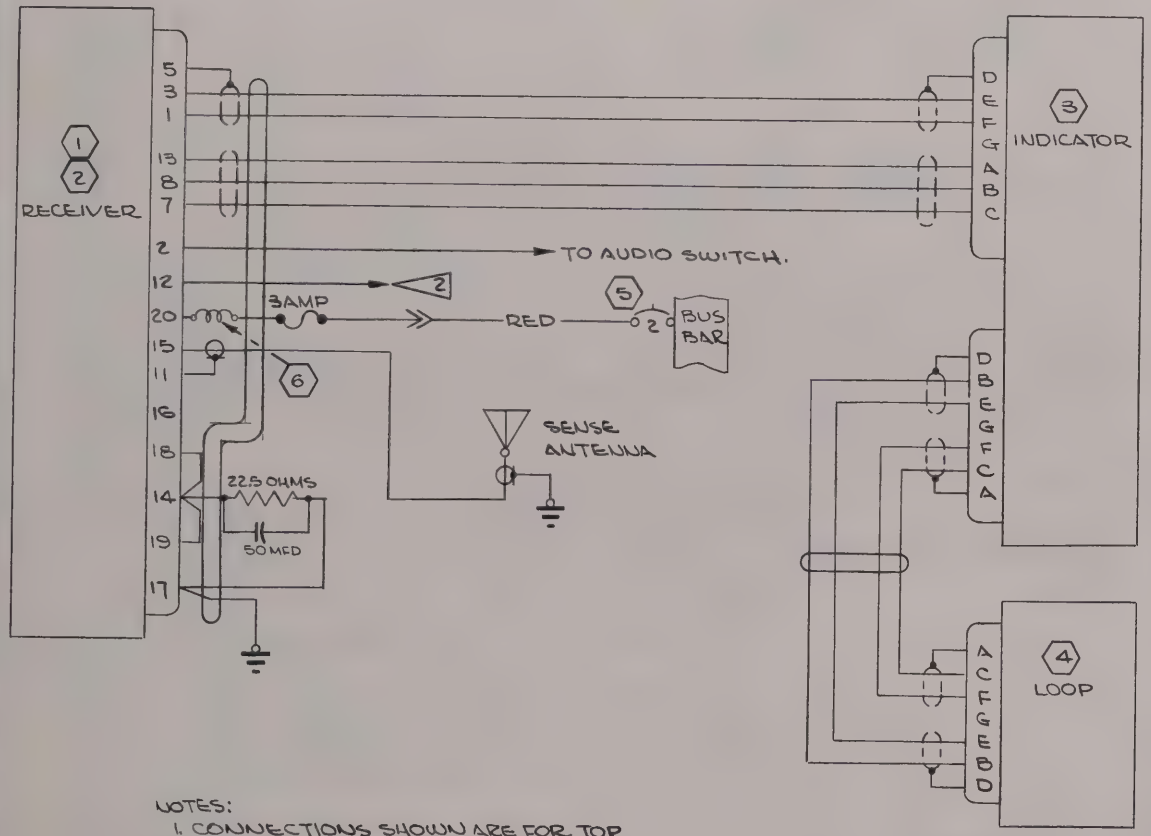


NOTES:

1. CONNECTIONS SHOWN ARE FOR TOP MOUNTED SENSE ANTENNA & BOTTOM MOUNTED LOOP.
2. LIGHT DIMMING WIRE CONNECTS TO FLOOD LIGHT DIMMING RHEOSTAT WITH STANDARD LIGHTING. WHEN OPTIONAL POST LIGHTING IS INSTALLED, CONNECT TO FLIGHT INSTRUMENT & RADIO DIAL LIGHT DIMMING RHEOSTAT.
3. CABLES ARE VENDOR SUPPLIED.
4. ALL WIRES ARE VENDOR FURNISHED WITH RECEIVER EXCEPT CHOKE IN CIRCUIT BETWEEN PIN 20 AND FUSE HOLDER WHICH MUST BE ADDED UPON INSTALLATION.

| | | | |
|---|---|---|---|
| 6 | A-263 | CHOKE (CTAT) | PG 1.2 |
| 5 | S-1360-2 | CIRCUIT BREAKER | |
| 4 | 32880-1100 | LOOP | (ARC TYPE L-521B-10) |
| 3 | 32680-0000 | INDICATOR | (ARC TYPE IN-521B) |
| 2 | 28340-1400 | RCVR (WITH BFO) | (ARC TYPE R-521A-14) |
| 1 | 28340-1500 | RCVR (LESS BFO) | (ARC TYPE R-521A-15) |

| WIRE CODE NO. | GA | MATERIAL | LG | TERMINALS | | | SERIALS |
|---|---|---|---|---|---|---|---|
| RED | 18 | S-1460-18-2 | | S1367-1-6 | S-341-2 | | |

WIRE TABLE

CESSNA AIRCRAFT CO., COMMERCIAL AIRCRAFT DIVISION, WICHITA, KANSAS

| | NAME | DATE |
|---|---|---|
| DRAWN | HARDEN | 12-24-64 |
| GROUP | | |
| CHECK | R. Stuck | 1-23-65 |
| PROJ | H. Wise | 1-23-65 |

TITLE: WIRING DIAGRAM— CESSNA ADF 300

Cessna®

DWG NO: LF 70001

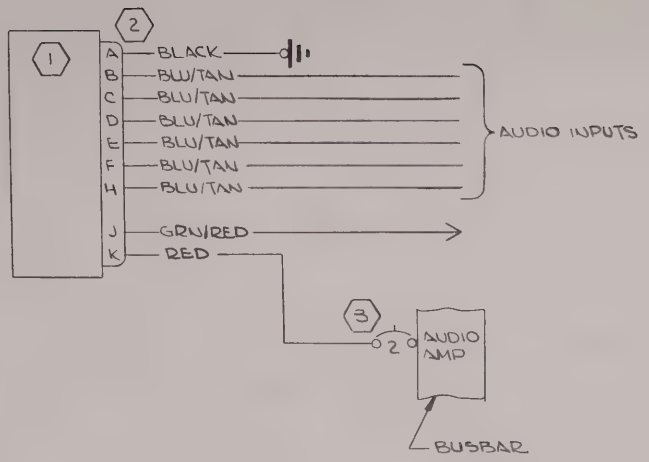


Inactive
337-0240 & ON
WHA 10-15-65
HJW 10-15-65
RRS

NOTES:

1. CONNECTOR IS SUPPLIED WITH KA-11 AMPLIFIER.
2. REMOVE S-1557-1 CAPS AS REQD WHEN THESE WIRES ARE USED FOR AUDIO INPUTS.
3. WIRE MATERIAL PER S-1460

| WIRE CODE NO. | GA | MATERIAL | LG | TERMINALS | | | SERIALS |
|---|---|---|---|---|---|---|---|
| RED | 18 | -18-2 | | SOLDER | S-1367-1-6 | | |
| GRN/RED | 20 | -20-5-2 | | | S-341-2 | | |
| BLU/TAN | 22 | -22-6-10 | | | S-1557-1 | 2 | |
| BLU/TAN | 22 | -22-6-10 | | | | | |
| BLU/TAN | 22 | -22-6-10 | | | | | |
| BLU/TAN | 22 | -22-6-10 | | | | | |
| BLU/TAN | 22 | -22-6-10 | | | | | |
| BLU/TAN | 22 | -22-6-10 | | | S-1557-1 | 2 | |
| BLACK | 22 | -22-0 | | SOLDER | S-1367-1-8 | | |

3 WIRE TABLE

| ITEM NO | PART NO. | DESCRIPTION | INSTALLED ON |
|---|---|---|---|
| 3 | S-1360-2 | CIRCUIT BREAKER | |
| 2 | 126-222 | CONNECTOR (AMBE) | |
| 1 | KA-11 | ISOLATION AMP | (KG) |

1 EQUIPMENT TABLE

CESSNA AIRCRAFT CO., COMMERCIAL AIRCRAFT DIVISION, WICHITA, KANSAS

| | NAME | DATE |
|---|---|---|
| DRAWN | HARDEN | 1-30-65 |
| GROUP | H Wise | 2-23-65 |
| CHECK | R. Stuck | 2-23-65 |
| PROJ | [illegible] | 2-23-65 |

TITLE: WIRING DIAGRAM— ISOLATION AMPLIFIER KING KA-11

Cessna®

DWG NO: 1570001

SUPERSEDED BY: | SUPERSEDES: | MODEL: 337 | REV: | PAGE: 2.39

FORM NO. 80-161A

(SR4697)

| CHG LET | REVISION | BY / DATE | CHK / APPD |
|---|---|---|---|
| | | | |

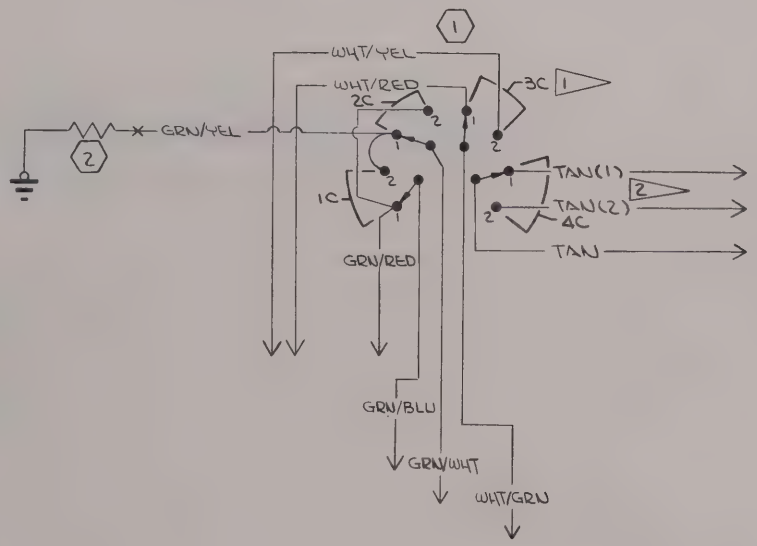


NOTES:

1. 1C, 2C, 3C & 4C DESIGNATE TERMINAL PAIRS ON THE ROTARY SWITCH & ARE STAMPED ON THE SIDE OF THE SWITCH.
2. NUMBERS TO BE STAMPED ON TAN WIRES INDICATED PER CES1015.
3. WIRE MATERIAL PER S1460 UNLESS NOTED.

| WIRE CODE NO. | GA | MATERIAL | LG | TERMINALS | | SERIALS |
|---|---|---|---|---|---|---|
| WHT/GRN | 22 | ·22·9·5 | | SOLDER | S·341·2 | |
| WHT/YEL | 22 | ·22·9·4 | | | | |
| WHT/RED | 22 | ·22·9·2 | | | | |
| TAN | 22 | ·22·10 | | | | |
| TAN(2) | 22 | ·22·10 | | | S·341·2 | |
| TAN(1) | 22 | ·22·10 | | | S·341·2 | |
| GRN/YEL | 20 | ·20 5·4 | | | S·1310·1 | |
| GRN/WHT | 20 | ·20·5·9 | | | S·341·2 | |
| GRN/RED | 20 | ·20·5·2 | | | S·341·2 | |
| GRN/BLU | 20 | ·20·5·6 | | SOLDER | S·341·2 | |

3 WIRE TABLE

CESSNA AIRCRAFT CO., COMMERCIAL AIRCRAFT DIVISION, WICHITA, KANSAS

| | NAME | DATE |
|---|---|---|
| DRAWN | HARDEN | 6-10-65 |
| GROUP | [illegible] | 6-15-65 |
| CHECK | [illegible] | 6-16-65 |

TITLE: WIRING DIAGRAM— TRANSMITTER SELECTOR SWITCH

Cessna.

DWG NO.

| | | | |
|---|---|---|---|
| 2 | 5Ω 10 WATT | RESISTOR(OM) | |
| 1 | -24G | SWITCH | |

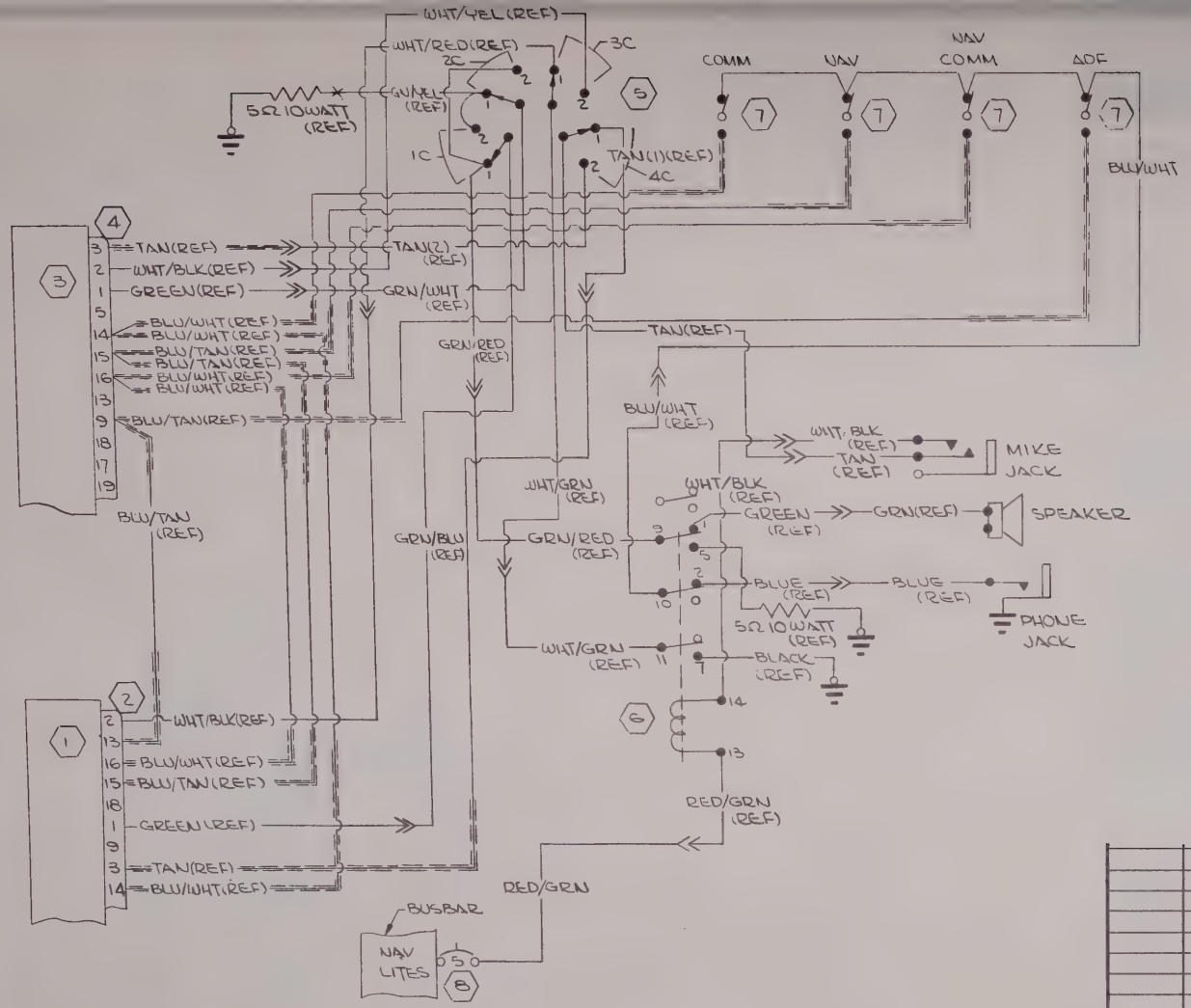


| ITEM NO | PART NO. | DESCRIPTION | INSTALLED ON |
|---|---|---|---|
| 8 | S-1360-5 | CIRCUIT BREAKER | |
| 7 | MST-105E | SWITCH (AELM) | |
| 6 | -240 | CABLE ASSY | |
| 5 | -245 | CABLE ASSY | |
| 4 | 27827 | PLUG (ARC) | |
| 3 | 31630-0028 | DYNAVERTER | (ARC TYPE DV-317B-1) |
| 2 | 28808 | PLUG (ARC) | |
| 1 | 32380-0028 | DYNAVERTER | (ARC TYPE DV-302B) |

EQUIPMENT TABLE

| WIRE CODE NO. | GA | MATERIAL | LG | TERMINALS | | | SERIALS |
|---|---|---|---|---|---|---|---|
| RED/GRN | 20 | S-1460-20-2-5 | | S-1367-1-6 | S-341-2 | | |
| BLU/WHT | 22 | S-1460-22-6-9 | | SOLDER | S-341-2 | | |

WIRE TABLE

CESSNA AIRCRAFT CO., COMMERCIAL AIRCRAFT DIVISION, WICHITA, KANSAS

| | NAME | DATE |
|---|---|---|
| DRAWN | HARDEN | 6-10-65 |
| GROUP | H. Wire | 6-15-65 |
| CHECK | R. Stock | 6-16-65 |
| PROJ | [illegible] | 6-18-65 |

TITLE: WIRING DIAGRAM— AUDIO SYSTEM - CESSNA 500 SERIES RADIOS

Cessna.

DWG NO: 1570001

SUPERSEDED BY: | SUPERSEDES: PAGE 2.0.2 | MODEL: 337A | REV: | PAGE: 2.41

FORM NO 80-161A

| CHG LET | REVISION | BY / DATE | CHK / APPD |
|---|---|---|---|
| | | | |

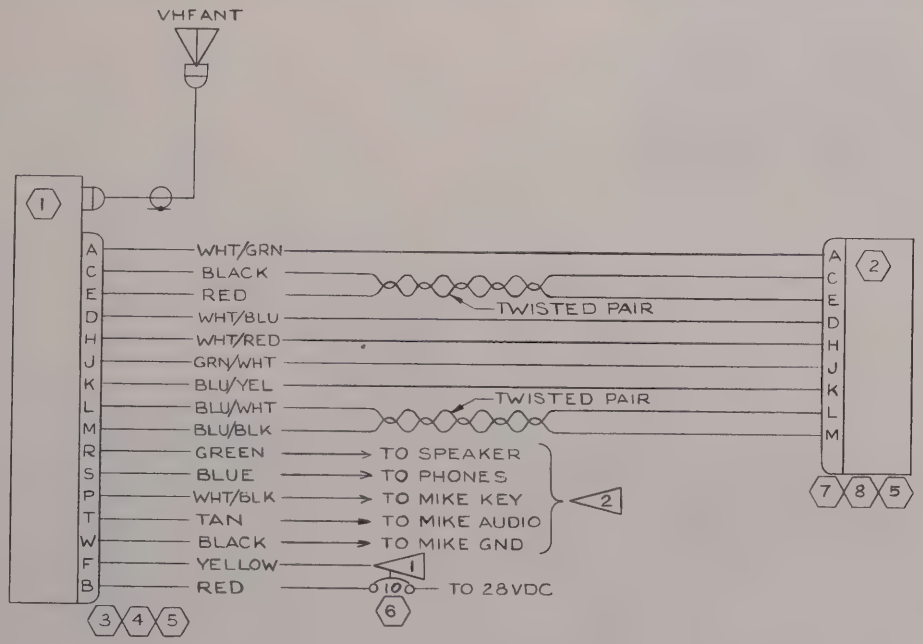


NOTES:

1. LIGHT DIM. WIRE CONNECTS TO FLOOD LIGHT DIMMING RHEOSTAT WITH STD LIGHTING. WHEN OPT POST LIGHTING IS INSTALLED CONNECT TO FLIGHT INSTR & RADIO DIAL LIGHT DIMMING RHEOSTAT.
2. SEE PAGE 2.0.1 FOR CONNECTIONS FOR SINGLE INSTLS. AND PAGE 2.33 FOR MULTIPLE INSTLS.
3. WIRE MATL PER S-1460

| | | | |
|---|---|---|---|
| 8 | 030-1009-00 | HOOD (KG) | |
| 7 | 030-2000-00 | RECEPTACLE (KG) | |
| 6 | S-1360-10 | CIRCUIT BREAKER | |
| 5 | 030-1008-00 | LEVER & PIVOT ASSY (KG) | |
| 4 | 030-1010-00 | HOOD (KG) | |
| 3 | 030-2002-00 | RECEPTACLE (KG) | |
| 2 | KS-502(A) | POWER SUPPLY (KG) | |
| 1 | KY-95E | TRANSCEIVER (KG) | |

| WIRE CODE NO. | GA | MATERIAL | LG | TERMINALS | | | SERIALS |
|---|---|---|---|---|---|---|---|
| BLACK | 22 | -22-0 | | SOLDER | S-341-2 | | |
| TAN | 22 | -22-10 | | | S-341-2 | | |
| WHT/BLK | 22 | -22-9-0 | | | S-341-2 | | |
| GREEN | 20 | -20-5 | | | S-341-2 | | |
| BLUE | 22 | -22-6 | | | S-341-2 | | |
| YELLOW | 18 | -18-4 | | | | | |
| RED | 16 | -16-2 | | | S-1367-2-6 | | |
| BLU/BLK | 22 | -22-6-0 | | | SOLDER | | |
| BLU/WHT | 22 | -22-6-9 | | | | | |
| BLU/YEL | 22 | -22-6-4 | | | | | |
| GRN/WHT | 20 | -20-5-9 | | | | | |
| WHT/RED | 22 | -22-9-2 | | | | | |
| WHT/BLU | 22 | -22-9-6 | | | | | |
| RED | 16 | -16-2 | | | | | |
| BLACK | 16 | -16-0 | | | | | |
| WHT/GRN | 22 | -22-9-5 | | SOLDER | SOLDER | | |

3 WIRE TABLE

CESSNA AIRCRAFT CO., COMMERCIAL AIRCRAFT DIVISION, WICHITA, KANSAS

| | NAME | DATE |
|---|---|---|
| DRAWN | Anderson | 2-23-65 |
| GROUP | H. Wise | 3-3-65 |
| CHECK | R. Stuck | 3-4-65 |
| PROJ | [illegible] | [illegible] |

TITLE: WIRING DIAGRAM— KING KY-95E

Cessna.

DWG NO:

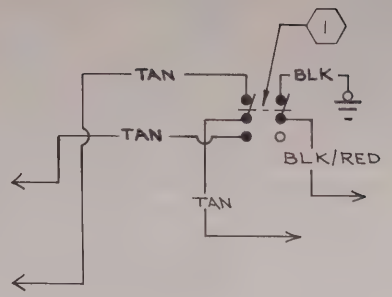


XMTR SEL SWITCH

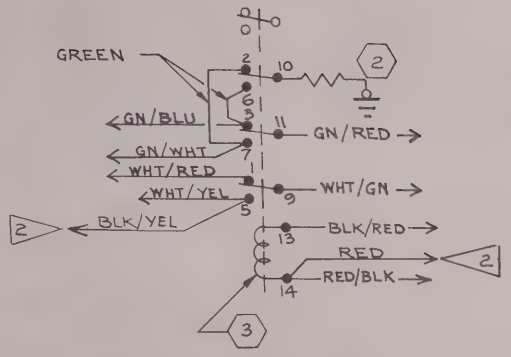


AUDIO SEL RELAY

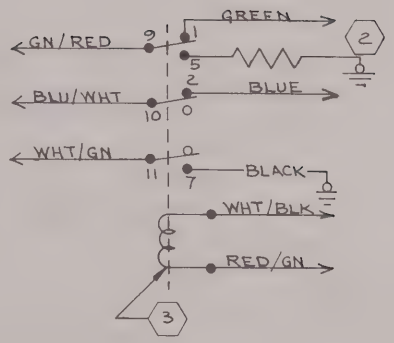


MUTING RELAY

NOTES:

1. WIRE MATERIAL PER S-1460
2. THESE WIRES USED ONLY WITH 500 SERIES RADIOS. COVER DISCONNECT WITH S-292 WHEN NOT USED.

| ITEM NO | PART NO. | DESCRIPTION | INSTALLED ON |
|---|---|---|---|
| 3 | KHP17D11 | RELAY (PBR) | |
| 2 | 5Ω 10WATT | RESISTOR (OM) | |
| 1 | 8867K4 | SWITCH (CUT) | |

EQUIPMENT TABLE

| WIRE CODE NO. | GA | MATERIAL | LG | TERMINALS | | | SERIALS |
|---|---|---|---|---|---|---|---|
| BLK/YEL | 22 | -22-0-4 | 10.50 | S-341-2 | SOLDER | | |
| RED | 18 | -18-2 | 10.50 | S-341-2 | SOLDER | | |
| BLACK | 22 | -22-0 | 10.50 | S-1367-1-8 | SOLDER | | |
| BLACK | 22 | -22-0 | | S-1367-1-8 | | | |
| GREEN | 20 | -20-5 | | S-341-2 | | | |
| WHT/GN | 22 | -22-9-5 | | | | | |
| WHT/BLK | 22 | -22-9-0 | | | | | |
| RED/GN | 20 | -20-2-5 | | | | | |
| GN/RED | 20 | -20-5-2 | | | | | |
| BLU/WHT | 22 | -22-6-9 | | | | | |
| BLUE | 22 | -22-6 | | | | | |
| GN/WHT | 20 | -20-5-9 | | | | | |
| WHT/YEL | 22 | -22-9-4 | | | | | |
| BLK/RED | 22 | -22-0-2 | | | | | |
| GN/BLU | 20 | -20-5-6 | | | | | |
| WHT/RED | 22 | -22-9-2 | | | | | |
| RED/BLK | 22 | -22-2-0 | | | | | |
| WHT/GN | 22 | -22-9-5 | | | | | |
| GN/RED | 20 | -20-5-2 | 10.50 | S-341-2 | | | |
| GREEN | 20 | -20-5 | 2.00 | SOLDER | | | |
| GREEN | 20 | -20-5 | 2.00 | SOLDER | | | |
| BLK/RED | 22 | -22-0-2 | 10.50 | S-341-2 | | | |
| TAN | 22 | -22-10 | | | | | |
| TAN | 22 | -22-10 | | | | | |
| TAN | 22 | -22-10 | 10.50 | S-341-2 | SOLDER | | |

1 WIRE TABLE

CESSNA AIRCRAFT CO., COMMERCIAL AIRCRAFT DIVISION, WICHITA, KANSAS

| | NAME | DATE |
|---|---|---|
| DRAWN | Fogelson | 2-18-65 |
| GROUP | G.D. HLW | 3-3-65 |
| CHECK | R Stuck | 3-3-65 |
| PROJ | [illegible] | 3-4-65 |

TITLE: WIRING DIAGRAM— MUTING RELAY, AUDIO SEL RELAY, XMTR SEL SWITCH.

Cessna®

DWG NO: 1570001

SUPERSEDED BY: | SUPERSEDES: | MODEL: | REV: | PAGE: 2.46

(SR4697)

| CHG LET | REVISION | BY / DATE | CHK / APPD |
|---|---|---|---|
| | | | |

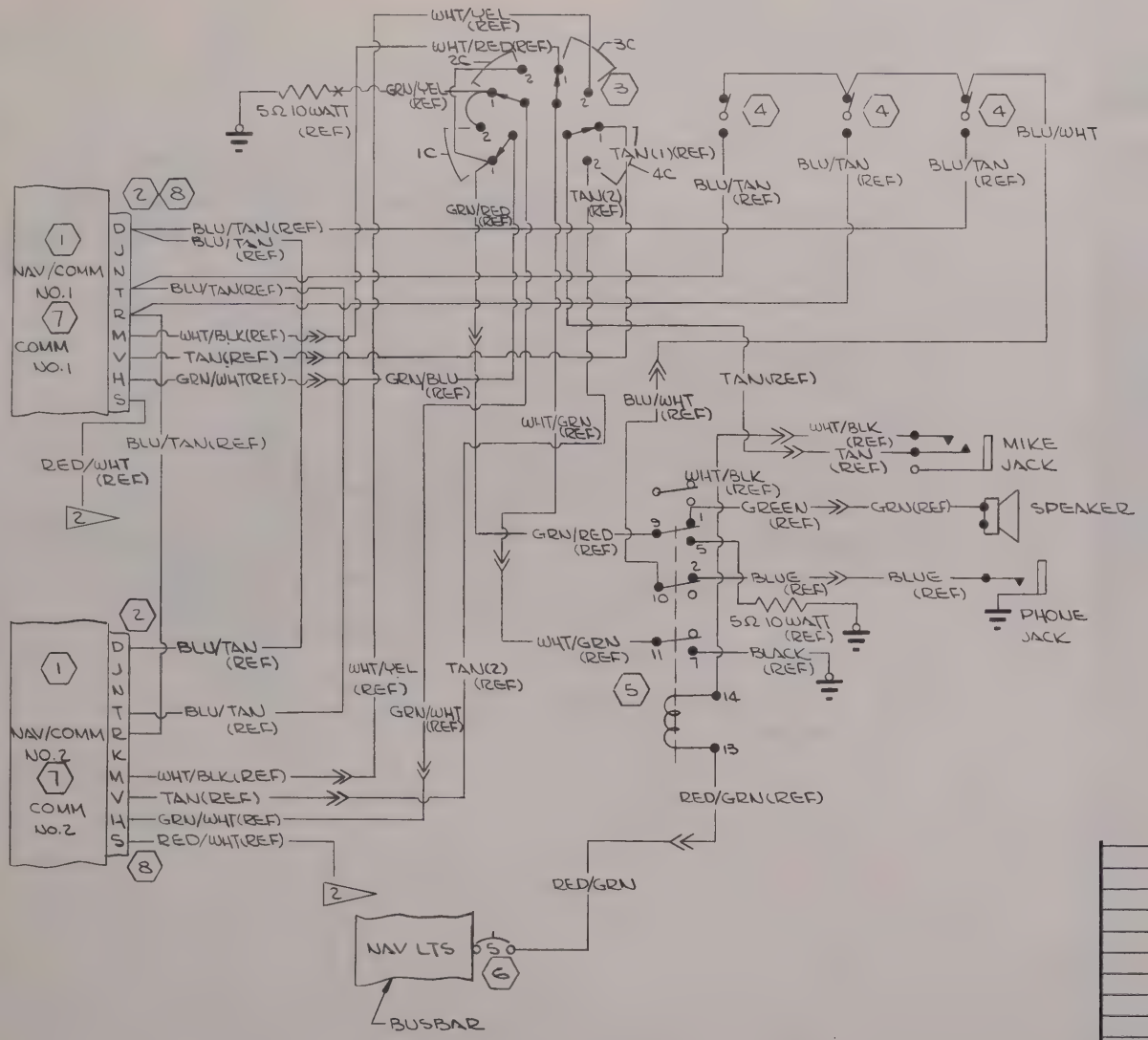


NOTES:

1. WIRE MATERIAL PER S-1460 UNLESS NOTED.
2. PIN S ON NO.1 NAV/COMM TO BE CONNECTED TO AUDIO AMP CKT BKR. PIN S ON NO.2 NAV/COMM TO BE CONNECTED TO NO.2 NAV/COMM CKT BREAKER

| WIRE CODE NO. | GA | MATERIAL | LG | TERMINALS | | | SERIALS |
|---|---|---|---|---|---|---|---|
| RED/GRN | 20 | -20-2-5 | | S-1367-1-6 | S-341-2 | | |
| BLU/WHT | 22 | -22-6-9 | | SOLDER | S-341-2 | | |

1 WIRE TABLE

| | | | |
|---|---|---|---|
| 8 | 29747-0018 | CONNECTOR (ARC) | |
| 7 | 31390-1128 | RCVR/XMTR | ARC TYPE RT-524A |
| 6 | S-1360-5 | CIRCUIT BREAKER | |
| 5 | -240 | CABLE ASSY | |
| 4 | MST-105E | SWITCH (AELM) | |
| 3 | -245 | CABLE ASSY | |
| 2 | 29747-0026 | CONNECTOR (ARC) | |
| 1 | 34640-1128 | RCVR/XMTR | ARC TYPE RT-515R |

CESSNA AIRCRAFT CO., COMMERCIAL AIRCRAFT DIVISION, WICHITA, KANSAS

| | NAME | DATE |
|---|---|---|
| DRAWN | HARDEN | 6-10-65 |
| GROUP | H. Wise | 6-15-65 |
| CHECK | R. Stuck | 6-16-65 |
| PROJ | [illegible] | 6-18-65 |

TITLE: WIRING DIAGRAM— AUDIO SYSTEM-DUAL NAV/COMM 300R & COMM 300

Cessna.

DWG NO: 15-70001

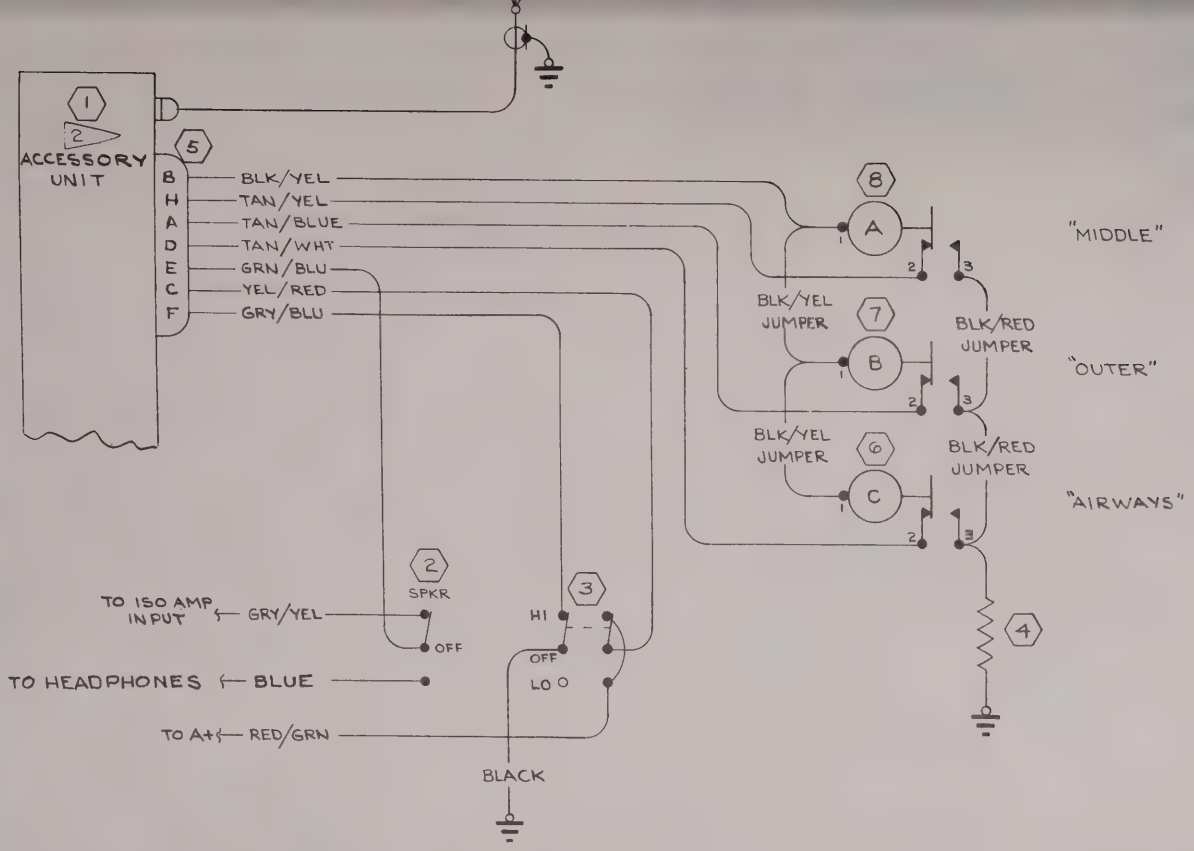


NOTES:

1. WIRE MATERIAL PER S-1460.
2. REFER TO PAGE 2.22.1 FOR WIRING OF ACCESSORY UNIT TO PANEL UNIT.

| ITEM NO | PART NO. | DESCRIPTION | INSTALLED ON |
|---|---|---|---|
| 8 | MS25041-4-328 | LIGHT ASSY | |
| 7 | MS25041-10-328 | LIGHT ASSY | |
| 6 | MS25041-1-328 | LIGHT ASSY | |
| 5 | 28371-0007 | CONNECTOR | (ARC) |
| 4 | 40Ω 3 WATT | RESISTOR (OM) | |
| 3 | MST-205P | SWITCH (AELM) | |
| 2 | MST-105E | SWITCH (AELM) | |
| 1 | 32980-0028 | ACCESS. UNIT (ARC TYPE RA-525A-1) | |

EQUIPMENT TABLE

| WIRE CODE NO. | GA | MATERIAL | LG | TERMINALS | | SERIALS |
|---|---|---|---|---|---|---|
| BLUE | 22 | -22-6 | | SOLDER | | |
| BLACK | 22 | -22-0 | | | S-13671-8 | |
| RED/GRN | 20 | -20-2-5 | | | | |
| GRY/YEL | 22 | -22-8-4 | | | | |
| GRY/BLU | 22 | -22-8-6 | | | SOLDER | |
| YEL/RED | 20 | -20-4-2 | | | | |
| GRN/BLU | 20 | -20-5-6 | | | | |
| TAN/WHT | 22 | -22-10-9 | | | | |
| TAN/BLU | 22 | -22-10-6 | | | | |
| TAN/YEL | 22 | -22-10-4 | | | | |
| BLK/YEL | 22 | -22-0-4 | | SOLDER | SOLDER | |

1 WIRE TABLE

CESSNA AIRCRAFT CO. COMMERCIAL AIRCRAFT DIVISION WICHITA, KANSAS

| | NAME | DATE |
|---|---|---|
| DRAWN | Ackerson | 5-13-65 |
| GROUP | R. Wise | 5-19-65 |
| CHECK | R. Stuck | 5-19-65 |
| PROJ | [illegible] | 5-26-65 |

TITLE: WIRING DIAGRAM— MARKER BEACON CESSNA NAV/OMNI 300 (ARC TYPE 525A)

Cessna.

DWG NO: 1570001

SUPERSEDED BY: | SUPERSEDES: | MODEL: 337 | REV: A | PAGE: 2.48.1

FORM NO 80-1613

(SR4697)

| CHG LET | REVISION | BY / DATE | CHK / APPD |
|---|---|---|---|
| | | | |

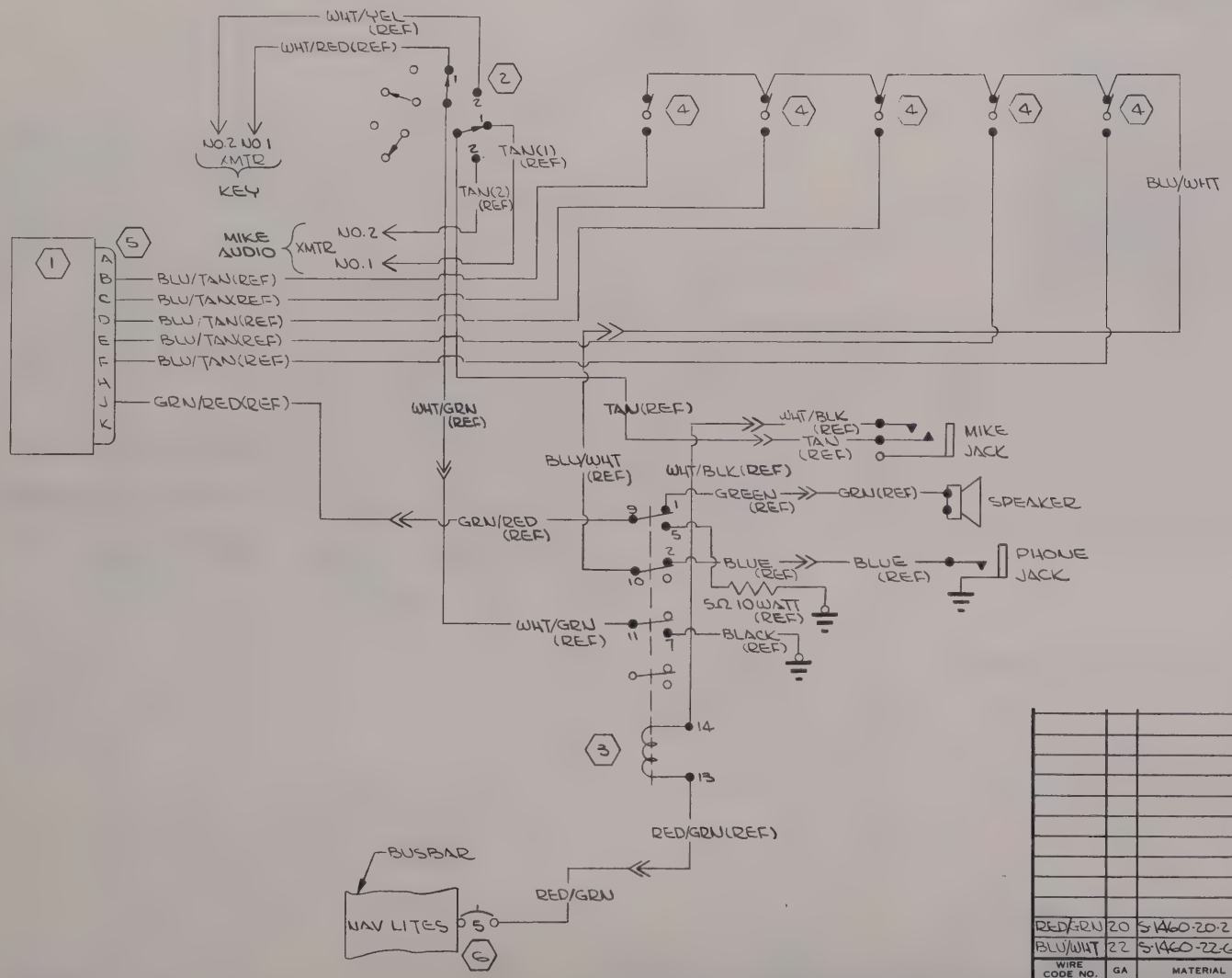


Inactive
337-0240 & ON
10-15-65
10-15-65
RRS

| WIRE CODE NO. | GA | MATERIAL | LG | TERMINALS | | | SERIALS |
|---|---|---|---|---|---|---|---|
| RED/GRN | 20 | S-1460-20-2-5 | | S-1367-1-6 | S-341-2 | | |
| BLU/WHT | 22 | S-1460-22-6-9 | | SOLDER | S-341-2 | | |

WIRE TABLE

| | | | |
|---|---|---|---|
| 6 | S-1360-5 | CIRCUIT BREAKER | |
| 5 | 126-222 | CONNECTOR(AMBE) | |
| 4 | MST-105E | SWITCH(AELM) | |
| 3 | -240 | CABLE ASSY | |
| 2 | -247 | CABLE ASSY | |
| 1 | KA-11 | ISO. AMPLIFIER | |

CESSNA AIRCRAFT CO., COMMERCIAL AIRCRAFT DIVISION, WICHITA, KANSAS

| | NAME | DATE |
|---|---|---|
| DRAWN | HARDEN | 6-11-65 |
| GROUP | H. Wise | 6-15-65 |
| CHECK | R. Stuck | 6-16-65 |
| PROJ | [illegible] | 6-18-65 |

TITLE: WIRING DIAGRAM— AUDIO SYSTEM - NARCO & KING

Cessna.

DWG NO: 1570001

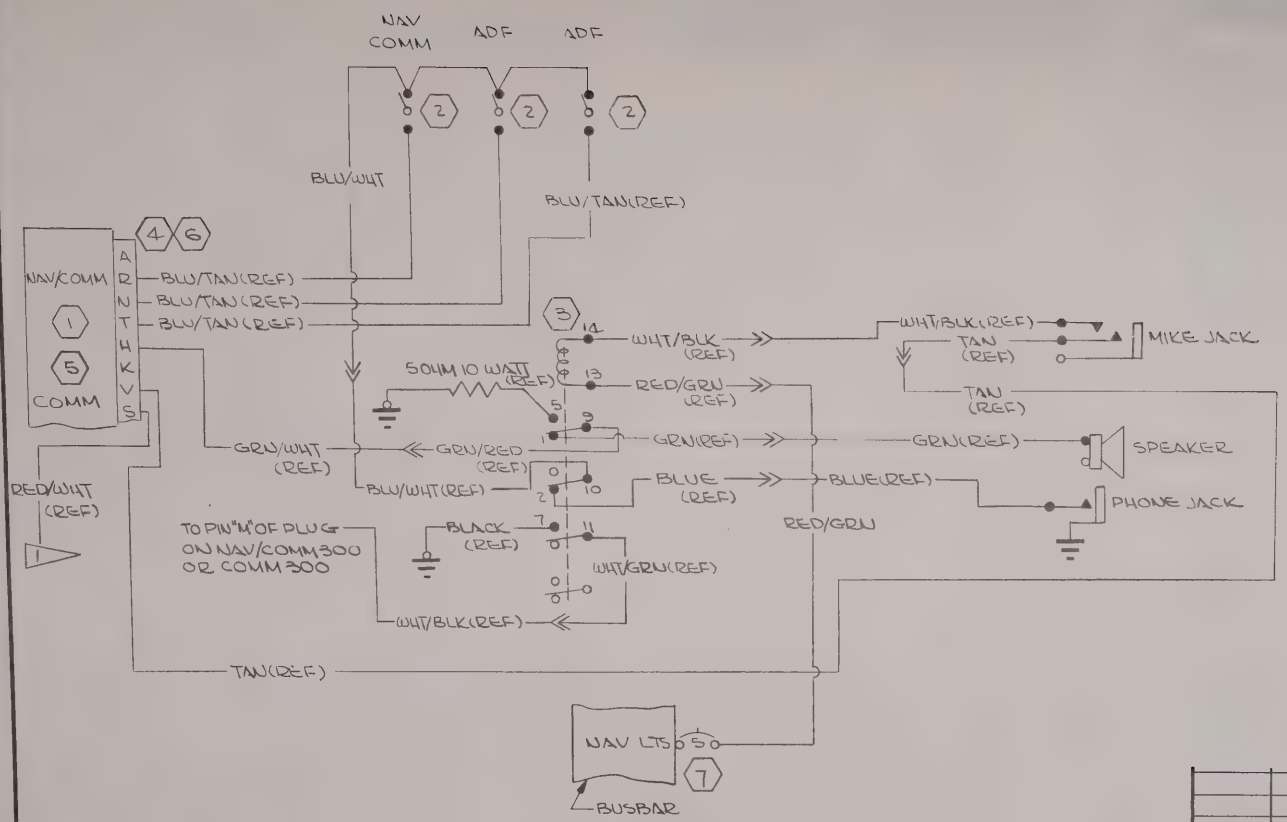


NOTES:

1. PIN "S" ON NAV/COMM TO BE CONNECTED TO AUDIO AMP CIRCUIT BREAKER

| ITEM NO | PART NO. | DESCRIPTION | INSTALLED ON |
|---|---|---|---|
| 7 | S-1360-5 | CIRCUIT BREAKER | |
| 6 | 29747-0018 | CONNECTOR(ARC) | |
| 5 | 31390-1128 | RCVR/XMTR | ARC TYPE RT-524A |
| 4 | 29747-0026 | CONNECTOR(ARC) | |
| 3 | -240 | CABLE ASSY | |
| 2 | MST-105E | SWITCH(AELM) | |
| 1 | 34640-1128 | RCVR/XMTR | ARC TYPE RT-515R |

EQUIPMENT TABLE

| WIRE CODE NO. | GA | MATERIAL | LG | TERMINALS | | | SERIALS |
|---|---|---|---|---|---|---|---|
| RED/GRN | 20 | S-1460-20-2-5 | | S-1367-1-6 | S-341-2 | | |
| BLU/WHT | 22 | S-1460-22-6-9 | | SOLDER | S-341-2 | | |

WIRE TABLE

CESSNA AIRCRAFT CO., COMMERCIAL AIRCRAFT DIVISION, WICHITA, KANSAS

| | NAME | DATE |
|---|---|---|
| DRAWN | HARDEN | 5-25-65 |
| GROUP | H. Wire | 6-15-65 |
| CHECK | R. Stuck | 6-16-65 |
| PROJ | [illegible] | 6-18-65 |

TITLE: WIRING DIAGRAM— AUDIO SYSTEM-SINGLE NAV/COMM300R-COMM300 (ARC TYPE 515R & 524A

Cessna®

DWG NO: 1570001

SUPERSEDED BY:

SUPERSEDES: 1570001 PG2.17.1

MODEL: 337A

REV:

PAGE: 2.50

FORM NO. 80-161A

(SR4697)

| CHG LET | REVISION | BY / DATE | CHK / APPD |
|---|---|---|---|
| | | | |

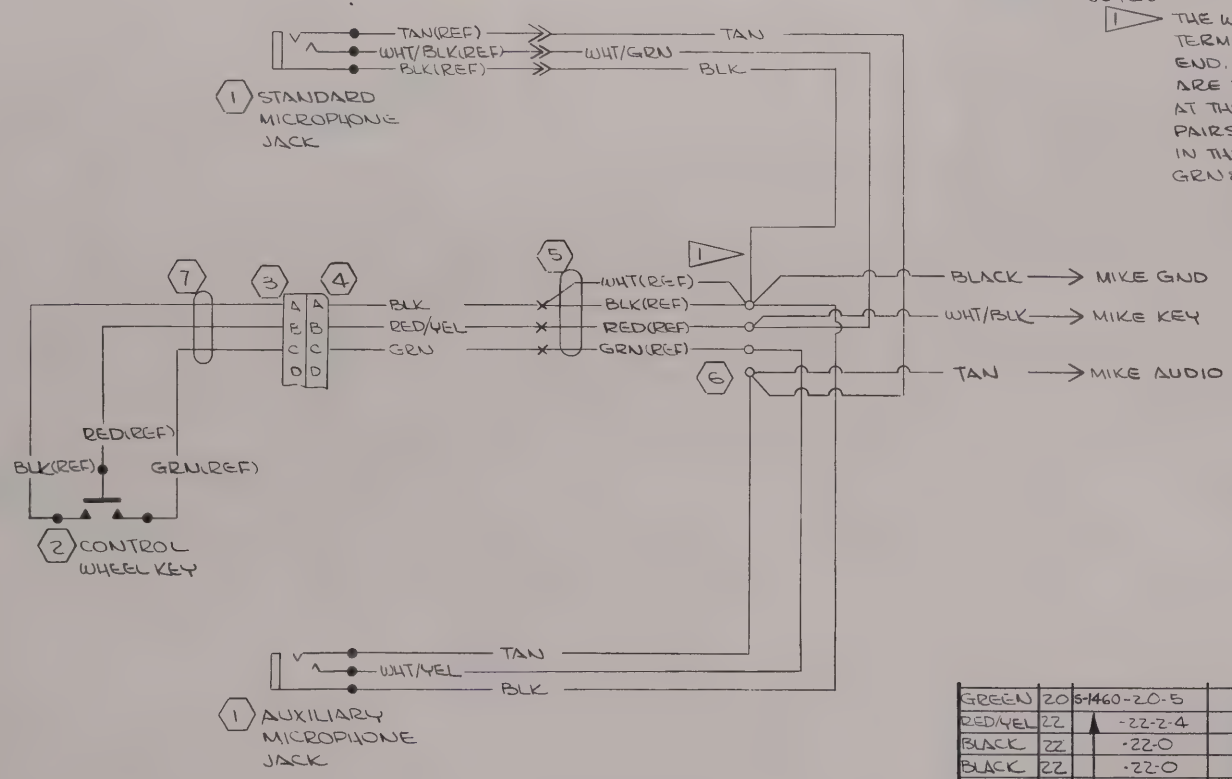


NOTES:

1. THE WHT & BLACK WIRES OF 8409 CABLE TERMINATE IN THE SAME TERMINAL AT EACH END. THE ENDS AT THE TERMINAL BLOCK ARE TO BE TERMINATED IN A S1367-1-6 AT THE TERMINAL BLOCK THE FOLLOWING PAIRS OF WIRES ARE TO BE TERMINATED IN THE SAME TERMINAL: RED & WHT/GRN, GRN & WHT/YEL

| WIRE CODE NO. | GA | MATERIAL | LG | TERMINALS | | SERIALS |
|---|---|---|---|---|---|---|
| GREEN | 20 | S-1460-20-5 | | SOLDER | S1557-1 | |
| RED/YEL | 22 | -22-2-4 | | SOLDER | S1557-1 | |
| BLACK | 22 | -22-0 | | S1367-1-6 | S-341-2 | |
| BLACK | 22 | -22-0 | | SOLDER | S1367-1-6 | |
| BLACK | 22 | -22-0 | | S-341-2 | S1367-1-6 | |
| BLACK | 22 | -22-0 | | SOLDER | S1557-1 | |
| WHT/GRN | 22 | -22-3-5 | | S-341-2 | S1367-1-6 | |
| WHT/BLK | 22 | -22-3-0 | | S1367-1-6 | S-341-2 | |
| WHT/YEL | 22 | -22-3-4 | | SOLDER | S1367-1-6 | |
| TAN | 22 | -22-10 | | S1367-1-6 | S-341-2 | |
| TAN | 22 | -22-10 | | S-341-2 | S1367-1-6 | |
| TAN | 22 | S-1460-22-10 | | SOLDER | S1367-1-6 | |

WIRE TABLE

| | | | |
|---|---|---|---|
| 7 | 8443 | CABLE(BDN) | |
| 6 | AN3436-2-4 | TERMINAL BLOCK | |
| 5 | 8409 | RETRACTILE CABLE(BDN) | |
| 4 | MSS-LRN | RECP (W/ID) | |
| 3 | MSP-LS | PLUG(W/ID) | |
| 2 | A8002 | SWITCH (HETH) | |
| 1 | S-1102-1 | JACK | |

CESSNA AIRCRAFT CO., COMMERCIAL AIRCRAFT DIVISION, WICHITA, KANSAS

| | NAME | DATE |
|---|---|---|
| DRAWN | HARDEN | 8-24-65 |
| GROUP | H. Wise | 8-25-65 |
| CHECK | R. Tyck | 8-26-65 |
| PROJ | Johnson | 8-30-65 |

TITLE: WIRING DIAGRAM— AUXILIARY MICROPHONE JACK & CONTROL

Cessna.

DWG NO: 15-7002L

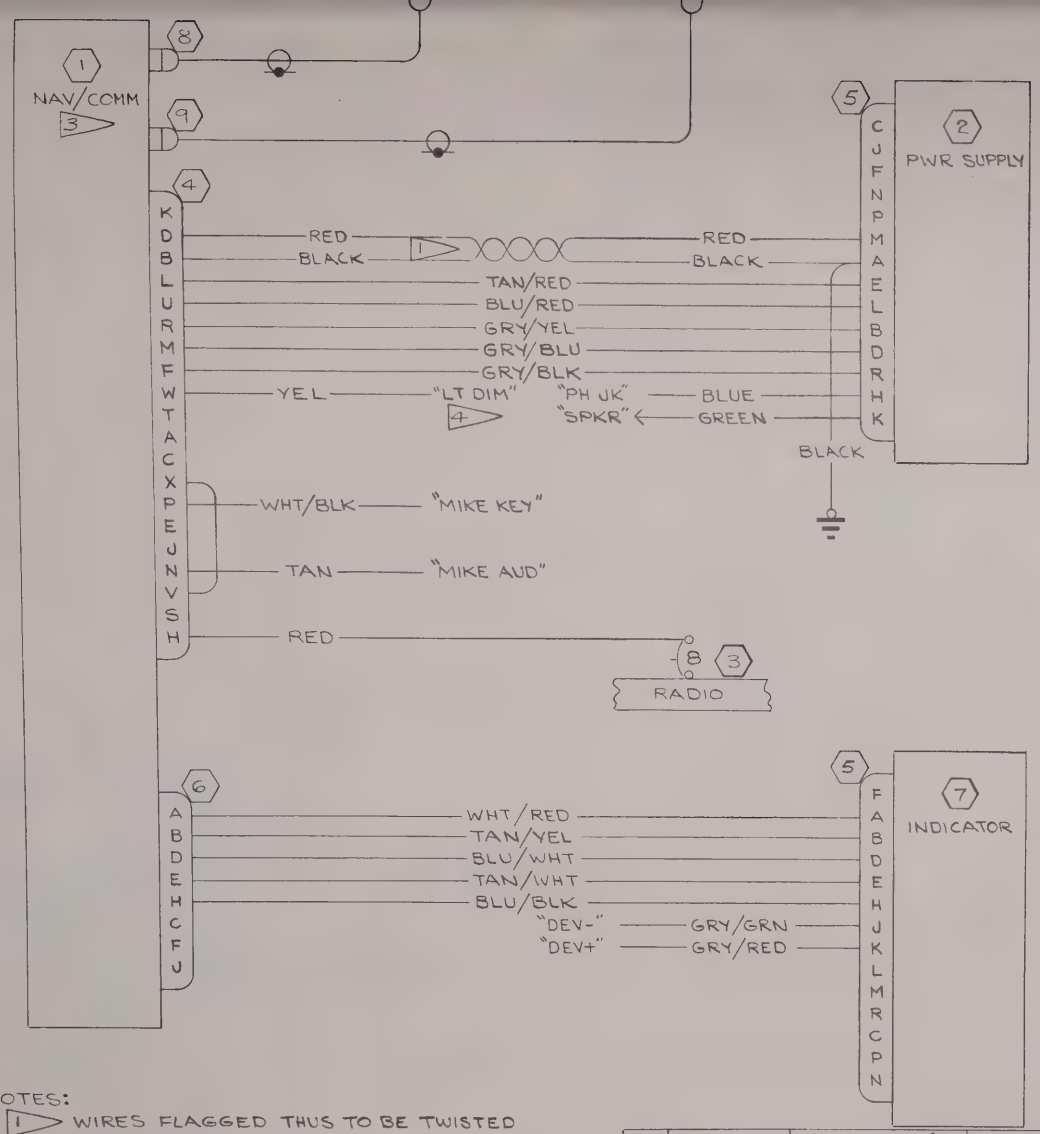


NOTES:

1. WIRES FLAGGED THUS TO BE TWISTED TOGETHER TO FORM A TWISTED PAIR.
2. WIRE MATERIAL PER S-1460.
3. THE KX-160E PANEL UNIT INCLUDES A 14 PIN CONNECTOR FOR DME CHANNELING THAT IS NOT SHOWN ON THIS DIAGRAM.
4. LIGHT DIMMING WIRE CONNECTS TO FLOOD LT DIM RHEOSTAT WITH STD LIGHTING. WHEN OPT POST LT IS INSTL CONNECT TO FLIGHT INSTR & RADIO DIAL LT DIM RHEOSTAT.

| ITEM NO | PART NO. | DESCRIPTION | INSTALLED ON |
|---|---|---|---|
| 9 | 030-0028-00 | CONNECTOR (KG | |
| 8 | 030-0005-00 | CONNECTOR (KG) | |
| 7 | KI-201 | INDICATOR (KG) | |
| 6 | 030-2044-00 | CONNECTOR (KG) | |
| 5 | 030-2000-00 | CONNECTOR (KG) | |
| 4 | 030-2002-00 | CONNECTOR (KG) | |
| 3 | S-1360-8 | CIRCUIT BKR | |
| 2 | KS-505 | POWER SUPPLY | (KG) |
| 1 | KX-160E | NAV/COMM UNIT | (KG) |

EQUIPMENT TABLE

| WIRE CODE NO. | GA | MATERIAL | LG | TERMINALS | | | SERIALS |
|---|---|---|---|---|---|---|---|
| GRY/RED | 22 | -22-8-2 | | SOLDER | S-1557-1 | | |
| GRY/GRN | 22 | -22-8-5 | | | S-1557-1 | | |
| BLU/BLK | 22 | -22-6-0 | | | SOLDER | | |
| TAN/WHT | 22 | -22-10-9 | | | | | |
| BLU/WHT | 22 | -22-6-9 | | | | | |
| TAN/YEL | 22 | -22-10-4 | | | | | |
| WHT/RED | 22 | -22-9-2 | | | SOLDER | | |
| | | | | | | | |
| RED | 16 | -16-2 | | | S-1367-2-6 | | |
| TAN | 22 | -22-10 | | | | | |
| WHT/BLK | 22 | -22-9-0 | | | | | |
| YELLOW | 18 | -18-4 | | | | | |
| BLACK | 22 | -22-0 | | | S-1367-1-8 | | |
| GREEN | 20 | -20-5 | | | S-341-2 | | |
| BLUE | 22 | -22-6 | | | | | |
| GRY/BLK | 22 | -22-8-0 | | | SOLDER | | |
| GRY/BLU | 22 | -22-8-6 | | | | | |
| GRY/YEL | 22 | -22-8-4 | | | | | |
| BLU/RED | 22 | -22-6-2 | | | | | |
| TAN/RED | 22 | -22-10-2 | | | | | |
| BLACK | 16 | -16-0 | | | | | |
| RED | 16 | -16-2 | | SOLDER | SOLDER | | |

2 WIRE TABLE

CESSNA AIRCRAFT CO., COMMERCIAL AIRCRAFT DIVISION, WICHITA, KANSAS

| | NAME | DATE |
|---|---|---|
| DRAWN | RIDDER | 6-21-65 |
| GROUP | Harden | 8-3-65 |
| CHECK | R. Huck | 8-4-65 |
| PROJ | [illegible] | 8-5-65 |

TITLE: WIRING DIAGRAM— KING KX-160E NAV/COM

Cessna®

DWG NO: 1570001

SUPERSEDED BY: | SUPERSEDES: | MODEL: 337 | REV: | PAGE: 2.52.1

(SR 4697)

| CHG LET | REVISION | BY DATE | CHK APPD |
|---|---|---|---|
| | | | |

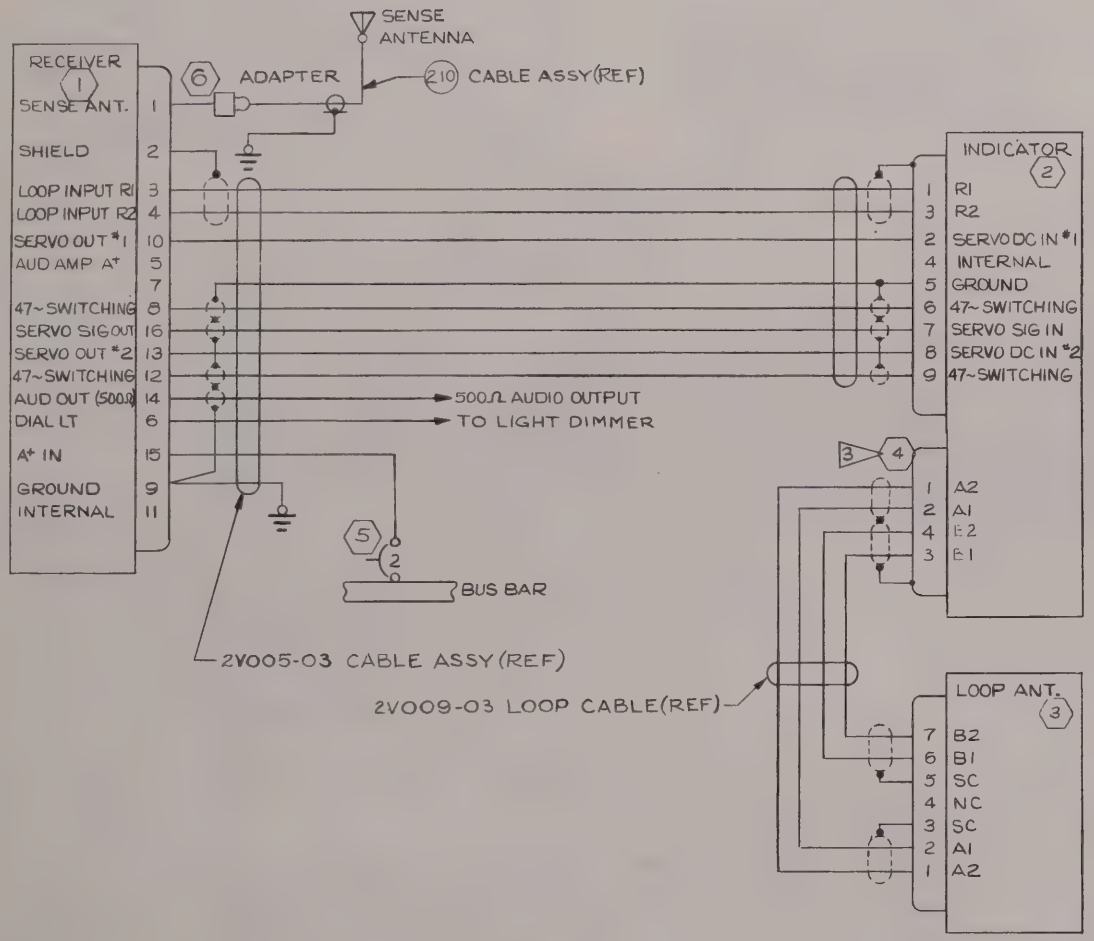


NOTES:

1. CONNECTIONS SHOWN ARE FOR TOP MOUNTED SENSE & BOTTOM MOUNTED LOOP ANTENNA.
2. ALL WIRES ARE VENDOR FURNISHED WITH INSTL KIT

3. (4) IS SUPPLIED LOOSE BY VENDOR & IS TO BE ATTACHED TO LOOP ANT. CABLE AS SHOWN. FLAGS ON WIRES INDICATE PIN NOS. ON LOOP ANT. END OF CABLE.

| | | | |
|---|---|---|---|
| 6 | UG-273/U | ADAPTER | |
| 5 | S-1360-2 | CIRCUIT BREAKER | |
| 3 4 | WK-4-21C-5/16 | PLUG (CED) | |
| 3 | 2321E | LOOP ANT. (BX) | |
| 2 | 551A | INDICATOR (BX) | |
| 1 | 201D | RCVR (BX) | |

| PART NO. | DESCRIPTION | INSTALLED ON |
|---|---|---|

| WIRE CODE NO. | GA | MATERIAL | LG | TERMINALS | | SERIALS |
|---|---|---|---|---|---|---|
| | | | | | | |

WIRE TABLE

CESSNA AIRCRAFT CO., COMMERCIAL AIRCRAFT DIVISION, WICHITA, KANSAS

| | NAME | DATE |
|---|---|---|
| DRAWN | ACKERSON | 8-2-65 |
| GROUP | [illegible] | 8-16-65 |
| CHECK | [illegible] | 8-17-65 |
| PROJ | [illegible] | 8-19-65 |

TITLE: WIRING DIAGRAM— BENDIX ADF-T-12C

Cessna

DWG NO: 1570001

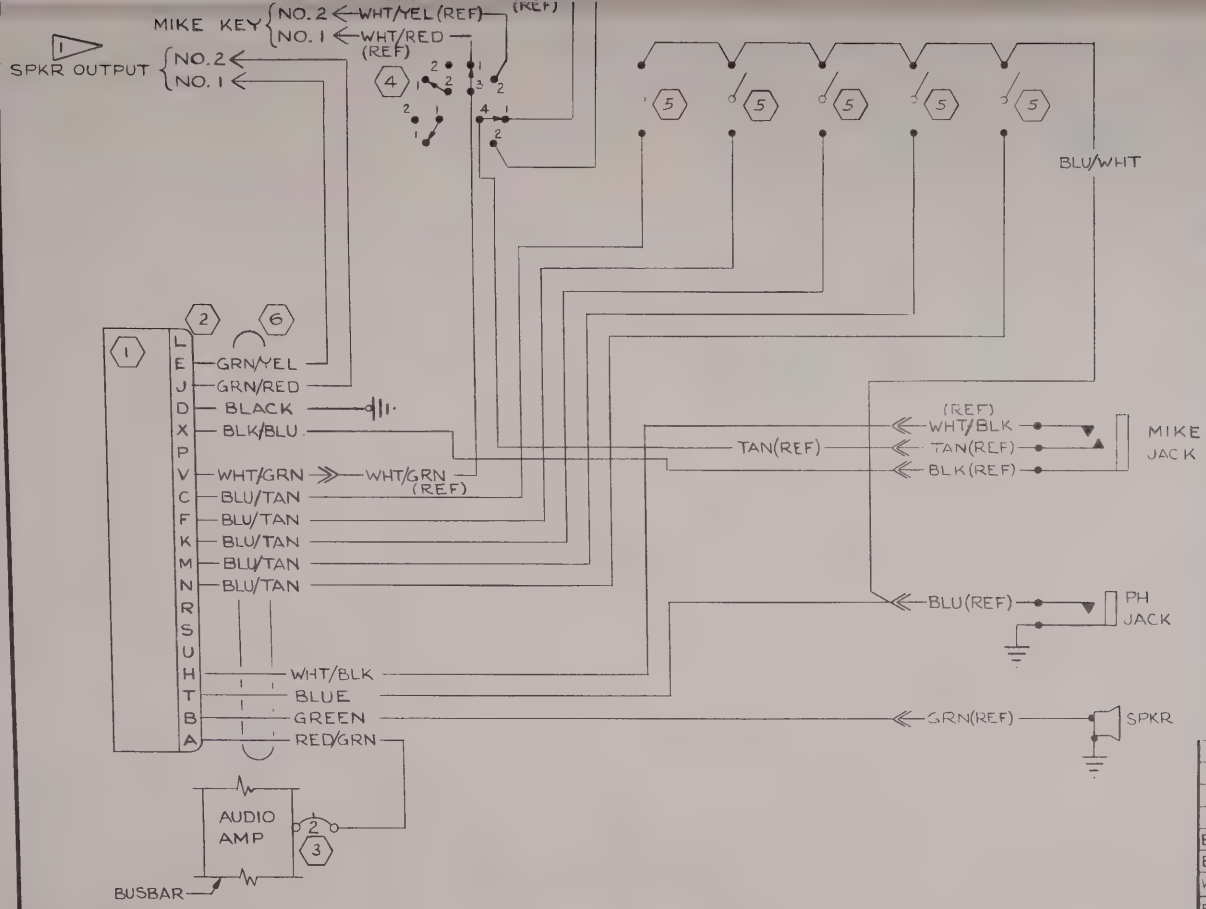


NOTES:

1. THESE CIRCUITS PROVIDE 4Ω 5 WATT DUMMY SPEAKER LOADS WHEN REQD.

| WIRE CODE NO. | GA | MATERIAL | LG | TERMINALS | | | SERIALS |
|---|---|---|---|---|---|---|---|
| BLU/WHT | 22 | S-1460-22-6-9 | | SOLDER | S-341-2 | | |
| BLUE | | -22-6 | | | | | |
| WHT/BLK | | -22-9-0 | | | S-341-2 | | |
| BLU/TAN | | -22-6-10 | | | SOLDER | | |
| BLU/TAN | | -22-6-10 | | | SOLDER | | |
| WHT/GRN | | -22-9-5 | | | S-341-2 | | |
| BLK/BLU | 22 | -22-0-6 | | | S-341-2 | | |
| BLACK | 18 | -18-0 | | | S-1367-1-8 | | |
| RED/GRN | 20 | -20-2-5 | | | S-1367-1-6 | | |
| GREEN | 20 | -20-5 | | | S-341-2 | | |
| GRN/RED | 20 | -20-5-2 | | | S-341-2 | | |
| GRN/YEL | 20 | S-1460-20-5-4 | | SOLDER | S-341-2 | | |

WIRE TABLE

| ITEM NO | PART NO. | DESCRIPTION | INSTALLED ON |
|---|---|---|---|
| 6 | -264 | CABLE ASSY | |
| 5 | MST-105E | SWITCH (AELM) | |
| 4 | -247 | CABLE ASSY | |
| 3 | S-1360-2 | CKT BKR | |
| 2 | 030-2002-00 | PLUG (KG) | |
| 1 | KA-25C | ISOLATION AMP (KG) | |

EQUIPMENT TABLE

CESSNA AIRCRAFT CO., COMMERCIAL AIRCRAFT DIVISION, WICHITA, KANSAS

| | NAME | DATE |
|---|---|---|
| DRAWN | Ackerson | 10-15-65 |
| GROUP | H Wise | 10-21-65 |
| CHECK | R. Stuck | 10-21-65 |
| PROJ | [illegible] | 10-22-65 |

TITLE: WIRING DIAGRAM— AUDIO SYSTEM- NARCO & KING

Cessna

DWG NO: 1570001

SUPERSEDED BY:

SUPERSEDES: 1570001 PG 2.39 & 2.49

MODEL: 337A

REV:

PAGE: 2.54.1

| CHG LET | REVISION | BY DATE | CHK APPD |
|---|---|---|---|
| | | | |

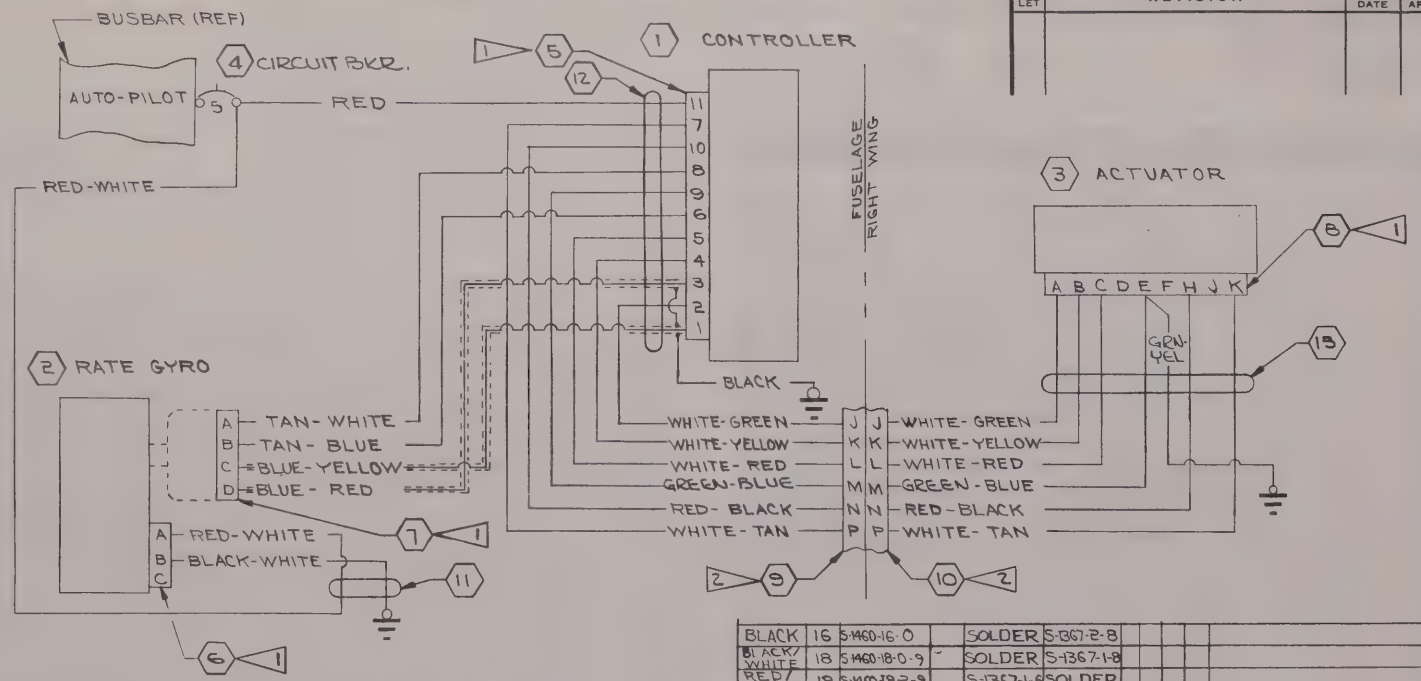


INACTIVE W.I.H.H. 12-8-65
EFF SER 337-0001 THRU (SR4925)

NOTES:
1. PLUGS ARE TO BE VENDOR SUPPLIED
2. THESE CONNECTORS ARE PART OF ELECTRICAL SYSTEM & ARE STANDARD IN THE AIRPLANE.

| ITEM NO | PART NO. | DESCRIPTION | INSTALLED ON |
|---|---|---|---|
| 13 | 1570041-1 | CABLE ASSY | |
| 12 | 1570041-3 | CABLE ASSY | |
| 11 | 1570041-4 | CABLE ASSY | |
| 10 | S-1371-20 | BLOCK ASSY | |
| 9 | S-1371-21 | BLOCK ASSY | |
| 8 | 28326-0009 | PLUG (ARC) | |
| 7 | 50328-0002 | PLUG (ARC) | |
| 6 | MS3106A10SL-3S | PLUG (ARC) | |
| 5 | 28336 | PLUG (ARC) | |
| 4 | S-1360-5 | CIRCUIT BKR | |
| 3 | 29510-0000 | ACTUATOR | ARC TYPE PA-31A ELECTRIC C-337A ARC TYPE ELEVATOR TRIM |
| 2 | 29520 | RATE GYRO | |
| 1 | 30340-1128 | CONTROLLER | |

EQUIPMENT TABLE

| WIRE COLOR | GA | MATERIAL | LG | TERMINALS | | SERIALS |
|---|---|---|---|---|---|---|
| BLACK | 16 | S-1460-16-0 | | SOLDER | S-1367-2-8 | |
| BLACK/WHITE | 18 | S-1460-18-0-9 | | SOLDER | S-1367-1-8 | |
| RED/WHITE | 18 | S-1460-18-2-9 | | S-1367-1-6 | SOLDER | |
| BLUE/YELLOW | 22 | S-1461-22-6-4 | | SOLDER | SOLDER | |
| WHITE/GREEN | 22 | S-1460-22-9-5 | | S-1371-1 | SOLDER | |
| WHITE/GREEN | 22 | S-1460-22-9-5 | | SOLDER | S-1371-2 | |
| BLUE/RED | 22 | S-1461-22-6-2 | | SOLDER | SOLDER | |
| WHITE/YELLOW | 22 | S-1460-22-9-4 | | S-1371-1 | SOLDER | |
| WHITE/YELLOW | 22 | S-1460-22-9-4 | | SOLDER | S-1371-2 | |
| WHITE/RED | 22 | S-1460-22-9-2 | | S-1371-1 | SOLDER | |
| WHITE/RED | 22 | S-1460-22-9-2 | | SOLDER | S-1371-2 | |
| TAN/BLUE | 22 | S-1460-22-10-6 | | SOLDER | SOLDER | |
| WHITE/TAN | 22 | S-1460-22-9-10 | | S-1371-1 | SOLDER | |
| WHITE/TAN | 22 | S-1460-22-9-10 | | SOLDER | S-1371-2 | |
| TAN/WHITE | 22 | S-1460-22-10-9 | | SOLDER | SOLDER | |
| GREEN/YELLOW | 20 | S-1460-20-5-4 | | SOLDER | S-1367-1-8 | |
| GREEN/BLUE | 20 | S-1460-22-5-6 | | S-1371-1 | SOLDER | |
| GREEN/BLUE | 20 | S-1460-22-5-6 | | SOLDER | S-1371-2 | |
| RED/BLACK | 18 | S-1460-18-2-0 | | S-1371-3 | SOLDER | |
| RED/BLACK | 18 | S-1460-18-2-0 | | SOLDER | S-1371-4 | |
| RED | 16 | S-1460-16-2 | | S-1367-1-6 | SOLDER | |

WIRE TABLE

CESSNA AIRCRAFT CO COMMERCIAL AIRCRAFT DIVISION, WICHITA, KANSAS

| | NAME | DATE |
|---|---|---|
| DRAWN | Ackerson | 12-22-64 |
| GROUP | | |
| CHECK | R. Stuck | 12-24-64 |
| PROJ | H. Wise | 12-23-64 |

TITLE: WIRING DIAGRAM — CESSNA NAV-O-MATIC 200 AUTOPILOT (OPTIONAL)

Cessna.

DWG NO. 1570000

| SUPERSEDED BY | SUPERSEDES | MODEL: 337 | REV: | PAGE: 14.2 |
|---|---|---|---|---|

FORM NO. 80-161

| CHG LET | REVISION | BY DATE | CHK APPD |
|---|---|---|---|
| | | | |

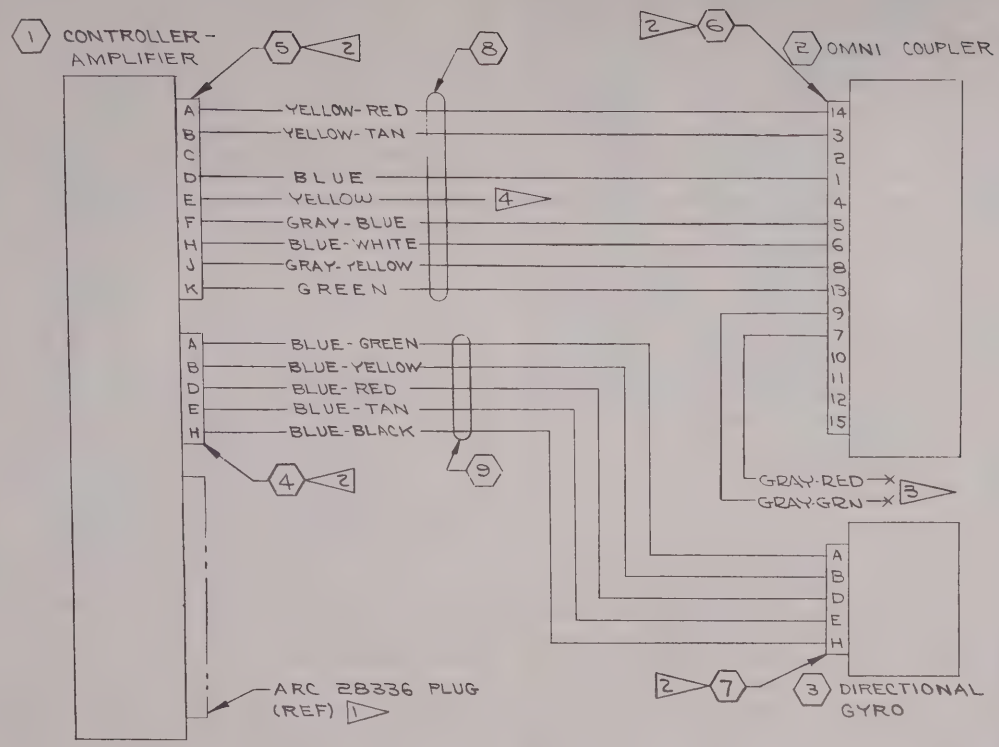


NOTES:

1. FOR WIRING TO THIS PLUG ON THE CONTROLLER-AMPLIFIER & TO THE ACTUATOR & RATE GYRO REFER TO PAGE 14.2
2. PLUGS ARE VENDOR FURNISHED.
3. GRAY-RED WIRE IS "DEV+" CIRCUIT & GRAY-GREEN WIRE IS "DEV-" CIRCUIT FOR CONNECTION TO VOR INDICATOR.
4. LIGHT DIMMING WIRE CONNECTS TO FLOOD LIGHT DIM. RHEOSTAT WITH STANDARD LIGHTING. WHEN OPT. POST LIGHTING IS INSTALLED, CONNECT TO FLIGHT INST & RADIO DIAL LIGHT DIMMING RHEOSTAT.

| ITEM NO | PART NO. | DESCRIPTION | INSTALLED ON |
|---|---|---|---|
| 9 | 1570041-5 | CABLE ASSY | |
| 8 | 1570041-6 | CABLE ASSY | |
| 7 | 28326-0005 | PLUG (ARC) | |
| 6 | 23410 | PLUG (ARC) | |
| 5 | 28371-0009 | PLUG (ARC) | |
| 4 | 28371-0005 | PLUG (ARC) | |
| 3 | 30370-0100 | DIR GYRO | ARC TYPE GE-20A |
| 2 | 28900 | OMNI COUPLER | ARC TYPE CA-51ZA |
| 1 | 28870-1228 | CONTROLLER | ARC TYPE C-554A-12 |

EQUIPMENT TABLE

| WIRE CODE OR PART NO | GA | MATERIAL OR NOMENCLATURE | LG | TERMINALS | | SERIALS |
|---|---|---|---|---|---|---|
| YELLOW | 20 | S-1460-20-4 | | SOLDER | | |
| BLUE/BLACK | 22 | S-1460-22-6-0 | | | SOLDER | |
| BLUE/TAN | 22 | S-1460-22-6-10 | | | | |
| BLUE/RED | 22 | S-1460-22-6-2 | | | | |
| BLUE/YELLOW | 22 | S-1460-22-6-4 | | | | |
| BLUE/GREEN | 22 | S-1460-22-6-5 | | | SOLDER | |
| GRAY/RED | 22 | S-1460-22-8-2 | | | S-1370-0 | |
| GRAY/GREEN | 22 | S-1460-22-8-5 | | | S-1370-0 | |
| GREEN | 20 | S-1460-20-5 | | | SOLDER | |
| GRAY/YELLOW | 22 | S-1460-22-8-4 | | | | |
| BLUE/WHITE | 22 | S-1460-22-6-9 | | | | |
| GRAY/BLUE | 22 | S-1460-22-8-6 | | | | |
| BLUE | 22 | S-1460-22-6 | | | | |
| YELLOW/TAN | 20 | S-1460-20-4-10 | | | | |
| YELLOW/RED | 20 | S-1460-20-4-2 | | SOLDER | SOLDER | |

WIRE TABLE

CESSNA AIRCRAFT CO., COMMERCIAL AIRCRAFT DIVISION, WICHITA, KANSAS

| | NAME | DATE |
|---|---|---|
| DRAWN | JICKERSON | 12-22-64 |
| GROUP | | |
| CHECK | R. Stuck | 12-24-64 |
| PROJ | J. Wise | 12-26-64 |

TITLE: WIRING DIAGRAM — CESSNA NAV-O-MATIC 300 AUTOPILOT (OPTIONAL)

Cessna.

DWG NO. 1570000

SUPERSEDED BY | SUPERSEDES | MODEL: 337 | REV: | PAGE: 14.3

FORM NO. 80-161

NOTES:
1. PLUGS ARE VENDOR FURNISHED
2. LITE DIMMER WIRE CONNECTS TO FLOOD LIGHT DIM. RHEO. WITH STD LIGHTING. WHEN POST LIGHTING IS INSTALLED CONNECT TO FLIGHT INST & RADIO DIAL LIGHT DIMMING RESISTOR
3. GRAY-RED WIRE IS "DEV+" CIRCUIT & GRAY-GREEN WIRE IS "DEV-" CIRCUIT FOR CONNECTION TO VOR INDICATOR.
4. WIRE MATL PER S-1460 UNLESS NOTED.

| CHG LET | REVISION | BY / DATE | CHK / APPD |
|---|---|---|---|
| A | ADDED "SOLDER" TO GRN/YEL WIRE DELETED FLAG NOTE 1 FROM S-1371-20 & S-1371-21 BLOCK ASSY. INACTIVATED DWG (SR4925) | WHH 12-8-60 | |

INACTIVE WHH 12-3-65
EFF SER 337-0001 THRU (SR4925)

| WIRE COLOR OR PART NO | GA | MATERIAL | TERMINALS | | SERIALS |
|---|---|---|---|---|---|
| GRN/YEL | 20 | -20-5-4 | SOLDER | S-1367-1-8 | |
| WHT/TAN | 22 | -22-9-10 | SOLDER | S-1371-2 | |
| WHT/BLU | ↕ | -22-5-6 | ↕ | ↕ | |
| WHT/RED | | -22-9-2 | | | |
| WHT/YEL | | -22-9-4 | | | |
| WHT/GRN | | -22-9-5 | | S-1371-2 | |
| TAN/WHT | | -22-10-9 | | SOLDER | |
| TAN/BLU | | -22-10-6 | | ↕ | |
| TAN/RED | ↓ | -22-10-2 | ↓ | ↕ | |
| TAN/YEL | 22 | -22-10-4 | ↓ | SOLDER | |
| RED | 18 | -18-2 | SOLDER | S-1367-1-6 | |

4 WIRE TABLE

| ITEM NO | PART NO. | DESCRIPTION | INSTALLED ON |
|---|---|---|---|
| 21 | 28326-0009 | PLUG (ARC) | |
| 20 | S-1371-20 | BLOCK ASSY | |
| 19 | S-1371-21 | BLOCK ASSY | |
| 18 | 28371-0009 | PLUG (ARC) | |
| 17 | 31683-0020 | PLUG (ARC) | |
| 16 | 28326-0007 | PLUG (ARC) | |
| 15 | 28371-0007 | PLUG (ARC) | |
| 14 | 1570041-2 | CABLE ASSY | |
| 13 | 1570041-10 | CABLE ASSY | |
| 12 | 1570041-9 | CABLE ASSY | |
| 11 | 1570041-8 | CABLE ASSY | |
| 10 | 1570041-7 | CABLE ASSY | |
| 9 | 1570041-5 | CABLE ASSY | |
| 8 | 1570041-1 | CABLE ASSY | |
| 7 | S-1360-5 | CIRCUIT BREAKER | |
| 6 | 29510-0400 | PITCH ACTUATOR | ARC TYPE CA-5120A |
| 5 | 29510-0000 | ROLL ACTUATOR | ARC TYPE CA-5120A |
| 4 | 30475-0000 | VERT GYRO | ARC TYPE G-5120A |
| 3 | 30370-0100 | DIR GYRO | ARC TYPE G-5120A |
| 2 | 30520-0028 | COMPUTER | ARC TYPE CA-5120A |
| 1 | 30510-1128 | CONTROLLER | ARC TYPE CA-5120A-11 |

EQUIPMENT TABLE

| WIRE COLOR | GA | MATERIAL | LG | TERMINALS | |
|---|---|---|---|---|---|
| GRN/GRN | 22 | -22-8-5 | | SOLDER | S-1370-0 |
| GRY/RED | 22 | -22-8-2 | | ↕ | S-1370-0 |
| GRN/YEL | 20 | -20-5-4 | | | S-1367-1-8 |
| WHT/BLK | 22 | -22-9-0 | | | S-1371-2 |
| WHT/BLK | 22 | -22-9-0 | | | S-1371-1 |
| RED/BLK | 18 | -18-2-0 | | | S-1371-2 |
| RED/BLK | 18 | -18-2-0 | | | S-1371-1 |
| BLK/BLU | 22 | -22-0-6 | | | S-1371-2 |
| WHT/RED | ↕ | -22-9-2 | | | S-1371-1 |
| BLK/BLU | | -22-0-6 | | ↕ | |
| WHT/YEL | | -22-9-4 | | | |
| WHT/GRN | | -22-9-5 | | | |
| WHT/BLU | | -22-9-6 | | ↕ | |
| WHT/TAN | ↕ | 22-9-10 | | | S-1371-1 |
| WHT/TAN | 22 | -22-9-10 | | | S-1371-2 |
| RED/BLK | 18 | -18-2-0 | | ↕ | |
| WHT/BLU | 22 | -22-9-6 | | | |
| WHT/RED | ↕ | -22-9-2 | | ↕ | |
| WHT/YEL | | -22-9-4 | | | |
| WHT/GRN | | -22-9-5 | | | S-1371-2 |
| WHT/RED | ↕ | -22-9-2 | | | SOLDER |
| BLU/TAN | 22 | -22-6-10 | | ↕ | |
| RED/WHT | 18 | -18-2-9 | | | |
| WHT/BLK | 22 | -22-9-0 | | | |
| BLU/WHT | 22 | -22-6-9 | | | |
| YELLOW | 20 | -20-4 | | | |
| RED/BLK | 18 | -18-2-0 | | | |
| TAN/WHT | 22 | -22-10-9 | | | |
| BLU/GRN | ↕ | -22-6-5 | | | |
| TAN/BLU | | -22-10-6 | | | |
| TAN/RED | | -22-10-2 | | | |
| BLU/YEL | | -22-6-4 | | | |
| TAN/YEL | | -22-10-4 | | | |
| BLU/RED | | -22-6-2 | | | |
| BLU/BLK | | -22-6-0 | | | |
| TAN | ↓ | -22-10 | | ↕ | |
| BLUE | 22 | -22-6 | | SOLDER | SOLDER |

4 WIRE TABLE

CESSNA AIRCRAFT CO COMMERCIAL AIRCRAFT DIVISION, WICHITA, KANSAS

| | NAME | DATE |
|---|---|---|
| DRAWN | HARDEN | 12-23-64 |
| GROUP | | |
| CHECK | R. Stuck | 12-24-64 |
| PROJ | H. Wise | 12-28-64 |

TITLE: WIRING DIAGRAM — CESSNA NAV-O-MATIC 400 AUTOPILOT (OPTIONAL)

Cessna.

DWG NO. 1570000

REV A

PAGE 14.4.0

SUPERSEDED BY —

SUPERSEDES

MODEL 337

FORM NO. 80-161

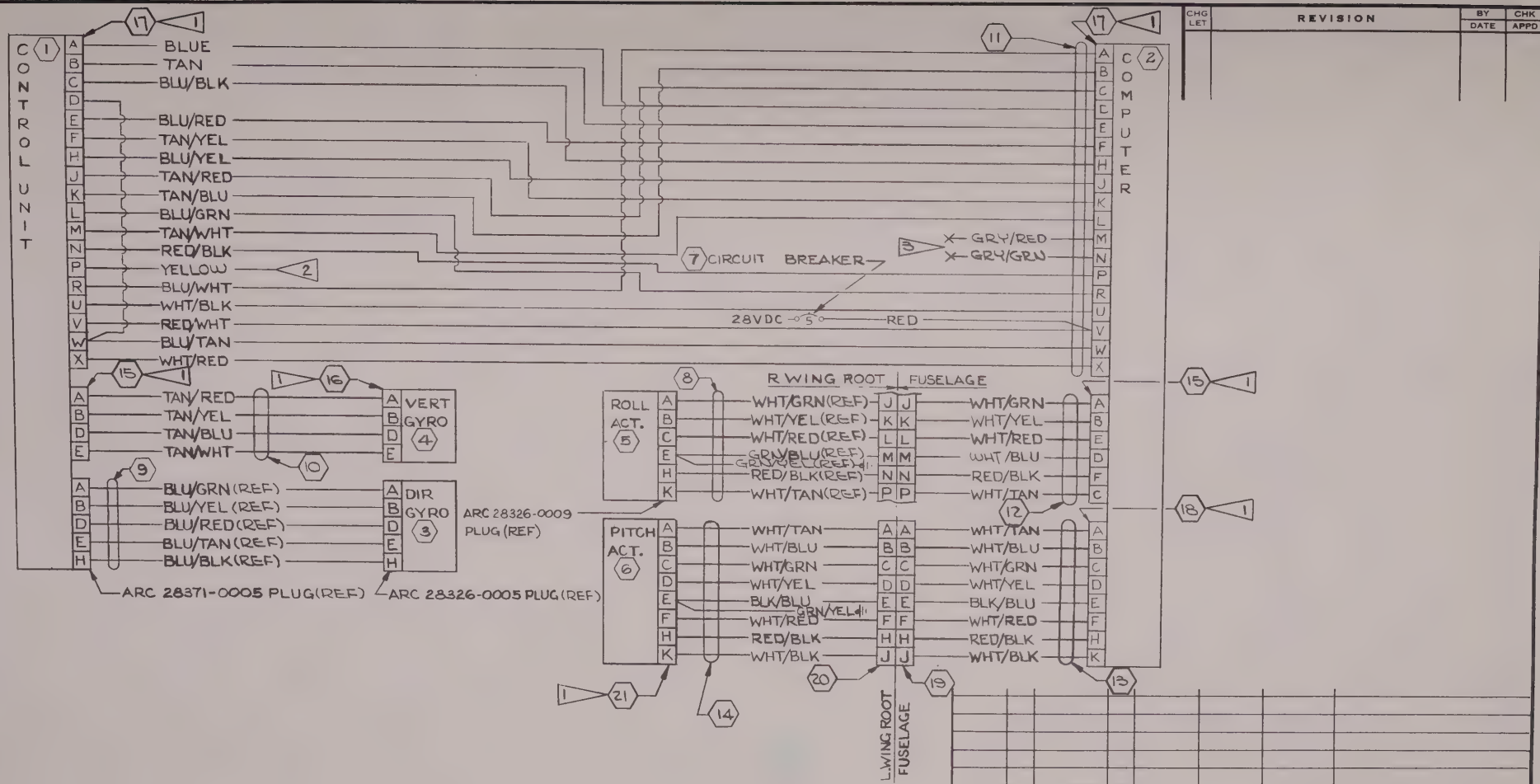


| CHG LET | REVISION | BY DATE | CHK APPD |
|---|---|---|---|

| WIRE CODE NO. | GA | MATERIAL | LG | TERMINALS | SERIALS |
|---|---|---|---|---|---|

WIRE TABLE

| ITEM NO | PART NO. | DESCRIPTION | INSTALLED ON |
|---|---|---|---|

EQUIPMENT TABLE

CESSNA AIRCRAFT CO., COMMERCIAL AIRCRAFT DIVISION, WICHITA, KANSAS

| | NAME | DATE |
|---|---|---|
| DRAWN | HARDEN | 12-23-69 |
| GROUP | | |
| CHECK | R. Stuck | 12-24-69 |
| PROJ | H. Nino | 12-29-69 |

TITLE: WIRING DIAGRAM — CESSNA NAV-O-MATIC 400 AUTOPILOT (OPTIONAL)

Cessna.

DWG NO: 1570000

SUPERSEDED BY: | SUPERSEDES: | MODEL: 337 | REV: | PAGE: 14.4.1

# SECTION XIV

# NUMERICAL INDEX

| PART NUMBER | FIGURE AND INDEX NO. |
|---|---|
| A-13B | 8-2- 40 |
| A-13B | 8-2- 42 |
| A-13B | 8-2- 44 |
| A-374A | 10-5- 16 |
| A-46213-001 | 7-2- 40 |
| A-46213-001 | 7-3- 36 |
| A-46213-001 | 7-4- 35 |
| AC-10-28C | 7-6- 15 |
| AGA-2 | 6-7- |
| AGA-2 | 6-8- |
| AGA-2 | 6-9- |
| AGA-2 | 6-10- |
| AGA-2 | 6-11- |
| AMP-31882 | 7-4- |
| AMP-31882 | 5-1- |
| AMP-31882 | 7-2- |
| AMP-31888 | 7-4- |
| AMP-31888 | 7-1- |
| AMP-31888 | 7-2- |
| AMP-31888 | 7-3- |
| AMP-31889 | 3-2- |
| AMP-31889 | 3-2- |
| AMP-31889 | 5-1- |
| AMP-31889 | 5-4- |
| AMP-31889 | 5-4- |
| AMP-31902 | 3-2- |
| AMP-31902 | 3-2- |
| AMP-31902 | 5-1- |
| AMP-31902 | 5-4- |
| AMP-31902 | 5-4- |
| AMP-31902 | 7-1- |
| AMP-31905 | 5-1- |
| AMP165-10 | 7-5- |
| AMP22-18 | 5-1- |
| AMP31889 | 3-1- |
| AMP31902 | 3-1- |
| AM515-8R6 | 3-1- 22 |
| AN100-3 | 8-5- 3 |
| AN100-3 | 8-6- 8 |
| AN100-3 | 8-6- 17 |
| AN1495-6 | 2-3D- 42 |
| AN155-16S | 2-3- 36 |
| AN155-16S | 2-3A- 37 |
| AN155-16S | 2-3B- 41 |
| AN155-16S | 2-3C- 42 |
| AN155-16S | 2-3C- |
| AN155-16S | 2-3E- 36 |
| AN155-16S | 2-14- 18 |
| AN155-16S | 2-15- 28 |
| AN155-16S | 2-16- 13 |
| AN155-16S | 2-17- 13 |
| AN155-16S | 2-18- 32 |
| AN155-168 | 2-13- 46 |
| AN155-168 | 2-14- 42 |
| AN155-168 | 2-15- 37 |
| AN155B16S | 2-3D- 30 |
| AN155B16S | 2-16- 27 |
| AN155B16S | 2-17- 27 |
| AN161-16LS | 2-3E- 37 |
| AN161-16LS | 2-18- 31 |
| AN21-9 | 2-3D- |
| AN21-9 | 2-3D- |
| AN21-9 | 2-3D- 32 |
| AN21-9 | 2-16- |
| AN21-9 | 2-16- |
| AN21-9 | 2-16- |
| AN21-9 | 2-17- |
| AN21-9 | 2-17- |
| AN21-9 | 2-17- |
| AN23-10 | 2-14- 11 |
| AN23-10 | 2-14- 15 |
| AN23-10 | 2-16- 10 |
| AN23-10 | 2-16- 15 |
| AN23-10 | 2-17- 10 |
| AN23-10 | 2-17- 15 |

| PART NUMBER | FIGURE AND INDEX NO. |
|---|---|
| AN23-12 | 2-13- 16 |
| AN23-8 | 2-13- 23 |
| AN24-14 | 2-14- 20 |
| AN24-14 | 2-15- 18 |
| AN24-15 | 2-15- 22 |
| AN3-10A | 2-18- 45 |
| AN3-10A | 2-18- 55 |
| AN3-12A | 2-3E- 33 |
| AN3-12A | 2-18- 18 |
| AN3-3A | 2-16- 20 |
| AN3-3A | 2-17- 20 |
| AN3-3A | 2-18- 59 |
| AN3-4A | 2-3- 26 |
| AN3-4A | 2-3A- 25 |
| AN3-4A | 2-3B- 29 |
| AN3-4A | 2-3C- 26 |
| AN3-4A | 2-3D- 26 |
| AN3-4A | 2-5- 50 |
| AN3-4A | 2-5- |
| AN3-4A | 2-13- 39 |
| AN3-4A | 2-14- 39 |
| AN3-4A | 2-15- |
| AN3-4A | 2-15- 30 |
| AN3-4A | 2-16- 7 |
| AN3-4A | 2-16- |
| AN3-4A | 2-17- 7 |
| AN3-4A | 2-17- |
| AN3-4A | 9-3- 30 |
| AN3-5A | 2-18- 49 |
| AN3-7 | 2-3E- 38 |
| AN3-7 | 2-18- 27 |
| AN3-7A | 2-18- 71 |
| AN3020-12 | 5-6- 29 |
| AN3027-7 | 7-1- 37 |
| AN3057-12 | 1-2- |
| AN3057-12 | 1-4- |
| AN3057-12 | 2-5- |
| AN3057-12 | 2-7- |
| AN3057-12 | 5-4- |
| AN3057-12 | 5-4- |
| AN3057-12 | 5-6- 28 |
| AN3057-6 | 1-3- |
| AN3057-6 | 2-6- |
| AN310-C3 | 2-3E- 40 |
| AN310-C3 | 2-18- 29 |
| AN310-3 | 2-13- 17 |
| AN310-3 | 2-13- 24 |
| AN310-3 | 2-14- 12 |
| AN310-3 | 2-14- 16 |
| AN310-3 | 2-16- 11 |
| AN310-3 | 2-16- 16 |
| AN310-3 | 2-17- 11 |
| AN310-3 | 2-17- 16 |
| AN310-4 | 2-14- 21 |
| AN3106A14S2S | 2-1- |
| AN3106A14S6S | 1-3- |
| AN3106A14S6S | 2-6- |
| AN3106A20-27S | 1-2- |
| AN3106A20-27S | 1-4- |
| AN3106A20-27S | 2-5- |
| AN3106A20-27S | 2-7- |
| AN3108-14S2S | 1-3- |
| AN3108-14S2S | 2-6- |
| AN320-1 | 2-3D- |
| AN320-1 | 2-3D- |
| AN320-1 | 2-3D- |
| AN320-1 | 2-16- |
| AN320-1 | 2-16- |
| AN320-1 | 2-16- |
| AN320-1 | 2-17- |
| AN320-1 | 2-17- |
| AN320-1 | 2-17- |
| AN320-4 | 2-15- 19 |
| AN320-4 | 2-15- 23 |
| AN3226-3 | 9-1- 9 |

| PART NUMBER | FIGURE AND INDEX NO. |
|---|---|
| AN340-B6 | 9-4- 52 |
| AN340-3 | 9-1- 53 |
| AN340-3 | 9-1- |
| AN340-3 | 9-1- |
| AN340-3 | 4-1- |
| AN340-8 | 2-2- 73 |
| AN340-8 | 2-4- 60 |
| AN340-8 | 2-5- 83 |
| AN340B8 | 2-3- 15 |
| AN340B8 | 2-3A- 14 |
| AN340B8 | 2-3B- 18 |
| AN340B8 | 2-3C- 15 |
| AN340B8 | 2-3D- 15 |
| AN340B8 | 5-3- 33 |
| AN340B8 | 5-3- |
| AN340B8 | 5-8- 15 |
| AN340B8 | 5-8- |
| AN345-10 | 8-2- 25 |
| AN363-832 | 2-3E- 46 |
| AN380-2-2 | 2-3A- |
| AN380-2-2 | 2-3A- 42 |
| AN380-2-2 | 2-3B- |
| AN380-2-2 | 2-3B- 46 |
| AN380-2-2 | 2-3C- 41 |
| AN380-2-2 | 2-3C- |
| AN4-10A | 2-3- 43 |
| AN4-10A | 2-3A- 30 |
| AN4-10A | 2-3B- 34 |
| AN4-10A | 2-3C- 31 |
| AN4-10A | 2-13- 29 |
| AN4-10A | 2-13- 50 |
| AN4-10A | 2-14- 50 |
| AN4-10A | 2-15- 41 |
| AN4-4A | 6-1- 4 |
| AN4-4A | 6-9- 19 |
| AN4-4A | 7-2- 3 |
| AN472D4 | 7-2- 20 |
| AN500-8-16 | 3-4- 3 |
| AN507-1032R | 2-16- |
| AN507-1032R | 2-17- |
| AN507-1032R5 | 2-13- 70 |
| AN507-1032R6 | 2-14- 70 |
| AN507-1032R6 | 2-15- 60 |
| AN507-1032R6 | 2-18- 83 |
| AN507-1032R8 | 2-3E- |
| AN507-440R4 | 7-6- 13 |
| AN507-440R6 | 6-1- 47 |
| AN507-440R6 | 6-3- 49 |
| AN507-440R6 | 6-5- 42 |
| AN507-440R6 | 6-7- 57 |
| AN507-440R6 | 6-8- 70 |
| AN507-440R6 | 6-9- 48 |
| AN507-440R6 | 6-10- 40 |
| AN507-440R6 | 6-11- 40 |
| AN507-440R6 | 7-2- 57 |
| AN507-440R6 | 7-3- 59 |
| AN507-440R6 | 7-4- 58 |
| AN507-440R6 | 7-5- 22 |
| AN507-632R10 | 2-3E- 48 |
| AN507-632R10 | 2-13- 87 |
| AN507-632R20 | 2-3- 3 |
| AN507-632R20 | 2-3A- 2 |
| AN507-632R20 | 2-3C- 2 |
| AN507-632R20 | 2-3D- 2 |
| AN507-632R20 | 2-15- 3 |
| AN507-632R20 | 2-16- 3 |
| AN507-632R20 | 2-17- 3 |
| AN507-632R24 | 9-1- 49 |
| AN507-632R24 | 9-1- 97 |
| AN507-632R6 | 2-1- |
| AN507-632R6 | 2-2- |
| AN507-632R6 | 2-2- |
| AN507-632R6 | 2-3B- 2 |
| AN507-632R6 | 2-3E- 2 |
| AN507-632R6 | 2-8- 10 |

| PART NUMBER | FIGURE AND INDEX NO. |
|---|---|
| AN507-632R6 | 2-8- 43 |
| AN507-632R6 | 2-11- 10 |
| AN507-632R6 | 2-12- 8 |
| AN507-632R6 | 2-13- 2 |
| AN507-632R6 | 2-18- 4 |
| AN507-632R6 | 3-3- |
| AN507-632R6 | 3-3- |
| AN507-632R6 | 3-5- |
| AN507-632R6 | 3-5- |
| AN507-632R6 | 4-1- |
| AN507-632R6 | 6-1- 43 |
| AN507-632R6 | 6-3- 45 |
| AN507-632R6 | 6-5- 38 |
| AN507-632R6 | 6-7- 53 |
| AN507-632R6 | 6-8- 66 |
| AN507-632R6 | 6-9- 44 |
| AN507-632R6 | 6-10- 36 |
| AN507-632R6 | 6-11- 36 |
| AN507-632R6 | 7-3- 55 |
| AN507-632R6 | 7-4- 54 |
| AN507-632R6 | 7-2- 53 |
| AN507-632R8 | 2-9- |
| AN507-632R8 | 2-14- 2 |
| AN507-632R8 | 3-7- 5 |
| AN507-632R8 | 5-9- |
| AN507-632R8 | 7-5- |
| AN507-632R8 | 7-5- 16 |
| AN507-632R8 | 7-6- 8 |
| AN507-832R10 | 6-1- 11 |
| AN507-832R10 | 6-3- 18 |
| AN507-832R10 | 6-5- |
| AN507-832R10 | 6-9- 29 |
| AN507-832R10 | 6-10- 22 |
| AN507-832R10 | 6-11- 20 |
| AN507-832R10 | 7-2- 15 |
| AN507-832R10 | 7-3- |
| AN507-832R10 | 7-4- |
| AN507-832R8 | 6-1- 12 |
| AN507-832R8 | 6-9- 28 |
| AN507-832R8 | 7-2- 14 |
| AN507B6R12 | 5-8- |
| AN507B6R12 | 5-8- |
| AN507B6R12 | 5-8- |
| AN507B6R12 | 5-8- |
| AN507B6R12 | 5-8- |
| AN507B632R12 | 1-2- |
| AN507B632R12 | 1-3- |
| AN507B632R12 | 1-3- |
| AN507B632R12 | 1-4- |
| AN507B632R12 | 2-5- |
| AN507B632R12 | 2-6- |
| AN507B632R12 | 2-6- |
| AN507B632R12 | 2-7- |
| AN507B632R12 | 2-19- 5 |
| AN507B632R12 | 3-5- |
| AN509-10R32C | 8-3- 6 |
| AN515-B6R10 | 5-4- |
| AN515-B6R10 | 5-7- 39 |
| AN515-B6R6 | 9-4- 51 |
| AN515-10R6 | 1-2- 25 |
| AN515-10R6 | 2-5- 23 |
| AN515-10R6 | 5-1- 26 |
| AN515-10R6 | 5-1- |
| AN515-10R9 | 2-15- 53 |
| AN515-3R4 | 8-2- 39 |
| AN515-4R4 | 2-2- 70 |
| AN515-4R4 | 2-4- 56 |
| AN515-4R4 | 2-5- 79 |
| AN515-6R10 | 2-1- 11 |
| AN515-6R10 | 2-3A- 58 |
| AN515-6R10 | 2-3B- 62 |
| AN515-6R10 | 2-3C- 59 |
| AN515-6R10 | 2-3D- 41 |
| AN515-6R12 | 2-3- 7 |
| AN515-6R12 | 2-3E- 8 |

| PART NUMBER | FIGURE AND INDEX NO. |
|---|---|
| AN515-6R12 | 2-10- 9 |
| AN515-6R12 | 2-14- 72 |
| AN515-6R12 | 2-15- 62 |
| AN515-6R12 | 2-16- 33 |
| AN515-6R12 | 2-17- 33 |
| AN515-6R12 | 2-18- 81 |
| AN515-6R12 | 2-19- 49 |
| AN515-6R14 | 2-13- 73 |
| AN515-6R16 | 2-12- 19 |
| AN515-6R18 | 6-8- 51 |
| AN515-6R18 | 7-1- 22 |
| AN515-6R4 | 9-4- 66 |
| AN515-6R6 | 2-1- 20 |
| AN515-6R6 | 2-1- 26 |
| AN515-6R6 | 2-1- 28 |
| AN515-6R6 | 2-3- 20 |
| AN515-6R6 | 2-3A- 20 |
| AN515-6R6 | 2-3B- 24 |
| AN515-6R6 | 2-3C- 21 |
| AN515-6R6 | 2-3D- 21 |
| AN515-6R6 | 2-3E- 16 |
| AN515-6R6 | 2-4- |
| AN515-6R6 | 2-5- |
| AN515-6R6 | 2-6- |
| AN515-6R6 | 2-6- |
| AN515-6R6 | 2-7- |
| AN515-6R6 | 2-9- |
| AN515-6R6 | 2-9- 29 |
| AN515-6R6 | 2-11- 9 |
| AN515-6R6 | 2-12- 7 |
| AN515-6R6 | 2-19- |
| AN515-6R6 | 3-1- |
| AN515-6R6 | 7-4- 18 |
| AN515-6R6 | 7-4- 36 |
| AN515-6R6 | 7-5- 11 |
| AN515-6R6 | 7-5- 19 |
| AN515-6R6 | 9-1- |
| AN515-6R6 | 9-1- 54 |
| AN515-6R6 | 9-1- |
| AN515-6R6 | 9-4- 27 |
| AN515-6R6 | 4-1- 35 |
| AN515-6R6 | 5-8- 5 |
| AN515-6R6 | 5-8- |
| AN515-6R6 | 5-9- |
| AN515-6R6 | 6-1- 16 |
| AN515-6R6 | 6-1- 29 |
| AN515-6R6 | 6-2- |
| AN515-6R6 | 6-3- |
| AN515-6R6 | 6-3- 24 |
| AN515-6R6 | 6-4- |
| AN515-6R6 | 6-5- 16 |
| AN515-6R6 | 6-7- 16 |
| AN515-6R6 | 6-7- 41 |
| AN515-6R6 | 6-7- 50 |
| AN515-6R6 | 6-8- 29 |
| AN515-6R6 | 6-9- 14 |
| AN515-6R6 | 6-9- 33 |
| AN515-6R6 | 6-9- 41 |
| AN515-6R6 | 6-10- |
| AN515-6R6 | 6-10- 24 |
| AN515-6R6 | 6-10- |
| AN515-6R6 | 6-11- |
| AN515-6R6 | 6-11- 22 |
| AN515-6R6 | 6-11- |
| AN515-6R6 | 7-2- 19 |
| AN515-6R6 | 7-2- 41 |
| AN515-6R6 | 7-3- 19 |
| AN515-6R6 | 7-3- 37 |
| AN515-6R8 | 1-1- |
| AN515-6R8 | 1-2- |
| AN515-6R8 | 1-3- |
| AN515-6R8 | 1-4- |
| AN515-6R8 | 2-1- 8 |
| AN515-6R8 | 2-1- 16 |
| AN515-6R8 | 2-1- 22 |

| PART NUMBER | FIGURE AND INDEX NO. |
|---|---|
| AN515-6R8 | 2-3A- 54 |
| AN515-6R8 | 2-3B- 58 |
| AN515-6R8 | 2-3C- 55 |
| AN515-6R8 | 2-3D- 37 |
| AN515-6R8 | 2-4- |
| AN515-6R8 | 2-5- |
| AN515-6R8 | 2-6- |
| AN515-6R8 | 2-7- |
| AN515-6R8 | 2-9- |
| AN515-6R8 | 2-12- 21 |
| AN515-6R8 | 9-1- |
| AN515-6R8 | 9-1- 10 |
| AN515-6R8 | 9-1- |
| AN515-6R8 | 9-1- |
| AN515-6R8 | 10-5- 14 |
| AN515-6R8 | 10-5- 17 |
| AN515-6R8 | 6-5- |
| AN515-6R8 | 6-6- |
| AN515-6R8 | 6-8- 52 |
| AN515-6R8 | 6-8- 62 |
| AN515-6R8 | 7-1- 23 |
| AN515-6R8 | 7-2- 27 |
| AN515-8R-10 | 5-1- |
| AN515-8R-10 | 9-1- |
| AN515-8R-16 | 3-1- 10 |
| AN515-8R-16 | 3-2- 10 |
| AN515-8R-16 | 3-2- |
| AN515-8R10 | 2-2- 22 |
| AN515-8R10 | 2-2- 26 |
| AN515-8R10 | 2-3E- 45 |
| AN515-8R10 | 2-4- 34 |
| AN515-8R10 | 2-4- 38 |
| AN515-8R10 | 2-5- 43 |
| AN515-8R10 | 2-6- 30 |
| AN515-8R10 | 2-6- 34 |
| AN515-8R10 | 2-7- 45 |
| AN515-8R10 | 2-12- 37 |
| AN515-8R10 | 2-12- 41 |
| AN515-8R10 | 2-19- 19 |
| AN515-8R10 | 2-19- 23 |
| AN515-8R10 | 3-1- 19 |
| AN515-8R10 | 3-2- 19 |
| AN515-8R10 | 3-2- |
| AN515-8R10 | 3-6- 19 |
| AN515-8R10 | 3-6- 24 |
| AN515-8R10 | 5-1- 4 |
| AN515-8R10 | 5-1- 18 |
| AN515-8R10 | 5-1- 21 |
| AN515-8R10 | 5-1- |
| AN515-8R10 | 5-3- 19 |
| AN515-8R10 | 5-3- 24 |
| AN515-8R10 | 5-4- 18 |
| AN515-8R10 | 6-1- 37 |
| AN515-8R10 | 6-2- 11 |
| AN515-8R10 | 6-3- |
| AN515-8R10 | 6-4- |
| AN515-8R10 | 6-5- 32 |
| AN515-8R10 | 6-6- 8 |
| AN515-8R10 | 6-7- 9 |
| AN515-8R10 | 6-7- 33 |
| AN515-8R10 | 6-8- 3 |
| AN515-8R10 | 6-8- 10 |
| AN515-8R10 | 6-8- 22 |
| AN515-8R10 | 6-9- 11 |
| AN515-8R10 | 6-10- |
| AN515-8R10 | 6-11- |
| AN515-8R10 | 9-1- |
| AN515-8R10 | 9-1- 69 |
| AN515-8R12 | 1-3- 30 |
| AN515-8R12 | 2-3A- 6 |
| AN515-8R12 | 2-3B- 10 |
| AN515-8R12 | 2-3C- 7 |
| AN515-8R12 | 2-3D- 7 |
| AN515-8R12 | 2-6- |
| AN515-8R12 | 6-1- |

| PART NUMBER | FIGURE AND INDEX NO. |
|---|---|
| AN515-8R12 | 6-3- 21 |
| AN515-8R12 | 6-5- 13 |
| AN515-8R12 | 6-7- 39 |
| AN515-8R12 | 6-9- |
| AN515-8R12 | 6-10- 3 |
| AN515-8R12 | 6-10- 27 |
| AN515-8R12 | 6-11- 25 |
| AN515-8R12 | 7-2- |
| AN515-8R12 | 7-3- 16 |
| AN515-8R12 | 7-4- 15 |
| AN515-8R16 | 1-1- 5 |
| AN515-8R16 | 1-2- 7 |
| AN515-8R16 | 1-2- 17 |
| AN515-8R16 | 1-3- 6 |
| AN515-8R16 | 1-4- 12 |
| AN515-8R16 | 2-2- 9 |
| AN515-8R16 | 2-2- |
| AN515-8R16 | 2-4- 9 |
| AN515-8R16 | 2-5- 9 |
| AN515-8R16 | 2-5- 15 |
| AN515-8R16 | 2-6- 10 |
| AN515-8R16 | 2-7- 9 |
| AN515-8R16 | 2-7- 15 |
| AN515-8R16 | 2-19- 9 |
| AN515-8R16 | 3-6- 5 |
| AN515-8R16 | 4-1- 4 |
| AN515-8R16 | 5-1- 9 |
| AN515-8R16 | 5-1- 52 |
| AN515-8R16 | 5-3- 34 |
| AN515-8R16 | 5-3- |
| AN515-8R16 | 5-4- 7 |
| AN515-8R16 | 5-4- 63 |
| AN515-8R16 | 5-6- 4 |
| AN515-8R16 | 5-7- 3 |
| AN515-8R16 | 5-8- 12 |
| AN515-8R16 | 5-8- |
| AN515-8R16 | 6-1- |
| AN515-8R16 | 6-2- |
| AN515-8R16 | 6-5- |
| AN515-8R16 | 6-6- |
| AN515-8R16 | 6-7- 3 |
| AN515-8R16 | 6-7- 12 |
| AN515-8R16 | 6-8- 15 |
| AN515-8R16 | 6-8- 25 |
| AN515-8R18 | 2-3E- |
| AN515-8R18 | 6-1- 35 |
| AN515-8R18 | 6-2- 8 |
| AN515-8R18 | 6-3- 37 |
| AN515-8R18 | 6-4- 12 |
| AN515-8R18 | 6-5- 29 |
| AN515-8R18 | 6-6- 5 |
| AN515-8R18 | 6-7- 6 |
| AN515-8R18 | 6-7- 18 |
| AN515-8R18 | 6-8- 19 |
| AN515-8R18 | 6-8- 31 |
| AN515-8R18 | 6-9- 16 |
| AN515-8R18 | 6-10- |
| AN515-8R18 | 6-10- |
| AN515-8R18 | 6-11- |
| AN515-8R18 | 6-11- |
| AN515-8R18 | 7-2- 46 |
| AN515-8R18 | 7-4- 32 |
| AN515-8R20 | 2-3- 22 |
| AN515-8R20 | 2-3A- 22 |
| AN515-8R20 | 2-3B- 26 |
| AN515-8R20 | 2-3C- 23 |
| AN515-8R20 | 2-3D- 23 |
| AN515-8R20 | 2-3E- 18 |
| AN515-8R20 | 6-9- 7 |
| AN515-8R22 | 7-1- 30 |
| AN515-8R4 | 9-3- 2 |
| AN515-8R5 | 9-3- 25 |
| AN515-8R6 | 2-2- 18 |
| AN515-8R6 | 2-2- 20 |
| AN515-8R6 | 2-2- |

| PART NUMBER | FIGURE AND INDEX NO. |
|---|---|
| AN515-8R6 | 2-2- 57 |
| AN515-8R6 | 2-2- 59 |
| AN515-8R6 | 2-3- 10 |
| AN515-8R6 | 2-3A- 9 |
| AN515-8R6 | 2-3B- 13 |
| AN515-8R6 | 2-3C- 10 |
| AN515-8R6 | 2-3D- 10 |
| AN515-8R6 | 2-3E- 12 |
| AN515-8R6 | 2-18- 6 |
| AN515-8R6 | 2-18- |
| AN515-8R6 | 3-1- |
| AN515-8R6 | 3-1- |
| AN515-8R6 | 3-1- |
| AN515-8R6 | 3-1- |
| AN515-8R6 | 3-2- 22 |
| AN515-8R6 | 3-2- |
| AN515-8R6 | 7-4- |
| AN515-8R6 | 8-4- 19 |
| AN515-8R6 | 8-4- 22 |
| AN515-8R6 | 9-1- 71 |
| AN515-8R6 | 9-3- 14 |
| AN515-8R6 | 9-4- 71 |
| AN515-8R6 | 10-5- 8 |
| AN515-8R6 | 4-1- 20 |
| AN515-8R6 | 5-1- 7 |
| AN515-8R6 | 5-1- |
| AN515-8R6 | 5-3- |
| AN515-8R6 | 5-3- 27 |
| AN515-8R6 | 5-4- |
| AN515-8R6 | 5-6- |
| AN515-8R6 | 5-6- |
| AN515-8R6 | 5-6-20B |
| AN515-8R6 | 5-7- 10 |
| AN515-8R6 | 5-7- 14 |
| AN515-8R6 | 5-8- |
| AN515-8R6 | 5-8- |
| AN515-8R6 | 5-8- |
| AN515-8R6 | 5-9- 7 |
| AN515-8R6 | 6-1- |
| AN515-8R6 | 6-3- |
| AN515-8R6 | 6-3- 27 |
| AN515-8R6 | 6-5- 19 |
| AN515-8R6 | 7-2- |
| AN515-8R6 | 7-3- 5 |
| AN515-8R6 | 7-3- |
| AN515-8R6 | 7-3- |
| AN515-8R6 | 7-3- 33 |
| AN515-8R7 | 2-4- 30 |
| AN515-8R7 | 2-5- 47 |
| AN515-8R7 | 3-6- 6 |
| AN515-8R7 | 5-7- 4 |
| AN515-8R7 | 6-8- 6 |
| AN515-8R8 | 1-2- |
| AN515-8R8 | 1-2- |
| AN515-8R8 | 1-2- |
| AN515-8R8 | 1-2- |
| AN515-8R8 | 1-2- 28 |
| AN515-8R8 | 1-2- 30 |
| AN515-8R8 | 1-3- |
| AN515-8R8 | 1-3- |
| AN515-8R8 | 1-3- |
| AN515-8R8 | 1-3- |
| AN515-8R8 | 1-3- |
| AN515-8R8 | 1-3- 24 |
| AN515-8R8 | 1-4- 5 |
| AN515-8R8 | 1-4- 25 |
| AN515-8R8 | 1-4- 27 |
| AN515-8R8 | 2-1- 5 |
| AN515-8R8 | 2-3E- 6 |
| AN515-8R8 | 2-3E- 22 |
| AN515-8R8 | 2-4- 10 |
| AN515-8R8 | 2-4- 25 |
| AN515-8R8 | 2-4- 27 |
| AN515-8R8 | 2-5- |
| AN515-8R8 | 2-5- |

| PART NUMBER | FIGURE AND INDEX NO. |
|---|---|
| AN515-8R8 | 2-5- |
| AN515-8R8 | 2-5- |
| AN515-8R8 | 2-5- 26 |
| AN515-8R8 | 2-5- 28 |
| AN515-8R8 | 2-5- 53 |
| AN515-8R8 | 2-5- 56 |
| AN515-8R8 | 2-6- |
| AN515-8R8 | 2-6- |
| AN515-8R8 | 2-6- |
| AN515-8R8 | 2-6- |
| AN515-8R8 | 2-6- |
| AN515-8R8 | 2-6- 38 |
| AN515-8R8 | 2-6- |
| AN515-8R8 | 2-6- |
| AN515-8R8 | 2-7- 30 |
| AN515-8R8 | 2-7- 34 |
| AN515-8R8 | 2-7- 36 |
| AN515-8R8 | 2-7- |
| AN515-8R8 | 2-7- 39 |
| AN515-8R8 | 2-7- 42 |
| AN515-8R8 | 2-7- 51 |
| AN515-8R8 | 2-12- 17 |
| AN515-8R8 | 2-12- 24 |
| AN515-8R8 | 2-12- 27 |
| AN515-8R8 | 2-12- 31 |
| AN515-8R8 | 2-12- 34 |
| AN515-8R8 | 2-13- 36 |
| AN515-8R8 | 2-14- 27 |
| AN515-8R8 | 2-14- 30 |
| AN515-8R8 | 2-14- 33 |
| AN515-8R8 | 2-19- 27 |
| AN515-8R8 | 3-5- 5 |
| AN515-8R8 | 3-5- |
| AN515-8R8 | 7-4- 8 |
| AN515-8R8 | 7-5- 3 |
| AN515-8R8 | 7-6- 2 |
| AN515-8R8 | 7-6- 4 |
| AN515-8R8 | 9-1- |
| AN515-8R8 | 9-1- |
| AN515-8R8 | 9-3- 16 |
| AN515-8R8 | 9-3- 19 |
| AN515-8R8 | 9-3- 22 |
| AN515-8R8 | 9-3- 31 |
| AN515-8R8 | 10-5- 3 |
| AN515-8R8 | 3-5- |
| AN515-8R8 | 3-5- 34 |
| AN515-8R8 | 3-6- 4 |
| AN515-8R8 | 3-6- 13 |
| AN515-8R8 | 3-6- 16 |
| AN515-8R8 | 3-6- 29 |
| AN515-8R8 | 3-6- 32 |
| AN515-8R8 | 5-3- |
| AN515-8R8 | 5-3- |
| AN515-8R8 | 5-3- 29 |
| AN515-8R8 | 5-3- |
| AN515-8R8 | 5-3- |
| AN515-8R8 | 5-4- 4 |
| AN515-8R8 | 5-4- 9 |
| AN515-8R8 | 5-4- 14 |
| AN515-8R8 | 5-4- 60 |
| AN515-8R8 | 5-4- 65 |
| AN515-8R8 | 5-4- |
| AN515-8R8 | 5-7- 5 |
| AN515-8R8 | 5-7- 35 |
| AN515-8R8 | 5-7- 51 |
| AN515-8R8 | 5-7- 54 |
| AN515-8R8 | 5-8-23B |
| AN515-8R8 | 5-8-24B |
| AN515-8R8 | 5-8- |
| AN515-8R8 | 5-8- |
| AN515-8R8 | 5-8- |
| AN515-8R8 | 6-1- 18 |
| AN515-8R8 | 6-3- 3 |
| AN515-8R8 | 6-4- 3 |
| AN515-8R8 | 6-7- 25 |

| PART NUMBER | FIGURE AND INDEX NO. |
|---|---|
| AN515-8R8 | 6-9- 3 |
| AN515-8R8 | 6-9- 24 |
| AN515-8R8 | 6-10- 18 |
| AN515-8R8 | 6-11- 4 |
| AN515-8R8 | 6-11- 16 |
| AN515-8R8 | 6-12- 3 |
| AN515-8R8 | 6-12- 5 |
| AN515-8R8 | 6-12- 8 |
| AN515-8R8 | 7-1- 34 |
| AN515-8R8 | 7-1- |
| AN515-8R8 | 7-2- 9 |
| AN515-8R8 | 7-2- 38 |
| AN515-8R8 | 7-3- 9 |
| AN515B6R10 | 2-1- |
| AN515B6R10 | 2-12- 49 |
| AN515B6R10 | 3-2- |
| AN515B6R10 | 3-2- |
| AN515B6R10 | 3-6- |
| AN515B6R10 | 4-1- |
| AN515B6R10 | 5-4- |
| AN515B6R10 | 5-8- |
| AN515B6R10 | 5-8- |
| AN515B6R10 | 5-8- |
| AN515B6R10 | 5-8- |
| AN515B6R10 | 5-8- |
| AN515B6R12 | 2-10- |
| AN5156R8 | 4-1- 9 |
| AN520-10R10 | 1-3- |
| AN520-10R10 | 1-4- 23 |
| AN520-10R10 | 2-3E- 25 |
| AN520-10R10 | 2-6- |
| AN520-10R10 | 2-7- 32 |
| AN520-10R10 | 2-13- 10 |
| AN520-10R10 | 2-13- 33 |
| AN520-10R10 | 2-18- 13 |
| AN520-10R10 | 2-18- 66 |
| AN520-10R10 | 2-18- 68 |
| AN520-10R10 | 5-1- 2 |
| AN520-10R10 | 5-1- |
| AN520-10R12 | 8-4- 16 |
| AN520-10R12 | 9-3- 52 |
| AN520-10R22 | 6-7- 21 |
| AN520-10R24 | 6-8- 42 |
| AN520-10R24 | 7-1- 10 |
| AN520-10R5 | 5-6- 23 |
| AN520-10R6 | 1-2- 14 |
| AN520-10R6 | 1-2- 38 |
| AN520-10R6 | 1-3- 15 |
| AN520-10R6 | 1-4- 21 |
| AN520-10R6 | 2-2- 16 |
| AN520-10R6 | 2-2- |
| AN520-10R6 | 2-5- 36 |
| AN520-10R6 | 2-5- 40 |
| AN520-10R6 | 2-6- 17 |
| AN520-10R6 | 2-6- 21 |
| AN520-10R6 | 2-7- 22 |
| AN520-10R6 | 2-7- 26 |
| AN520-10R6 | 2-12- 47 |
| AN520-10R6 | 2-15- 8 |
| AN520-10R6 | 2-15- 10 |
| AN520-10R6 | 2-19- 16 |
| AN520-10R6 | 3-1- 16 |
| AN520-10R6 | 3-1- 53 |
| AN520-10R6 | 3-2- 16 |
| AN520-10R6 | 3-5- |
| AN520-10R6 | 3-6- 27 |
| AN520-10R6 | 5-3- 17 |
| AN520-10R6 | 5-4- 26 |
| AN520-10R6 | 5-4- |
| AN520-10R6 | 5-6- 12 |
| AN520-10R6 | 5-7- 20 |
| AN520-10R6 | 5-8- 18 |
| AN520-10R6 | 5-8- 22 |
| AN520-10R6 | 5-8- 26 |
| AN520-10R6 | 5-8- |

| PART NUMBER | FIGURE AND INDEX NO. |
|---|---|
| AN520-10R6 | 5-8- |
| AN520-10R6 | 5-9- 5 |
| AN520-10R6 | 6-3- 9 |
| AN520-10R6 | 6-4- 9 |
| AN520-10R6 | 6-10- 7 |
| AN520-10R7 | 2-2- 13 |
| AN520-10R7 | 2-2- 54 |
| AN520-10R8 | 2-14- 7 |
| AN520-10R8 | 3-5- |
| AN520-10R8 | 3-5- 8 |
| AN520-10R8 | 3-5- |
| AN520-10R8 | 3-5- 33 |
| AN520-10R8 | 3-5- |
| AN520-10R8 | 5-1- 14 |
| AN520-10R8 | 6-8- 35 |
| AN520-10R8 | 7-1- 3 |
| AN520-10R8 | 8-1- 11 |
| AN520-10R8 | 8-1- 17 |
| AN520-10R8 | 8-1- 20 |
| AN520-10R8 | 10-1- 28 |
| AN520-10R8 | 10-1- 42 |
| AN520-10R8 | 10-5- 11 |
| AN520-3R4 | 8-2- 22 |
| AN520-3R4 | 5-3- |
| AN520-416R8 | 6-3- 11 |
| AN520-416R8 | 6-5- 4 |
| AN520-416R8 | 6-10- |
| AN520-416R8 | 6-11- 13 |
| AN520-416R8 | 7-3- 3 |
| AN520-416R8 | 7-4- 3 |
| AN520-8R8 | 2-14- 9 |
| AN520-8R8 | 7-4- |
| AN525-10R9 | 2-3- 25 |
| AN525-10R9 | 2-3A- 46 |
| AN525-10R9 | 2-3B- 50 |
| AN525-10R9 | 2-3C- 47 |
| AN525-10R9 | 2-13- 63 |
| AN525-10R9 | 2-14- 63 |
| AN525-10R9 | 2-15- 26 |
| AN525-832R7 | 2-3- 30 |
| AN525-832R7 | 2-3A- 48 |
| AN525-832R7 | 2-3B- 52 |
| AN525-832R7 | 2-3C- 49 |
| AN525-832R7 | 2-13- 65 |
| AN525-832R7 | 2-14- 65 |
| AN525-832R7 | 2-15- 55 |
| AN525-832R8 | 2-18- 35 |
| AN664C3 | 2-18- 21 |
| AN664C3 | 2-18- 38 |
| AN6693RH | 2-18- |
| AN742-D4 | 6-7- 38 |
| AN742-D4 | 6-9- 34 |
| AN742-D4 | 6-10- 28 |
| AN742-D4 | 6-11- 26 |
| AN742D16 | 10-1- 25 |
| AN742D16 | 10-1- 39 |
| AN742D16 | 10-1- 55 |
| AN742D3 | 8-4- 18 |
| AN742D4 | 7-4- 7 |
| AN742D4 | 7-4- 14 |
| AN742D4 | 7-4- 28 |
| AN742D4 | 6-1- 14 |
| AN742D4 | 6-1- 17 |
| AN742D4 | 6-1- 21 |
| AN742D4 | 6-3- 20 |
| AN742D4 | 6-3- 26 |
| AN742D4 | 6-5- 12 |
| AN742D4 | 6-5- 18 |
| AN742D4 | 6-9- 25 |
| AN742D4 | 6-10- 19 |
| AN742D4 | 6-11- 17 |
| AN742D4 | 7-1- 31 |
| AN742D4 | 7-2- 8 |
| AN742D4 | 7-2- 17 |
| AN742D4 | 7-3- 8 |

| PART NUMBER | FIGURE AND INDEX NO. |
|---|---|
| AN742D4 | 7-3- 15 |
| AN742D4 | 7-3- 29 |
| AN816-2D | 2-3E- 53 |
| AN816-6D | 2-14- 84 |
| AN816-6D | 2-15- 68 |
| AN823-6D | 2-13- 79 |
| AN823-6D | 2-15- 69 |
| AN826-6D | 2-13- 84 |
| AN826-6D | 2-14- 81 |
| AN911-2D | 2-3E- 54 |
| AN911-2D | 2-18- 78 |
| AN912-1D | 2-3E- 52 |
| AN914-2D | 2-13- 85 |
| AN915-2D | 2-15- 64 |
| AN915-2D | 2-16- 37 |
| AN915-2D | 2-17- 37 |
| AN917-2D | 2-3E- 51 |
| AN917-2D | 2-18- 77 |
| AN936-A8 | 6-9- 4 |
| AN936-B8 | 9-3- 3 |
| AN936A10 | 8-1- 9 |
| AN936A10 | 8-1- 12 |
| AN936A10 | 8-4- 15 |
| AN936A10 | 9-3- 29 |
| AN936A4 | 9-1- 52 |
| AN936A4 | 9-1- |
| AN936A4 | 9-1- |
| AN936A4 | 4-1- 33 |
| AN936A6 | 2-10- |
| AN936A6 | 2-19- 48 |
| AN936A6 | 9-4- 53 |
| AN936A6 | 4-1- 8 |
| AN936A8 | 1-1- 6 |
| AN936A8 | 1-2- 8 |
| AN936A8 | 1-2- 18 |
| AN936A8 | 1-3- 7 |
| AN936A8 | 1-4- 6 |
| AN936A8 | 1-4- 13 |
| AN936A8 | 2-2- 11 |
| AN936A8 | 2-2- |
| AN936A8 | 2-2- 72 |
| AN936A8 | 2-4- 11 |
| AN936A8 | 2-4- 59 |
| AN936A8 | 2-5- 10 |
| AN936A8 | 2-5- 16 |
| AN936A8 | 2-5- 82 |
| AN936A8 | 2-6- 11 |
| AN936A8 | 2-7- 10 |
| AN936A8 | 2-7- 16 |
| AN936A8 | 2-19- 10 |
| AN936A8 | 3-1- 11 |
| AN936A8 | 3-2- 11 |
| AN936A8 | 3-2- |
| AN936A8 | 9-1- 70 |
| AN936A8 | 9-3- 27 |
| AN936A8 | 3-6- 7 |
| AN936A8 | 5-1- 10 |
| AN936A8 | 5-1- 53 |
| AN936A8 | 5-3- 32 |
| AN936A8 | 5-3- 35 |
| AN936A8 | 5-3- |
| AN936A8 | 5-4- 8 |
| AN936A8 | 5-4- 64 |
| AN936A8 | 5-6- 5 |
| AN936A8 | 5-7- 6 |
| AN936A8 | 5-7- |
| AN936A8 | 5-8- 13 |
| AN936A8 | 5-8- 16 |
| AN936A8 | 5-8- |
| AN936A8 | 5-8- |
| AN936A8 | 6-1- |
| AN936A8 | 6-2- |
| AN936A8B | 2-3- 14 |
| AN936A8B | 2-3A- 13 |
| AN936A8B | 2-3B- 17 |

| PART NUMBER | FIGURE AND INDEX NO. |
|---|---|
| AN936A8B | 2-3C- 14 |
| AN936A8B | 2-3D- 14 |
| AN936B10 | 5-6- 22 |
| AN960-C10L | 2-3E- 39 |
| AN960-C10L | 2-18- 28 |
| AN960-10 | 2-2- 10 |
| AN960-10 | 2-2- |
| AN960-10 | 2-3E- |
| AN960-10 | 2-9- |
| AN960-10 | 2-13- 11 |
| AN960-10 | 2-18- |
| AN960-10 | 2-18- 46 |
| AN960-10 | 2-18- 50 |
| AN960-10 | 2-18- 56 |
| AN960-10 | 5-4- 19 |
| AN960-10L | 2-3- 39 |
| AN960-10L | 2-3A- |
| AN960-10L | 2-3A- 41 |
| AN960-10L | 2-3A- |
| AN960-10L | 2-3B- |
| AN960-10L | 2-3B- 45 |
| AN960-10L | 2-3B- |
| AN960-10L | 2-3C- 40 |
| AN960-10L | 2-3C- |
| AN960-10L | 2-3C- |
| AN960-10L | 2-3D- |
| AN960-10L | 2-3E- 32 |
| AN960-10L | 2-5- |
| AN960-10L | 2-13- 43 |
| AN960-10L | 2-13- |
| AN960-10L | 2-14- |
| AN960-10L | 2-14- 46 |
| AN960-10L | 2-15- 35 |
| AN960-10L | 2-15- |
| AN960-10L | 2-18- 17 |
| AN960-10L | 8-1- 4 |
| AN960-10L | 8-2- 2 |
| AN960-10L | 8-2- 9 |
| AN960-10L | 8-2- 16 |
| AN960-10L | 8-2- 24 |
| AN960-10L | 8-2- 32 |
| AN960-10L | 8-3- 4 |
| AN960-10L | 9-3- 4 |
| AN960-10L | 9-3- 13 |
| AN960-102 | 2-5- |
| AN960-416L | 2-3- 44 |
| AN960-416L | 2-3A- 29 |
| AN960-416L | 2-3B- 33 |
| AN960-416L | 2-3C- 30 |
| AN960-416L | 2-13- 51 |
| AN960-416L | 2-14- 51 |
| AN960-416L | 2-15- 42 |
| AN960-516 | 7-1- |
| AN960-516 | 7-2- |
| AN960-516 | 7-3- |
| AN960-516 | 7-4- |
| AN960-6 | 2-3A- 3 |
| AN960-6 | 2-3A- 55 |
| AN960-6 | 2-3B- 3 |
| AN960-6 | 2-3B- 59 |
| AN960-6 | 2-3C- 3 |
| AN960-6 | 2-3C- 56 |
| AN960-6 | 2-3D- 3 |
| AN960-6 | 2-13- 3 |
| AN960-6 | 2-15- 4 |
| AN960-6 | 2-16- 4 |
| AN960-6 | 2-17- 4 |
| AN960-6 | 5-3- 4 |
| AN960-6 | 5-3- |
| AN960-6 | 5-6- |
| AN960-6 | 6-1- |
| AN960-6 | 6-2- |
| AN960-6 | 6-3- |
| AN960-6 | 6-4- |
| AN960-6 | 6-5- |

| PART NUMBER | FIGURE AND INDEX NO. |
|---|---|
| AN960-6 | 6-6- |
| AN960-6L | 2-9- |
| AN960-6L | 3-1- 4 |
| AN960-6L | 3-2- 4 |
| AN960-6L | 3-2- |
| AN960-6L | 9-4- 5 |
| AN960-6L | 4-1- |
| AN960-6L | 5-1- |
| AN960-6L | 5-1- |
| AN960-6L | 5-4- |
| AN960-6L | 5-4- |
| AN960-6L | 5-8- |
| AN960-6L | 5-8- |
| AN960-8 | 1-2- |
| AN960-8 | 1-2- |
| AN960-8 | 1-2- |
| AN960-8 | 1-2- |
| AN960-8 | 1-2- |
| AN960-8 | 1-3- |
| AN960-8 | 1-3- |
| AN960-8 | 1-3- |
| AN960-8 | 1-3- |
| AN960-8 | 1-4- |
| AN960-8 | 1-4- |
| AN960-8 | 2-2- |
| AN960-8 | 2-2- |
| AN960-8 | 2-2- |
| AN960-8 | 2-3D- 38 |
| AN960-8 | 2-5- |
| AN960-8 | 2-5- |
| AN960-8 | 2-5- |
| AN960-8 | 2-5- |
| AN960-8 | 2-5- |
| AN960-8 | 2-6- |
| AN960-8 | 2-6- |
| AN960-8 | 2-6- |
| AN960-8 | 2-6- |
| AN960-8 | 2-7- |
| AN960-8 | 2-7- |
| AN960-8 | 2-7- |
| AN960-8 | 5-3- |
| AN960-8 | 5-3- |
| AN960-8 | 5-4- 5 |
| AN960-8 | 5-4- 15 |
| AN960-8 | 5-4- |
| AN960-8 | 5-4- 61 |
| AN960-8 | 5-4- |
| AN960-8 | 5-6- |
| AN960-8 | 5-6- |
| AN960-8 | 5-6- |
| AN960-8 | 5-7- 11 |
| AN960-8 | 5-7- 15 |
| AN960-8L | 4-1- 5 |
| AN960A4 | 2-2- 69 |
| AN960D6 | 2-3- 4 |
| AN970-3 | 8-4- 12 |
| AN970-3 | 8-4- 14 |
| AN970-3 | 9-3- 17 |
| AN970-3 | 9-3- 26 |
| ASA#25 | 2-18- 26 |
| A2981S-4-24A | 7-1- 9 |
| A2981S-4-24A | 7-1- 15 |
| A2981S-4-24A | 7-1- 18 |
| A3106A-20-27S | 5-4- |
| A3106A-20-27S | 5-4- |
| A5299-12 | 2-3A- |
| A5299-12 | 2-3B- |
| A5299-12 | 2-3C- |
| A5299-12 | 2-3D- |
| A6K75 | 2-10- 8 |
| A6K75 | 2-12- 18 |
| A6K75 | 2-19- 50 |
| A6K75 | 3-7- |
| A6195-8Z-3 | 2-1- |
| A6195-8Z-3 | 2-1- |

| PART NUMBER | FIGURE AND INDEX NO. |
|---|---|
| A6195-8Z-3 | 2-1- |
| A6196-8Z-3 | 2-1- |
| A6196-8Z-3 | 2-1- |
| A8K75 | 1-1- 8 |
| A8K75 | 1-2- 10 |
| A8K75 | 1-2- 20 |
| A8K75 | 1-3- 8 |
| A8K75 | 1-4- 8 |
| A8K75 | 1-4- 14 |
| A8K75 | 2-2- 12 |
| A8K75 | 2-4- 13 |
| A8K75 | 2-5- 12 |
| A8K75 | 2-5- 18 |
| A8K75 | 2-6- 12 |
| A8K75 | 2-7- 12 |
| A8K75 | 2-7- 18 |
| A8K75 | 2-19- 11 |
| A8K75 | 3-1- 12 |
| A8K75 | 3-2- 12 |
| A8K75 | 3-2- |
| A8K75 | 5-1- 11 |
| A8K75 | 5-1- 54 |
| A8K75 | 5-3- 37 |
| A8K75 | 5-3- |
| A8K75 | 5-4- |
| A8K75 | 5-4- |
| A8K75 | 5-6- 6 |
| A8K75 | 5-7- 8 |
| A8K75 | 5-7- 37 |
| A8K75 | 5-8- 14 |
| A8K75 | 5-8- |
| A8K75 | 6-1- |
| A8K75 | 6-2- |
| A8K75 | 6-5- |
| A8K75 | 6-6- |
| A8K75 | 6-7- 4 |
| A8K75 | 6-9- 5 |
| A8K75 | 6-11- 3 |
| A8584-8Z-3 | 2-1- |
| C-33 | 8-4- 5 |
| DX10-D | 6-1- 1 |
| DX10-D | 6-2- 1 |
| DX10-D | 6-3- 1 |
| DX10-D | 6-4- 1 |
| DX10-D | 6-5- 1 |
| DX10-D | 6-6- 1 |
| DX10-PS | 6-1- 2 |
| DX10-PS | 6-2- 2 |
| DX10-PS | 6-3- 2 |
| DX10-PS | 6-4- 2 |
| DX10-PS | 6-5- 2 |
| DX10-PS | 6-6- 2 |
| EL-2052 | 5-8- |
| EL-2052 | 5-8- |
| EL-2053 | 5-7- |
| FIT-105 3/32X.80 | 4-1- |
| FIT-105-3/32X1/2 | 9-1- 62 |
| FRL10-5 OHM | 9-1- 66 |
| GK-9-21C-1/2 | 4-1- 11 |
| HIF | 6-7- |
| HIF | 6-8- |
| HIF | 6-9- |
| HIF | 6-10- |
| HIF | 6-11- |
| K 109A | 2-6- |
| K-109A | 1-3- |
| K-41116-1 | 5-8- |
| K-41116-1 | 5-8- |
| K-41182-2 | 5-8- |
| K-41182-2 | 5-8- |
| K-41271-1 | 5-8- |
| K-41271-1 | 5-8- |
| KA-10 | 9-1- 1 |
| KA-10 | 9-1- 11 |
| KA-10 | 9-1- 38 |

| PART NUMBER | FIGURE AND INDEX NO. |
|---|---|
| KA-10 | 9-1- 74 |
| KA-11 | 9-1- 43 |
| KA-15 | 3-7- 4 |
| KA-25 | 9-1- 76 |
| KA-25C | 9-1- 80 |
| KHP17D11 | 9-1- 50 |
| KHP17D11 | 9-1- 81 |
| KHP17D11 | 4-1- 31 |
| KHP17D11-12V | 9-1- 67 |
| KI-200 | 3-2- 14 |
| KI-200 | 3-5- 10 |
| KI-200 | 3-5- 36 |
| KI-201 | 3-6- 2 |
| KI-210 | 3-5- 11 |
| KI-210 | 3-5- 37 |
| KJ-200 | 3-2- 49 |
| KN-60 | 3-7- 1 |
| KR-20 | 3-4- 1 |
| KS-501A | 3-1- 8 |
| KS-501A | 3-1- |
| KS-501A | 3-2- 8 |
| KS-501A | 3-2- 48 |
| KS-502 | 3-5- 3 |
| KS-502 | 3-5- 30 |
| KS-505 | 3-6- 3 |
| KX-100 | 3-2- 1 |
| KX-100 | 3-2- 46 |
| KX-120 | 3-2- 2 |
| KX-120 | 3-2- 47 |
| KX-120 | 3-5- 1 |
| KX-120 | 3-5- 28 |
| KX-130 | 3-5- 2 |
| KX-130 | 3-5- 29 |
| KX-150A | 3-3- |
| KX-150A | 3-3- |
| KX-150AE | 3-3- |
| KX-150AE | 3-3- |
| KX-150B | 3-3- 1 |
| KX-150B | 3-3- 30 |
| KX-150BE | 3-3- |
| KX-150BE | 3-3- |
| KX-160E | 3-6- 1 |
| KY-90 | 3-1- 1 |
| KY-95 | 3-1- 2 |
| LU10-28C | 7-5- 25 |
| M-REC3301- | 5-4- |
| M-REC3301- | 5-4- |
| MARK IV | 5-2- 1 |
| MARK V | 5-3- 1 |
| MARK V | 5-3- 63 |
| MARK VII | 5-9- 1 |
| MARK X | 5-4- 1 |
| MARK X | 5-4- 58 |
| MARK X-MODEL E | 5-4- 1 |
| MARK XII | 5-8- 1 |
| MARK XII | 5-8- 1 |
| MARK XII | 5-8- 50 |
| MARK XII | 5-8- 50 |
| MBT-12 | 5-5- 1 |
| MI-18MHR-E | 5-4- |
| MI-18MHR-E | 5-4- |
| MK1000-832 | 7-1- 32 |
| MN20364-832C | 6-4- |
| MRA 20S-GH/VL | 5-6- |
| MRA-VL | 5-4- |
| MRA-VL | 5-4- |
| MRA20S-GH/VL | 5-4- |
| MRA20S-GH/VL | 5-4- |
| MRE18SG7H | 2-8- |
| MRE18SG7H | 2-8- 57 |
| MRE18SG7H | 2-8- |
| MRE26SG7H | 2-8- |
| MRE26SG7H | 2-8- |
| MRE345-G-H/VL | 2-2- |
| MRE345-G-H/VL | 2-2- |

| PART NUMBER | FIGURE AND INDEX NO. |
|---|---|
| MST-105D | 9-1- 56 |
| MST-105E | 2-9- 64 |
| MST-205N | 9-1- 60 |
| MST-205P | 2-9- 22 |
| MST-205P | 2-9- 44 |
| MST-205P | 2-9- 63 |
| MST-405N | 9-1- 58 |
| MST105E | 9-1- 91 |
| MST205E | 9-1- 90 |
| MS2000-1032BC | 7-1- 4 |
| MS20220-2 | 2-3D- 33 |
| MS20220-2 | 2-16- 29 |
| MS20220-2 | 2-17- 29 |
| MS20364-1032C | 3-5- |
| MS20364-1032C | 3-5- |
| MS20364-1032C | 3-5- |
| MS20364-1032C | 8-3- 6 |
| MS20364-632C | 2-9- |
| MS20364-632C | 6-1- |
| MS20364-632C | 6-2- |
| MS20364-632C | 6-4- |
| MS20364-632C | 6-6- |
| MS20364-832C | 1-3- |
| MS20364-832C | 1-3- |
| MS20364-832C | 1-3- |
| MS20364-832C | 1-3- |
| MS20364-832C | 2-3A- 7 |
| MS20364-832C | 2-3A- 23 |
| MS20364-832C | 2-3B- 11 |
| MS20364-832C | 2-3B- 27 |
| MS20364-832C | 2-3C- 8 |
| MS20364-832C | 2-3C- 24 |
| MS20364-832C | 2-3D- 8 |
| MS20364-832C | 2-3D- 24 |
| MS20364-832C | 2-3E- 19 |
| MS20364-832C | 2-6- |
| MS20364-832C | 2-6- |
| MS20364-832C | 2-6- |
| MS20364-832C | 2-6- |
| MS20364-832C | 3-5- |
| MS20364-832C | 6-1- |
| MS20364-832C | 6-1- |
| MS20364-832C | 6-1- 38 |
| MS20364-832C | 6-2- 9 |
| MS20364-832C | 6-2- 12 |
| MS20364-832C | 6-3- 4 |
| MS20364-832C | 6-3- 28 |
| MS20364-832C | 6-3- 38 |
| MS20364-832C | 6-3- |
| MS20364-832C | 6-4- 4 |
| MS20364-832C | 6-4- 13 |
| MS20364-832C | 6-5- 20 |
| MS20364-832C | 6-5- 30 |
| MS20364-832C | 6-5- 33 |
| MS20364-832C | 6-6- 6 |
| MS20364-832C | 7-2- |
| MS20364-832C | 7-3- |
| MS20364-832C | 7-3- |
| MS20364-832C | 7-4- |
| MS20364-832C | 7-4- |
| MS20364-832C | 8-4- 20 |
| MS20364-832C | 10-5- 9 |
| MS20365-1032 | 8-3- 7 |
| MS20365-1032C | 2-13- 34 |
| MS20365-1032C | 2-15- 16 |
| MS20365-1032C | 2-15- 27 |
| MS20365-1032C | 2-18- 47 |
| MS20365-1032C | 2-18- 51 |
| MS20365-1032C | 2-18- 57 |
| MS20365-1032C | 5-1- 3 |
| MS20365-1032C | 5-1- 15 |
| MS20365-1032C | 5-1- |
| MS20365-1032C | 7-1- 14 |
| MS20365-1032C | 8-1- 13 |
| MS20365-1032C | 8-2- 3 |

| PART NUMBER | FIGURE AND INDEX NO. |
|---|---|
| MS20365-1032C | 8-2- 10 |
| MS20365-1032C | 8-2- 17 |
| MS20365-1032C | 8-2- 26 |
| MS20365-1032C | 8-2- 33 |
| MS20365-1032C | 8-4- 13 |
| MS20365-1032C | 10-1- |
| MS20365-1032C | 10-1- |
| MS20365-1032C | 10-5- |
| MS20365-132 | 2-13- 53 |
| MS20365-132 | 2-14- 53 |
| MS20365-132 | 2-15- 44 |
| MS20365-428C | 2-3- 45 |
| MS20365-428C | 2-3A- 31 |
| MS20365-428C | 2-3B- 35 |
| MS20365-428C | 2-3C- 32 |
| MS20365-428C | 2-13- 30 |
| MS20365-428C | 2-13- 52 |
| MS20365-428C | 2-14- 52 |
| MS20365-428C | 2-15- 43 |
| MS20365-440 | 6-1- |
| MS20365-440 | 6-5- |
| MS20365-440C | 6-3- |
| MS20365-440C | 7-2- |
| MS20365-440C | 7-3- |
| MS20365-440C | 7-4- |
| MS20365-440C | 7-5- 23 |
| MS20365-440C | 7-6- 14 |
| MS20365-632C | 2-1- 17 |
| MS20365-632C | 2-3- 5 |
| MS20365-632C | 2-3- 8 |
| MS20365-632C | 2-3- 21 |
| MS20365-632C | 2-3A- 4 |
| MS20365-632C | 2-3A- 21 |
| MS20365-632C | 2-3A- 56 |
| MS20365-632C | 2-3B- 25 |
| MS20365-632C | 2-3B- 60 |
| MS20365-632C | 2-3C- 4 |
| MS20365-632C | 2-3C- 22 |
| MS20365-632C | 2-3C- 57 |
| MS20365-632C | 2-3D- 4 |
| MS20365-632C | 2-3D- 22 |
| MS20365-632C | 2-3D- 39 |
| MS20365-632C | 2-3E- 3 |
| MS20365-632C | 2-3E- 17 |
| MS20365-632C | 2-8- 11 |
| MS20365-632C | 2-8- 44 |
| MS20365-632C | 2-9- |
| MS20365-632C | 2-11- 8 |
| MS20365-632C | 2-12- 6 |
| MS20365-632C | 2-12- 22 |
| MS20365-632C | 2-13- 4 |
| MS20365-632C | 2-14- 3 |
| MS20365-632C | 2-15- 5 |
| MS20365-632C | 2-18- 5 |
| MS20365-632C | 4-1- 36 |
| MS20365-632C | 4-1- |
| MS20365-632C | 5-4- 10 |
| MS20365-632C | 5-4- 66 |
| MS20365-632C | 5-9- |
| MS20365-632C | 6-1- |
| MS20365-632C | 6-3- 25 |
| MS20365-632C | 6-5- 17 |
| MS20365-632C | 7-1- |
| MS20365-632C | 7-2- |
| MS20365-632C | 7-2- 42 |
| MS20365-632C | 7-3- 20 |
| MS20365-632C | 7-3- 38 |
| MS20365-632C | 7-4- 19 |
| MS20365-632C | 7-4- 37 |
| MS20365-632C | 7-5- 12 |
| MS20365-632C | 7-5- |
| MS20365-632C | 7-5- 17 |
| MS20365-632C | 7-5- 20 |
| MS20365-632C | 7-6- 9 |
| MS20365-632C | 8-4- 9 |

| PART NUMBER | FIGURE AND INDEX NO. |
|---|---|
| MS20365-632C | 9-1- 55 |
| MS20365-632C | 9-1- |
| MS20365-632C | 9-4- 6 |
| MS20365-632C | 9-4- 28 |
| MS20365-632C | 9-4- 67 |
| MS20365-823C | 5-1- 20 |
| MS20365-832C | 1-1- 7 |
| MS20365-832C | 1-2- 9 |
| MS20365-832C | 1-2- 19 |
| MS20365-832C | 1-2- |
| MS20365-832C | 1-2- |
| MS20365-832C | 1-2- |
| MS20365-832C | 1-2- |
| MS20365-832C | 1-3- 9 |
| MS20365-832C | 1-4- 7 |
| MS20365-832C | 1-4- 15 |
| MS20365-832C | 1-4- |
| MS20365-832C | 1-4- |
| MS20365-832C | 2-2- |
| MS20365-832C | 2-2- 24 |
| MS20365-832C | 2-2- 28 |
| MS20365-832C | 2-2- |
| MS20365-832C | 2-2- |
| MS20365-832C | 2-2- |
| MS20365-832C | 2-3- 23 |
| MS20365-832C | 2-3E- |
| MS20365-832C | 2-4- 12 |
| MS20365-832C | 2-4- |
| MS20365-832C | 2-4- 28 |
| MS20365-832C | 2-4- 31 |
| MS20365-832C | 2-4- 36 |
| MS20365-832C | 2-4- 40 |
| MS20365-832C | 2-5- 11 |
| MS20365-832C | 2-5- 17 |
| MS20365-832C | 2-5- |
| MS20365-832C | 2-5- |
| MS20365-832C | 2-5- |
| MS20365-832C | 2-5- |
| MS20365-832C | 2-5- |
| MS20365-832C | 2-5- 45 |
| MS20365-832C | 2-5- 48 |
| MS20365-832C | 2-5- |
| MS20365-832C | 2-5- |
| MS20365-832C | 2-5- 54 |
| MS20365-832C | 2-5- |
| MS20365-832C | 2-6- 13 |
| MS20365-832C | 2-6- 32 |
| MS20365-832C | 2-6- 36 |
| MS20365-832C | 2-6- |
| MS20365-832C | 2-7- 11 |
| MS20365-832C | 2-7- 17 |
| MS20365-832C | 2-7- |
| MS20365-832C | 2-7- |
| MS20365-832C | 2-7- |
| MS20365-832C | 2-7- 40 |
| MS20365-832C | 2-7- 43 |
| MS20365-832C | 2-7- 47 |
| MS20365-832C | 2-7- 52 |
| MS20365-832C | 2-12- 20 |
| MS20365-832C | 2-12- 25 |
| MS20365-832C | 2-12- 28 |
| MS20365-832C | 2-12- 32 |
| MS20365-832C | 2-12- 35 |
| MS20365-832C | 2-12- 39 |
| MS20365-832C | 2-12- 43 |
| MS20365-832C | 2-13- 37 |
| MS20365-832C | 2-14- 28 |
| MS20365-832C | 2-14- 31 |
| MS20365-832C | 2-14- 35 |
| MS20365-832C | 2-19- 12 |
| MS20365-832C | 2-19- 21 |
| MS20365-832C | 2-19- 25 |
| MS20365-832C | 2-19- 28 |
| MS20365-832C | 3-1- 13 |
| MS20365-832C | 3-1- 21 |

| PART NUMBER | FIGURE AND INDEX NO. |
|---|---|
| MS20365-832C | 3-1- 23 |
| MS20365-832C | 3-2- 13 |
| MS20365-832C | 3-2- 21 |
| MS20365-832C | 3-2- 23 |
| MS20365-832C | 3-2- |
| MS20365-832C | 3-2- |
| MS20365-832C | 3-2- |
| MS20365-832C | 3-6- 25 |
| MS20365-832C | 4-1- 18 |
| MS20365-832C | 5-1- 5 |
| MS20365-832C | 5-1- 8 |
| MS20365-832C | 5-1- |
| MS20365-832C | 5-1- |
| MS20365-832C | 5-1- |
| MS20365-832C | 5-1- |
| MS20365-832C | 5-3- |
| MS20365-832C | 5-3- |
| MS20365-832C | 5-3- 21 |
| MS20365-832C | 5-3- |
| MS20365-832C | 5-3- |
| MS20365-832C | 5-3- |
| MS20365-832C | 5-3- 36 |
| MS20365-832C | 5-3- |
| MS20365-832C | 5-3- |
| MS20365-832C | 5-4- 6 |
| MS20365-832C | 5-4- 16 |
| MS20365-832C | 5-4- 20 |
| MS20365-832C | 5-4- |
| MS20365-832C | 5-4- 62 |
| MS20365-832C | 5-4- |
| MS20365-832C | 5-6- 7 |
| MS20365-832C | 5-6- |
| MS20365-832C | 5-6- |
| MS20365-832C | 5-6- |
| MS20365-832C | 5-7- 7 |
| MS20365-832C | 5-7- 12 |
| MS20365-832C | 5-7- 16 |
| MS20365-832C | 5-7- 36 |
| MS20365-832C | 5-7- 52 |
| MS20365-832C | 5-7- 55 |
| MS20365-832C | 6-1- |
| MS20365-832C | 6-1- 19 |
| MS20365-832C | 6-3- 22 |
| MS20365-832C | 6-5- 14 |
| MS20365-832C | 7-1- |
| MS20365-832C | 7-2- 10 |
| MS20365-832C | 7-2- |
| MS20365-832C | 7-2- |
| MS20365-832C | 7-3- 10 |
| MS20365-832C | 7-3- 17 |
| MS20365-832C | 7-3- 34 |
| MS20365-832C | 7-4- 9 |
| MS20365-832C | 7-4- 16 |
| MS20365-832C | 7-4- 33 |
| MS20365-832C | 9-1- |
| MS20365-832C | 9-1- |
| MS20365-832C | 9-1- |
| MS20365-832C | 9-1- |
| MS20365-832C | 9-3- 20 |
| MS20365-832C | 9-3- 23 |
| MS20365-832C | 9-7- |
| MS20365-832C | 10-5- 4 |
| MS20365-932C | 1-2- |
| MS20392-2-9 | 2-3- 38 |
| MS20392-2-9 | 2-3A- |
| MS20392-2-9 | 2-3A- 39 |
| MS20392-2-9 | 2-3B- |
| MS20392-2-9 | 2-3B- 43 |
| MS20392-2-9 | 2-3C- 38 |
| MS20392-2-9 | 2-3C- |
| MS20392-2-9 | 2-13- 41 |
| MS20392-2-9 | 2-13- |
| MS20392-2-9 | 2-14- |
| MS20392-2-9 | 2-14- 44 |
| MS20392-2-9 | 2-15- 33 |

| PART NUMBER | FIGURE AND INDEX NO. |
|---|---|
| MS20392-2-9 | 2-15- |
| MS20822-6D | 2-3A- 60 |
| MS20822-6D | 2-3B- 64 |
| MS20822-6D | 2-3C- 61 |
| MS20822-6D | 2-3D- 43 |
| MS20822-6D | 2-3E- 50 |
| MS20822-6D | 2-18- 76 |
| MS20823-6D | 2-16- 38 |
| MS20823-6D | 2-17- 38 |
| MS20826 | 2-16- 35 |
| MS20826 | 2-17- 35 |
| MS2466S-285 | 2-13- 31 |
| MS24665 | 2-14- 13 |
| MS24665 | 2-14- 17 |
| MS24665 | 2-16- |
| MS24665 | 2-17- |
| MS24665-132 | 2-3- 40 |
| MS24665-132 | 2-3D- |
| MS24665-132 | 2-3D- |
| MS24665-132 | 2-3D- |
| MS24665-132 | 2-16- |
| MS24665-132 | 2-16- |
| MS24665-132 | 2-17- |
| MS24665-132 | 2-17- |
| MS24665-134 | 2-3- 46 |
| MS24665-134 | 2-3A- 27 |
| MS24665-134 | 2-3B- 31 |
| MS24665-134 | 2-3C- 28 |
| MS24665-134 | 2-3E- 41 |
| MS24665-134 | 2-13- 18 |
| MS24665-134 | 2-13- 25 |
| MS24665-134 | 2-13- 44 |
| MS24665-134 | 2-13- |
| MS24665-134 | 2-14- 22 |
| MS24665-134 | 2-14- |
| MS24665-134 | 2-14- 47 |
| MS24665-134 | 2-15- 20 |
| MS24665-134 | 2-15- 24 |
| MS24665-134 | 2-15- 36 |
| MS24665-134 | 2-15- |
| MS24665-134 | 2-16- 12 |
| MS24665-134 | 2-16- 17 |
| MS24665-134 | 2-17- 12 |
| MS24665-134 | 2-17- 17 |
| MS24665-134 | 2-18- 30 |
| MS24665-287 | 2-18- 72 |
| MS25041-1 | 1-2- |
| MS25041-1 | 2-5- |
| MS25041-1-328 | 2-9- 12 |
| MS25041-1-328 | 2-9- 27 |
| MS25041-1-328 | 2-9- 35 |
| MS25041-1-328 | 2-9- 50 |
| MS25041-1-328 | 2-9- 61 |
| MS25041-1-328 | 2-9- 74 |
| MS25041-10 | 1-2- |
| MS25041-10 | 2-5- |
| MS25041-10-328 | 2-9- 11 |
| MS25041-10-328 | 2-9- 25 |
| MS25041-10-328 | 2-9- 34 |
| MS25041-10-328 | 2-9- 48 |
| MS25041-10-328 | 2-9- 59 |
| MS25041-10-328 | 2-9- 73 |
| MS25041-4 | 1-2- |
| MS25041-4 | 2-5- |
| MS25041-4-328 | 2-9- 10 |
| MS25041-4-328 | 2-9- 23 |
| MS25041-4-328 | 2-9- 33 |
| MS25041-4-328 | 2-9- 46 |
| MS25041-4-328 | 2-9- 57 |
| MS25041-4-328 | 2-9- 72 |
| MS25237-328 | 1-2- 55 |
| MS25237-328 | 2-5- |
| MS25237-328 | 2-9- |
| MS25237-328 | 2-9- |
| MS25237-328 | 2-9- |

| PART NUMBER | FIGURE AND INDEX NO. |
|---|---|
| MS25237-328 | 2-9- 24 |
| MS25237-328 | 2-9- 26 |
| MS25237-328 | 2-9- 28 |
| MS25237-328 | 2-9- |
| MS25237-328 | 2-9- |
| MS25237-328 | 2-9- |
| MS25237-328 | 2-9- 47 |
| MS25237-328 | 2-9- 49 |
| MS25237-328 | 2-9- 51 |
| MS25237-328 | 2-9- 58 |
| MS25237-328 | 2-9- 60 |
| MS25237-328 | 2-9- 62 |
| MS25237-328 | 2-9- |
| MS25237-328 | 2-9- |
| MS25237-328 | 2-9- |
| MS3057-10 | 7-1- 52 |
| MS3057-10A | 2-8- |
| MS3057-10B | 6-1- 65 |
| MS3057-10B | 6-7- 82 |
| MS3057-10B | 6-8- 92 |
| MS3057-10B | 6-9- 72 |
| MS3057-10B | 6-10- 65 |
| MS3057-10B | 6-11- 64 |
| MS3057-10B | 7-2- 37 |
| MS3057-10B | 7-3- 50 |
| MS3057-10B | 7-4- 49 |
| MS3057-10B | 6-3- 71 |
| MS3057-10B | 6-5- 56 |
| MS3057-12 | 5-8- |
| MS3057-12 | 5-8- |
| MS3057-12A | 2-12- |
| MS3057-12A | 5-3- |
| MS3057-12A | 5-3- |
| MS3057-12B | 6-8- |
| MS3057-12B | 7-1- |
| MS3065-832C | 2-2- 14 |
| MS3100A-20-15S | 7-1- |
| MS3106A-20-15P | 6-8- |
| MS3106A-20-15P | 7-1- |
| MS3106A-20-27S | 2-12- |
| MS3106A-20-27S | 5-8- |
| MS3106A-20-27S | 5-8- |
| MS3106A-20-29S | 5-3- |
| MS3106A-20-29S | 5-3- |
| MS3106A-22-14S | 5-6- |
| MS3106A10SL-3S | 2-1- |
| MS3106A10SL-3S | 3-2- |
| MS3106A10SL-3S | 3-2- |
| MS3106A14S-6S | 2-1- |
| MS3106A18-1S | 2-8- |
| MS3106A18IS | 2-8- |
| MS35489-A/R | 5-6- |
| MS35489-S19 | 3-1- 41 |
| MS35489-S19 | 3-2- 43 |
| MS35489-S19 | 5-3- 56 |
| MS35489-10S | 2-3- 50 |
| MS35489-11 | 9-1- 20 |
| MS35489-11S | 1-1- 17 |
| MS35489-11S | 2-4- 22 |
| MS35489-11S | 7-5- 9 |
| MS35489-12 | 1-3- 44 |
| MS35489-12 | 1-4- 38 |
| MS35489-12S | 2-1- 45 |
| MS35489-19 | 6-5- 63 |
| MS35489-19 | 6-6- 23 |
| MS35489-19S | 2-2- |
| MS35489-2S | 8-4- 17 |
| MS525-10R9 | 2-15- 15 |
| M359 | 7-1- 48 |
| NAS221-19 | 8-3- 3 |
| NAS287-25-3 | 2-18- 23 |
| NAS287-25-3 | 2-18- 25 |
| NAS287-25-3 | 2-18- 37 |
| NAS345-10 | 8-1- 3 |
| NAS395-11-3 | 9-3- 36 |

| PART NUMBER | FIGURE AND INDEX NO. |
|---|---|
| NAS395-11-3 | 9-3- 39 |
| NAS395-14-3 | 2-1- 14 |
| NAS395-14-3 | 3-1- 49 |
| NAS395-14-3 | 3-3- |
| NAS395-14-3 | 5-8- 9 |
| NAS395-14-3 | 9-1- |
| NAS395-14-3 | 9-1- |
| NAS395-14-3 | 9-1- |
| NAS395-16-3 | 2-11- 5 |
| NAS395-16-3 | 2-11- 12 |
| NAS395-16-3 | 2-12- 3 |
| NAS395-16-3 | 2-12- 10 |
| NAS395-18-3 | 5-1- |
| NAS395-18-3 | 5-2- 3 |
| NAS395-18-3 | 5-3- 9 |
| NAS395-3-3 | 3-1- 7 |
| NAS395-3-3 | 3-2- 7 |
| NAS395-6-3 | 6-12- 12 |
| NAS395-8-8 | 3-3- |
| NAS397-10 | 2-16- 50 |
| NAS397-10 | 2-17- 50 |
| NAS397-14 | 10-1- 59 |
| NAS397-16 | 10-1- 4 |
| NAS397-16 | 10-1- 10 |
| NAS397-16 | 10-1- 16 |
| NAS397-16 | 10-1- 24 |
| NAS397-16 | 10-1- 38 |
| NAS397-16 | 10-1- 50 |
| NAS397-16 | 10-1- 54 |
| NAS43-3-12 | 7-2- 47 |
| NAS43-3-15 | 2-3E- 31 |
| NAS43-3-15 | 2-18- 16 |
| NAS43-3-16 | 1-3- |
| NAS43-3-22 | 6-8- 41 |
| NAS43-3-22 | 7-1- 12 |
| NAS43-3-36 | 6-8- 40 |
| NAS43-3-36 | 7-1- 11 |
| NAS43-3-44 | 6-7- 22 |
| NAS43-3-52 | 7-1- |
| NAS43-3-8 | 6-7- 13 |
| NAS43-3-8 | 6-8- 16 |
| NAS43-3-8 | 6-8- 26 |
| NAS43-4-32 | 5-1- |
| NAS43-4-32 | 5-1- |
| NAS43DD1-12 | 2-1- 19 |
| NAS43DD1-16 | 2-1- 21 |
| NAS43DD1-16 | 9-1- |
| NAS43DD1-60 | 9-1- 47 |
| NAS43DD1-60 | 9-1- 96 |
| NAS43DD3-24 | 9-3- 45 |
| NAS43DD3-24 | 9-3- 53 |
| NAS43DD3-48 | 2-3E- |
| NAS43DD3-60 | 6-7- 34 |
| NAS43DD3-8 | 2-1- 7 |
| NAS43DD3-8 | 2-1- 10 |
| NAS43DD4-32 | 2-3A- |
| NAS43DD4-32 | 2-3B- |
| NAS43DD4-32 | 2-3C- |
| NAS43DD4-32 | 2-3D- |
| NAS435D6 | 7-4- 39 |
| NAS435D6 | 7-2- 44 |
| NAS435D6 | 7-3- 40 |
| NAS437-4B | 2-16- 49 |
| NAS437-4B | 2-17- 49 |
| NAS443-2-3 | 3-1- |
| NAS443-3-16 | 2-6- |
| NAS446-1-3 | 9-4- 65 |
| NAS446-2-3 | 1-1- |
| NAS446-2-3 | 1-2- |
| NAS446-2-3 | 1-2- |
| NAS446-2-3 | 1-3- |
| NAS446-2-3 | 1-3- |
| NAS446-2-3 | 1-4- |
| NAS446-2-3 | 1-4- |
| NAS446-2-3 | 2-1- 3 |

| PART NUMBER | FIGURE AND INDEX NO. |
|---|---|
| NAS446-2-3 | 2-2- |
| NAS446-2-3 | 2-2- |
| NAS446-2-3 | 2-3B- 8 |
| NAS446-2-3 | 2-4- |
| NAS446-2-3 | 2-5- |
| NAS446-2-3 | 2-5- |
| NAS446-2-3 | 2-6- |
| NAS446-2-3 | 2-6- |
| NAS446-2-3 | 2-7- |
| NAS446-2-3 | 2-7- |
| NAS446-2-3 | 2-8- 14 |
| NAS446-2-3 | 2-8- |
| NAS446-2-3 | 2-10- |
| NAS446-2-3 | 2-11- |
| NAS446-2-3 | 2-12- |
| NAS446-2-3 | 3-1- 5 |
| NAS446-2-3 | 3-2- 5 |
| NAS446-2-3 | 3-2- |
| NAS446-2-3 | 3-3- |
| NAS446-2-3 | 3-3- |
| NAS446-2-3 | 3-3- |
| NAS446-2-3 | 4-1- |
| NAS446-2-3 | 5-1- |
| NAS446-2-3 | 5-1- |
| NAS446-2-3 | 5-2- |
| NAS446-2-3 | 5-3- 5 |
| NAS446-2-3 | 5-3- |
| NAS446-2-3 | 5-4- |
| NAS446-2-3 | 5-4- |
| NAS446-2-3 | 5-5- |
| NAS446-2-3 | 5-6- |
| NAS446-2-3 | 5-7- 33 |
| NAS446-2-3 | 5-8- 3 |
| NAS446-2-3 | 5-8- |
| NAS446-2-3 | 6-1- |
| NAS446-2-3 | 6-1- 53 |
| NAS446-2-3 | 6-2- |
| NAS446-2-3 | 6-3- |
| NAS446-2-3 | 6-3- 55 |
| NAS446-2-3 | 6-4- |
| NAS446-2-3 | 6-5- |
| NAS446-2-3 | 6-5- 48 |
| NAS446-2-3 | 6-6- |
| NAS446-2-3 | 6-7- |
| NAS446-2-3 | 6-7- 66 |
| NAS446-2-3 | 6-8- |
| NAS446-2-3 | 6-8- 79 |
| NAS446-2-3 | 6-9- |
| NAS446-2-3 | 6-9- 57 |
| NAS446-2-3 | 6-10- |
| NAS446-2-3 | 6-10- 49 |
| NAS446-2-3 | 6-11- |
| NAS446-2-3 | 6-11- 49 |
| NAS446-2-3 | 6-12- |
| NAS446-2-3 | 7-1- |
| NAS446-2-3 | 7-2- |
| NAS446-2-3 | 7-2- 50 |
| NAS446-2-3 | 7-3- |
| NAS446-2-3 | 7-3- 52 |
| NAS446-2-3 | 7-4- |
| NAS446-2-3 | 7-4- 51 |
| NAS446-2-3 | 7-6- 11 |
| NAS446-2-3 | 8-4- 3 |
| NAS446-2-3 | 9-1- |
| NAS446-2-3 | 9-1- |
| NAS446-2-3 | 9-1- 19 |
| NAS446-2-3 | 9-1- |
| NAS446-2-3 | 9-1- |
| NAS446-2-3 | 9-1- |
| NAS446-2-3 | 9-4- 14 |
| NAS446-2-3 | 9-4- 50 |
| NAS446-2-3 | 9-4- 78 |
| NAS446-3-3 | 9-1- 8 |
| NAS446-4 | 10-1- 57 |
| NAS446-4-3 | 2-2- |

| PART NUMBER | FIGURE AND INDEX NO. |
|---|---|
| NAS446-4-3 | 2-2- 6 |
| NAS446-4-3 | 2-2- |
| NAS446-4-3 | 3-1- 48 |
| NAS446-4-3 | 3-3- |
| NAS446-4-3 | 3-6- |
| NAS446-4-3 | 3-7- |
| NAS446-4-3 | 4-1- 19 |
| NAS446-4-3 | 5-8- 8 |
| NAS446-4-3 | 7-1- |
| NAS446-4-3 | 7-1- |
| NAS446-4-3 | 9-3- 9 |
| NAS446-4-3 | 10-5- 2 |
| NAS446-5-3 | 3-3- 23 |
| NAS448-1-3J | 7-5- 27 |
| NAS487-20 | 2-12- |
| NAS487-21 | 2-3E- 9 |
| NAS488-1-3 | 7-6- 18 |
| NAS557-10A | 2-2- |
| NAS557-10A | 3-2- 61 |
| NAS557-10A | 6-3- 66 |
| NAS557-10A | 6-4- 27 |
| NAS557-3A | 5-6- |
| NAS557-3A | 5-7- 42 |
| NAS557-6A | 5-6- |
| NAS557-6A | 5-7- |
| NAS557-8A | 3-1- 43 |
| NAS557-8A | 3-2- 45 |
| NAS557-8A | 5-3- |
| NAS557-8A | 5-3- |
| NAS679A04 | 3-6- 9 |
| NAS679A04 | 6-7- |
| NAS679A04 | 6-8- |
| NAS679A04 | 6-9- |
| NAS679A04 | 6-10- |
| NAS679A04 | 6-11- |
| NAS679A06 | 2-3B- 4 |
| NAS679A06 | 2-9- |
| NAS679A06 | 6-7- 42 |
| NAS679A06 | 6-8- 53 |
| NAS679A06 | 6-9- |
| NAS679A06 | 6-10- 25 |
| NAS679A06 | 6-10- 29 |
| NAS679A06 | 6-11- 23 |
| NAS679A08 | 3-1- |
| NAS679A08 | 3-1- |
| NAS679A08 | 3-6- 14 |
| NAS679A08 | 3-6- 17 |
| NAS679A08 | 3-6- 21 |
| NAS679A08 | 3-6- 30 |
| NAS679A08 | 3-6- 33 |
| NAS679A08 | 5-8- |
| NAS679A08 | 5-8-23C |
| NAS679A08 | 5-8- |
| NAS679A08 | 5-8-24C |
| NAS679A08 | 5-8- |
| NAS679A08 | 5-8- |
| NAS679A08 | 5-8- |
| NAS679A08 | 6-7- 7 |
| NAS679A08 | 6-7- 10 |
| NAS679A08 | 6-7- 14 |
| NAS679A08 | 6-7- 19 |
| NAS679A08 | 6-7- 26 |
| NAS679A08 | 6-7- 35 |
| NAS679A08 | 6-7- 40 |
| NAS679A08 | 6-8- 4 |
| NAS679A08 | 6-8- 8 |
| NAS679A08 | 6-8- 12 |
| NAS679A08 | 6-8- 17 |
| NAS679A08 | 6-8- 20 |
| NAS679A08 | 6-8- 23 |
| NAS679A08 | 6-8- 27 |
| NAS679A08 | 6-8- 32 |
| NAS679A08 | 6-9- 9 |
| NAS679A08 | 6-9- 12 |
| NAS679A08 | 6-9- 17 |

| PART NUMBER | FIGURE AND INDEX NO. |
|---|---|
| NAS679A08 | 6-9- 26 |
| NAS679A08 | 6-9- |
| NAS679A08 | 6-10- 5 |
| NAS679A08 | 6-10- 9 |
| NAS679A08 | 6-10- 11 |
| NAS679A08 | 6-10- 14 |
| NAS679A08 | 6-10- 20 |
| NAS679A08 | 6-11- 6 |
| NAS679A08 | 6-11- 8 |
| NAS679A08 | 6-11- 11 |
| NAS679A08 | 6-11- 18 |
| NAS679A08 | 6-11- 27 |
| NAS679A08 | 6-12- 6 |
| NAS679A08 | 6-12- 9 |
| NAS679A3 | 2-16- 22 |
| NAS679A3 | 2-17- 22 |
| NAS679A3 | 6-7- 23 |
| NAS679A3 | 6-8- 44 |
| NAS680A06 | 3-5- |
| NAS680A06 | 3-5- |
| NAS680A06 | 6-5- |
| NAS680A08 | 7-2- 48 |
| NAS686 | 2-6- |
| NAS686-A3 | 8-2- |
| NAS686A08K | 3-4- 2 |
| NAS686A08K | 3-4- 2 |
| NAS686A08K | 9-1- |
| NAS686A08K | 9-1- |
| NAS686A3 | 2-2- |
| NAS686A3 | 2-2- |
| NAS686A3 | 2-2- |
| NAS686A3 | 2-2- |
| NAS686A3 | 2-2- |
| NAS686A3 | 8-1- |
| NAS686A3 | 8-1- |
| NAS686A3 | 9-3- |
| NAS686A3 | 9-3- |
| NAS686A3 | 9-3- |
| NAS686A3 | 9-3- |
| NAS686A3 | 9-3- |
| NAS686A3 | 9-3- |
| NAS686A3 | 9-3- |
| NAS686A3 | 9-3- |
| NAS686A3 | 5-3- |
| NAS686A3 | 5-3- |
| NAS686A3 | 5-3- |
| NAS686A3 | 5-4- 28 |
| NAS686A3 | 5-6- |
| NAS686A385 | 1-3- |
| NAS687A08 | 2-2- |
| NAS687A08 | 2-2- |
| NAS687A08 | 5-3- |
| NAS687A08 | 5-3- |
| NAS696A06LK | 2-1- 9 |
| NAS696A06LK | 2-1- 27 |
| NAS696A08 | 2-3- 31 |
| NAS696A08 | 2-3A- 50 |
| NAS696A08 | 2-3B- 54 |
| NAS696A08 | 2-3C- 51 |
| NAS696A08 | 2-13- 67 |
| NAS696A08 | 2-14- 67 |
| NAS696A08 | 2-15- 57 |
| NAS696A08 | 6-3- |
| NAS696A3 | 2-2- |
| NAS696A3 | 2-2- |
| NAS696A3 | 5-1- |
| NAS696A3 | 5-1- |
| NAS696A3 | 5-3- |
| NAS696A3 | 5-3- |
| NAS696A3 | 5-4- |
| NAS696A3 | 5-4- |
| NAS696A3 | 5-4- |
| NAS696A3 | 5-4- |
| NAS696A3 | 5-6- |
| NAS696A3K | 6-8- |

| PART NUMBER | FIGURE AND INDEX NO. |
|---|---|
| NAS697A06 | 2-1- |
| NAS697A06 | 2-16- 5 |
| NAS697A06 | 2-17- 5 |
| NAS697A06 | 3-3- |
| NAS697A06 | 3-3- |
| NAS697A06L | 2-2- |
| NAS697A06L | 2-2- |
| NAS697A06L | 2-19- 51 |
| NAS697A06L | 3-1- |
| NAS697A06L | 5-8- 4 |
| NAS697A06L | 5-8- |
| NAS697A06L | 5-9- |
| NAS697A06L | 6-1- 45 |
| NAS697A06L | 6-3- 47 |
| NAS697A06L | 6-5- 40 |
| NAS697A06L | 6-7- 55 |
| NAS697A06L | 6-8- 68 |
| NAS697A06L | 6-9- 46 |
| NAS697A06L | 6-10- 38 |
| NAS697A06L | 6-11- 38 |
| NAS697A06L | 7-2- 55 |
| NAS697A06L | 7-3- 57 |
| NAS697A06L | 7-4- 56 |
| NAS697A06L | 10-5- 15 |
| NAS697A06L | 10-5- 18 |
| NAS697A06LK | 2-1- 6 |
| NAS697A06LK | 2-1- 18 |
| NAS697A06LK | 2-1- 25 |
| NAS697A08 | 2-3- 32 |
| NAS697A08 | 2-3A- 49 |
| NAS697A08 | 2-3B- 53 |
| NAS697A08 | 2-3C- 50 |
| NAS697A08 | 2-13- 66 |
| NAS697A08 | 2-14- 66 |
| NAS697A08 | 2-15- 56 |
| NAS697A08 | 5-9- 8 |
| NAS697A08 | 6-3- |
| NAS697A3 | 5-1- |
| NAS697A3 | 5-1- |
| NAS697A3 | 5-3- |
| NAS697A3 | 5-3- |
| NAS697A3 | 5-4- |
| NAS697A3 | 5-4- |
| NAS697A3 | 5-4- |
| NAS697A3 | 5-4- |
| NAS697A4 | 6-1- |
| NAS697A4 | 6-1- |
| NAS697A4 | 6-3- |
| NAS697A4 | 6-5- |
| NAS697A4 | 7-2- |
| NAS698A08 | 7-5- |
| NO PART NO. | 7-6- 12 |
| NO. 300 | 6-7- 62 |
| NO. 300 | 6-7- 64 |
| NO. 300 | 6-8- 75 |
| NO. 300 | 6-8- 77 |
| NO. 300 | 6-9- 53 |
| NO. 300 | 6-9- 55 |
| NO. 300 | 6-10- 45 |
| NO. 300 | 6-10- 47 |
| NO. 300 | 6-11- 45 |
| NO. 300 | 6-11- 47 |
| PA-1018 | 9-1- 33 |
| PA-2021 | 9-1- 14 |
| PC500B | 3-2- |
| PL-112 | 7-4- 48 |
| PL-112 | 6-1- 64 |
| PL-112 | 6-3- 70 |
| PL-112 | 6-5- 55 |
| PL-112 | 6-7- 81 |
| PL-112 | 6-8- 91 |
| PL-112 | 6-9- 71 |
| PL-112 | 6-10- 64 |
| PL-112 | 6-11- 63 |
| PL-112 | 7-1- 51 |

| PART NUMBER | FIGURE AND INDEX NO. |
|---|---|
| PL-112 | 7-2- 36 |
| PL-112 | 7-3- 49 |
| PL-259 | 7-4- 27 |
| PL-259 | 7-4- 30 |
| PL-259 | 7-5- |
| PL-259 | 4-1- |
| PL-259 | 6-1- |
| PL-259 | 6-1- |
| PL-259 | 6-2- |
| PL-259 | 6-3- |
| PL-259 | 6-4- |
| PL-259 | 6-5- |
| PL-259 | 6-6- |
| PL-259 | 6-7- 78 |
| PL-259 | 6-7- |
| PL-259 | 6-8- 96 |
| PL-259 | 6-8- |
| PL-259 | 6-9- 68 |
| PL-259 | 6-9- |
| PL-259 | 6-10- 61 |
| PL-259 | 6-10- |
| PL-259 | 6-11- 60 |
| PL-259 | 6-11- |
| PL-259 | 6-12- |
| PL-259 | 7-1- |
| PL-259 | 7-1- |
| PL-259 | 7-2- 29 |
| PL-259 | 7-2- 31 |
| PL-259 | 7-3- 28 |
| PL-259 | 7-3- 31 |
| PSM-10N | 4-1- 27 |
| PSM-10N | 5-1- 39 |
| PSM-10N | 5-1- |
| PSM-10N | 5-2- 20 |
| PSM-10N | 5-3- 53 |
| PSM-10N | 5-4- 32 |
| PSM-10N | 5-4- 74 |
| PSM-15N | 2-2- 42 |
| PSM-15N | 3-1- |
| PSM-15N | 3-2- 40 |
| PSM-15N | 3-2- 62 |
| PSM-15N | 3-3- 9 |
| PSM-15N | 7-1- 54 |
| PSM-5N | 2-1- 35 |
| R-12 1/2-75-RS34 | 1-1- 22 |
| R-12 1/2-75-RS34 | 1-2- 49 |
| R-12 1/2-75-RS34 | 1-3- 38 |
| R-12 1/2-75-RS34 | 1-4- 31 |
| R-12 1/2-75-RS34 | 2-1- 41 |
| R-12 1/2-75-RS34 | 2-2- 48 |
| R-12 1/2-75-RS34 | 2-4- 48 |
| R-12 1/2-75-RS34 | 2-5- 64 |
| R-12 1/2-75-RS34 | 2-6- 58 |
| R-12 1/2-75-RS34 | 2-7- 58 |
| R-12 1/2-75-RS34 | 2-8- 25 |
| R-12 1/2-75-RS34 | 2-11- 20 |
| R-12 1/2-75-RS34 | 2-12- 58 |
| R-12 1/2-75-RS34 | 2-15- |
| R-12 1/2-75-RS34 | 2-19- 35 |
| R-12 1/2-75-RS34 | 3-1- 35 |
| R-12 1/2-75-RS34 | 3-2- 37 |
| R-12 1/2-75-RS34 | 3-3- 16 |
| R-12 1/2-75-RS34 | 3-6- 59 |
| R-12 1/2-75-RS34 | 5-3- 57 |
| R-12 1/2-75-RS34 | 5-6- 35 |
| R-12 1/2-75-RS34 | 5-8- 45 |
| R-12 1/2-75-RS34 | 6-1- 59 |
| R-12 1/2-75-RS34 | 6-2- 19 |
| R-12 1/2-75-RS34 | 6-3- 61 |
| R-12 1/2-75-RS34 | 6-4- 22 |
| R-12 1/2-75-RS34 | 6-5- 58 |
| R-12 1/2-75-RS34 | 6-6- 18 |
| R-12 1/2-75-RS34 | 6-9- 63 |
| R-12 1/2-75-RS34 | 6-10- 56 |
| R-12 1/2-75-RS34 | 6-11- 55 |

| PART NUMBER | FIGURE AND INDEX NO. |
|---|---|
| R-12 1/2-75-RS34 | 7-2- 64 |
| R-12 1/2-75-RS34 | 7-3- 66 |
| R-12 1/2-75-RS34 | 7-4- 65 |
| RA-2487-2 | 6-8- 58 |
| RA2482-3 | 2-18- 48 |
| RA2487-2 | 7-4- 21 |
| RA2487-2 | 6-1- 24 |
| RA2487-2 | 6-3- 35 |
| RA2487-2 | 6-5- 27 |
| RA2487-2 | 6-7- 48 |
| RA2487-2 | 6-9- 39 |
| RA2487-2 | 6-10- 33 |
| RA2487-2 | 6-11- 32 |
| RA2487-2 | 7-1- 28 |
| RA2487-2 | 7-2- 22 |
| RA2487-2 | 7-3- 22 |
| RA2500-3 | 2-18- 22 |
| RG-114/U | 4-1- |
| RG-58A/U | 1-1- |
| RG-58A/U | 1-2- |
| RG-58A/U | 1-2- |
| RG-58A/U | 1-2- |
| RG-58A/U | 1-2- |
| RG-58A/U | 1-2- |
| RG-58A/U | 1-2- |
| RG-58A/U | 1-2- |
| RG-58A/U | 1-2- |
| RG-58A/U | 1-4- |
| RG-58A/U | 1-4- |
| RG-58A/U | 1-4- |
| RG-58A/U | 1-4- |
| RG-58A/U | 1-4- |
| RG-58A/U | 1-4- |
| RG-58A/U | 1-4- |
| RG-58A/U | 2-2- |
| RG-58A/U | 2-2- |
| RG-58A/U | 2-2- |
| RG-58A/U | 2-2- |
| RG-58A/U | 2-2- |
| RG-58A/U | 2-2- |
| RG-58A/U | 2-2- |
| RG-58A/U | 2-2- |
| RG-58A/U | 2-2- |
| RG-58A/U | 2-2- |
| RG-58A/U | 2-4- |
| RG-58A/U | 2-5- |
| RG-58A/U | 2-5- |
| RG-58A/U | 2-5- |
| RG-58A/U | 2-5- |
| RG-58A/U | 2-5- |
| RG-58A/U | 2-5- |
| RG-58A/U | 2-7- |
| RG-58A/U | 2-7- |
| RG-58A/U | 2-7- |
| RG-58A/U | 2-7- |
| RG-58A/U | 2-7- |
| RG-58A/U | 2-7- |
| RG-58A/U | 2-7- |
| RG-58A/U | 2-8- |
| RG-58A/U | 2-8- |
| RG-58A/U | 2-8- |
| RG-58A/U | 2-8- |
| RG-58A/U | 2-8- |
| RG-58A/U | 2-8- 48 |
| RG-58A/U | 2-8- 51 |
| RG-58A/U | 2-8- 53 |
| RG-58A/U | 2-8- |
| RG-58A/U | 2-9- |
| RG-58A/U | 2-11- |
| RG-58A/U | 2-12- |
| RG-58A/U | 2-12- |
| RG-58A/U | 2-12- |
| RG-58A/U | 2-12- |
| RG-58A/U | 2-12- |
| RG-58A/U | 2-12- 77 |
| RG-58A/U | 3-1- |

| PART NUMBER | FIGURE AND INDEX NO. |
|---|---|
| RG-58A/U | 3-1- |
| RG-58A/U | 3-2- |
| RG-58A/U | 3-2- |
| RG-58A/U | 3-2- |
| RG-58A/U | 3-2- |
| RG-58A/U | 3-2- |
| RG-58A/U | 3-3- |
| RG-58A/U | 3-3- |
| RG-58A/U | 3-3- |
| RG-58A/U | 3-3- |
| RG-58A/U | 3-3- |
| RG-58A/U | 3-3- |
| RG-58A/U | 3-3- 35 |
| RG-58A/U | 3-3- |
| RG-58A/U | 3-3- |
| RG-58A/U | 3-5- |
| RG-58A/U | 7-4- 26 |
| RG-58A/U | 7-4- 29 |
| RG-58A/U | 7-4- 41 |
| RG-58A/U | 7-4- |
| RG-58A/U | 7-4- |
| RG-58A/U | 7-5- |
| RG-58A/U | 3-5- |
| RG-58A/U | 3-5- |
| RG-58A/U | 3-5- |
| RG-58A/U | 3-5- |
| RG-58A/U | 3-5- 41 |
| RG-58A/U | 3-5- 46 |
| RG-58A/U | 3-6- |
| RG-58A/U | 3-6- |
| RG-58A/U | 3-6- |
| RG-58A/U | 3-6- |
| RG-58A/U | 3-6- |
| RG-58A/U | 3-6- 50 |
| RG-58A/U | 3-6- 53 |
| RG-58A/U | 5-1- |
| RG-58A/U | 5-1- |
| RG-58A/U | 5-1- |
| RG-58A/U | 5-1- |
| RG-58A/U | 5-1- |
| RG-58A/U | 5-1- |
| RG-58A/U | 5-2- |
| RG-58A/U | 5-2- |
| RG-58A/U | 5-3- |
| RG-58A/U | 5-3- |
| RG-58A/U | 5-3- |
| RG-58A/U | 5-3- |
| RG-58A/U | 5-3- |
| RG-58A/U | 5-3- |
| RG-58A/U | 5-3- |
| RG-58A/U | 5-4- |
| RG-58A/U | 5-4- |
| RG-58A/U | 5-4- |
| RG-58A/U | 5-4- |
| RG-58A/U | 5-4- |
| RG-58A/U | 5-4- 51 |
| RG-58A/U | 5-4- |
| RG-58A/U | 5-4- |
| RG-58A/U | 5-5- |
| RG-58A/U | 5-6- |
| RG-58A/U | 5-6- |
| RG-58A/U | 5-7- |
| RG-58A/U | 5-8- |
| RG-58A/U | 5-8- |
| RG-58A/U | 5-8- |
| RG-58A/U | 5-8- |
| RG-58A/U | 5-8- |
| RG-58A/U | 5-8- 57 |
| RG-58A/U | 5-8- 59 |
| RG-58A/U | 5-8- |
| RG-58A/U | 5-8- |
| RG-58A/U | 5-9- |
| RG-58A/U | 6-1- |
| RG-58A/U | 6-1- |
| RG-58A/U | 6-1- |

| PART NUMBER | FIGURE AND INDEX NO. |
|---|---|
| RG-58A/U | 6-2- |
| RG-58A/U | 6-2- |
| RG-58A/U | 6-3- |
| RG-58A/U | 6-3- |
| RG-58A/U | 6-3- |
| RG-58A/U | 6-4- |
| RG-58A/U | 6-4- |
| RG-58A/U | 6-5- |
| RG-58A/U | 6-5- |
| RG-58A/U | 6-5- |
| RG-58A/U | 6-6- |
| RG-58A/U | 6-6- |
| RG-58A/U | 6-7- |
| RG-58A/U | 6-7- |
| RG-58A/U | 6-7- |
| RG-58A/U | 6-7- |
| RG-58A/U | 6-8- |
| RG-58A/U | 6-8- |
| RG-58A/U | 6-8- 93 |
| RG-58A/U | 6-8- |
| RG-58A/U | 6-8- |
| RG-58A/U | 6-8- |
| RG-58A/U | 6-9- |
| RG-58A/U | 6-9- |
| RG-58A/U | 6-9- |
| RG-58A/U | 6-9- |
| RG-58A/U | 6-9- |
| RG-58A/U | 6-10- |
| RG-58A/U | 6-10- |
| RG-58A/U | 6-10- |
| RG-58A/U | 6-10- |
| RG-58A/U | 6-10- |
| RG-58A/U | 6-11- |
| RG-58A/U | 6-11- |
| RG-58A/U | 6-11- |
| RG-58A/U | 6-11- |
| RG-58A/U | 6-11- |
| RG-58A/U | 6-12- |
| RG-58A/U | 7-1- |
| RG-58A/U | 7-1- |
| RG-58A/U | 7-1- |
| RG-58A/U | 7-2- 28 |
| RG-58A/U | 7-2- 30 |
| RG-58A/U | 7-2- 32 |
| RG-58A/U | 7-2- |
| RG-58A/U | 7-2- |
| RG-58A/U | 7-3- 27 |
| RG-58A/U | 7-3- 30 |
| RG-58A/U | 7-3- 42 |
| RG-58A/U | 7-3- |
| RG-58A/U | 7-3- |
| R12 1/2-75-RS34 | 2-16- |
| R12 1/2-75-RS34 | 2-17- |
| R12 1/2-75-RS34 | 4-1- 24 |
| S-1291-4 | 2-18- |
| S-1360-5 | 2-18- 79 |
| S-378-1 | 2-18- 15 |
| SP-10010 | 7-4- 2 |
| SP-10010 | 6-1- 3 |
| SP-10010 | 6-3- 10 |
| SP-10010 | 6-5- 3 |
| SP-10010 | 7-3- 2 |
| SP10010 | 6-7- 20 |
| SP10010 | 6-8- 33 |
| SP10010 | 6-9- 18 |
| SP10010 | 6-10- 15 |
| SP10010 | 6-11- 12 |
| SS-48151 | 9-1- |
| SS-48151 | 9-1- |
| SS-48151 | 9-1- 93 |
| SS-51045-K2215 | 2-3A- 62 |
| SS-51045-K2215 | 2-3B- 66 |
| SS-51045-K2215 | 2-3C- 63 |
| SS-51045-K2215 | 2-3D- 45 |
| SS-51045-K2215 | 2-3E- 55 |

| PART NUMBER | FIGURE AND INDEX NO. |
|---|---|
| S0-239 | 8-6- |
| S1021-6-8 | 6-3- 56 |
| S1021A4-6 | 9-1- |
| S1021A6-6 | 9-4- 35 |
| S1021Z-6-6 | 6-7- |
| S1021Z10-10 | 3-3- 22 |
| S1021Z4-4 | 9-4- 64 |
| S1021Z4-6 | 9-4- 40 |
| S1021Z4-6 | 9-4- 42 |
| S1021Z6-10 | 9-1- |
| S1021Z6-12 | 5-3- 7 |
| S1021Z6-4 | 7-5- 26 |
| S1021Z6-4 | 7-6- 17 |
| S1021Z6-4 | 6-12- 13 |
| S1021Z6-6 | 2-3B- 7 |
| S1021Z6-6 | 2-9- 40 |
| S1021Z6-6 | 3-1- 3 |
| S1021Z6-6 | 3-1- 6 |
| S1021Z6-6 | 3-1- 14 |
| S1021Z6-6 | 3-2- 3 |
| S1021Z6-6 | 3-2- 6 |
| S1021Z6-6 | 3-2- |
| S1021Z6-6 | 9-1- |
| S1021Z6-6 | 9-1- |
| S1021Z6-6 | 9-4- 49 |
| S1021Z6-6 | 9-4- 77 |
| S1021Z6-6 | 4-1- |
| S1021Z6-6 | 5-1- |
| S1021Z6-6 | 5-1- |
| S1021Z6-6 | 5-2- |
| S1021Z6-6 | 5-3- 3 |
| S1021Z6-6 | 5-3- |
| S1021Z6-6 | 5-5- |
| S1021Z6-6 | 5-7- 32 |
| S1021Z6-6 | 5-8- 2 |
| S1021Z6-6 | 5-8- |
| S1021Z6-8 | 1-1- |
| S1021Z6-8 | 1-2- |
| S1021Z6-8 | 1-3- |
| S1021Z6-8 | 1-4- |
| S1021Z6-8 | 2-4- |
| S1021Z6-8 | 2-5- |
| S1021Z6-8 | 2-6- |
| S1021Z6-8 | 2-7- |
| S1021Z6-8 | 2-8- 12 |
| S1021Z6-8 | 2-8- 13 |
| S1021Z6-8 | 2-8- |
| S1021Z6-8 | 2-9- 17 |
| S1021Z6-8 | 7-4- 46 |
| S1021Z6-8 | 7-4- 50 |
| S1021Z6-8 | 8-4- 2 |
| S1021Z6-8 | 9-1- |
| S1021Z6-8 | 9-1- 7 |
| S1021Z6-8 | 9-1- |
| S1021Z6-8 | 9-1- |
| S1021Z6-8 | 9-1- 73 |
| S1021Z6-8 | 9-4- 4 |
| S1021Z6-8 | 9-4- 13 |
| S1021Z6-8 | 10-1- |
| S1021Z6-8 | 10-1- 34 |
| S1021Z6-8 | 5-4- |
| S1021Z6-8 | 5-4- |
| S1021Z6-8 | 5-6- |
| S1021Z6-8 | 6-1- |
| S1021Z6-8 | 6-1- 54 |
| S1021Z6-8 | 6-2- |
| S1021Z6-8 | 6-3- |
| S1021Z6-8 | 6-4- |
| S1021Z6-8 | 6-5- |
| S1021Z6-8 | 6-5- 49 |
| S1021Z6-8 | 6-6- |
| S1021Z6-8 | 6-7- 65 |
| S1021Z6-8 | 6-8- 78 |
| S1021Z6-8 | 6-9- 56 |
| S1021Z6-8 | 6-10- 48 |

| PART NUMBER | FIGURE AND INDEX NO. |
|---|---|
| S1021Z6-8 | 6-11- 48 |
| S1021Z6-8 | 7-2- 49 |
| S1021Z6-8 | 7-3- 47 |
| S1021Z6-8 | 7-3- 51 |
| S1021Z6-8C | 9-3- 44 |
| S1021Z8-10 | 8-5- 2 |
| S1021Z8-10 | 8-5- 11 |
| S1021Z8-6 | 2-2- 5 |
| S1021Z8-6 | 8-2- 5 |
| S1021Z8-6 | 8-2- 12 |
| S1021Z8-6 | 8-2- 28 |
| S1021Z8-6 | 8-2- 35 |
| S1021Z8-6 | 9-3- 8 |
| S1021Z8-6 | 9-3- 34 |
| S1021Z8-6 | 9-3- 37 |
| S1021Z8-6 | 9-3- 40 |
| S1021Z8-6 | 3-6- |
| S1021Z8-6 | 3-7- |
| S1021Z8-6 | 5-1- |
| S1021Z8-6 | 5-2- 2 |
| S1021Z8-6 | 5-3- 10 |
| S1021Z8-6 | 6-8- 46 |
| S1021Z8-6 | 7-1- |
| S1021Z8-8 | 2-1- 24 |
| S1021Z8-8 | 2-2- 7 |
| S1021Z8-8 | 2-8- 5 |
| S1021Z8-8 | 2-14- 25 |
| S1021Z8-8 | 3-1- 47 |
| S1021Z8-8 | 3-3- |
| S1021Z8-8 | 3-3- |
| S1021Z8-8 | 3-3- |
| S1021Z8-8 | 7-4- 10 |
| S1021Z8-8 | 8-2- 19 |
| S1021Z8-8 | 9-1- |
| S1021Z8-8 | 9-1- |
| S1021Z8-8 | 9-1- |
| S1021Z8-8 | 10-1- 56 |
| S1021Z8-8 | 5-1- 50 |
| S1021Z8-8 | 5-8- 7 |
| S1021Z8-8 | 6-1- 20 |
| S1021Z8-8 | 6-3- 29 |
| S1021Z8-8 | 6-5- 21 |
| S1021Z8-8 | 6-7- 30 |
| S1021Z8-8 | 6-8- 38 |
| S1021Z8-8 | 6-8- |
| S1021Z8-8 | 6-8- 49 |
| S1021Z8-8 | 6-8- 60 |
| S1021Z8-8 | 6-9- 30 |
| S1021Z8-8 | 7-1- 8 |
| S1021Z8-8 | 7-1- 16 |
| S1021Z8-8 | 7-1- 20 |
| S1021Z8-8 | 7-1- 39 |
| S1021Z8-8 | 7-1- |
| S1021Z8-8 | 7-2- 11 |
| S1021Z8-8 | 7-3- 11 |
| S1022F8-8 | 2-13- 56 |
| S1022F8-8 | 2-14- 56 |
| S1022F8-8 | 2-15- 47 |
| S1022Z-6-6 | 3-3- |
| S1022Z6-6 | 2-1- |
| S1022Z6-6 | 2-2- |
| S1022Z6-6 | 2-2- |
| S1022Z6-6 | 2-10- |
| S1022Z6-6 | 2-11- |
| S1022Z6-6 | 2-12- |
| S1022Z6-6 | 3-3- |
| S1022Z6-6 | 3-3- |
| S1022Z6-6 | 6-9- |
| S1022Z6-6 | 6-10- |
| S1022Z6-6 | 6-11- |
| S1022Z6-8 | 7-6- 10 |
| S1022Z6-8 | 5-7- 30 |
| S1022Z6-8 | 6-8- |
| S1022Z6-8 | 6-12- |
| S1022Z6-8 | 7-1- |

| PART NUMBER | FIGURE AND INDEX NO. |
|---|---|
| S1022Z6-8 | 7-2- |
| S1022Z6-8 | 7-3- |
| S1022Z6-8 | 7-4- |
| S1022Z8-6 | 2-2- |
| S1022Z8-6 | 2-2- |
| S1022Z8-8 | 2-3- 49 |
| S1022Z8-8 | 2-3A- 34 |
| S1022Z8-8 | 2-3B- 38 |
| S1022Z8-8 | 2-3C- 35 |
| S1022Z8-8 | 2-8- 6 |
| S1022Z8-8 | 2-11- 6 |
| S1022Z8-8 | 2-11- 13 |
| S1022Z8-8 | 2-12- 4 |
| S1022Z8-8 | 2-12- 11 |
| S1022Z8-8 | 2-13- 61 |
| S1022Z8-8 | 2-14- 61 |
| S1022Z8-8 | 2-15- 51 |
| S1022Z8-8 | 7-4- |
| S1022Z8-8 | 7-2- |
| S1022Z8-8 | 7-3- |
| S1050-1-3.90 | 2-3A- 44 |
| S1050-1-3.90 | 2-3B- 48 |
| S1050-1-3.90 | 2-3C- 45 |
| S1050-1-3.90 | 2-13- 58 |
| S1050-1-3.90 | 2-14- 58 |
| S1053E7T | 10-1- 3 |
| S1053E7T | 10-1- 9 |
| S1053E7T | 10-1- 15 |
| S1053E7T | 10-1- 23 |
| S1053E7T | 10-1- 37 |
| S1053E7T | 10-1- 49 |
| S1053E7T | 10-1- 53 |
| S1071-1 | 2-18- 86 |
| S1090-10 | 5-2- |
| S1090-11 | 2-1- |
| S1090-11 | 2-3- |
| S1090-11 | 2-9- 6 |
| S1090-11 | 7-4- 60 |
| S1090-11 | 5-8- |
| S1090-11 | 6-1- 49 |
| S1090-11 | 6-3- 51 |
| S1090-11 | 6-5- 44 |
| S1090-11 | 7-2- 59 |
| S1090-11 | 7-3- 61 |
| S1090-12 | 2-12- 61 |
| S1090-12 | 4-1- |
| S1090-12 | 5-1- |
| S1090-12 | 5-2- |
| S1090-12 | 5-3- |
| S1090-13 | 2-2- |
| S1090-13 | 2-8- |
| S1090-13 | 2-11- 23 |
| S1090-13 | 3-1- |
| S1090-13 | 3-6- |
| S1090-18 | 9-1- |
| S1090-18 | 6-7- 58 |
| S1090-18 | 6-8- 71 |
| S1090-18 | 6-9- 49 |
| S1090-18 | 6-10- 41 |
| S1090-18 | 6-11- 41 |
| S1090-19 | 9-1- |
| S1090-19 | 6-7- 59 |
| S1090-19 | 6-8- 72 |
| S1090-19 | 6-9- 50 |
| S1090-19 | 6-10- 42 |
| S1090-19 | 6-11- 42 |
| S1090-2 | 2-1- 34 |
| S1090-2 | 7-4- 59 |
| S1090-2 | 5-8- 41 |
| S1090-2 | 6-1- 48 |
| S1090-2 | 6-3- 50 |
| S1090-2 | 6-5- 43 |
| S1090-2 | 7-2- 58 |
| S1090-2 | 7-3- 60 |
| S1090-2 | 4-1- 26 |
| S1090-3 | 5-1-39A |
| S1090-3 | 5-2- 19 |
| S1090-3 | 5-3- 54 |
| S1090-4 | 2-2- 43 |
| S1090-4 | 2-8- 29 |
| S1090-4 | 3-1- 37 |
| S1090-4 | 3-2- 39 |
| S1090-4 | 3-3- 8 |
| S1090-4 | 3-6- 42 |
| S1090-9 | 2-8- |
| S1090-9 | 3-6- |
| S1090-9 | 5-8- |
| S1091-10 | 2-12- 60 |
| S1091-10 | 4-1- |
| S1091-10 | 5-1- |
| S1091-10 | 5-3- |
| S1091-13 | 3-2- |
| S1091-13 | 3-3- |
| S1091-15 | 2-2- |
| S1091-15 | 2-8- 28 |
| S1091-15 | 2-11- 22 |
| S1091-15 | 3-1- |
| S1091-15 | 3-2- |
| S1091-15 | 3-3- |
| S1091-15 | 3-6- |
| S1091-2 | 9-1- |
| S1091-2 | 6-7- 60 |
| S1091-2 | 6-8- 73 |
| S1091-2 | 6-9- 51 |
| S1091-2 | 6-10- 43 |
| S1091-2 | 6-11- 43 |
| S1091-5 | 2-1- |
| S1091-5 | 2-3- |
| S1091-5 | 2-9- 5 |
| S1091-5 | 7-4- 61 |
| S1091-5 | 5-8- 42 |
| S1091-5 | 6-1- 50 |
| S1091-5 | 6-3- 52 |
| S1091-5 | 6-5- 45 |
| S1091-5 | 7-2- 60 |
| S1091-5 | 7-3- 62 |
| S1102-1 | 9-4- 7 |
| S1102-1 | 9-4- 15 |
| S1102-1 | 9-4- 20 |
| S1102-1 | 9-4- 29 |
| S1102-1 | 9-4- 36 |
| S1102-1 | 9-4- 54 |
| S1102-1 | 9-4- 59 |
| S1102-1 | 9-4- |
| S1102-1 | 9-4- 72 |
| S1102-1 | 9-4- 79 |
| S1103-1 | 1-1- 27 |
| S1103-1 | 1-2- |
| S1103-1 | 1-3- 40 |
| S1103-1 | 1-4- 36 |
| S1103-1 | 2-1- 44 |
| S1103-1 | 2-2- 40 |
| S1103-1 | 2-4- 52 |
| S1103-1 | 2-5- 68 |
| S1103-1 | 2-6- 62 |
| S1103-1 | 2-7- 62 |
| S1103-1 | 2-8- 20 |
| S1103-1 | 2-19- 39 |
| S1103-1 | 3-1- 26 |
| S1103-1 | 3-2- 28 |
| S1103-1 | 3-3- 7 |
| S1103-1 | 7-4- 68 |
| S1103-1 | 9-5- 3 |
| S1103-1 | 3-5- 24 |
| S1103-1 | 5-1- 29 |
| S1103-1 | 5-2- 4 |
| S1103-1 | 5-3- |
| S1103-1 | 5-4- 30 |
| S1103-1 | 5-8- 44 |
| S1103-1 | 5-9- 16 |
| S1103-1 | 6-1- 61 |
| S1103-1 | 6-2- 21 |
| S1103-1 | 6-3- 63 |
| S1103-1 | 6-4- 24 |
| S1103-1 | 6-5- 60 |
| S1103-1 | 6-6- 20 |
| S1103-1 | 7-1- 45 |
| S1103-1 | 7-2- 67 |
| S1103-1 | 7-3- 68 |
| S1130-1 | 2-18- 85 |
| S1131-1 | 2-18- |
| S1137-1 | 2-18- 84 |
| S1155-4 | 9-1- 68 |
| S1155-6 | 9-1- |
| S1155-8 | 9-1- |
| S1155-8 | 9-1- |
| S1163-1 | 9-1- 15 |
| S1163-1 | 9-1- 25 |
| S1163-1 | 9-1- 29 |
| S1163-1 | 9-1- 35 |
| S1163-2 | 1-1- 23 |
| S1163-2 | 1-2- 50 |
| S1163-2 | 1-3- 39 |
| S1163-2 | 1-4- 32 |
| S1163-2 | 2-1- 42 |
| S1163-2 | 2-2- 49 |
| S1163-2 | 2-4- 49 |
| S1163-2 | 2-5- 65 |
| S1163-2 | 2-6- 59 |
| S1163-2 | 2-7- 59 |
| S1163-2 | 2-8- 26 |
| S1163-2 | 2-11- 21 |
| S1163-2 | 2-12- 59 |
| S1163-2 | 2-15- |
| S1163-2 | 2-16- |
| S1163-2 | 2-17- |
| S1163-2 | 2-19- 36 |
| S1163-2 | 3-1- 36 |
| S1163-2 | 3-2- 38 |
| S1163-2 | 3-3- 17 |
| S1163-2 | 7-4- 66 |
| S1163-2 | 3-6- 60 |
| S1163-2 | 4-1- 25 |
| S1163-2 | 5-1- 33 |
| S1163-2 | 5-3- |
| S1163-2 | 5-4- 34 |
| S1163-2 | 5-6- 36 |
| S1163-2 | 5-8- 46 |
| S1163-2 | 6-1- 60 |
| S1163-2 | 6-2- 20 |
| S1163-2 | 6-3- 62 |
| S1163-2 | 6-4- 23 |
| S1163-2 | 6-5- 59 |
| S1163-2 | 6-6- 19 |
| S1163-2 | 6-9- 64 |
| S1163-2 | 6-10- 57 |
| S1163-2 | 6-11- 56 |
| S1163-2 | 7-2- 65 |
| S1163-2 | 7-3- |
| S1196-1 | 9-4- 8 |
| S1196-1 | 9-4- 21 |
| S1196-1 | 9-4- 30 |
| S1196-1 | 9-4- 37 |
| S1196-1 | 9-4- 55 |
| S1196-1 | 9-4- |
| S1196-2 | 9-4- 9 |
| S1196-2 | 9-4- 22 |
| S1196-2 | 9-4- 31 |
| S1196-2 | 9-4- 38 |
| S1196-2 | 9-4- 56 |
| S1196-2 | 9-4- 60 |
| S1196-2 | 9-4- 73 |
| S1216-2 | 2-9- 68 |
| S1216-2 | 9-1- 17 |
| S1216-2 | 9-1- 26 |

| PART NUMBER | FIGURE AND INDEX NO. |
|---|---|
| S1216-2 | 9-1- 37 |
| S1216-3 | 2-9- 53 |
| S1216-3 | 2-9- 69 |
| S1216-3 | 9-1- 57 |
| S1216-3 | 9-1- 59 |
| S1216-3 | 9-1- 61 |
| S1216-3 | 9-1- 87 |
| S1216-3 | 9-1- |
| S1216-3 | 9-1- 92 |
| S1216-4 | 2-9- 15 |
| S1216-4 | 2-9- 38 |
| S1216-4 | 2-9- 52 |
| S1216-4 | 2-13- 6 |
| S1216-4 | 9-1- |
| S1232-10 | 1-2- |
| S1232-10 | 1-4- 34 |
| S1232-10 | 2-3A- 51 |
| S1232-10 | 2-3B- 55 |
| S1232-10 | 2-3C- 52 |
| S1232-10 | 2-3D- 34 |
| S1232-10 | 3-1- 39 |
| S1232-10 | 3-3- 31 |
| S1232-10 | 5-1- 38 |
| S1232-10 | 5-1- 56 |
| S1232-10 | 5-3- 52 |
| S1232-10 | 5-3- |
| S1232-10 | 5-6- 33 |
| S1232-15 | 2-2- 44 |
| S1232-15 | 2-2- 81 |
| S1232-15 | 3-2- 41 |
| S1232-15 | 3-2- 63 |
| S1232-15 | 3-3- 10 |
| S1232-15 | 7-4- 64 |
| S1232-15 | 9-1- |
| S1232-15 | 5-4- 31 |
| S1232-15 | 5-4- 73 |
| S1232-15 | 6-1- 62 |
| S1232-15 | 6-2- 22 |
| S1232-15 | 6-3- 64 |
| S1232-15 | 6-4- 25 |
| S1232-15 | 6-5- 61 |
| S1232-15 | 6-6- 21 |
| S1232-15 | 7-2- 63 |
| S1232-15 | 7-3- 65 |
| S1232-5 | 2-1- 36 |
| S1232-5 | 9-1- |
| S1232-5 | 5-5- |
| S1232-5 | 5-7- 43 |
| S1238-1-1 | 7-4- |
| S1238-1-1 | 6-1- |
| S1238-1-1 | 6-3- |
| S1238-1-1 | 6-5- |
| S1238-1-1 | 6-7- |
| S1238-1-1 | 6-8- |
| S1238-1-1 | 6-9- |
| S1238-1-1 | 6-10- |
| S1238-1-1 | 6-11- |
| S1238-1-1 | 7-2- |
| S1238-1-1 | 7-3- |
| S1238-2-1 | 7-4- 57 |
| S1238-2-1 | 6-1- 46 |
| S1238-2-1 | 6-3- 48 |
| S1238-2-1 | 6-5- 41 |
| S1238-2-1 | 6-7- 56 |
| S1238-2-1 | 6-8- 69 |
| S1238-2-1 | 6-9- 47 |
| S1238-2-1 | 6-10- 39 |
| S1238-2-1 | 6-11- 39 |
| S1238-2-1 | 7-2- 56 |
| S1238-2-1 | 7-3- 58 |
| S1261-1 | 1-3- 43 |
| S1261-1 | 1-4- 37 |
| S1261-1 | 2-1- 46 |
| S1261-1 | 2-2- |
| S1261-1 | 3-1- 40 |

| PART NUMBER | FIGURE AND INDEX NO. |
|---|---|
| S1261-1 | 3-2- 42 |
| S1261-1 | 5-3- 55 |
| S1261-1 | 5-6- 32 |
| S1261-1 | 6-5- 62 |
| S1261-1 | 6-6- 22 |
| S1267-1-4 | 1-4- |
| S1267-1-4 | 2-7- |
| S1282-4 | 8-5- 6 |
| S1282-4 | 8-5- 15 |
| S1282-4 | 8-6- 7 |
| S1282-4 | 8-6- 16 |
| S1342-1 | 9-4- 1 |
| S1342-1 | 9-4- 10 |
| S1342-1 | 9-4- 17 |
| S1342-1 | 9-4- 23 |
| S1342-1 | 9-4- 32 |
| S1342-1 | 9-4- 46 |
| S1342-1 | 9-4- 57 |
| S1342-1 | 9-4- 61 |
| S1342-1 | 9-4- |
| S1342-1 | 9-4- 74 |
| S1342-5 | 9-4- |
| S1342-5 | 9-4- |
| S1342-5 | 9-4- |
| S1342-5 | 9-4- |
| S1342-5 | 9-4- |
| S1342-5 | 9-4- |
| S1342-5 | 9-4- |
| S1342-5 | 9-4- |
| S1342-5 | 9-4- 68 |
| S1342-5 | 9-4- |
| S1351T2 | 8-4- 8 |
| S1352-1 | 9-4- 39 |
| S1360-10 | 1-1- 25 |
| S1360-10 | 1-3- 35 |
| S1360-10 | 2-3A- |
| S1360-10 | 2-3B- |
| S1360-10 | 2-3C- |
| S1360-10 | 2-3D- |
| S1360-10 | 2-4- 50 |
| S1360-10 | 2-5- 66 |
| S1360-10 | 2-6- 60 |
| S1360-10 | 2-7- 60 |
| S1360-10 | 2-12- 62 |
| S1360-10 | 2-13- |
| S1360-10 | 2-14- |
| S1360-10 | 2-15- |
| S1360-10 | 2-16- |
| S1360-10 | 2-17- |
| S1360-10 | 2-19- 37 |
| S1360-10 | 3-7- 2 |
| S1360-10 | 5-6- |
| S1360-10 | 5-8- 40 |
| S1360-10 | 5-8- 66 |
| S1360-10 | 6-12- 22 |
| S1360-15 | 2-2-43A |
| S1360-15 | 2-2- 82 |
| S1360-15 | 2-8- 30 |
| S1360-15 | 2-8- 59 |
| S1360-15 | 2-11- 24 |
| S1360-15 | 3-1- 38 |
| S1360-15 | 3-2-41A |
| S1360-15 | 3-2- 64 |
| S1360-15 | 3-3-10A |
| S1360-15 | 3-3- |
| S1360-15 | 7-4- |
| S1360-15 | 3-6- 43 |
| S1360-15 | 6-1- |
| S1360-15 | 6-2- |
| S1360-15 | 6-3- |
| S1360-15 | 6-4- |
| S1360-15 | 6-5- |
| S1360-15 | 6-6- |
| S1360-15 | 6-7- 75 |
| S1360-15 | 6-8- 88 |

| PART NUMBER | FIGURE AND INDEX NO. |
|---|---|
| S1360-15 | 6-9- 65 |
| S1360-15 | 6-10- 58 |
| S1360-15 | 6-11- 57 |
| S1360-15 | 7-1- |
| S1360-15 | 7-2- |
| S1360-15 | 7-3- |
| S1360-2 | 2-9- 4 |
| S1360-2 | 2-10- 16 |
| S1360-2 | 3-4- 9 |
| S1360-2 | 9-1- |
| S1360-2 | 4-1- 29 |
| S1360-2 | 5-7- 45 |
| S1360-3 | 5-7- |
| S1360-5 | 1-1- 26 |
| S1360-5 | 1-2- |
| S1360-5 | 1-3- 37 |
| S1360-5 | 1-4- 35 |
| S1360-5 | 2-1- 37 |
| S1360-5 | 2-2- 41 |
| S1360-5 | 2-2- 80 |
| S1360-5 | 2-3E- 42 |
| S1360-5 | 2-4- 51 |
| S1360-5 | 2-5- 67 |
| S1360-5 | 2-6- 61 |
| S1360-5 | 2-7- 61 |
| S1360-5 | 2-8- |
| S1360-5 | 2-9- 3 |
| S1360-5 | 2-9- 45 |
| S1360-5 | 2-10- 15 |
| S1360-5 | 2-11- 25 |
| S1360-5 | 2-12- 63 |
| S1360-5 | 2-19- 38 |
| S1360-5 | 3-1- |
| S1360-5 | 3-3- 11 |
| S1360-5 | 3-3- |
| S1360-5 | 3-5- 12 |
| S1360-5 | 9-1- 12 |
| S1360-5 | 9-1- |
| S1360-5 | 3-5- 38 |
| S1360-5 | 3-7- 3 |
| S1360-5 | 4-1- 28 |
| S1360-5 | 5-2- |
| S1360-5 | 5-3- 51 |
| S1360-5 | 5-6- 34 |
| S1360-5 | 5-7- 44 |
| S1360-5 | 5-8- 43 |
| S1360-5 | 5-8- 67 |
| S1360-5 | 5-9- 12 |
| S1360-8 | 2-8- 31 |
| S1360-8 | 2-8- 60 |
| S1360-8 | 7-5- 30 |
| S1360-8 | 7-6- 22 |
| S1360-8 | 5-4- |
| S1367-1-10 | 2-2- |
| S1367-1-10 | 2-2- |
| S1367-1-10 | 3-3- |
| S1367-1-10 | 3-3- |
| S1367-1-10 | 5-2- |
| S1367-1-10 | 5-8- |
| S1367-1-10 | 6-8- |
| S1367-1-10 | 8-5- 8 |
| S1367-1-10 | 8-5- 17 |
| S1367-1-10 | 8-6- 3 |
| S1367-1-4 | 5-7- |
| S1367-1-6 | 7-4- |
| S1367-1-6 | 7-2- |
| S1367-1-6 | 7-3- |
| S1367-1-6 | 7-3- |
| S1367-1-8 | 1-2- |
| S1367-1-8 | 2-5- |
| S1367-1-8 | 2-9- |
| S1367-1-8 | 8-6- 12 |
| S1367-1-8 | 9-1- 84 |
| S1367-1-8 | 4-1- 34 |
| S1367-1-8 | 5-5- |

| PART NUMBER | FIGURE AND INDEX NO. |
|---|---|
| S1367-2-10 | 2-9- |
| S1367-2-8 | 1-2- |
| S1367-2-8 | 2-2- |
| S1367-2-8 | 2-2- |
| S1367-2-8 | 2-5- |
| S1367-2-8 | 3-3- |
| S1367-2-8 | 3-3- |
| S1367-2-8 | 5-2- |
| S1367-2-8 | 5-5- |
| S1367-2-8 | 5-8- |
| S1367-2-8 | 6-1- |
| S1367-2-8 | 6-5- |
| S1367-2-8 | 6-8- |
| S1367-2-8 | 6-12- 15 |
| S1370-0 | 7-4- 44 |
| S1370-0 | 7-2- 34 |
| S1370-1 | 7-3- 45 |
| S1390-3 | 2-1-40A |
| S1390-3 | 2-2-47A |
| S1390-3 | 2-4- 47 |
| S1390-3 | 2-5- 63 |
| S1390-3 | 2-6- 57 |
| S1390-3 | 2-7- 57 |
| S1390-3 | 2-8- 23 |
| S1390-3 | 2-11- 19 |
| S1390-3 | 2-12- 57 |
| S1390-3 | 2-19- 34 |
| S1390-3 | 3-6- 58 |
| S1390-3 | 4-1- 22 |
| S1390-3 | 6-7- 74 |
| S1390-3 | 6-8- 87 |
| S1450-2A14-032 | 2-3- 19 |
| S1450-2A14-032 | 2-3A- 19 |
| S1450-2A14-032 | 2-3C- 20 |
| S1450-2A14-032 | 2-3B- 23 |
| S1450-2A14-032 | 2-3D- 20 |
| S1450-2A14-032 | 2-3E- 15 |
| S1456-100 | 9-1- |
| S1456-100 | 9-1- |
| S1456-100 | 9-1- |
| S1456-100 | 9-1- |
| S1458-4-24A | 6-8- 47 |
| S1477-08 | 2-3E- 23 |
| S1485-4U | 6-8- 39 |
| S1485-4U | 6-8- 59 |
| S1485D4U | 6-7- 29 |
| S1488-1 | 10-5- 12 |
| S1495-4 | 2-13- 76 |
| S1495-4 | 2-13- 78 |
| S1495-4 | 2-14- 77 |
| S1495-4 | 2-14- 87 |
| S1495-4 | 2-16- 47 |
| S1495-4 | 2-17- 47 |
| S1495-6 | 2-3A- 59 |
| S1495-6 | 2-3B- 63 |
| S1495-6 | 2-3C- 60 |
| S1495-6 | 2-13- 80 |
| S1495-6 | 2-13- 81 |
| S1495-6 | 2-13- 83 |
| S1495-6 | 2-14- 75 |
| S1495-6 | 2-14- 79 |
| S1495-6 | 2-14- 85 |
| S1495-6 | 2-15- 66 |
| S1495-6 | 2-15- 72 |
| S1495-6 | 2-15- 74 |
| S1495-6 | 2-15- 76 |
| S1495-6 | 2-15- 78 |
| S1495-6 | 2-16- 39 |
| S1495-6 | 2-16- 41 |
| S1495-6 | 2-17- 39 |
| S1495-6 | 2-17- 41 |
| S1497-4 | 2-13- 75 |
| S1497-4 | 2-14- 78 |
| S1497-4 | 2-14- 88 |
| S1497-4 | 2-16- 48 |

| PART NUMBER | FIGURE AND INDEX NO. |
|---|---|
| S1497-4 | 2-17- 48 |
| S1497-6 | 2-3A- 61 |
| S1497-6 | 2-3B- 65 |
| S1497-6 | 2-3C- 62 |
| S1497-6 | 2-3D- 44 |
| S1497-6 | 2-13- 77 |
| S1497-6 | 2-14- 76 |
| S1497-6 | 2-14- 80 |
| S1497-6 | 2-14- 83 |
| S1497-6 | 2-14- 86 |
| S1497-6 | 2-15- 67 |
| S1497-6 | 2-15- 71 |
| S1497-6 | 2-15- 73 |
| S1497-6 | 2-15- 75 |
| S1497-6 | 2-15- 77 |
| S1497-6 | 2-15- 79 |
| S1497-6 | 2-16- 40 |
| S1497-6 | 2-16- 42 |
| S1497-6 | 2-16- 44 |
| S1497-6 | 2-16- 46 |
| S1497-6 | 2-17- 40 |
| S1497-6 | 2-17- 42 |
| S1497-6 | 2-17- 44 |
| S1497-6 | 2-17- 46 |
| S1499-4JJ-32.00 | 2-16- |
| S1499-4JJ-32.00 | 2-17- |
| S1499-6LL-11.00 | 2-16- |
| S1499-6LL-11.00 | 2-17- |
| S1499-6LL-19.25 | 2-16- |
| S1499-6LL-19.25 | 2-17- |
| S1521-1 | 2-13- 74 |
| S1521-1 | 2-14- 74 |
| S1521-1 | 2-15- 65 |
| S1521-1 | 2-16- 36 |
| S1521-1 | 2-17- 36 |
| S1575-1 | 2-3- 18 |
| S1575-1 | 2-3A- 18 |
| S1575-1 | 2-3B- 22 |
| S1575-1 | 2-3C- 19 |
| S1575-1 | 2-3D- 19 |
| S1575-1 | 2-3E- 14 |
| S1615-6 | 2-14- 82 |
| S1615-6 | 2-15- 70 |
| S1615-6 | 2-16- 43 |
| S1615-6 | 2-16- 45 |
| S1615-6 | 2-17- 43 |
| S1615-6 | 2-17- 45 |
| S1616-6LL-10.00 | 2-16- |
| S1616-6LL-10.00 | 2-17- |
| S1616-6LL-11.00 | 2-16- |
| S1616-6LL-11.00 | 2-17- |
| S1629-1 | 10-5- 10 |
| S1648-08-75 | 3-6- 8 |
| S20364-832C | 6-6- 9 |
| S225-4F | 2-3- 48 |
| S225-4F | 2-3A- 33 |
| S225-4F | 2-3B- 37 |
| S225-4F | 2-3C- 34 |
| S225-4F | 2-13- 55 |
| S225-4F | 2-13- 60 |
| S225-4F | 2-14- 55 |
| S225-4F | 2-14- 60 |
| S225-4F | 2-15- 46 |
| S225-4F | 2-15- 50 |
| S226-5F | 2-3- 47 |
| S226-5F | 2-3A- 32 |
| S226-5F | 2-3B- 36 |
| S226-5F | 2-3C- 33 |
| S226-5F | 2-13- 54 |
| S226-5F | 2-13- 59 |
| S226-5F | 2-14- 54 |
| S226-5F | 2-14- 59 |
| S226-5F | 2-15- 45 |
| S226-5F | 2-15- 49 |
| S308CCT-K | 3-3- |

| PART NUMBER | FIGURE AND INDEX NO. |
|---|---|
| S308CCT-K | 3-3- |
| S308CCT-L | 3-3- |
| S308CCT-L | 3-3- |
| S312CCT-K | 3-3- |
| S312CCT-K | 3-3- |
| S338-1 | 2-18- 64 |
| S339-1 | 2-18- 65 |
| S350 | 8-1- 5 |
| S350 | 8-3- 5 |
| S350 | 9-3- 5 |
| S350 | 9-3- 12 |
| S350 | 4-1- 6 |
| S355 | 2-2- 23 |
| S355 | 2-2- 27 |
| S355 | 2-4- 35 |
| S355 | 2-4- 39 |
| S355 | 2-5- 44 |
| S355 | 2-6- 31 |
| S355 | 2-6- 35 |
| S355 | 2-7- 46 |
| S355 | 2-12- 38 |
| S355 | 2-12- 42 |
| S355 | 2-14- 34 |
| S355 | 2-19- 20 |
| S355 | 2-19- 24 |
| S355 | 3-1- 20 |
| S355 | 3-2- 20 |
| S355 | 3-2- |
| S355 | 3-6- 20 |
| S355 | 3-6- 23 |
| S355 | 6-8- 7 |
| S355 | 6-8- 11 |
| S355 | 6-8- 63 |
| S355 | 6-9- 8 |
| S355 | 7-1- |
| S355-1 | 2-13- 12 |
| S355-1 | 6-8- 43 |
| S355-1 | 7-1- 13 |
| S355-2 | 2-3A- 12 |
| S355-2 | 2-3B- 16 |
| S355-2 | 2-3C- 13 |
| S355-2 | 2-3D- 13 |
| S355-2 | 5-1- 6 |
| S355-2 | 5-1- 19 |
| S355-2 | 5-1- |
| S355-2 | 5-1- |
| S355-2 | 5-1- |
| S355-2 | 5-3- 6 |
| S355-2 | 5-3- 20 |
| S355-2 | 5-3- |
| S355-2 | 6-10- 4 |
| S378-1 | 2-3E- 30 |
| S378-3L | 2-3- 42 |
| S378-3L | 2-3A- 28 |
| S378-3L | 2-3B- 32 |
| S378-3L | 2-3C- 29 |
| S378-3L | 2-13- 48 |
| S378-3L | 2-14- 48 |
| S378-3L | 2-15- 39 |
| S378-4 | 2-13- 28 |
| S382-1 | 2-9- 14 |
| S382-1 | 2-9- 36 |
| S382-3 | 9-1- 16 |
| S392-1 | 2-9- 13 |
| S392-1 | 2-9- 37 |
| S392-3 | 2-3A- 63 |
| S392-3 | 2-3B- 67 |
| S392-3 | 2-13- 5 |
| S392-3 | 2-14- 4 |
| S394 | 2-18- 69 |
| T-10-R | 7-5- 2 |
| T-10-R | 7-6- 1 |
| T-5-DA | 7-1- 1 |
| T-5-DA | 7-2- 1 |
| T-5-DA | 7-3- 1 |

| PART NUMBER | FIGURE AND INDEX NO. |
|---|---|
| T-5-DA | 7-4- 1 |
| T-5-RA | 7-5- 1 |
| TENA9-10-1 | 3-3- |
| TENA9-10-1 | 3-3- |
| TVA1315 | 10-5- 6 |
| T12MP-12 | 5-8- 10 |
| T12MP-12 | 5-8- 51 |
| T12MP-7 | 5-3- 11 |
| T12MP-7 | 5-3- 64 |
| T12MP-8 | 5-4- 2 |
| T12MP-8 | 5-4- 59 |
| T12RP-9 | 5-6- 2 |
| T24MP-12 | 5-8- 11 |
| T24MP-12 | 5-8- 52 |
| T24MP-8 | 5-3- |
| T24MP-8 | 5-4- 3 |
| T24MP-8 | 5-9- 3 |
| T24RP-9 | 5-6- |
| UDI-2 | 5-6- 1 |
| UG-1050/U | 2-2- |
| UG-1050/U | 2-2- |
| UG-1050/U | 2-2- |
| UG-1050/U | |
| UG-1050/U | 2-8- |
| UG-1050/U | 2-8- |
| UG-1051/U | 2-2- |
| UG-1051/U | 2-2- |
| UG-1051/U | 2-2- |
| UG-1051/U | 2-8- |
| UG-1051/U | 2-8- |
| UG-175/U | 7-4- |
| UG-175/U | 7-4- |
| UG-175/U | 7-5- |
| UG-175/U | 6-1- |
| UG-175/U | 6-1- |
| UG-175/U | 6-2- |
| UG-175/U | 6-3- |
| UG-175/U | 6-4- |
| UG-175/U | 6-5- |
| UG-175/U | 6-6- |
| UG-175/U | 6-7- 79 |
| UG-175/U | 6-7- |
| UG-175/U | 6-8- 95 |
| UG-175/U | 6-9- 69 |
| UG-175/U | 6-9- |
| UG-175/U | 6-10- 62 |
| UG-175/U | 6-10- |
| UG-175/U | 6-11- 61 |
| UG-175/U | 6-11- |
| UG-175/U | 6-12- |
| UG-175/U | 7-1- |
| UG-175/U | 7-1- |
| UG-175/U | 7-2- |
| UG-175/U | 7-2- |
| UG-175/U | 7-3- |
| UG-175/U | 7-3- |
| UG-175U | 6-8- |
| UG-260/U | 3-3- 36 |
| UG-274/U | 2-2- 77 |
| UG-274/U | 2-8- 55 |
| UG-274/U | 2-12- 78 |
| UG-274/U | 3-2- 50 |
| UG-274/U | 3-3- 39 |
| UG-274/U | 3-5- 43 |
| UG-274/U | 3-6- 55 |
| UG-274/U | 5-1- 65 |
| UG-274/U | 5-3- 70 |
| UG-274/U | 5-4- 57 |
| UG-274/U | 5-8- 56 |
| UG-290/U | 8-6- |
| UG-291/U | 2-2- |
| UG-291/U | 2-8- |
| UG-291/U | 2-8- |
| UG-291/U | 3-3- |
| UG-291/U | 8-2- 38 |

| PART NUMBER | FIGURE AND INDEX NO. |
|---|---|
| UG-291/U | 3-6- |
| UG-291/U | 3-6- |
| UG-291/U | 5-1- |
| UG-291/U | 5-2- |
| UG-291/U | 5-3- |
| UG-291/U | 5-8- |
| UG-291/U | 6-8- |
| UG-291/U | 7-1- |
| UG-491A/U | 6-8- |
| UG-657/U | 8-6- 14 |
| UG-88C/U | 1-1- |
| UG-88C/U | 1-2- |
| UG-88C/U | 1-2- |
| UG-88C/U | 1-2- |
| UG-88C/U | 1-2- |
| UG-88C/U | 1-2- |
| UG-88C/U | 1-2- |
| UG-88C/U | 1-2- |
| UG-88C/U | 1-2- |
| UG-88C/U | 1-4- |
| UG-88C/U | 1-4- |
| UG-88C/U | 1-4- |
| UG-88C/U | 1-4- |
| UG-88C/U | 1-4- |
| UG-88C/U | 1-4- |
| UG-88C/U | 2-2- |
| UG-88C/U | 2-2- |
| UG-88C/U | 2-2- |
| UG-88C/U | 2-2- |
| UG-88C/U | 2-2- |
| UG-88C/U | 2-2- |
| UG-88C/U | 2-2- 61 |
| UG-88C/U | 2-2- 63 |
| UG-88C/U | 2-2- |
| UG-88C/U | 2-2- |
| UG-88C/U | 2-2- |
| UG-88C/U | 2-4- |
| UG-88C/U | 2-5- |
| UG-88C/U | 2-5- |
| UG-88C/U | 2-5- |
| UG-88C/U | 2-5- |
| UG-88C/U | 2-5- |
| UG-88C/U | 2-5- |
| UG-88C/U | 2-5- |
| UG-88C/U | 2-7- |
| UG-88C/U | 2-7- |
| UG-88C/U | 2-7- |
| UG-88C/U | 2-7- |
| UG-88C/U | 2-7- |
| UG-88C/U | 2-8- |
| UG-88C/U | 2-8- |
| UG-88C/U | 2-8- |
| UG-88C/U | 2-8- |
| UG-88C/U | 2-8- |
| UG-88C/U | 2-8- |
| UG-88C/U | 2-8- |
| UG-88C/U | 2-8- 54 |
| UG-88C/U | 2-8- |
| UG-88C/U | 2-12- |
| UG-88C/U | 2-12- |
| UG-88C/U | 2-12- |
| UG-88C/U | 2-12- 79 |
| UG-88C/U | 3-1- |
| UG-88C/U | 3-1- |
| UG-88C/U | 3-2- |
| UG-88C/U | 3-2- 53 |
| UG-88C/U | 3-2- |
| UG-88C/U | 3-3- |
| UG-88C/U | 3-3- |
| UG-88C/U | 3-3- |
| UG-88C/U | 3-3- |
| UG-88C/U | 3-3- |
| UG-88C/U | 3-3- |
| UG-88C/U | 3-5- |
| UG-88C/U | 7-4- |
| UG-88C/U | 7-4- |

| PART NUMBER | FIGURE AND INDEX NO. |
|---|---|
| UG-88C/U | 8-2- 7 |
| UG-88C/U | 8-2- 14 |
| UG-88C/U | 9-1- |
| UG-88C/U | 9-1- |
| UG-88C/U | 3-5- |
| UG-88C/U | 3-5- |
| UG-88C/U | 3-5- |
| UG-88C/U | 3-5- 42 |
| UG-88C/U | 3-5- |
| UG-88C/U | 3-6- |
| UG-88C/U | 3-6- |
| UG-88C/U | 3-6- |
| UG-88C/U | 3-6- |
| UG-88C/U | 3-6- 51 |
| UG-88C/U | 3-6- |
| UG-88C/U | 5-1- |
| UG-88C/U | 5-1- 59 |
| UG-88C/U | 5-1- 62 |
| UG-88C/U | 5-2- |
| UG-88C/U | 5-3- |
| UG-88C/U | 5-3- |
| UG-88C/U | 5-3- |
| UG-88C/U | 5-3- |
| UG-88C/U | 5-3- |
| UG-88C/U | 5-3- |
| UG-88C/U | 5-3- |
| UG-88C/U | 5-3- 69 |
| UG-88C/U | 5-4- |
| UG-88C/U | 5-4- |
| UG-88C/U | 5-4- |
| UG-88C/U | 5-4- |
| UG-88C/U | 5-4- |
| UG-88C/U | 5-4- 52 |
| UG-88C/U | 5-4- |
| UG-88C/U | 5-5- |
| UG-88C/U | 5-6- |
| UG-88C/U | 5-6- |
| UG-88C/U | 5-7- |
| UG-88C/U | 5-8- |
| UG-88C/U | 5-8- |
| UG-88C/U | 5-8- |
| UG-88C/U | 5-8- |
| UG-88C/U | 5-8- |
| UG-88C/U | 5-8- |
| UG-88C/U | 5-8- 58 |
| UG-88C/U | 5-8- 60 |
| UG-88C/U | 5-8- |
| UG-88C/U | 5-9- |
| UG-88C/U | 6-1- |
| UG-88C/U | 6-2- |
| UG-88C/U | 6-3- |
| UG-88C/U | 6-4- |
| UG-88C/U | 6-5- |
| UG-88C/U | 6-6- |
| UG-88C/U | 6-7- |
| UG-88C/U | 6-8- 94 |
| UG-88C/U | 6-8- |
| UG-88C/U | 6-9- |
| UG-88C/U | 6-10- |
| UG-88C/U | 6-11- |
| UG-88C/U | 6-12- |
| UG-88C/U | 7-1- |
| UG-88C/U | 7-2- |
| UG-88C/U | 7-2- |
| UG-88C/U | 7-3- |
| UG-88C/U | 7-3- |
| UG-89-U | 2-8- 49 |
| UG-89/U | 1-2- |
| UG-89/U | 1-2- |
| UG-89/U | 1-4- |
| UG-89/U | 1-4- |
| UG-89/U | 2-2- |
| UG-89/U | 2-2- |
| UG-89/U | 2-2- |
| UG-89/U | 2-5- |
| UG-89/U | 2-5- |
| UG-89/U | 2-7- |

| PART NUMBER | FIGURE AND INDEX NO. |
|---|---|
| UG-89/U | 2-7- |
| UG-89/U | 2-8- |
| UG-89/U | 2-8- |
| UG-89/U | 2-8- 52 |
| UG-89/U | 2-12- |
| UG-89/U | 2-12- |
| UG-89/U | 2-12- 80 |
| UG-89/U | 3-2- 55 |
| UG-89/U | 3-3- |
| UG-89/U | 3-3- |
| UG-89/U | 3-3- 38 |
| UG-89/U | 3-3- |
| UG-89/U | 7-4- |
| UG-89/U | 7-4- |
| UG-89/U | 8-2- 30 |
| UG-89/U | 3-5- |
| UG-89/U | 3-5- |
| UG-89/U | 3-5- 47 |
| UG-89/U | 3-6- |
| UG-89/U | 3-6- |
| UG-89/U | 3-6- 54 |
| UG-89/U | 5-1- 61 |
| UG-89/U | 5-3- |
| UG-89/U | 5-3- |
| UG-89/U | 5-3- 67 |
| UG-89/U | 5-4- |
| UG-89/U | 5-4- |
| UG-89/U | 5-4- 54 |
| UG-89/U | 5-8- |
| UG-89/U | 5-8- |
| UG-89/U | 5-8- |
| UG-89/U | 6-1- |
| UG-89/U | 6-2- |
| UG-89/U | 6-3- |
| UG-89/U | 6-4- |
| UG-89/U | 6-5- |
| UG-89/U | 6-6- |
| UG-89/U | 6-7- |
| UG-89/U | 6-7- |
| UG-89/U | 6-7- |
| UG-89/U | 6-8- |
| UG-89/U | 6-8- |
| UG-89/U | 6-9- |
| UG-89/U | 6-9- |
| UG-89/U | 6-9- |
| UG-89/U | 6-10- |
| UG-89/U | 6-10- |
| UG-89/U | 6-10- |
| UG-89/U | 6-11- |
| UG-89/U | 6-11- |
| UG-89/U | 6-11- |
| UG-89/U | 7-2- |
| UG-89/U | 7-2- |
| UG-89/U | 7-3- |
| UG-89/U | 7-3- |
| UG-913/U | 1-1- |
| UG-913/U | 1-2- |
| UG-913/U | 1-4- |
| UG-913/U | 2-4- |
| UG-913/U | 2-5- |
| UG-913/U | 2-7- |
| UG-913/U | 2-8- |
| UG-913/U | 2-8- |
| UG-913/U | 2-11- 80 |
| UG-913/U | 3-1- |
| UG-913/U | 3-1- |
| UG-913/U | 3-2- |
| UG-913/U | 3-2- |
| UG-913/U | 5-1- |
| UG-913/U | 5-4- |
| UG-913/U | 5-4- |
| UG-913/U | 5-8- |
| UG-913/U | 5-8- |
| UGR-1A | 5-7- 1 |
| UGS-1 | 5-7- 28 |

| PART NUMBER | FIGURE AND INDEX NO. |
|---|---|
| UGS-1A | 5-7- 29 |
| UG291/U | 8-2- 21 |
| UG88C/U | 2-9- |
| UG88C/U | 8-2- 37 |
| VCM-20 | 6-1- |
| VCM-20 | 6-2- |
| VCM-20 | 6-4- |
| VCM-20 | 6-5- |
| VCM-20 | 6-6- |
| VM-800-2 | 7-4- 62 |
| VM-800-2 | 6-1- 51 |
| VM-800-2 | 6-3- 53 |
| VM-800-2 | 6-5- 46 |
| VM-800-2 | 6-8- 74 |
| VM-800-2 | 7-2- 61 |
| VM-800-2 | 7-3- 63 |
| VM-800-4 | 6-7- 61 |
| VM-800-4 | 6-9- 52 |
| VM-800-4 | 6-10- 44 |
| VM-911M-1A | 3-4- 4 |
| VM-911M-10A | 3-4- 5 |
| VM-911M-4A | 3-4- 6 |
| VM-911M-4A | 6-1- 52 |
| VM-911M-4A | 6-3- 54 |
| VM-911M-4A | 6-5- 47 |
| VM-911M-4A | 6-7- 63 |
| VM-911M-4A | 6-8- 76 |
| VM-911M-4A | 6-9- 54 |
| VM-911M-4A | 6-10- 46 |
| VM-911M-4A | 6-11- 46 |
| VM-911M-4A | 7-3- 64 |
| VM-911M-4A | 7-4- 63 |
| VM-911M-8P5 | 7-2- 62 |
| VM800-4 | 6-11- 44 |
| VOA-4 | 5-3- 38 |
| VOA-4 | 5-3- 65 |
| VOA-4 | 5-4- 48 |
| VOA-4 | 5-4- 70 |
| VOA-4 | 5-8- 27 |
| VOA-4 | 5-8- 53 |
| VOA-5 | 5-3- |
| VOA-5 | 5-3- |
| VOA-5 | 5-4- 49 |
| VOA-5 | 5-4- 71 |
| VOA-5 | 5-7- 38 |
| VOA-5 | 5-8- 29 |
| VOA-6 | 5-8- 28 |
| VOA-6 | 5-8- 54 |
| VSM-20 | 6-3- |
| VTR-2A | 5-1- 27 |
| VTR-2A | 5-1- 55 |
| VTR-2AH | 5-1- |
| VTR-2AH | 5-1- |
| V12MP-2A | 5-1- 1 |
| V12MP-2A | 5-1- 51 |
| W-106A | 8-6- 13 |
| WK-4-21C-5/16 | 4-1- 13 |
| W106A | 8-4- 6 |
| W106A | 8-5- 5 |
| W106A | 8-5- 14 |
| W106A | 8-6- 4 |
| X-100 | 8-1- 8 |
| X-88 | 8-1- 6 |
| XMRE265-G-1B017 | 2-2- |
| XMRE265-G-1B017 | 2-2- |
| X12870 | 5-4- 35 |
| X12870 | 5-6- 37 |
| X12871 | 5-3- 61 |
| X12871 | 5-4- |
| X12871 | 5-6- 38 |
| 111-351 | 5-1- 32 |
| 111-351 | 5-4- 33 |
| 24-0001-00 | 3-7- 8 |
| 30-0005-00 | 3-6- |
| 30-0008-00 | 3-5- |

| PART NUMBER | FIGURE AND INDEX NO. |
|---|---|
| 30-0008-00 | 3-5- |
| 30-0021-01 | 3-7- |
| 30-0024-00 | 3-7- 9 |
| 30-0028-00 | 3-6- |
| 30-0028-00 | 3-6- |
| 30-0028-00 | 3-6- |
| 30-1008-00 | 3-1- |
| 30-1009-00 | 3-1- |
| 30-1010-00 | 3-1- |
| 30-2000-00 | 3-1- |
| 30-2000-00 | 3-1- |
| 30-2000-00 | 3-2- |
| 30-2000-00 | 3-2- |
| 30-2000-00 | 3-5- |
| 30-2000-00 | 3-5- |
| 30-2000-00 | 3-6- |
| 30-2000-00 | 3-6- |
| 30-2002-00 | 3-1- |
| 30-2002-00 | 3-1- |
| 30-2002-00 | 3-2- |
| 30-2002-00 | 3-2- |
| 30-2002-00 | 3-5- |
| 30-2002-00 | 3-5- |
| 30-2002-00 | 3-6- |
| 30-2013-00 | 3-5- |
| 30-2013-00 | 3-5- |
| 30-2017-00 | 3-5- |
| 30-2017-00 | 3-5- |
| 30-2036-00 | 3-4- |
| 30-2038-00 | 3-2- |
| 30-2038-00 | 3-2- |
| 30-2038-00 | 3-5- |
| 30-2038-00 | 3-5- |
| 30-2043-00 | 3-7- |
| 30-2044-00 | 3-6- |
| 30000300 | 3-5- |
| 400123-1 | 3-3- 21 |
| 410112-36 | 5-1- 12 |
| 410112-37 | 5-1- 13 |
| 411057-3 | 9-4- 2 |
| 411057-3 | 9-4- 11 |
| 411057-3 | 9-4- 18 |
| 411057-3 | 9-4- 24 |
| 411057-3 | 9-4- 33 |
| 411057-3 | 9-4- 47 |
| 411057-3 | 9-4- 58 |
| 411057-3 | 9-4- 62 |
| 411057-3 | 9-4- 69 |
| 411057-3 | 9-4- 75 |
| 411059-1 | 2-2- 71 |
| 411059-1 | 2-3A- 11 |
| 411059-1 | 2-3B- 15 |
| 411059-1 | 2-3C- 12 |
| 411059-1 | 2-3D- 12 |
| 411059-1 | 2-4- 58 |
| 411059-1 | 2-5- 81 |
| 411059-3 | 5-3- 31 |
| 411059-3 | 5-3- |
| 411059-3 | 5-8- 17 |
| 411059-3 | 5-8- |
| 411059-4 | 2-3- 13 |
| 411062-4 | 9-3- 15 |
| 411067-1 | 8-4- 4 |
| 411547-1 | 2-12- 30 |
| 411547-1 | 3-6- 15 |
| 411547-2 | 2-12- 33 |
| 411547-2 | 3-6- 12 |
| 411686 | 8-5- 7 |
| 411686 | 8-5- 16 |
| 411686 | 8-6- 6 |
| 411686 | 8-6- 15 |
| 411783 | 2-18- 70 |
| 411968-1 | 9-4- 3 |
| 412011-1 | 2-12- 29 |
| 412011-1 | 3-6- 11 |

| PART NUMBER | FIGURE AND INDEX NO. |
|---|---|
| 412012-1 | 3-6- 10 |
| 412063-1 | 2-1-12A |
| 412063-2 | 2-1- |
| 412063-3 | 2-1- |
| 413126-3 | 2-1- 40 |
| 413126-3 | 2-2- 47 |
| 413126-3 | 2-8- |
| 413126-3 | 2-8- 24 |
| 413126-3 | 3-1- 34 |
| 413126-3 | 3-2- 36 |
| 413126-3 | 3-3- 15 |
| 413126-3 | 5-1- 35 |
| 413126-3 | 5-2- 16 |
| 413126-3 | 5-3- |
| 413126-3 | 5-8- 49 |
| 413126-4 | 7-1- 55 |
| 413126-5 | 2-1- 39 |
| 413126-5 | 2-2- 46 |
| 413126-5 | 2-4- 46 |
| 413126-5 | 2-5- 62 |
| 413126-5 | 2-6- 56 |
| 413126-5 | 2-7- 56 |
| 413126-5 | 2-8- 22 |
| 413126-5 | 2-11- 18 |
| 413126-5 | 2-12- 56 |
| 413126-5 | 2-19- 33 |
| 413126-5 | 3-1- 31 |
| 413126-5 | 3-2- 34 |
| 413126-5 | 3-3- 12 |
| 413126-5 | 3-6- 57 |
| 413126-5 | 4-1- 23 |
| 413126-5 | 5-1- 34 |
| 413126-5 | 5-2- 15 |
| 413126-5 | 5-3- 58 |
| 413126-5 | 6-7- 73 |
| 413126-5 | 6-8- 86 |
| 413126-6 | 2-8- |
| 413126-6 | 3-1- 33 |
| 413126-6 | 3-3- 14 |
| 413126-6 | 5-8- 47 |
| 413126-7 | 2-8- 21 |
| 413126-7 | 5-2- 21 |
| 413126-9 | 2-1- 38 |
| 413126-9 | 2-2- 45 |
| 413126-9 | 3-1- 32 |
| 413126-9 | 3-2- 35 |
| 413126-9 | 3-3- 13 |
| 413126-9 | 4-1- 21 |
| 413126-9 | 5-1- 36 |
| 413126-9 | 5-2- 17 |
| 413126-9 | 5-3- 59 |
| 413126-9 | 5-8- 48 |
| 413403-1 | 2-8- 4 |
| 413403-1 | 2-11- 3 |
| 413403-1 | 2-12- |
| 413403-3 | 2-11- 4 |
| 413403-3 | 2-12- 2 |
| 413403-4 | 2-11- |
| 413403-4 | 2-12- |
| 413418 | 9-4- 76 |
| 431016-1 | 8-2- 34 |
| 441021 | 7-4- 24 |
| 441021 | 6-1- 27 |
| 441021 | 6-3- 32 |
| 441021 | 6-5- 24 |
| 441021 | 6-7- 47 |
| 441021 | 6-8- 56 |
| 441021 | 6-9- 38 |
| 441021 | 6-10- 32 |
| 441021 | 6-11- 31 |
| 441021 | 7-1- 27 |
| 441021 | 7-2- 25 |
| 441021 | 7-3- 25 |
| 47-1010-00 | 3-1- 9 |
| 47-1010-00 | 3-2- 9 |

| PART NUMBER | FIGURE AND INDEX NO. |
|---|---|
| 47-1010-00 | 3-2- |
| 47-1010-00 | 3-5- 4 |
| 47-1010-00 | 3-5- 31 |
| 470011-1 | 9-3- 7 |
| 470014-1 | 9-1- 78 |
| 470400-222 | 2-9- 7 |
| 470412-1 | 2-9- 8 |
| 470412-1 | 2-9- 31 |
| 470413-1 | 2-9- 32 |
| 470413-2 | 2-9- 9 |
| 500118-37 | 2-13- 82 |
| 510105-218 | 2-13- 26 |
| 510105-219 | 2-13- 27 |
| 511030-2 | 5-4- 12 |
| 511030-2 | 5-4- 68 |
| 511030-3 | 5-4- 13 |
| 511030-3 | 5-4- 69 |
| 511030-7 | 2-2- 25 |
| 511030-7 | 3-1- 18 |
| 511030-7 | 3-2- 18 |
| 511030-7 | 3-2- |
| 511030-7 | 5-1- 16 |
| 511030-7 | 5-1- |
| 511030-7 | 5-3- 18 |
| 511104-19 | 8-5- 1 |
| 511104-19 | 8-5- 10 |
| 511255-1 | 2-3A- 17 |
| 513153-10 | 2-3- 8A |
| 513153-10 | 2-3B- 8A |
| 513318-1 | 9-4- 41 |
| 513354-1 | 2-13- 32 |
| 513355-1 | 2-13- 9 |
| 533133-1 | 2-13- 15 |
| 533133-1 | 2-13- 22 |
| 533133-2 | 2-13- 14 |
| 533133-2 | 2-13- 21 |
| 560007-1 | 2-13- 20 |
| 560007-4 | 2-13- 13 |
| 570004-1 | 3-1- 46 |
| 570004-1 | 3-3- |
| 570004-1 | 5-3- 8 |
| 570004-1 | 5-8- 6 |
| 570004-2 | 3-3- |
| 570010-2 | 9-1- 6 |
| 570012-1 | 8-2- 4 |
| 570013-1 | 8-2- 13 |
| 570013-3 | 8-2- 6 |
| 570013-3 | 8-2- 36 |
| 570024-2 | 2-9- 20 |
| 570024-3 | 2-9- 21 |
| 570026-1 | 8-2- 11 |
| 570026-1 | 8-2- 18 |
| 570030-1 | 9-4- 48 |
| 570033-1 | 10-1- 5 |
| 570033-1 | 10-1- 11 |
| 570035-1 | 6-7- 31 |
| 570035-2 | 6-7- 32 |
| 570035-3 | 6-7- 24 |
| 570038-1 | 6-7- |
| 570038-2 | 6-7- 27 |
| 570038-3 | 6-7- 28 |
| 570400-216 | 2-9- 41 |
| 570400-245 | 6-7- |
| 570400-251 | 2-9- 30 |
| 570400-317 | 2-9- 19 |
| 700145-1 | 2-3B- 68 |
| 700145-1 | 2-14- 5 |
| 700675-1 | 9-3- 18 |
| 700737-1 | 9-1- 72 |
| 710636 | 9-3- 41 |
| 710636-1 | 9-3- 21 |
| 710636-2 | 9-3- 28 |
| 711137-1 | 6-8- 14 |
| 711137-2 | 6-8- 24 |
| 711137-3 | 6-7- 11 |

| PART NUMBER | FIGURE AND INDEX NO. |
|---|---|
| 712017-1 | 2-14- 24 |
| 712017-2 | 2-14- 23 |
| 713026-4 | 5-5- |
| 713200-19 | 9-4- 12 |
| 713303-2 | 5-5- |
| 713739-1 | 2-3- 2 |
| 713739-1 | 2-3C- 5 |
| 713739-1 | 2-3D- 5 |
| 713739-1 | 2-15- 2 |
| 713739-1 | 2-16- 2 |
| 713739-1 | 2-17- 2 |
| 713749-4 | 2-16- |
| 713749-4 | 2-17- |
| 713749-6 | 2-13- 69 |
| 713749-6 | 2-14- 69 |
| 713749-6 | 2-15- 59 |
| 713749-6 | 2-16- 31 |
| 713749-6 | 2-17- 31 |
| 713749-6 | 2-18- 82 |
| 713750-1 | 2-15- |
| 713750-10 | 2-13- 7 |
| 713750-8 | 2-14- |
| 760003-1 | 2-14- 19 |
| 760004-1 | 2-14- 14 |
| 760004-4 | 2-14- 10 |
| 770004-21 | 7-1- 2 |
| 770004-21 | 7-2- 2 |
| 770004-22 | 6-8- 34 |
| 770004-22 | 7-1- 5 |
| 770004-24 | 6-8- 37 |
| 770004-24 | 7-1- 7 |
| 770004-25 | 7-1- 33 |
| 770004-28 | 7-1- 29 |
| 770004-29 | 7-1- 35 |
| 770004-30 | 7-1- 36 |
| 770015-7 | 6-8- 36 |
| 770015-7 | 7-1- 6 |
| 770015-9 | 6-8- 45 |
| 770015-9 | 7-1- 17 |
| 770021-1 | 8-4- 1 |
| 770033-11 | 7-1- 50 |
| 770033-33 | 5-3- 68 |
| 770034-11 | 5-3- 12 |
| 770034-11 | 5-3- |
| 770034-12 | 5-3- 13 |
| 770034-12 | 5-3- |
| 770034-2 | 5-3- 2 |
| 770034-2 | 5-3- |
| 770034-3 | 5-3- 30 |
| 770034-3 | 5-3- |
| 770037-2 | 9-1- 18 |
| 770038-2 | 10-5- 1 |
| 770039-1 | 1-1- |
| 770039-1 | 1-2- |
| 770039-1 | 1-3- 41 |
| 770039-1 | 1-4- |
| 770039-1 | 2-1- |
| 770039-1 | 2-2- 39 |
| 770039-1 | 2-4- |
| 770039-1 | 2-5- |
| 770039-1 | 2-6- 63 |
| 770039-1 | 2-7- |
| 770039-1 | 3-1- 27 |
| 770039-1 | 3-2- 29 |
| 770039-1 | 7-4- 67 |
| 770039-1 | 9-5- |
| 770039-1 | 3-5- 23 |
| 770039-1 | 5-1- 28 |
| 770039-1 | 5-2- 5 |
| 770039-1 | 5-3- 45 |
| 770039-1 | 5-4- 29 |
| 770039-1 | 5-9- |
| 770039-1 | 6-1- 58 |
| 770039-1 | 6-2- 18 |
| 770039-1 | 6-3- 60 |

| PART NUMBER | FIGURE AND INDEX NO. |
|---|---|
| 770039-1 | 6-4- 21 |
| 770039-1 | 6-5- 57 |
| 770039-1 | 6-6- 17 |
| 770039-1 | 7-1- 44 |
| 770039-1 | 7-2- 66 |
| 770039-1 | 7-3- 67 |
| 770039-2 | 9-5- 1 |
| 770039-3 | 9-5- 2 |
| 770041-1 | 7-4- 17 |
| 770041-1 | 6-1- 15 |
| 770041-1 | 6-3- 23 |
| 770041-1 | 6-5- 15 |
| 770041-1 | 6-7- 37 |
| 770041-1 | 6-8- 50 |
| 770041-1 | 6-9- 32 |
| 770041-1 | 6-10- 23 |
| 770041-1 | 6-11- 21 |
| 770041-1 | 7-1- 21 |
| 770041-1 | 7-2- 18 |
| 770041-1 | 7-3- 18 |
| 770043-1 | 7-4- |
| 770043-1 | 6-1- |
| 770043-1 | 6-3- |
| 770043-1 | 6-5- |
| 770043-1 | 7-1- 25 |
| 770043-1 | 7-2- |
| 770043-1 | 7-3- |
| 770043-2 | 7-4- 22 |
| 770043-2 | 6-1- 25 |
| 770043-2 | 6-3- 30 |
| 770043-2 | 6-5- 22 |
| 770043-2 | 7-1- |
| 770043-2 | 7-2- 23 |
| 770043-2 | 7-3- 23 |
| 770043-3 | 7-4- 23 |
| 770043-3 | 6-1- 26 |
| 770043-3 | 6-3- 31 |
| 770043-3 | 6-5- 23 |
| 770043-3 | 7-1- 26 |
| 770043-3 | 7-2- 24 |
| 770043-3 | 7-3- 24 |
| 770044-1 | 6-8- 48 |
| 770044-1 | 7-1- 19 |
| 770047-1 | 5-5- 2 |
| 770048-1 | 5-3- 22 |
| 770049-1 | 2-2- 21 |
| 770049-1 | 2-4- 33 |
| 770049-1 | 2-5- 42 |
| 770049-1 | 2-6- 29 |
| 770049-1 | 2-12- 36 |
| 770049-1 | 2-19- 18 |
| 770049-1 | 3-1- 17 |
| 770049-1 | 3-2- 17 |
| 770049-1 | 3-6- 22 |
| 770049-1 | 5-1- 17 |
| 770049-1 | 5-3- 23 |
| 770049-1 | 6-8- 9 |
| 770061-1 | 2-3B- 6 |
| 770062-1 | 2-3B- 5 |
| 770067-10 | 2-5- 51 |
| 770067-10 | 2-7- 41 |
| 770067-9 | 2-5- 49 |
| 770069-1 | 2-7- 50 |
| 770069-1 | 2-14- 29 |
| 770070-1 | 2-7- 49 |
| 770070-1 | 2-14- 36 |
| 770071-1 | 2-7- 48 |
| 770071-1 | 2-14- 37 |
| 770088-2 | 2-14- 8 |
| 770093-1 | 2-9- |
| 770093-1 | 2-9- 43 |
| 770094-1 | 5-4- 17 |
| 770400-214 | 2-9- 54 |
| 770400-233 | 6-8- |
| 770400-334 | 2-9- 42 |

| PART NUMBER | FIGURE AND INDEX NO. |
|---|---|
| 770622-1 | 5-1- |
| 770622-1 | 5-3- |
| 770622-1 | 5-4- |
| 770627-1 | 7-2- |
| 770627-2 | 7-4- 31 |
| 770627-2 | 7-3- 32 |
| 770628-1 | 7-4- 34 |
| 770628-1 | 7-2- 39 |
| 770628-1 | 7-3- 35 |
| 770630-1 | 7-2- |
| 770630-2 | 7-4- |
| 770630-2 | 7-3- |
| 770630-3 | 6-1- |
| 770630-3 | 6-3- |
| 770630-3 | 6-5- |
| 770631-3 | 9-1- |
| 770631-3 | 9-1- |
| 770634-1 | 7-4- 53 |
| 770634-1 | 6-1- 42 |
| 770634-1 | 6-3- 44 |
| 770634-1 | 6-5- 37 |
| 770634-1 | 6-7- 52 |
| 770634-1 | 6-8- 65 |
| 770634-1 | 6-9- 43 |
| 770634-1 | 6-10- 35 |
| 770634-1 | 6-11- 35 |
| 770634-1 | 7-2- 52 |
| 770634-1 | 7-3- 54 |
| 770634-2 | 7-4- 55 |
| 770634-2 | 6-1- 44 |
| 770634-2 | 6-3- 46 |
| 770634-2 | 6-5- 39 |
| 770634-2 | 6-7- 54 |
| 770634-2 | 6-8- 67 |
| 770634-2 | 6-9- 45 |
| 770634-2 | 6-10- 37 |
| 770634-2 | 6-11- 37 |
| 770634-2 | 7-2- 54 |
| 770634-2 | 7-3- 56 |
| 770635-1 | 7-4- 52 |
| 770635-1 | 6-1- 41 |
| 770635-1 | 6-3- 43 |
| 770635-1 | 6-5- 36 |
| 770635-1 | 6-7- 51 |
| 770635-1 | 6-8- 64 |
| 770635-1 | 6-9- 42 |
| 770635-1 | 6-10- 34 |
| 770635-1 | 6-11- 34 |
| 770635-1 | 7-2- 51 |
| 770635-1 | 7-3- 53 |
| 770637-1 | 9-1- 24 |
| 770637-10 | 9-1- 28 |
| 770638-1 | 5-5- 3 |
| 770639-1 | 6-1- 5 |
| 770639-1 | 6-9- 20 |
| 770639-1 | 7-2- 4 |
| 770639-2 | 6-1- 6 |
| 770639-2 | 6-9- 21 |
| 770639-2 | 7-2- 5 |
| 770640-2 | 9-1- 23 |
| 770640-3 | 9-1- 27 |
| 770641-1 | 10-1- 2 |
| 770641-1 | 10-1- 8 |
| 770641-1 | 10-1- 14 |
| 770641-1 | 10-1- 22 |
| 770641-1 | 10-1- 36 |
| 770641-1 | 10-1- 48 |
| 770641-1 | 10-1- 52 |
| 770643-1 | 10-1- 6 |
| 770643-1 | 10-1- 44 |
| 770643-1 | 10-1- 46 |
| 770645-3 | 1-3- 25 |
| 770645-3 | 2-6- 43 |
| 770650-1 | 1-2- 31 |
| 770650-1 | 2-5- 29 |

| PART NUMBER | FIGURE AND INDEX NO. |
|---|---|
| 770650-1 | 2-7- 63 |
| 770650-1 | 5-6- 13 |
| 770650-1 | 5-7- 22 |
| 770650-1 | 5-7- 23 |
| 770651-1 | 1-2- 32 |
| 770651-1 | 1-4- 40 |
| 770651-1 | 2-5- 30 |
| 770651-1 | 2-7- 64 |
| 770651-1 | 5-6- 14 |
| 770651-1 | 5-7- 24 |
| 770651-2 | 1-2- 33 |
| 770651-2 | 1-4- 41 |
| 770651-2 | 2-5- 31 |
| 770651-2 | 2-7- 65 |
| 770651-2 | 5-6- 15 |
| 770651-2 | 5-7- 25 |
| 770651-3 | 1-2- 34 |
| 770651-3 | 2-5- 32 |
| 770651-3 | 2-7- 66 |
| 770651-3 | 5-6- 16 |
| 770651-3 | 5-7- 26 |
| 770652-1 | 5-7- 31 |
| 770653-1 | 6-1- |
| 770653-1 | 6-9- |
| 770653-1 | 7-2- |
| 770653-2 | 7-4- |
| 770653-2 | 6-3- |
| 770653-2 | 6-5- |
| 770653-2 | 6-10- |
| 770653-2 | 6-11- |
| 770653-2 | 7-3- |
| 770653-3 | 6-1- 9 |
| 770653-3 | 7-2- 12 |
| 770653-4 | 7-4- 11 |
| 770653-4 | 6-3- 16 |
| 770653-4 | 6-5- 9 |
| 770653-4 | 7-3- 12 |
| 770653-5 | 7-4- 12 |
| 770653-5 | 6-1- 10 |
| 770653-5 | 6-3- 17 |
| 770653-5 | 6-5- 10 |
| 770653-5 | 7-2- 13 |
| 770653-5 | 7-3- 13 |
| 770653-6 | 6-1- |
| 770653-6 | 6-7- 36 |
| 770653-6 | 6-9- 27 |
| 770653-6 | 7-2- |
| 770653-7 | 7-4- |
| 770653-7 | 6-3- |
| 770653-7 | 6-5- |
| 770653-7 | 6-10- 21 |
| 770653-7 | 6-11- 19 |
| 770653-7 | 7-3- |
| 770653-8 | 6-7- |
| 770654-1 | 6-1- 13 |
| 770654-1 | 6-9- 31 |
| 770654-1 | 7-2- 16 |
| 770656-2 | 6-1- 7 |
| 770656-2 | 6-9- 22 |
| 770656-2 | 6-11- 15 |
| 770656-2 | 7-2- 6 |
| 770656-5 | 6-1- 8 |
| 770656-5 | 6-9- 23 |
| 770656-5 | 7-2- 7 |
| 770668-1 | 5-7- 34 |
| 770675-1 | 5-6- 24 |
| 770676-1 | 2-1- 12 |
| 770676-2 | 2-1- |
| 770681-1 | 8-4- |
| 770681-2 | 8-4- 10 |
| 770681-3 | 8-4- 11 |
| 770682-1 | 2-2- 4 |
| 770685-1 | 8-2- 41 |
| 770687-1 | 9-1- 36 |
| 770687-4 | 9-1- 42 |

| PART NUMBER | FIGURE AND INDEX NO. |
|---|---|
| 770691-1 | 2-9- |
| 770692-1 | 2-9- 55 |
| 770693-1 | 9-1- 40 |
| 770696-1 | 2-9- |
| 770696-1 | 2-9- 66 |
| 770696-4 | 1-2- 46 |
| 770697-1 | 7-4- |
| 770697-1 | 6-7- |
| 770697-1 | 6-8- |
| 770697-1 | 6-9- |
| 770697-1 | 6-10- |
| 770697-1 | 6-11- |
| 770697-1 | 7-1- |
| 770697-1 | 7-2- |
| 770697-1 | 7-3- |
| 770697-2 | 7-4- |
| 770697-2 | 6-7- 45 |
| 770697-2 | 6-8- 55 |
| 770697-2 | 6-9- 36 |
| 770697-2 | 6-10- 31 |
| 770697-2 | 6-11- 29 |
| 770697-2 | 7-1- |
| 770697-2 | 7-2- |
| 770697-2 | 7-3- |
| 770697-3 | 7-4- |
| 770697-3 | 6-7- 44 |
| 770697-3 | 6-8- 54 |
| 770697-3 | 6-9- 35 |
| 770697-3 | 6-10- 30 |
| 770697-3 | 6-11- 28 |
| 770697-3 | 7-1- |
| 770697-3 | 7-2- |
| 770697-3 | 7-3- |
| 770698-1 | 2-15- 7 |
| 770699-1 | 2-15- 11 |
| 770701-1 | 2-15- 12 |
| 770701-2 | 2-15- 13 |
| 770702-1 | 2-15- 25 |
| 770702-112 | 2-16- 9 |
| 770702-112 | 2-17- 9 |
| 770702-114 | 2-16- 14 |
| 770702-114 | 2-17- 14 |
| 770702-3 | 2-15- 14 |
| 770710-2 | 2-3- 16 |
| 770710-2 | 2-3A- 16 |
| 770710-2 | 2-3B- 20 |
| 770710-2 | 2-3C- 17 |
| 770710-2 | 2-3D- 17 |
| 770710-5 | 2-3- 9 |
| 770710-5 | 2-3A- 8 |
| 770710-5 | 2-3B- 12 |
| 770710-5 | 2-3C- 9 |
| 770710-5 | 2-3D- 9 |
| 770710-5 | 2-3E- 11 |
| 770710-6 | 2-3- 17 |
| 770710-6 | 2-3B- 21 |
| 770710-6 | 2-3C- 18 |
| 770710-6 | 2-3D- 18 |
| 770712-1 | 2-4- 32 |
| 770712-1 | 2-5- 41 |
| 770712-1 | 2-6- 28 |
| 770712-1 | 2-19- 17 |
| 770712-1 | 6-8- 13 |
| 770713-1 | 2-4- 37 |
| 770713-1 | 2-6- 33 |
| 770713-1 | 2-7- 44 |
| 770713-1 | 2-12- 40 |
| 770713-1 | 2-14- 32 |
| 770713-1 | 2-19- 22 |
| 770713-1 | 3-6- 18 |
| 770713-1 | 6-8- 5 |
| 770714-1 | 9-1- 65 |
| 770715-2 | 9-3- 1 |
| 770715-2 | 9-3- 24 |
| 770715-2 | 9-3- 43 |

| PART NUMBER | FIGURE AND INDEX NO. |
|---|---|
| 770715-2 | 9-3- 50 |
| 770717-1 | 9-1- 63 |
| 770717-2 | 2-9- |
| 770717-2 | 2-9- 67 |
| 770717-2 | 9-1- 64 |
| 770718-2 | 9-3- 32 |
| 770718-2 | 9-3- 42 |
| 770722-1 | 2-4- |
| 770722-1 | 2-5- |
| 770722-1 | 2-6- |
| 770722-1 | 2-7- |
| 770722-1 | 2-19- |
| 770723-1 | 2-4- |
| 770723-1 | 2-5- |
| 770723-1 | 2-6- |
| 770723-1 | 2-7- |
| 770723-1 | 2-19- |
| 770727-1 | 6-7- 17 |
| 770727-1 | 6-8- 30 |
| 770727-1 | 6-9- 15 |
| 770727-1 | 6-10- 13 |
| 770727-1 | 6-11- 10 |
| 770729-1 | 10-1- 58 |
| 770730-1 | 9-3- 11 |
| 770731-1 | 9-3- 6 |
| 770731-1 | 9-3- 10 |
| 770731-1 | 9-3- 33 |
| 770731-1 | 9-3- 51 |
| 770732-1 | 9-3- |
| 770732-2 | 9-3- |
| 770732-2 | 9-3- 38 |
| 770732-3 | 9-3- 35 |
| 770750-204 | 2-9- 56 |
| 770750-230 | 6-9- |
| 812509-21 | 7-1- 38 |
| 812509-24 | 6-1- 34 |
| 812509-24 | 6-2- 7 |
| 812509-24 | 6-3- 36 |
| 812509-24 | 6-4- 11 |
| 812509-24 | 6-6- 4 |
| 812509-24 | 6-7- 5 |
| 812509-24 | 6-8- 18 |
| 812509-24 | 6-9- 6 |
| 812509-24 | 6-10- 10 |
| 812509-24 | 6-11- 5 |
| 812509-24 | 7-2- 45 |
| 812509-24 | 7-3- 46 |
| 812509-24 | 7-4- 45 |
| 812509-25 | 6-1- |
| 812509-25 | 6-2- |
| 812509-25 | 6-3- |
| 812509-25 | 6-4- |
| 812509-25 | 6-5- |
| 812509-25 | 6-6- |
| 812509-3 | 6-1- |
| 812509-3 | 6-2- |
| 812509-3 | 6-3- |
| 812509-3 | 6-4- |
| 812509-3 | 6-5- |
| 812509-3 | 6-6- |
| 812534-2 | 2-2- 68 |
| 812534-2 | 2-4- 57 |
| 812534-2 | 2-5- 80 |
| 812800-56 | 7-1- 46 |
| 812800-56 | 7-2- 26 |
| 812800-56 | 7-3- 26 |
| 812800-56 | 7-4- 25 |
| 813626-2 | 2-2- 67 |
| 813626-2 | 2-4- 55 |
| 813626-2 | 2-5- 78 |
| 814308-2 | 7-4- 20 |
| 814308-2 | 6-1- 22 |
| 814308-2 | 6-3- 33 |
| 814308-2 | 6-5- 25 |
| 814308-2 | 6-7- 46 |

| PART NUMBER | FIGURE AND INDEX NO. |
|---|---|
| 814308-2 | 6-8- 57 |
| 814308-2 | 6-9- 37 |
| 814308-2 | 6-10-31A |
| 814308-2 | 6-11- 30 |
| 814308-2 | 7-1- 24 |
| 814308-2 | 7-2- 21 |
| 814308-2 | 7-3- 21 |
| 814308-5 | 7-4- |
| 814308-5 | 6-1- 23 |
| 814308-5 | 6-3- 34 |
| 814308-5 | 6-5- 26 |
| 814308-5 | 7-1- |
| 814308-5 | 7-2- |
| 814308-5 | 7-3- |
| 861520-1 | 2-18- 44 |
| 861520-1 | 2-18- 54 |
| 880650-1 | 1-4- 39 |
| 92-0003-00 | 3-1- |
| 92-0003-00 | 3-2- |
| 92-0003-00 | 3-2- |
| 92-0004-00 | 3-1- |
| 92-0004-00 | 3-2- |
| 92-0004-00 | 3-2- |
| 1K OHM 1/2W | 2-9- |
| 1L254-73 | 9-1- 79 |
| 1000 OHM 1 WATT | 9-1- |
| 1000 OHM 1/2W10% | 5-7- |
| 1000 OHM 1/2W10% | 5-7- |
| 1000 OHM 1/2W10% | 5-7- |
| 10336-004-5 | 2-3E- 13 |
| 10336-004-6 | 2-3E- 10 |
| 12-195 | 3-2- |
| 12VDC | 9-1- |
| 1200096-1 | 8-3- 2 |
| 1200096-1 | 8-3- 8 |
| 1200098-1 | 8-3- 1 |
| 1200098-1 | 8-3- 7 |
| 1200167-1 | 2-3- 27 |
| 1200167-1 | 2-3A- 43 |
| 1200167-1 | 2-3B- 47 |
| 1200167-1 | 2-3C- 44 |
| 1200167-1 | 2-13- 57 |
| 1200167-1 | 2-14- 57 |
| 1200167-1 | 2-15- 48 |
| 1200168-1 | 2-3- 29 |
| 1200168-1 | 2-3A- 47 |
| 1200168-1 | 2-3B- 51 |
| 1200168-1 | 2-3C- 48 |
| 1200168-1 | 2-13- 64 |
| 1200168-1 | 2-14- 64 |
| 1200168-1 | 2-15- 54 |
| 1200169-1 | 2-3- 28 |
| 1200169-1 | 2-3A- 45 |
| 1200169-1 | 2-3B- 49 |
| 1200169-1 | 2-3C- 46 |
| 1200169-1 | 2-13- 62 |
| 1200169-1 | 2-14- 62 |
| 1200169-1 | 2-15- 52 |
| 1200174-1 | 2-15- 31 |
| 1200180-1 | 2-3- 33 |
| 1200180-1 | 2-3A- 35 |
| 1200180-1 | 2-3B- 39 |
| 1200180-1 | 2-13- 47 |
| 1200180-1 | 2-14- 43 |
| 1200181-1 | 2-3- 11 |
| 1200181-1 | 2-3B- 19 |
| 1200181-4 | 2-3- 12 |
| 1200181-4 | 2-3A- 10 |
| 1200181-4 | 2-3B- 14 |
| 1200181-4 | 2-3C- 11 |
| 1200181-4 | 2-3D- 11 |
| 1200181-5 | 2-3A- 15 |
| 1200181-5 | 2-3C- 16 |
| 1200181-5 | 2-3D- 16 |
| 1200182 | 2-15- 38 |

| PART NUMBER | FIGURE AND INDEX NO. |
|---|---|
| 1200182-1 | 2-3- 34 |
| 1200182-1 | 2-3A- 38 |
| 1200182-1 | 2-3B- 42 |
| 1200182-1 | 2-3C- 43 |
| 1200182-1 | 2-13- 40 |
| 1200182-1 | 2-14- 40 |
| 1200182-2 | 2-3- 35 |
| 1200182-2 | 2-3A- 36 |
| 1200182-2 | 2-3B- 40 |
| 1200182-2 | 2-3C- 37 |
| 1200182-2 | 2-13- 45 |
| 1200182-2 | 2-14- 41 |
| 1200182-2 | 2-15- 32 |
| 1200182-9 | 2-3- 37 |
| 1200182-9 | 2-3A- |
| 1200182-9 | 2-3A- 40 |
| 1200182-9 | 2-3B- |
| 1200182-9 | 2-3B- 44 |
| 1200182-9 | 2-3C- 39 |
| 1200182-9 | 2-3C- |
| 1200182-9 | 2-13- 42 |
| 1200182-9 | 2-13- |
| 1200182-9 | 2-14- |
| 1200182-9 | 2-14- 45 |
| 1200182-9 | 2-15- 34 |
| 1200182-9 | 2-15- |
| 1200183-1 | 2-3- 41 |
| 1200183-1 | 2-3A- 26 |
| 1200183-1 | 2-3B- 30 |
| 1200183-1 | 2-3C- 27 |
| 1200183-1 | 2-13- 49 |
| 1200183-1 | 2-14- 49 |
| 1200183-1 | 2-15- 40 |
| 1205-GC12 | 9-1- 2 |
| 1205-GC12 | 9-1- 13 |
| 1205-GC12 | 9-1- 22 |
| 1205-GC12 | 9-1- |
| 1205-GC12 | 9-1- 77 |
| 1205-48-3C-AG- | 9-1- |
| 1213614-11 | 2-2- |
| 1213614-11 | 3-2- 60 |
| 1213614-11 | 6-3- 65 |
| 1213614-11 | 6-4- 26 |
| 1213614-3 | 5-6- 30 |
| 1213614-3 | 5-7- 40 |
| 1213614-4 | 5-6- 31 |
| 1213614-4 | 5-7- 41 |
| 1213614-5 | 5-3- 46 |
| 1213614-6 | 3-1- 42 |
| 1213614-6 | 3-2- 44 |
| 1213614-6 | 5-1- |
| 1213614-6 | 5-3- 72 |
| 1213614-7 | 5-1- 30 |
| 1213614-8 | 5-1- 31 |
| 1220091-1 | 2-3D- 27 |
| 1220091-1 | 2-16- 24 |
| 1220091-1 | 2-17- 24 |
| 125-195 | 3-2- |
| 12509-24 | 6-5- 28 |
| 126-153 | 2-5- |
| 126-195 | 2-5- |
| 126-217 | 1-1- |
| 126-217 | 1-2- |
| 126-217 | 2-4- |
| 126-217 | 2-5- |
| 126-222 | 9-1- |
| 126-222 | 9-1- 39 |
| 126-222 | 9-1- |
| 126-222 | 9-1- 75 |
| 126-806 | 2-10- |
| 126-807 | 6-1- |
| 126-807 | 6-2- |
| 126-807 | 6-3- |
| 126-807 | 6-4- |
| 126-807 | 6-5- |

| PART NUMBER | FIGURE AND INDEX NO. |
|---|---|
| 126-807 | 6-6- |
| 126-808 | 6-1- |
| 126-808 | 6-2- |
| 126-808 | 6-3- |
| 126-808 | 6-4- |
| 126-808 | 6-5- |
| 126-808 | 6-6- |
| 126-810 | 2-5- |
| 126-810 | 2-10- |
| 1260442-1 | 2-15- 17 |
| 1260442-1 | 2-15- 21 |
| 1260645-1 | 2-16- 18 |
| 1260649-1 | 2-17- 18 |
| 1260651-1 | 2-16- 8 |
| 1260651-1 | 2-17- 8 |
| 1260652-1 | 2-16- 21 |
| 1260652-1 | 2-17- 21 |
| 126103-001 | 6-7- 8 |
| 126103-001 | 6-8- 21 |
| 126103-001 | 6-9- 10 |
| 126103-001 | 6-10- 8 |
| 126103-001 | 6-11- 7 |
| 1270012-1 | 8-2- 1 |
| 1270012-1 | 8-2- 8 |
| 1270012-1 | 8-2- 15 |
| 1270012-1 | 8-2- 23 |
| 1270012-1 | 8-2- 31 |
| 1270012-7 | 8-4- |
| 1270013-1 | 8-2- 20 |
| 1270013-1 | 8-2- 29 |
| 1270014-1 | 5-1- 49 |
| 1270015-1 | 7-1- 53 |
| 1270042-1 | 8-1- 1 |
| 1270042-2 | 8-1- 2 |
| 1270043-1 | 8-1- 7 |
| 1270043-2 | 9-4- 45 |
| 1270049-1 | 2-3D- 28 |
| 1270049-1 | 2-16- 25 |
| 1270049-1 | 2-17- 25 |
| 1270049-3 | 2-3D- 29 |
| 1270049-3 | 2-16- 26 |
| 1270049-3 | 2-17- 26 |
| 1270051-1 | 2-3D- 31 |
| 1270051-1 | 2-16- 28 |
| 1270051-1 | 2-17- 28 |
| 1270174-1 | 2-3C- 36 |
| 1270422-1 | 8-6- 1 |
| 1270422-2 | 8-6- |
| 1270423-3 | 1-3- 26 |
| 1270423-3 | 2-6- 44 |
| 1270433-3 | 2-6- 42 |
| 1270435-1 | 7-4- 4 |
| 1270435-1 | 6-11- 14 |
| 1270435-3 | 6-5- 5 |
| 1270435-4 | 6-5- |
| 1270438-1 | 9-4- 34 |
| 1270439-1 | 7-4- 13 |
| 1270439-1 | 6-3- 19 |
| 1270439-1 | 6-5- 11 |
| 1270439-1 | 6-7- 43 |
| 1270439-1 | 6-10- 26 |
| 1270439-1 | 6-11- 24 |
| 1270439-1 | 7-3- 14 |
| 1270440-1 | 7-4- 5 |
| 1270440-1 | 6-3- 14 |
| 1270440-1 | 6-5- 7 |
| 1270440-1 | 6-10- 17 |
| 1270440-1 | 7-3- 6 |
| 1270440-2 | 7-4- 6 |
| 1270440-2 | 6-3- 15 |
| 1270440-2 | 6-5- 8 |
| 1270440-2 | 7-3- 7 |
| 1270444-1 | 8-6- 2 |
| 1270444-1 | 8-6-10A |
| 1270444-2 | 8-6- |

| PART NUMBER | FIGURE AND INDEX NO. |
|---|---|
| 1270446-1 | 2-1- 13 |
| 1270446-2 | 2-1- |
| 1270447-1 | 8-2- 43 |
| 1270456-1 | 9-4- 43 |
| 1270465-1 | 2-8- 9 |
| 1270465-2 | 2-8- 7 |
| 1270465-2 | 3-3- |
| 1270465-3 | 2-8- 42 |
| 1270465-3 | 2-11- 11 |
| 1270465-3 | 2-12- 9 |
| 1270465-4 | 2-8- 8 |
| 1270465-4 | 2-11- 7 |
| 1270465-4 | 2-12- 5 |
| 1270468-1 | 9-4- 63 |
| 1270475-230 | 6-11- |
| 1270616-2 | 9-1- 30 |
| 1270617-1 | 9-1- 31 |
| 1270618-4 | 9-1- 32 |
| 1270627-10 | 5-4- 22 |
| 1270627-10 | 5-4- |
| 1270627-11 | 5-4- |
| 1270627-11 | 5-4- |
| 1270627-12 | 5-4- |
| 1270627-12 | 5-4- |
| 1270627-17 | 5-1- 22 |
| 1270627-17 | 5-1- |
| 1270627-18 | 5-1- 23 |
| 1270627-18 | 5-1- |
| 1270627-19 | 5-1- |
| 1270627-20 | 5-1- |
| 1270627-29 | 1-1- 11 |
| 1270627-29 | 1-3- 12 |
| 1270627-29 | 1-4- 18 |
| 1270627-29 | 2-4- 16 |
| 1270627-29 | 2-6- 18 |
| 1270627-29 | 2-7- 23 |
| 1270627-29 | 2-19- 13 |
| 1270627-30 | 1-1- 12 |
| 1270627-30 | 1-3- 13 |
| 1270627-30 | 1-4- 19 |
| 1270627-30 | 2-4- 17 |
| 1270627-30 | 2-6- 19 |
| 1270627-30 | 2-7- 24 |
| 1270627-30 | 2-19- 14 |
| 1270627-33 | 1-2- 35 |
| 1270627-33 | 2-5- 3 |
| 1270627-34 | 1-2- 36 |
| 1270627-34 | 2-5- 38 |
| 1270627-41 | 2-2-55A |
| 1270627-42 | 2-2-55B |
| 1270627-43 | 2-2- |
| 1270627-44 | 2-2- |
| 1270627-5 | 5-3- 14 |
| 1270627-56 | 5-3- 16 |
| 1270627-56 | 5-8- 21 |
| 1270627-57 | 5-6- 11 |
| 1270627-57 | 5-7- 19 |
| 1270627-58 | 5-6- 10 |
| 1270627-6 | 5-3- 15 |
| 1270627-60 | 5-1- 24 |
| 1270627-60 | 5-1- |
| 1270627-61 | 5-1- 25 |
| 1270627-61 | 5-1- |
| 1270627-65 | 5-4- |
| 1270627-65 | 5-4- |
| 1270627-66 | 5-4- 23 |
| 1270627-66 | 5-4- |
| 1270627-67 | 5-4- 24 |
| 1270627-67 | 5-4- |
| 1270627-68 | 5-4- 25 |
| 1270627-68 | 5-4- |
| 1270627-69 | 1-2- 13 |
| 1270627-69 | 1-2- 37 |
| 1270627-69 | 1-4- 20 |
| 1270627-69 | 2-5- 35 |

| PART NUMBER | FIGURE AND INDEX NO. |
|---|---|
| 1270627-69 | 2-5- 39 |
| 1270627-69 | 2-7- 21 |
| 1270627-69 | 2-7- 25 |
| 1270627-7 | 5-3- |
| 1270627-70 | 1-1- 13 |
| 1270627-70 | 1-3- 14 |
| 1270627-70 | 2-4- 18 |
| 1270627-70 | 2-6- 16 |
| 1270627-70 | 2-6- 20 |
| 1270627-70 | 2-19- 15 |
| 1270627-71 | 3-1- 15 |
| 1270627-71 | 3-2- 15 |
| 1270627-73 | 6-3- 8 |
| 1270627-73 | 6-4- 8 |
| 1270627-74 | 6-3- 7 |
| 1270627-74 | 6-4- 7 |
| 1270627-75 | 2-2-55C |
| 1270627-75 | 2-12- 46 |
| 1270627-8 | 5-3- |
| 1270627-85 | 1-1- 9 |
| 1270627-85 | 1-2- 11 |
| 1270627-85 | 1-3- 10 |
| 1270627-85 | 1-4- 16 |
| 1270627-85 | 2-2-14A |
| 1270627-85 | 2-4- 14 |
| 1270627-85 | 2-5- 33 |
| 1270627-85 | 2-6- 14 |
| 1270627-85 | 2-7- 19 |
| 1270627-85 | 2-12- 44 |
| 1270627-85 | 3-1- 44 |
| 1270627-85 | 3-2-14A |
| 1270627-85 | 5-6- 9 |
| 1270627-85 | 5-7- 17 |
| 1270627-85 | 5-8- 19 |
| 1270627-85 | 6-3- 5 |
| 1270627-85 | 6-4- 5 |
| 1270627-86 | 1-1- 10 |
| 1270627-86 | 1-2- 12 |
| 1270627-86 | 1-3- 11 |
| 1270627-86 | 1-4- 17 |
| 1270627-86 | 2-2-14B |
| 1270627-86 | 2-4- 15 |
| 1270627-86 | 2-5- 34 |
| 1270627-86 | 2-6- 15 |
| 1270627-86 | 2-7- 20 |
| 1270627-86 | 2-12- 45 |
| 1270627-86 | 3-1- 45 |
| 1270627-86 | 3-2-14B |
| 1270627-86 | 5-6- 8 |
| 1270627-86 | 5-7- 18 |
| 1270627-86 | 5-8- 20 |
| 1270627-86 | 6-3- 6 |
| 1270627-86 | 6-4- 6 |
| 1270627-89 | 6-10- 6 |
| 1270627-9 | 5-4- 21 |
| 1270627-9 | 5-4- |
| 1270627-90 | 3-6- 26 |
| 1270631-1 | 5-6- 17 |
| 1270631-1 | 5-7- 21 |
| 1270631-2 | 5-6- 18 |
| 1270635-1 | 6-3- 12 |
| 1270635-1 | 6-10- 16 |
| 1270635-1 | 7-3- 4 |
| 1270635-2 | 6-3- |
| 1270638-1 | 9-4- 19 |
| 1270640-1 | 4-1- |
| 1270645-1 | 2-4- 29 |
| 1270645-1 | 2-5- 46 |
| 1270645-1 | 2-7- 38 |
| 1270646-1 | 2-2- 15 |
| 1270675-230 | 6-10- |
| 13A | 3-3- |
| 13A | 3-3- |
| 13A | 3-3- |
| 13A | 9-1- |

| PART NUMBER | FIGURE AND INDEX NO. |
|---|---|
| 13A | 9-1- |
| 13A | 5-1- |
| 13A | 5-2- |
| 13B | 3-2- |
| 13B | 9-1- |
| 13B | 9-1- |
| 13B | 5-1- |
| 13B | 5-1- |
| 13B | 5-2- |
| 13B | 5-3- |
| 13B | 5-3- |
| 13B | 5-3- |
| 13B | 5-3- |
| 13B | 5-4- |
| 13B | 5-4- |
| 13B | 5-4- |
| 13B | 5-8- |
| 13B | 5-8- |
| 13B | 5-8- |
| 13E | 5-1- |
| 13E | 5-8- |
| 13E | 5-8- |
| 13E | 5-8- |
| 135-40 | 8-5- 9 |
| 135-40 | 8-5- 18 |
| 135-40 | 8-6- 5 |
| 135-40 | 8-6- 11 |
| 14S329 | 10-5- 7 |
| 1400019-14 | 2-9- |
| 1400019-14 | 2-9- 78 |
| 1400106-170 | 2-18- 75 |
| 1400106-68 | 2-3E- 49 |
| 1413517-11 | 9-4- 25 |
| 1422023-1 | 2-3E- 26 |
| 1422023-1 | 2-18- 10 |
| 1422023-2 | 2-3E- 27 |
| 1422023-2 | 2-18- 11 |
| 1422023-3 | 2-3E- 28 |
| 1422023-3 | 2-18- 12 |
| 1450 | 5-1- 37 |
| 1450 | 5-2- 18 |
| 1450 | 5-3- |
| 1460326-1 | 2-18- 41 |
| 1462000-2 | 2-3E- 34 |
| 1462000-2 | 2-18- 19 |
| 1470000-28 | 2-9- 70 |
| 1470008-3 | 8-1- 21 |
| 1470030-1 | 5-3- |
| 1470030-1 | 5-4- |
| 1470030-1 | 5-6- |
| 1470030-2 | 5-3- |
| 1470030-2 | 5-4- |
| 1470030-2 | 5-6- |
| 1470030-3 | 5-3- |
| 1470030-3 | 5-4- |
| 1470030-3 | 5-6- |
| 1470048-1 | 9-3- 47 |
| 1470048-1 | 9-3- 56 |
| 1470048-2 | 9-3- 46 |
| 1470048-2 | 9-3- 54 |
| 1470048-3 | 9-3- 48 |
| 1470048-3 | 9-3- 57 |
| 1470048-4 | 9-3- 49 |
| 1470048-4 | 9-3- 55 |
| 1470048-5 | 9-3- |
| 1470048-5 | 9-3- |
| 1470048-6 | 9-3- |
| 1470048-6 | 9-3- |
| 1470048-7 | 9-3- |
| 1470048-7 | 9-3- 57 |
| 1470048-8 | 9-3- |
| 1470048-8 | 9-3- |
| 1470053-1 | 8-1- 10 |
| 1470053-1 | 8-1- 14 |
| 1470053-1 | 8-1- 18 |

| PART NUMBER | FIGURE AND INDEX NO. |
|---|---|
| 1470053-7 | 3-1- 55 |
| 1470056-1 | 1-2- 21 |
| 1470056-1 | 2-2- 55 |
| 1470056-1 | 2-5- 19 |
| 1470056-1 | 3-5- 6 |
| 1470056-1 | 5-3- 25 |
| 1470056-1 | 5-8- 23 |
| 1470056-10 | 5-6- |
| 1470056-11 | 1-3- 16 |
| 1470056-11 | 2-6- 22 |
| 1470056-11 | 5-6- 19 |
| 1470056-12 | 5-6- |
| 1470056-13 | 1-2- 26 |
| 1470056-13 | 1-3- 17 |
| 1470056-13 | 1-4- 24 |
| 1470056-13 | 2-5- 24 |
| 1470056-13 | 2-6- 23 |
| 1470056-13 | 2-7- 33 |
| 1470056-13 | 3-5- 32 |
| 1470056-13 | 5-6- 20 |
| 1470056-14 | 1-3- 19 |
| 1470056-14 | 2-6- 25 |
| 1470056-14 | 3-5- |
| 1470056-15 | 5-3- |
| 1470056-16 | 5-3- 28 |
| 1470056-16 | 5-8- 25 |
| 1470056-16 | 5-8- |
| 1470056-2 | 2-2- |
| 1470056-4 | 1-2- 22 |
| 1470056-4 | 2-2- 58 |
| 1470056-4 | 2-5- 20 |
| 1470056-4 | 3-1- 54 |
| 1470056-4 | 3-5- 7 |
| 1470056-4 | 5-3- 26 |
| 1470056-4 | 5-7- 9 |
| 1470056-4 | 5-8- 24 |
| 1470056-5 | 2-2- |
| 1470056-5 | 5-3- |
| 1470056-5 | 5-3- |
| 1470056-7 | 1-2- 23 |
| 1470056-7 | 2-5- 21 |
| 1470056-7 | 5-7- 13 |
| 1470056-8 | 2-2- |
| 1470056-8 | 5-4- 27 |
| 1470056-9 | 1-2- 29 |
| 1470056-9 | 2-2- 17 |
| 1470056-9 | 2-5- 27 |
| 1470056-9 | 2-7- 37 |
| 1470056-9 | 5-4- |
| 1470056-9 | 5-8- |
| 1470056-9 | 5-9- 6 |
| 1470059-3 | 8-6- 10 |
| 1470060-1 | 8-2- 27 |
| 1470064-1 | 10-1- 27 |
| 1470064-1 | 10-1- 41 |
| 1470064-4 | 10-1- 26 |
| 1470064-4 | 10-1- 40 |
| 1470066-12 | 2-18- 67 |
| 1470066-14 | 2-18- 62 |
| 1470066-23 | 2-3E- 4 |
| 1470066-23 | 2-18- 2 |
| 1470066-24 | 2-3E- 5 |
| 1470066-24 | 2-18- 3 |
| 1470066-26 | 2-18- 34 |
| 1470066-32 | 2-18- 43 |
| 1470066-33 | 2-18- 42 |
| 1470066-34 | 2-18- 52 |
| 1470066-35 | 2-18- 53 |
| 1470066-50 | 2-18- 60 |
| 1470066-52 | 2-18- 61 |
| 1470066-54 | 2-18- 40 |
| 1470066-55 | 2-18- 63 |
| 1470066-9 | 2-3E- |
| 1470067-13 | 2-18- |
| 1470067-14 | 2-18- |

| PART NUMBER | FIGURE AND INDEX NO. |
|---|---|
| 1470067-23 | 2-18- 39 |
| 1470067-27 | 2-18- |
| 1470067-28 | 2-18- 36 |
| 1470067-4 | 2-3E- 29 |
| 1470067-4 | 2-18- 14 |
| 1470067-5 | 2-18- |
| 1470067-6 | 2-3E- 35 |
| 1470067-6 | 2-18- |
| 1470067-7 | 2-18- 20 |
| 1470067-8 | 2-18- 24 |
| 1470075-1 | 2-2- |
| 1470078-10 | 7-5- 5 |
| 1470078-2 | 1-1- 14 |
| 1470078-2 | 2-4- 19 |
| 1470078-2 | 7-5- 4 |
| 1470078-3 | 1-1- 15 |
| 1470078-3 | 2-4- 20 |
| 1470078-4 | 1-1- 16 |
| 1470078-4 | 2-4- 21 |
| 1470078-4 | 7-5- 8 |
| 1470078-5 | 7-5- |
| 1470078-6 | 7-5- |
| 1470078-8 | 7-5- 6 |
| 1470078-9 | 7-5- 7 |
| 1470082-4 | 8-5- 19 |
| 1470083-1 | 7-5- |
| 1470083-1 | 5-9- 2 |
| 1470083-2 | 7-5- 13 |
| 1470083-2 | 5-9- |
| 1470083-3 | 7-5- 14 |
| 1470083-3 | 5-9- |
| 1470083-4 | 7-5- 15 |
| 1470083-4 | 5-9- |
| 1470085-2 | 9-1- 51 |
| 1470085-2 | 9-1- 82 |
| 1470085-2 | 4-1- 32 |
| 1470088-28 | 1-3- |
| 1470091-1 | 1-3- 27 |
| 1470091-1 | 2-6- 45 |
| 1470092-1 | 1-3- 28 |
| 1470092-1 | 2-6- 46 |
| 1470094-1 | 1-3- 23 |
| 1470094-1 | 2-6- 41 |
| 1470096-2 | 9-4- 26 |
| 1470097-1 | 1-2- 24 |
| 1470097-1 | 2-5- 22 |
| 1470098-1 | 1-2- 27 |
| 1470098-1 | 1-3- 21 |
| 1470098-1 | 1-4- 22 |
| 1470098-1 | 2-5- 25 |
| 1470098-1 | 2-6- 27 |
| 1470098-1 | 2-7- 31 |
| 1470111-1 | 3-1- 52 |
| 1470111-1 | 3-5- 9 |
| 1470111-1 | 3-5- 35 |
| 1470113-5 | 1-3- 20 |
| 1470113-5 | 2-6- 26 |
| 1470113-7 | 1-3- 18 |
| 1470113-7 | 1-4- 26 |
| 1470113-7 | 2-6- 24 |
| 1470113-7 | 2-7- 35 |
| 1470113-7 | 5-6-20A |
| 1470114-1 | 8-1- 15 |
| 1470114-1 | 8-2- 45 |
| 1470114-2 | 8-1- |
| 1470114-2 | 8-2- |
| 1470114-3 | 8-1- 16 |
| 1470114-3 | 8-2- 46 |
| 1470123-2 | 8-1- |
| 1470123-4 | 8-1- 19 |
| 1470125-1 | 8-5- 20 |
| 1470127-1 | 2-2- 19 |
| 1470127-1 | 2-2- 56 |
| 1470127-2 | 2-2- |
| 1470127-2 | 2-2- |

| PART NUMBER | FIGURE AND INDEX NO. |
|---|---|
| 1470135-3 | 7-5- 28 |
| 1470135-4 | 7-5- 18 |
| 1470135-5 | 7-5- |
| 1470201-15 | 9-1- |
| 1470201-18 | 9-1- 48 |
| 1470201-20 | 9-1- |
| 1470201-22 | 9-1- 94 |
| 1470201-4 | 9-1- |
| 1470201-4 | 9-1- |
| 1470201-5 | 9-1- 46 |
| 1470201-5 | 9-1- 95 |
| 1470215-1 | 10-1- 45 |
| 1470218-1 | 10-1- 43 |
| 1470219-1 | 10-1- 1 |
| 1470219-1 | 10-1- 7 |
| 1470219-1 | 10-1- 13 |
| 1470219-1 | 10-1- 21 |
| 1470219-1 | 10-1- 35 |
| 1470219-1 | 10-1- 47 |
| 1470219-1 | 10-1- 51 |
| 1470220-1 | 10-1- 18 |
| 1470220-1 | 10-1- 29 |
| 1470220-4 | 10-1- 30 |
| 1470220-5 | 10-1- 33 |
| 1470220-8 | 10-1- 17 |
| 1470220-8 | 10-1- 32 |
| 1470221-1 | 10-1- 12 |
| 1470221-1 | 10-1- 19 |
| 1470222-1 | 10-1- 20 |
| 1470222-1 | 10-1- 31 |
| 1488-4 | 2-11- 31 |
| 1488-4 | 2-12- 73 |
| 15-835-3 | 5-5- 7 |
| 150-0038-00 | 10-1- 60 |
| 1511005-1 | 2-10- 7 |
| 1511005-1 | 2-19- 52 |
| 1512602-2 | 2-7- 28 |
| 1512602-4 | 2-7- 27 |
| 1512602-6 | 2-7- 29 |
| 1512605-1 | 7-6- 16 |
| 1512606-2 | 2-3E- 20 |
| 1512606-5 | 2-3E- 21 |
| 1512607-1 | 6-12- |
| 1512607-2 | 6-12- 11 |
| 1513627-1 | 9-4- 70 |
| 1513629-1 | 2-4- 26 |
| 1513629-1 | 3-6- 28 |
| 1513629-1 | 5-8-23A |
| 1513629-2 | 2-5- 52 |
| 1513629-2 | 5-8-52A |
| 1513629-6 | 6-12- 4 |
| 1513630-1 | 2-5- 55 |
| 1513631-1 | 2-6- 37 |
| 1513631-1 | 2-19- 26 |
| 1513633-1 | 7-6- 3 |
| 1513634-1 | 7-6- |
| 1513634-2 | 7-6- 6 |
| 1513634-3 | 7-6- 7 |
| 1513635-1 | 2-4- 24 |
| 1513635-1 | 3-6- 31 |
| 1513635-1 | 5-8-24A |
| 1513635-1 | 5-8-52B |
| 1513635-6 | 6-12- 7 |
| 1513637-1 | 2-6- 39 |
| 1513642-1 | 2-12- 23 |
| 1513643-1 | 2-12- 26 |
| 1513644-1 | 5-7- 50 |
| 1513645-1 | 5-7- 53 |
| 1553003-10 | 2-4- 23 |
| 1570000-223 | 2-9- 71 |
| 1570001-210 | 2-19- 44 |
| 1570001-240 | 4-1- |
| 1570001-240 | 9-1- |
| 1570001-245 | 9-1- 85 |
| 1570001-246 | 9-1- 86 |

| PART NUMBER | FIGURE AND INDEX NO. |
|---|---|
| 1570001-246 | 9-1- |
| 1570001-247 | 9-1- 89 |
| 161548 | 2-2- |
| 161548 | 2-2- |
| 17005 | 6-7- |
| 17005 | 6-8- |
| 17005 | 6-9- |
| 17005 | 6-10- |
| 17005 | 6-11- |
| 17005 | 6-12- |
| 17013 | 6-7- |
| 17013 | 6-8- |
| 17013 | 6-9- |
| 17013 | 6-10- |
| 17013 | 6-11- |
| 17013 | 6-12- |
| 17985 | 1-3- 34 |
| 17985 | 2-6- 52 |
| 1800 | 1-3- 29 |
| 18000 | 2-6- 47 |
| 18637 | 1-3- 42 |
| 18637 | 2-6- 54 |
| 18637-0000 | 2-19- 43 |
| 19050 | 1-3- 22 |
| 19050 | 2-6- 40 |
| 1910-E | 9-1- 88 |
| 1910-E | 9-1- |
| 201D | 4-1- 1 |
| 21A-GP-P | 5-4- |
| 21A-GP-P | 5-4- |
| 2104 | 2-13- 72 |
| 2104 | 2-14- 71 |
| 2104 | 2-15- 61 |
| 2104 | 2-16- 32 |
| 2104 | 2-17- 32 |
| 2104 | 2-18- 80 |
| 21650 | 1-3- 5 |
| 21650 | 2-6- 9 |
| 21650 | 2-19- 8 |
| 22653-718LR3 | 5-3- |
| 22653-718LR3 | 5-4- |
| 22653-718LR3 | 5-6- |
| 2321E | 4-1- 3 |
| 235-86 | 6-7- 83 |
| 235-86 | 6-8- 97 |
| 235-86 | 6-9- 73 |
| 235-86 | 6-10- 66 |
| 235-86 | 6-11- 65 |
| 24650 | 1-2- 1 |
| 24650-1000 | 2-5- 1 |
| 24660 | 1-2- 15 |
| 24660 | 1-4- 3 |
| 24660 | 2-5- 13 |
| 24660 | 2-7- 13 |
| 24810-1100 | 8-4- 21 |
| 24900 | 1-1- 4 |
| 24900 | 1-2- 6 |
| 24900 | 1-2- 16 |
| 24900 | 1-4- 4 |
| 24900 | 1-4- 11 |
| 24900 | 2-4- 8 |
| 24900 | 2-5- 8 |
| 24900 | 2-5- 14 |
| 24900 | 2-7- 8 |
| 24900 | 2-7- 14 |
| 25400 | 1-3- 1 |
| 25400-1000 | 2-6- 1 |
| 25400-1300 | 2-6- 2 |
| 26-4200-16S | 4-1- |
| 26-4200-16S | 7-2- |
| 26-4200-16S | 7-4- |
| 26-4200-16S | 7-5- |
| 26360-0000 | 2-3- 24 |
| 26360-0000 | 2-3A- 24 |
| 26360-0000 | 2-3B- 28 |

| PART NUMBER | FIGURE AND INDEX NO. |
|---|---|
| 26360-0000 | 2-3C- 25 |
| 26360-0000 | 2-3D- 25 |
| 26360-0000 | 2-13- 8 |
| 26360-0000 | 2-13- 38 |
| 26360-0000 | 2-14- 6 |
| 26360-0000 | 2-14- 38 |
| 26360-0000 | 2-15- 6 |
| 26360-0000 | 2-15- 29 |
| 26360-0000 | 2-16- 6 |
| 26360-0000 | 2-16- 23 |
| 26360-0000 | 2-17- 6 |
| 26360-0000 | 2-17- 23 |
| 26780 | 1-1- |
| 26780 | 1-2- |
| 26780 | 1-3- |
| 26780 | 1-4- |
| 26780 | 2-4- |
| 26780 | 2-5- |
| 26780 | 2-6- |
| 26780 | 2-7- |
| 26790 | 1-1- |
| 26790 | 1-2- |
| 26790 | 1-3- |
| 26790 | 1-4- |
| 26790 | 2-4- |
| 26790 | 2-5- |
| 26790 | 2-6- |
| 26790 | 2-7- |
| 26795 | 1-3- |
| 26795 | 2-6- |
| 26795 | 2-19- |
| 26960-0014 | 1-3- 4 |
| 26960-0014 | 2-6- 7 |
| 26960-0028 | 1-3- |
| 26960-0028 | 2-6- 8 |
| 27470 | 1-3- 3 |
| 27470 | 2-6- 6 |
| 27490 | 1-2- 2 |
| 27490 | 2-5- 3 |
| 27500 | 1-3- 2 |
| 27500 | 2-6- 5 |
| 27510 | 1-4- 2 |
| 27510 | 2-7- 3 |
| 27591 | 1-1- |
| 27591 | 1-2- |
| 27591 | 1-3- |
| 27591 | 1-4- |
| 27591 | 2-4- |
| 27591 | 2-5- |
| 27591 | 2-6- |
| 27591 | 2-7- |
| 27594 | 1-1- |
| 27594 | 1-2- |
| 27594 | 1-3- |
| 27594 | 1-4- |
| 27594 | 2-4- |
| 27594 | 2-5- |
| 27594 | 2-6- |
| 27594 | 2-7- |
| 27825 | 1-2- |
| 27825 | 1-4- |
| 27825 | 2-7- |
| 27827 | 1-2- |
| 27859 | 2-6- |
| 27873 | 1-3- |
| 27881 | 1-3- |
| 27881 | 2-6- |
| 27881 | 2-19- |
| 28300-0014 | 2-7- 4 |
| 28300-0028 | 2-7- 5 |
| 28310 | 1-4- 1 |
| 28310-1000 | 2-7- 1 |
| 28326-0009 | 2-3- |
| 28326-0009 | 2-3- |
| 28336 | 2-3- |

| PART NUMBER | FIGURE AND INDEX NO. |
|---|---|
| 28340-1200 | 2-1- 1 |
| 28340-1300 | 2-1- |
| 28340-1400 | 2-1- |
| 28340-1500 | 2-1- |
| 28340-1500 | 2-10- 1 |
| 28360 | 2-1- 4 |
| 28371-0007 | 2-12- |
| 28371-0009 | 2-9- |
| 28371-0009 | 2-9- |
| 28371-0009 | 2-9- 77 |
| 28371-009 | 2-9- 65 |
| 28410 | 1-1- 1 |
| 28410-1000 | 2-4- 1 |
| 28420-0014 | 1-1- 2 |
| 28420-0014 | 2-4- 4 |
| 28420-0028 | 1-1- 3 |
| 28420-0028 | 2-4- 5 |
| 28460 | 2-3- |
| 28490-0014 | 1-2- 3 |
| 28490-0014 | 2-5- 4 |
| 28490-0028 | 1-2- 4 |
| 28490-0028 | 2-5- 5 |
| 28505-0009 | 2-3- |
| 28808 | 1-1- |
| 28808 | 2-4- |
| 28822 | 1-4- |
| 28822 | 2-7- |
| 2887-1214 | 2-3C- 53 |
| 2887-1214 | 2-3D- 35 |
| 28870-1214 | 2-3A- 52 |
| 28870-1214 | 2-3B- 56 |
| 28870-1228 | 2-3E- 43 |
| 28900 | 2-3A- 53 |
| 28900 | 2-3B- 57 |
| 28900 | 2-3C- 54 |
| 28900 | 2-3D- 36 |
| 28900 | 2-3E- 44 |
| 29224 | 2-1- |
| 29225 | 2-1- |
| 29280-1014 | 2-1- 2 |
| 29280-1028 | 2-1- |
| 29346 | 2-1- |
| 29360-0028 | 2-2- |
| 29360-0028 | 2-2- |
| 29360-1014 | 2-2- 1 |
| 29360-1014 | 2-2- 51 |
| 29370-0014 | 2-2- 8 |
| 29370-0014 | 2-2- 53 |
| 29370-0028 | 2-2- |
| 29370-0028 | 2-2- |
| 29510-0000 | 2-3E- 24 |
| 29510-0000 | 2-18- 9 |
| 29510-0400 | 2-18- 33 |
| 29520 | 2-3E- 7 |
| 29687-1000 | 2-1- 15 |
| 29747-0018 | 2-11- 28 |
| 29747-0018 | 2-12- 72 |
| 29747-0034 | 2-12- |
| 29752 | 2-11- 30 |
| 29752 | 2-12- |
| 29752 | 2-12- 70 |
| 29753 | 2-2- |
| 29753 | 2-11- 29 |
| 29753 | 2-12- 65 |
| 29950-1000 | 2-2- 2 |
| 29950-1000 | 2-2- 52 |
| 30D192A1 | 7-4- 38 |
| 30D192A1 | 6-1- 39 |
| 30D192A1 | 6-2- 13 |
| 30D192A1 | 6-3- 41 |
| 30D192A1 | 6-4- 16 |
| 30D192A1 | 6-5- 34 |
| 30D192A1 | 6-6- 11 |
| 30D192A1 | 7-2- 43 |
| 30D192A1 | 7-3- 39 |

| PART NUMBER | FIGURE AND INDEX NO. |
|---|---|
| 30D192A6 | 6-8- |
| 30D192A6 | 6-9- |
| 30D192A6 | 6-10- |
| 30D192A6 | 6-11- |
| 30178 | 2-1- 23 |
| 30293 | 2-2- 3 |
| 30293 | 2-2- |
| 30340-1114 | 2-3- 1 |
| 30340-1114 | 2-3A- 1 |
| 30340-1114 | 2-3B- 1 |
| 30340-1114 | 2-3C- 1 |
| 30340-1114 | 2-3D- 1 |
| 30340-1128 | 2-3E- 1 |
| 30370-0100 | 2-3A- 57 |
| 30370-0100 | 2-3B- 61 |
| 30370-0100 | 2-3C- 58 |
| 30370-0100 | 2-3D- 40 |
| 30370-0100 | 2-3E- 47 |
| 30370-0100 | 2-13- 86 |
| 30370-0100 | 2-14- 68 |
| 30370-0100 | 2-14- 73 |
| 30370-0100 | 2-15- 63 |
| 30370-0100 | 2-16- 34 |
| 30370-0100 | 2-17- 34 |
| 30370-0100 | 2-18- 73 |
| 30410-1014 | 2-8- |
| 30410-1014 | 2-8- |
| 30410-1028 | 2-8- |
| 30410-1028 | 2-8- |
| 30410-1114 | 2-8- |
| 30410-1114 | 2-8- |
| 30410-1128 | 2-8- |
| 30410-1128 | 2-8- |
| 30410-1214 | 2-8- |
| 30410-1214 | 2-8- |
| 30410-1228 | 2-8- |
| 30410-1228 | 2-8- |
| 30410-1314 | 2-8- |
| 30410-1314 | 2-8- |
| 30410-1328 | 2-8- |
| 30410-1328 | 2-8- |
| 30420 | 2-8- 3 |
| 30420 | 2-8- 41 |
| 30475-0000 | 2-13- 68 |
| 30475-0000 | 2-16- 30 |
| 30475-0000 | 2-17- 30 |
| 30475-0000 | 2-18- 74 |
| 30475-0100 | 2-15- 58 |
| 30510-1114 | 2-13- 1 |
| 30510-1114 | 2-14- 1 |
| 30510-1114 | 2-15- 1 |
| 30510-1114 | 2-16- 1 |
| 30510-1114 | 2-17- 1 |
| 30510-1128 | 2-18- 1 |
| 30520-0014 | 2-13- 35 |
| 30520-0014 | 2-14- 26 |
| 30520-0014 | 2-15- 9 |
| 30520-0014 | 2-16- 19 |
| 30520-0014 | 2-17- 19 |
| 30520-0028 | 2-18- 58 |
| 30740 | 2-12- 16 |
| 31240-0014 | 2-9- 1 |
| 31240-0028 | 2-9- 2 |
| 31360-0014 | 1-4- 9 |
| 31360-0014 | 2-7- 6 |
| 31360-0028 | 1-4- 10 |
| 31360-0028 | 2-7- 7 |
| 31380-1000 | 2-12- 1 |
| 31390-1114 | 2-11- 1 |
| 31390-1128 | 2-11- 2 |
| 31396 | 2-11- 33 |
| 31396 | 2-12- 75 |
| 31398 | 2-11- 32 |
| 31398 | 2-12- 74 |
| 31630-0014 | 2-5- 6 |

| PART NUMBER | FIGURE AND INDEX NO. |
|---|---|
| 31630-0028 | 2-5- 7 |
| 31640 | 2-8- 38 |
| 31640 | 2-8- 58 |
| 320733 | 9-1- |
| 320733 | 9-1- |
| 32338 | 7-5- 10 |
| 32338 | 7-6- 5 |
| 32350 | 2-12- 48 |
| 32380-0014 | 2-4- 6 |
| 32380-0028 | 2-4- 7 |
| 32570 | 2-8- |
| 32570 | 2-8- |
| 32580-1114 | 2-8- |
| 32580-1114 | 2-8- |
| 32580-1128 | 2-8- |
| 32580-1128 | 2-8- |
| 32580-1314 | 2-8- |
| 32580-1314 | 2-8- |
| 32580-1328 | 2-8- |
| 32580-1328 | 2-8- |
| 32580-1614 | 2-8- |
| 32580-1614 | 2-8- |
| 32580-1628 | 2-8- |
| 32580-1628 | 2-8- |
| 32680-0000 | 2-10- 12 |
| 328 | 3-4- 7 |
| 32800-1014 | 2-10- 3 |
| 32800-1128 | 2-10- |
| 32802-1014 | 2-10- 5 |
| 32802-1028 | 2-10- 4 |
| 32802-1128 | 2-10- 2 |
| 32803 | 2-10- 10 |
| 32803 | 2-19- 45 |
| 32805-0002 | 2-10- |
| 32880-0014 | 2-12- 14 |
| 32880-0028 | 2-12- 15 |
| 32880-1100 | 2-10- 6 |
| 32980-0014 | 2-12- 12 |
| 32980-0028 | 2-12- 13 |
| 33200-1000 | 2-4- 2 |
| 33210-1000 | 2-7- 2 |
| 33220-1000 | 2-5- 2 |
| 33230-1000 | 2-6- 3 |
| 33230-1000 | 2-19- 1 |
| 33230-1200 | 2-6- 4 |
| 33230-1200 | 2-19- 2 |
| 33370 | 2-4- |
| 33370 | 2-5- |
| 33370 | 2-6- |
| 33370 | 2-7- |
| 33370 | 2-19- 3 |
| 33488-0001 | 2-19- 41 |
| 33550 | 2-19- 4 |
| 33580-1000 | 2-4- 3 |
| 338-4032 | 2-11- 34 |
| 338-4032 | 2-12- 76 |
| 33827 | 2-10- 11 |
| 33827 | 2-19- 46 |
| 33890-1000 | 2-19- 47 |
| 33979 | 2-19- |
| 34110-1000 | 2-7- 2A |
| 34640-1114 | 2-8- |
| 34640-1114 | 2-8- |
| 34640-1128 | 2-8- |
| 34640-1128 | 2-8- |
| 34660-0014 | 2-19- 6 |
| 34660-0028 | 2-19- 7 |
| 34710-1014 | 2-8- |
| 34710-1014 | 2-8- |
| 382-32062 | 9-4- 44 |
| 39001 | 6-1- 28 |
| 39001 | 6-2- 3 |
| 39001 | 6-3- 13 |
| 39001 | 6-4- 10 |
| 39001 | 6-5- 6 |
| 39001 | 6-6- 3 |

| PART NUMBER | FIGURE AND INDEX NO. |
|---|---|
| 39001 | 6-7- 15 |
| 39001 | 6-7- 49 |
| 39001 | 6-8- 28 |
| 39001 | 6-8- 61 |
| 39001 | 6-9- 13 |
| 39001 | 6-9- 40 |
| 39001 | 6-10- 12 |
| 39001 | 6-10- 50 |
| 39001 | 6-11- 9 |
| 39001 | 6-11- 33 |
| 39002 | 6-1- 36 |
| 39002 | 6-2- 10 |
| 39002 | 6-3- 39 |
| 39002 | 6-4- 14 |
| 39002 | 6-5- 31 |
| 39002 | 6-6- 7 |
| 39031 | 6-12- 10 |
| 39032 | 6-7- 1 |
| 39032 | 6-8- 1 |
| 39032 | 6-9- 1 |
| 39032 | 6-10- 1 |
| 39032 | 6-11- 1 |
| 39033 | 6-7- 2 |
| 39033 | 6-8- 2 |
| 39033 | 6-9- 2 |
| 39033 | 6-10- 2 |
| 39033 | 6-11- 2 |
| 39034 | 6-12- 1 |
| 39035 | 6-12- 2 |
| 3906-1 | 6-1- |
| 3906-1 | 6-2- |
| 3906-1 | 6-3- |
| 3906-1 | 6-4- |
| 3906-1 | 6-5- |
| 3906-1 | 6-6- |
| 40 OHM 3 WATT | 1-2- |
| 40 OHM 3 WATT | 2-5- |
| 40 OHM 3W | 2-9- 16 |
| 40 OHM 3W | 2-9- 39 |
| 40 OHM 3W | 2-9- |
| 40 OHM 3W | 2-9- |
| 40-S-252 | 10-5- 13 |
| 41152-1 | 5-9- |
| 41223-2 | 5-3- |
| 41223-2 | 5-3- |
| 41228-5 | 5-7- |
| 41228-5 | 5-7- |
| 41238-2 | 5-9- |
| 41240-101 | 5-3- |
| 41240-101 | 5-3- |
| 41246-1 | 5-7- |
| 41246-1 | 5-7- |
| 41246-1 | 5-7- 49 |
| 41247-101 | 5-7- |
| 41247-101 | 5-7- |
| 41247-102 | 5-7- |
| 463 | 8-4- 7 |
| 463 | 8-5- 4 |
| 463 | 8-5- 13 |
| 463 | 8-6- 9 |
| 463 | 8-6- 18 |
| 470 OHM 1/2W | 2-9- |
| 5 OHM 10 W | 9-1- 83 |
| 5 OHM 10 W | 9-1- |
| 5 OHM 10W | 4-1- |
| 5 OHM 5 WATT | 9-1- |
| 5 OHM 5 WATT | 9-1- |
| 5 OHM 5 WATT | 9-1- |
| 50310 | 2-1- 29 |
| 50320 | 2-3- 6 |
| 50320 | 2-3A- 5 |
| 50320 | 2-3B- 9 |
| 50320 | 2-3C- 6 |
| 50320 | 2-3D- 6 |
| 50328-0002 | 2-3- |

| PART NUMBER | FIGURE AND INDEX NO. |
|---|---|
| 510 OHM 1/2W 5% | 5-7- |
| 510 OHM 1/2W 5% | 5-7- |
| 510 OHM 1/2W 5% | 5-7- |
| 5134-1 DM | 1-4- |
| 5134-1 DM | 2-7- |
| 52085-101 | 5-8- |
| 52085-101 | 5-8- |
| 54830-101 | 5-6- 3 |
| 54830-102 | 5-4- 11 |
| 54830-102 | 5-4- 67 |
| 54830-102 | 5-9- 4 |
| 551A | 4-1- 2 |
| 55269-102 | 5-7- 2 |
| 5930 1/2 | 8-5- 12 |
| 601-2104-12 | 9-1- |
| 601-2104-12 | 9-1- |
| 62B102-01 | 4-1- 7 |
| 6517 | 9-4- |
| 6529 | 9-4- 16 |
| 71159 | 5-6- 21 |
| 716144 | 4-1- 14 |
| 7751 | 5-3- |
| 7751 | 5-4- |
| 7751 | 5-6- |
| 7754 | 5-3- |
| 7754 | 5-4- |
| 7754 | 5-6- |
| 8001-1 TNC | 1-2- |
| 8001-1 TNC | 1-4- |
| 8001-1 TNC | 2-5- |
| 8001-1 TNC | 2-7- |
| 8002-1 TNC | 1-2- |
| 8002-1 TNC | 1-4- |
| 8002-1 TNC | 2-5- |
| 8002-1 TNC | 2-7- |
| 8019-1 TNC | 1-2- |
| 8019-1 TNC | 1-2- |
| 8019-1 TNC | 1-2- |
| 8019-1 TNC | 1-4- |
| 8019-1 TNC | 1-4- |
| 8019-1 TNC | 1-4- |
| 8019-1 TNC | 2-5- |
| 8019-1 TNC | 2-5- |
| 8019-1 TNC | 2-5- |
| 8019-1 TNC | 2-7- |
| 8019-1 TNC | 2-7- |
| 8019-1 TNC | 2-7- |
| 81F | 9-1- 21 |
| 8160-1 TNC | 2-7- |
| 82 OHM 2W | 2-9- |
| 85075 | 1-3- |
| 85075 | 2-6- |
| 86-PF11 | 5-1- |
| 86-PF11 | 5-1- |
| 86-PM11 | 5-1- |
| 86-PM11 | 5-1- |
| 8816K9 | 9-1- 34 |
| 8825K6 | 9-1- 41 |
| 8866K1 | 2-2- 76 |
| 8866K1 | 2-9- 75 |
| 8866K1 | 9-1- 45 |
| 8866K1 | 5-9- 13 |
| 8867K1 | 2-9- 76 |
| 8867K1 | 3-4- 8 |
| 8867K1 | 5-5- 6 |
| 8867K4 | 2-2- 75 |
| 8867K4 | 9-1- 44 |
| 8899 | 6-12- 14 |
| 90603-16 | 5-4- 46 |
| 90603-16 | 5-9- |
| 90603-60 | 5-4- 45 |
| 90609-60 | 5-4- 47 |
| 90609-60 | 5-4- 55 |
| 91-MPF6S | 5-1- |
| 91-MPF6S | 5-2- |
| 94B016-01 | 10-5- 5 |

# APPENDIX I

# MODIFICATIONS REQUIRED FOR REPLACEMENT OF DISCONTINUED RADIOS

TABLE OF CONTENTS


| Figure | | Page |
|---|---|---|
| 1 | Replacement of the DV-317A-1 Dynaverter with the DV-317B-1 Dynaverter | 2 |
| 2 | Replacement of the DV-319A Dynaverter with the DV-319B Dynaverter | 3 |
| 3 | Replacement of DV-302A Dynaverter with the DV-302B Dynaverter | 4 |

MODIFICATIONS REQUIRED TO INSTALL DV-317B-1
IN PLACE OF EXISTING DV-317A-1.

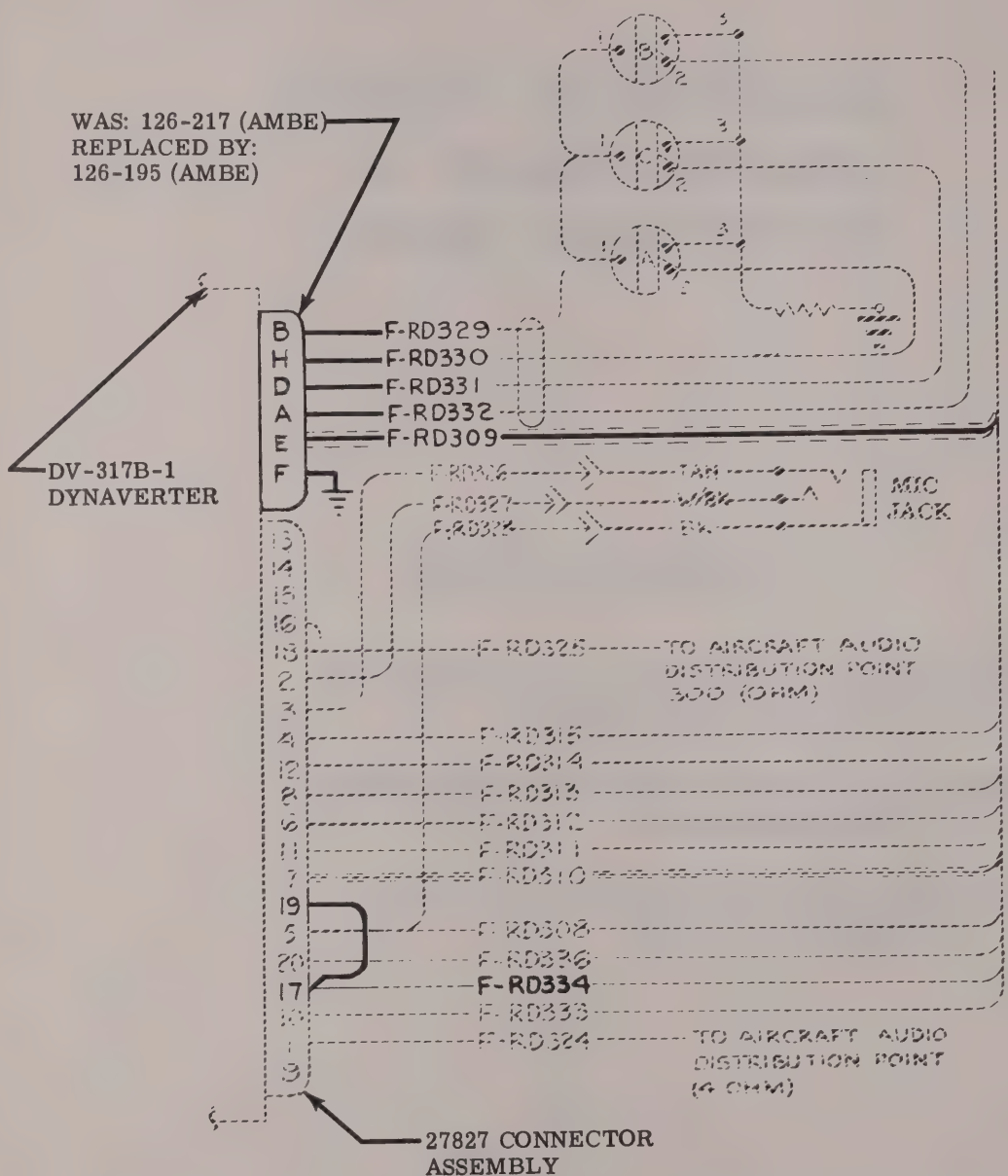


The following modifications are required to install the DV-317B-1 Dynaverter in place of the DV-317A-1 Dynaverter:

(1) Remove the Amphenol 126-217 connector (smaller of the two) from the end of the harness assembly.
(2) Remove shielded wire F-RD309 from pin 19 of the larger plug.
(3) Install an Amphenol 126-195 connector in place of the removed one. Solder wire F-RD309 to pin E. Solder a ground lead to pin F as shown.
(4) Terminate the ground lead and connect to nearest good airframe ground.
(5) Solder one end of a jumper to pin 19 of the large connector.
(6) Solder free end of jumper to pin 17 along with wire F-RD334 which already occupies pin 17.

Figure 1. Replacement of the DV-317A-1 Dynaverter with the DV-317B-1 Dynaverter.

MODIFICATIONS REQUIRED TO INSTALL DV-319B
IN PLACE OF EXISTING DV-319A.

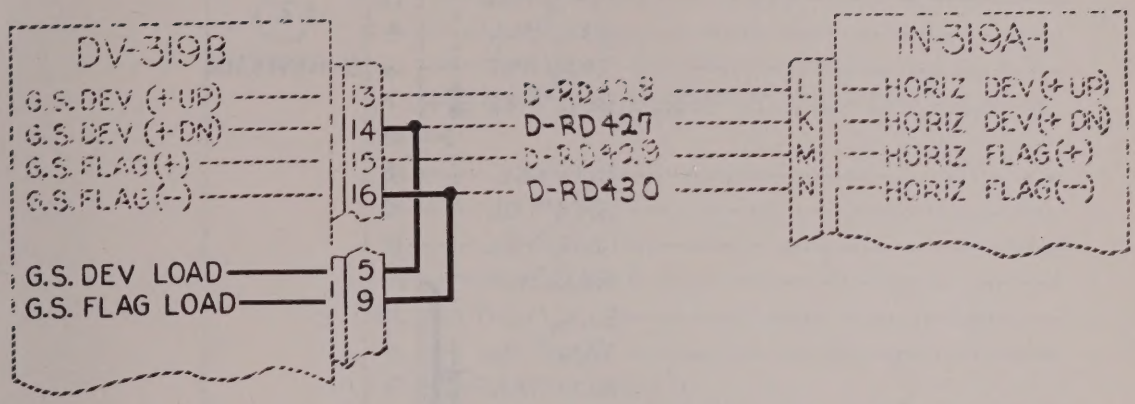


The following modifications are required to install the DV-319B Dynaverter in place of the DV-319A Dynaverter:

(1) Solder one end of a jumper wire to pin 5 of the Dynaverter harness connector.
(2) Solder free end of jumper to pin 14 along with wire D-RD427 which already occupies pin 14.
(3) Solder one end of a jumper wire to pin 9 of the Dynaverter harness connector.
(4) Solder free end of jumper to pin 16 along with wire D-RD430 which already occupies pin 16.

Figure 2. Replacement of the DV-319A Dynaverter with the DV-319B Dynaverter.

MODIFICATIONS REQUIRED TO INSTALL DV-302B
IN PLACE OF EXISTING DV-302A

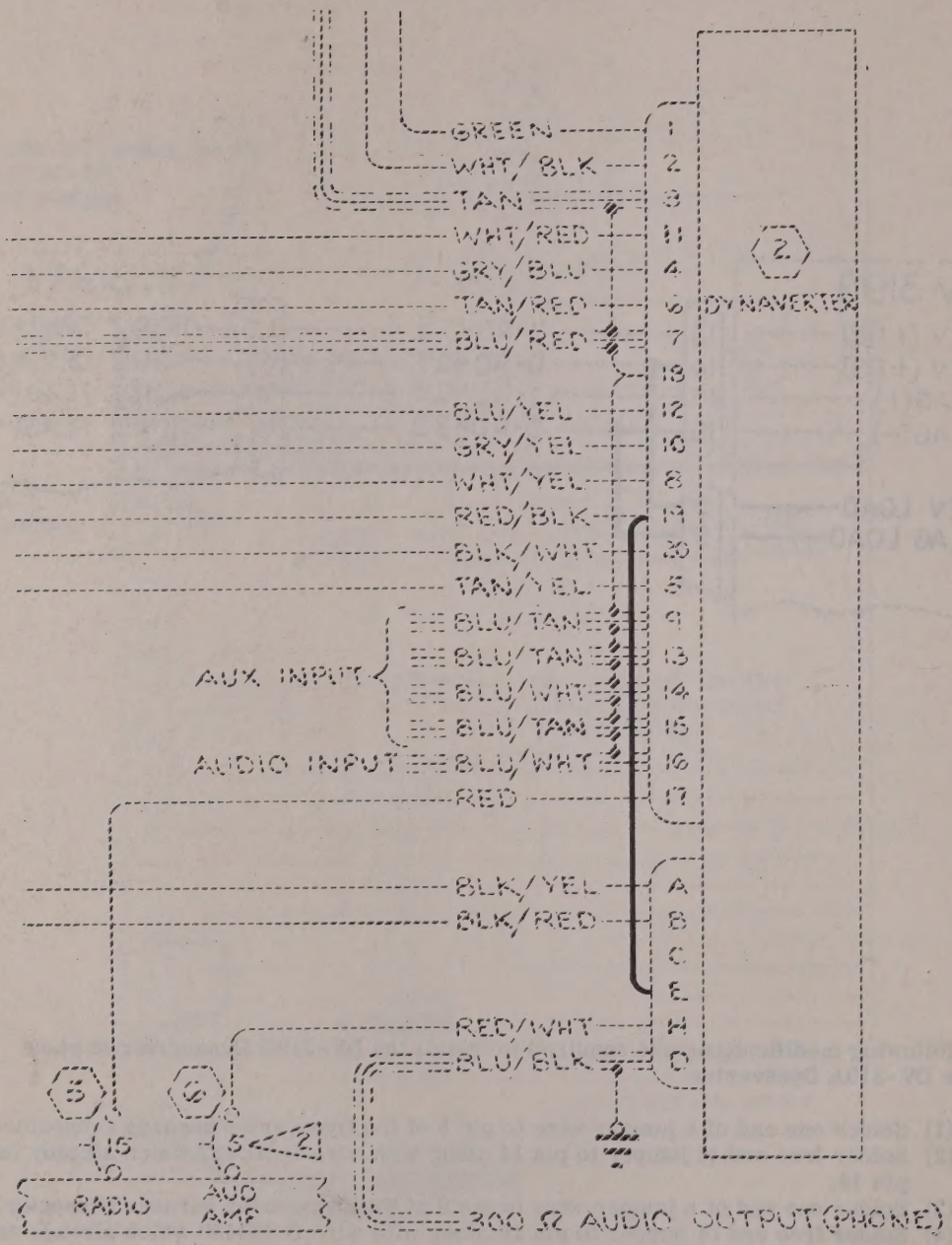


The following modifications are required to install the DV-302B Dynaverter in place of the DV-302A Dynaverter:

(1) Solder one end of a jumper wire to pin 19 of the Dynaverter harness connector and then solder free end of jumper to pin E of Dynaverter harness connector.

Figure 3. Replacement of DV-302A Dynaverter with the DV-302B Dynaverter

"TAKE YOUR CESSNA HOME
FOR SERVICE AT THE SIGN
OF THE CESSNA SHIELD"

CESSNA AIRCRAFT COMPANY

WICHITA, KANSAS